the future of southern california

Murrieta

General Plan Update

Appendix C:

Traffic and Impact Analysis

City of Murrieta General Plan Update
Traffic Impact Analysis

Submitted by:

ITERIS

Submitted to:

RBF Consulting

September 8, 2011

16J09-1636

DOCUMENT VERSION CONTROL

Comment	Date	Version No.
Draft for Review	January 10, 2011	1.00
Comments Incorporated	January 28,2011	1.01
Additional Comments Incorporated	February 2, 2011	1.02
Final Document	September 8, 2011	1.10

TABLE OF CONTENTS

Document Version Control i

Table of Contents ii

Appendices iii

LIst of Tables iv

List of Figures v

1.0 Introduction 1

1.1 PURPOSE OF THE REPORT AND STUDY OBJECTIVES 1

2.0 General Methodology 2

2.1 FORECAST METHODOLOGY 2

2.1.1 Subdivision of Traffic Analysis Zones 2

2.1.2 Highway and Transit Network Development 6

2.1.3 Trip Generation 8

2.1.4 Trip Distribution, Mode Split and Trip Assignment 8

2.1.5 Traffic Assignment Validation 9

2.1.6 Traffic Volume Post-Processing 10

2.2 STUDY INTERSECTIONS 10

2.3 ROADWAY LOS VOLUME-TO-CAPACITY (V/C) RATIOS 13

2.4 INTERSECTION LEVEL OF SERVICE (LOS) CRITERIA 14

3.0 Existing Conditions Analysis 16

3.1 ROADWAY SEGMENTS 16

3.2 INTERSECTIONS 19

4.0 Buildout Conditions Analysis 24

4.1 EXISTING GENERAL PLAN BUILDOUT SCENARIO 31

4.1.1 Roadway LOS Without Whitewood Road Extension 31

4.1.2 Roadway LOS With Whitewood Road Extension 34

4.1.3 Intersection LOS 37

4.2 RECOMMENDED SCENARIO (PROPOSED GENERAL PLAN LAND USES) 40

4.2.1 Roadway LOS 40

4.2.2 Intersection LOS 43

4.3 SCENARIO B (GENERAL PLAN LAND USE ALTERNATIVE) 46

4.3.1 Roadway LOS 46

4.3.2 Intersection LOS 50

5.0 Recommended Scenario Roadway Improvements 53

5.1.1 Roadway Improvements 53

5.1.2 Intersection Improvements 54

APPENDICES

APPENDIX A:
TRAFFIC COUNTS

APPENDIX B:
LEVEL OF SERVICE CALCULATIONS

APPENDIX C:
SED DATA

LIST OF TABLES

Table 1 – Murrieta Model Zone System Structure 3
Table 2 - List of Study Intersections 10
Table 3 – Daily Roadway Capacity Values 13
Table 4 – Roadway Segment Level of Service Criteria 14
Table 5 – Signalized Intersection Level of Service Criteria 15
Table 6 – Unsignalized Intersection Level of Service Criteria 15
Table 7 - List of Study Intersections 19
Table 8 – Existing Level of Service 23
Table 9 – Socioeconomic Data (SED) Summary 25
Table 10 – Future Intersection Traffic Control 30
Table 11 – Existing General Plan Buildout Level of Service 39
Table 12 – Recommended Scenario Level of Service 45
Table 13 – Scenario B Level of Service 52
Table 14 – Recommended Scenario with Enhanced Geometrics Level of Service 56

LIST OF FIGURES

Figure 1 City of Murrieta Traffic Analysis Zone Locations 4
Figure 2 Four-Tier Zone System in Murrieta Model 5
Figure 3 Existing Highway Network (2008) 7
Figure 4 Study Intersections 12
Figure 5 2008 Average Daily Traffic Volumes 17
Figure 6 2008 Daily Volume-to-Capacity Ratios 18
Figure 7 Existing Lane Configurations 21
Figure 8 Existing Peak Hour Turning Movement Volumes 22
Figure 9 Future Roadway Lanes 27
Figure 10 Existing General Plan Buildout Lane Configurations 29
Figure 11 2035 Average Daily Traffic Volumes – Existing General Plan Without Whitewood Road Extension 32
Figure 12 2035 Daily Volume-to-Capacity Ratios – Existing General Plan Without Whitewood Road Extension 33
Figure 13 2035 Average Daily Traffic Volumes – Existing General Plan With Whitewood Road Extension 35
Figure 14 2035 Daily Volume-to-Capacity Ratios – Existing General Plan With Whitewood Road Extension 36
Figure 15 2035 Peak Hour Turning Movement Volumes – Existing General Plan 38
Figure 16 2035 Average Daily Traffic Volumes – Recommended Scenario 41
Figure 17 2035 Daily Volume-to-Capacity Ratios – Recommended Scenario 42
Figure 18 2035 Peak Hour Turning Movement Volumes – Recommended Scenario 44
Figure 19 2035 Average Daily Traffic Volumes – Scenario B 48
Figure 20 2035 Daily Volume-to-Capacity Ratios – Scenario B 49
Figure 21 2035 Peak Hour Turning Movement Volumes – Scenario B 51
Figure 22 Enhanced Intersection Lane Configurations 55
Figure 23 Proposed Circulation Element 61

1.0 INTRODUCTION

1.1 PURPOSE OF THE REPORT AND STUDY OBJECTIVES

The main purposes for this traffic impact analysis of the update of the City of Murrieta General Plan were to access the transportation impacts of the following:

1. Existing Conditions;
2. Buildout of the current General Plan land uses;
3. Buildout of the Recommended Scenario land use plan;
4. Buildout of the Scenario B land use plan.

The analysis used buildout (2035) land uses in the regional area, and as part of the study, daily and peak hour volumes were developed in order to assess potential traffic impacts to roadways and intersections in Murrieta.

The study also recommends improvements to roadway links and intersections in order to meet City policies regarding levels of service (LOS). These have been incorporated into the proposed Draft Circulation Plan.

2.0 GENERAL METHODOLOGY

Traffic volumes used in the study were developed through the use of a travel demand model, which is specific to the City of Murrieta, and consistent with the Riverside County Traffic Analysis Model (RivTAM), and the Southern California Association of Governments (SCAG) travel demand model.

The development of the Murrieta focused travel demand model is based on the Year 2008 Riverside Traffic Analysis Model (RivTAM) in TransCAD platform. The purpose for the development of this focused and detailed model is for use in General Plan traffic forecasting. The Murrieta focused model covers all of the six counties in the SCAG region. New zone structure with 925 zones was designed to detail the Murrieta area and to aggregate a set of zones outside of the area. The model roadway network within the City and sphere area was expanded to include roadways classified as Collector and above, as shown in the City of Murrieta General Plan Circulation Element.

The structure of the Murrieta Model is consistent with the RivTAM model to ensure the compatibility between the two models. Building on RivTAM also minimizes the time and effort needed to maintain and update Murrieta as new elements of the RivTAM model are put into the model job stream. Specifically, the model consists of traditional four step modeling process including trip generation, trip distribution, mode split, and traffic assignment. Two model scenarios were included in the Murrieta Model, namely the base year 2009 and the forecast year 2035. Given the updated zone structure, corresponding modifications regarding the input data tables and matrices in the four steps were conducted for both of the model scenarios. The validation for base year 2009 was followed to ensure the results match with the both RivTAM model and traffic counts.

The validated model was then used to forecast future volumes for the different scenarios. Peak hour turning model volumes were developed for study intersections using NCHRP methodology.

2.1 FORECAST METHODOLOGY

Development of the Murrieta Model includes four main steps: 1) subdivision of traffic analysis zones, 2) highway and transit network development, 3) trip generation, and 4) trip distribution, mode split, and trip assignment. These processes are discussed in detail below.

2.1.1 *SUBDIVISION OF TRAFFIC ANALYSIS ZONES*

Traffic Analysis Zones (TAZ) are geographic areas dividing a planning region into relatively similar areas of land use and land activity. Traffic analysis zones in the Murrieta area were determined and established with input from City of Murrieta staff. **Figure 1** shows the Murrieta Model traffic analysis zone boundaries in the City area, with zone numbers indicated.

A focused model is usually developed for a specific area based on the regional model and has a multi-tier zone system. The multi-tier zone system in Murrieta Model was defined as follows:

1. Aggregated TAZ at Combined Statistical Areas (CSA) level
2. Area adjacent to the first tier area (15-20 miles from the study area)
3. Area adjacent to the study area, which covers the next 15 miles buffer outside the study area
4. Murrieta study area with smaller size Traffic Analysis Zones (TAZ)

Figure 2 illustrates the four-tier zone system. Based on the City's zone structure and land use, RivTAM TAZs were further divided into 247 TAZs within the forth tier, with 23 zones being spare zones. Spare zones are reserved zones for probable future use. They currently generate zero trips. The third tier with 203 TAZs kept the same zone structure as the RivTAM mode. The second tier is a more aggregated RivTAM TAZ adjacent to tier 1. The aggregation based on CSA level generated 352 TAZs located in the first tier. Summary of the TAZ statistics in the Murrieta Model is presented in **Table 1**. Accordingly, centroid connectors in all the tiers were rebuilt to match with the new zone system.

TABLE 1 – MURRIETA MODEL ZONE SYSTEM STRUCTURE

Modeling Area	TAZ	
	Number of Zones	Sequence
Imperial County	10	1-10
Los Angeles County	220	11-230
Orange County	34	231-264
Riverside County	532	265-796
San Bernardino Valley	38	797-834
Murrieta (Portion of Riverside County)	(247)	(401-647)
Ventura County	8	835-842
External/Cordon Zones	40	843-882
Airport Zones	12	883-894
Port Zones	31	895-925
Total	***925***	***1-925***

FIGURE 1 CITY OF MURRIETA TRAFFIC ANALYSIS ZONE LOCATIONS

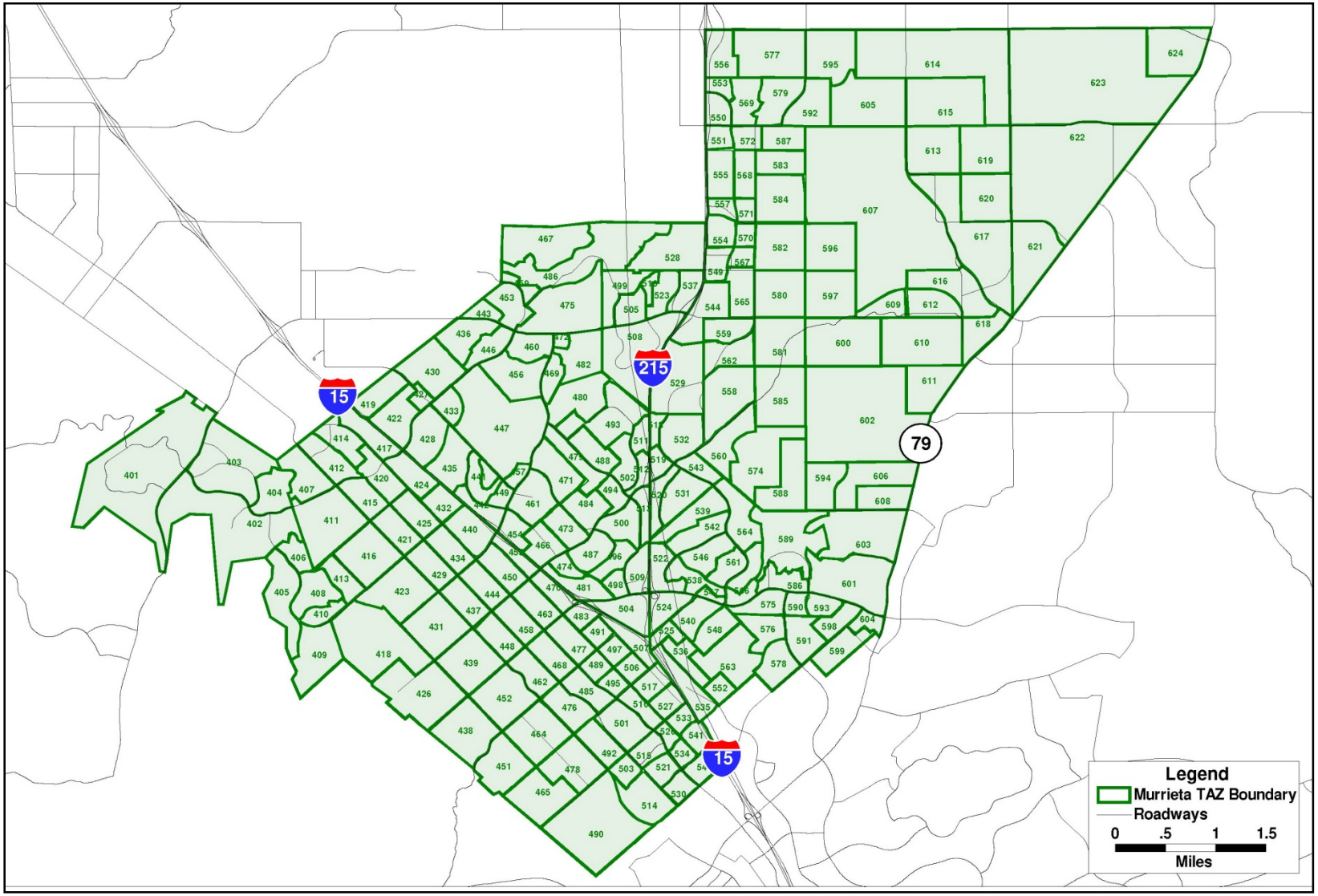

FIGURE 2 FOUR-TIER ZONE SYSTEM IN MURRIETA MODEL

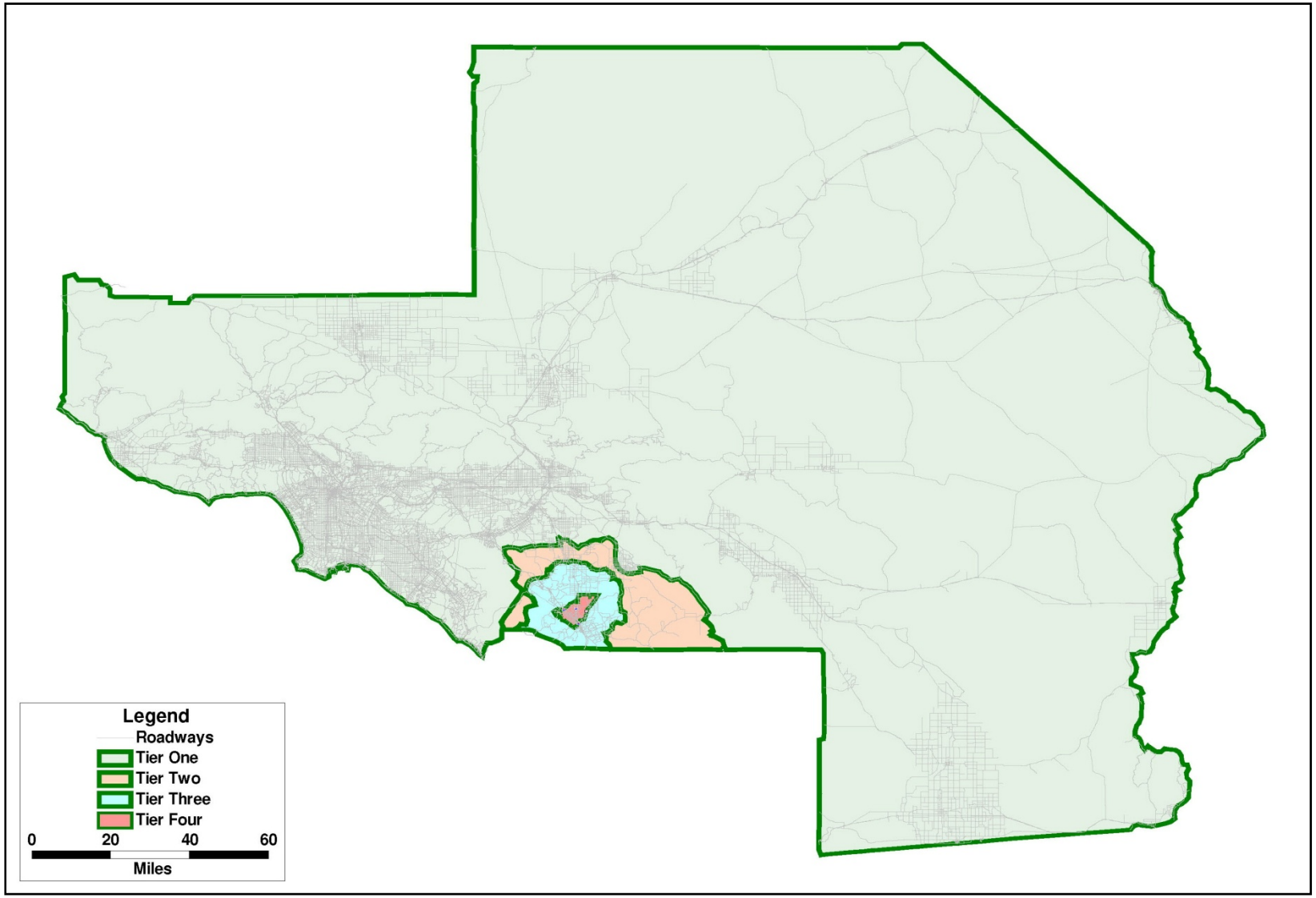

2.1.2 *Highway and Transit Network Development*

Accurate transportation model calibration and validation requires that the transportation highway network represents the same time horizon as the land-use data that is used to estimate travel demand. The RivTAM 2008 Base Year model highway network was used to develop the 2009 Murrieta Model highway network. The highway network was conflated[1] using the network editing features and the GIS capabilities of TransCAD, and was aligned using the roadways street centerline file. Roadway links and new centroid connectors for the new traffic analysis zones were added to the highway network. Generally, all the streets currently existing in the Murrieta General Plan Circulation Element were included in the model network. Local residential streets were generally not included in the network. **Figure 3** shows a snapshot of the Murrieta Model highway network.

Highway network attributes such as speed, functional classification, facility type, capacity, and number of lanes were updated to reflect the existing conditions in the city area. No modifications or changes were made to the RivTAM highway network in the region outside the city.

The existing RivTAM transit network was also modified to ensure its compatibility with the new highway network. Several transit routes were modified to lie on the modified roadway network; however the routes were maintained the same.

[1] Conflating is a process where a stylized network is overlaid on GIS mapping and adjusted to fit the more geographically correct GIS map.

FIGURE 3 EXISTING HIGHWAY NETWORK (2008)

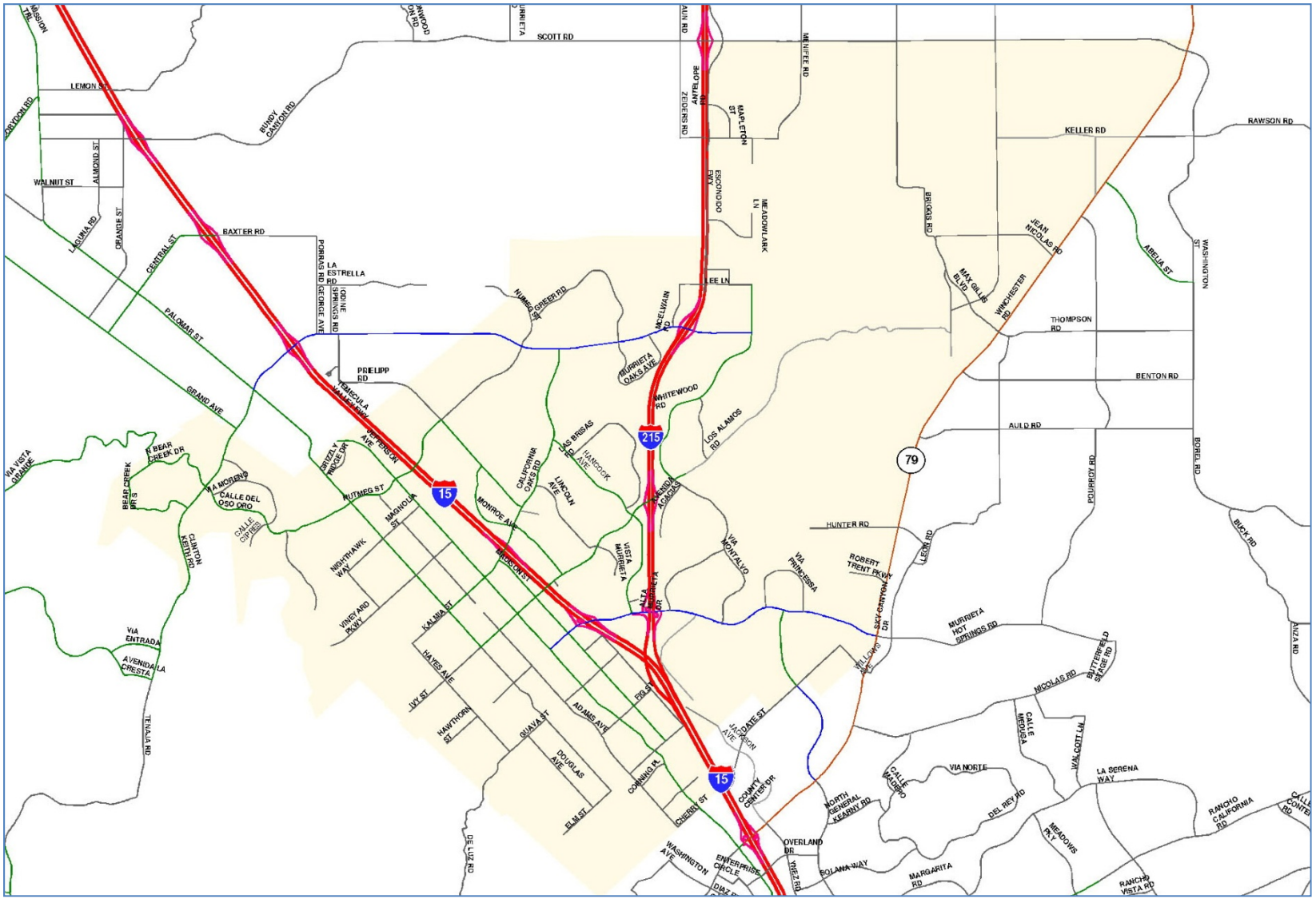

2.1.3 *Trip Generation*

The trip generation model estimates trip-ends for a typical weekday. A production trip end is where a trip begins from the home of the trip maker and an attraction trip-end is where a trip ends. Trip generation models are based on Socio-Economic Data (SED), in which commercial, warehouse and industrial sites are represented in terms of number of employees instead of square-footage or acreage of the development in land use models. Similar to RivTAM, 52 socioeconomic variables describing population, household, school enrollments, household income, workers, and employment were used as the major inputs for the trip generation model.

The SED data for the study area were processed using two approaches due to the data availability.

The City of Murrieta provided the population and employment data for the Murrieta zones, which presented a more refined distribution pattern of population and employment compared with RivTAM model. Therefore, the SED data from the city of Murrieta was converted to RivTAM data format and used as SED input for the Murrieta zones.

For the third tier, no change for the SED data was made since the Murrieta Model kept the same zone system as the RivTAM. As mentioned, the first tier was based on CSA, where a set of zones in SCAG were grouped to one zone. Accordingly, the SED was aggregated into the corresponding new zones.

In addition to SED input, several tables and matrices describing additional demographic characteristics used in trip generation model were also adjusted according to the Murrieta zone system. The detailed description for the input data and methodology of estimating trip production and attraction can refer to the RivTAM model validation report.

2.1.4 *Trip Distribution, Mode Split and Trip Assignment*

The trip distribution process allocates the zonal person trips generated by the trip generation model to movements between zone pairs based on the travel time/cost between the zones. The mode split determines the number of trips taking a variety of travel mode including non-motorized mode, auto mode, and transit mode. The trip assignment model loads trips to the roadway network. Similarly, there was no change in term of model structure and methodologies in these three processes. Note that several related tables and matrices in these three steps were updated according to the new zone system.

Since the City of Murrieta is very close to the San Diego County border, the daily volumes generated by the San Diego cordon station were compared to Caltrans 2008 average daily

counts and were accordingly adjusted in the existing model to generate the correct number of daily trips.

2.1.5 *Traffic Assignment Validation*

The final step in the four step travel demand modeling process is the assignment of the vehicle trip tables to the highway network. The traffic assignment process chooses the specific travel route between zone pairs for any given trip for each of the peak and off-peak time periods. The selection of a particular route is based upon travel times reflecting the traffic volume, roadway capacity and speed relationships. The procedure used in the Murrieta Model is an equilibrium traffic assignment process, whereby the trip table is loaded incrementally to account for capacity restraint and travel time variations that occur when particular network links become congested. The Highway Assignment process is the last and typically the most iterative part of validation/calibration of a travel demand model. To validate the model outputs, base-year ground counts were compared to the modeled traffic volumes on the highway network. The average daily traffic (ADT) volumes for the arterial roadways were obtained from various sources including Caltrans, the City, prior studies, and collecting new counts. The primary source for freeway mainline traffic volume data is Caltrans 2008 count database.

Screenline analysis was used in the validation of trip assignment. Screenlines are imaginary lines drawn across several sections of various roadways to assess the performance of the model by comparing the total model assigned volumes and total actual counts for those roadway sections. All model links (segments) that are crossed by a screenline form a group of roadways within a corridor for which the total model produced volumes and ground traffic counts are aggregated and compared. For the Murrieta model, all screenlines have the assigned volumes within the acceptable industry validation standards and FHWA criteria. The model was also evaluated using the Root Mean Square Error (RMSE) methodology, which is a quadratic scoring rule which measures the average magnitude of the error. It was found that the RMSE for the individual screenlines and the total screenlines is well below the suggested threshold and the model shows good fit with the ground counts. In order to compare the aggregate statistics on the validity of the traffic assignment across all points in the model regardless of specific corridors or screenlines, model predicted vs. counted traffic volumes were compared on model segments with available traffic counts. The model shows good correlation between actual and observed volumes. An analysis of a final measure of comparison for the fit between observed traffic counts and estimated model volumes is the Coefficient of Determination (R^2). The recommended value of R^2 is greater than 0.88. The computed value of R^2 was estimated to be 0.96 for the Murrieta model, which shows that the model performance is within a very reasonable boundary, representing an excellent fit.

2.1.6 *Traffic Volume Post-Processing*

In order to post process the daily link volumes, model growth between the existing and future models was added to the average daily counts, where counts were available. Future forecast traffic volumes for the study intersections were developed using the approach/departure volumes from the Murrieta 2035 Model. The AM and PM peak period forecast traffic volumes were converted to peak hour volumes by applying standard peak hour conversion factors (0.38 for three hours in the AM and 0.28 for four hours in the PM peak periods). Then the intersection turning movements were developed using the "Iterative" methodology as described in the "National Cooperative Highway Research Program Report (NCHRP) 255: Highway Traffic Data for Urbanized Area Project Planning and Design," Chapter 8. The method uses the base year turning volume percentages (from the traffic counts) and the projected growth (difference) in the intersection's approach/departure volumes between the existing and future models, then proceeds through an iterative computational technique to produce a balanced, final set of adjusted future year turning volumes.

2.2 Study Intersections

A total of 62 existing and future intersections in the City of Murrieta were identified as study intersections. Under the future scenarios, the intersections of Madison Avenue at Kalmia Street and I-15 SB Ramps at Kalmia Street will be reconfigured and combined into one intersection. Therefore, under the future scenarios, a total of 61 intersections were analyzed. A list of the study intersections and a map of their locations are provided in **Table 2** and **Figure 4**, respectively.

Table 2 - List of Study Intersections

Int. No.	Intersection	Status
1	Menifee Rd / Scott Rd	Existing
2	Leon Rd / Scott Rd	Existing
3	Winchester Rd - SR-79 / Scott Rd	Existing
4	Antelope Rd / Keller Rd	Existing
5	Menifee-Meadowlark Rd/ Keller Rd	Existing
6	Briggs Rd / Keller Rd	Future
7	Leon Rd / Keller Rd	Existing
8	Winchester Rd - SR-79 / Keller Rd	Existing
9	Antelope Rd / Golden City Drive – Baxter Rd	Future
10	Whitewood-Meadowlark/ Golden City Dr – Baxter Rd	Future
11	Briggs Rd / Baxter Rd – Jean Nicholas	Future
12	Leon Rd / Jean Nicholas	Existing
13	Winchester Rd - SR-79 / Nicholas - Skyview	Existing
14	Antelope Rd / Linnel Lane Extension	Future
15	Whitewood-Meadowlark/ Linnel Lane Extension	Future
16	Leon Rd / Max Gillis Rd	Existing
17	Winchester Rd - SR-79 / Max Gillis - Thompson	Existing
18	California Oaks Rd / Clinton Keith Rd	Existing

Int. No.	Intersection	Status
19	I-215 SB Off-Ramp / Clinton Keith Rd	Existing
20	I-215 NB Off-Ramp / Clinton Keith Rd	Existing
21	Antelope Rd / Clinton Keith Rd	Under Construction
22	Meadowlark – Whitewood Rd / Clinton Keith Rd	Existing
23	Liberty Rd / Clinton Keith Rd	Future
24	Leon Rd / Clinton Keith Rd	Future
25	Winchester Rd - SR-79 / Clinton Keith Rd - Benton Rd	Existing
26	Winchester Rd - SR-79 / Via Mira Mosa – Auld Rd	Existing
27	Monroe Ave / Los Alamos	Existing
28	Jefferson Ave / Murrieta Hot Springs Rd	Existing
29	Madison Ave / Murrieta Hot Springs Rd	Existing
30	I-15 SB Off-Ramp / Murrieta Hot Springs Rd	Existing
31	I-15 NB Off-Ramp / Murrieta Hot Springs Rd	Existing
32	I-215 SB Off-Ramp / Murrieta Hot Springs Rd	Existing
33	I-215 NB Off-Ramp / Murrieta Hot Springs Rd	Existing
34	Jackson Ave / Murrieta Hot Springs Rd	Existing
35	Margarita Rd/ Murrieta Hot Springs Rd	Existing
36	French Valley – Date St / Murrieta Hot Springs Rd	Future
37	Jefferson Ave / Guava St	Existing
38	Jefferson Ave / Cherry St	Existing
39	Washington Ave / Calle del Oso Oro – Nutmeg St	Existing
40	Clinton Keith Rd / Calle de Oso Oro – Bear Creek Dr	Existing
41	Jefferson Ave / Nutmeg St	Existing
42	Jefferson Ave / Magnolia St	Existing
43	Jefferson Ave / Lemon St	Existing
44	Jefferson Ave / Kalmia St	Existing
45	Jefferson Ave / Juniper St	Existing
46	Jefferson Ave / Ivy St – Los Alamos Rd	Existing
47	Madison Ave / Kalmia St	Existing
48	I-15 SB Ramps / Kalmia St	Existing
49	Monroe Ave / Murrieta Hot Springs Rd	Existing
50	Hancock Ave / Murrieta Hot Springs Rd	Existing
51	Alta Murrieta Dr / Murrieta Hot Springs Rd	Existing
52	Winchester Rd - SR-79 / Murrieta Hot Springs Rd	Existing
53	Hancock Ave / Los Alamos Rd	Existing
54	I-215 SB Ramps / Los Alamos Rd	Existing
55	I-215 NB Ramps / Los Alamos Rd	Existing
56	Whitewood Rd / Los Alamos Rd	Existing
57	Whitewood Rd / Murrieta Hot Springs Rd	Existing
58	Adams Ave / Guava St	Existing
59	Nutmeg St / Clinton Keith Rd	Existing
60	Murrieta Oaks Ave - Mitchell Rd / Clinton Keith Rd	Existing
61	I-215 SB Ramps / Scott Rd	Existing
62	I-215 NB Ramps / Scott Rd	Existing

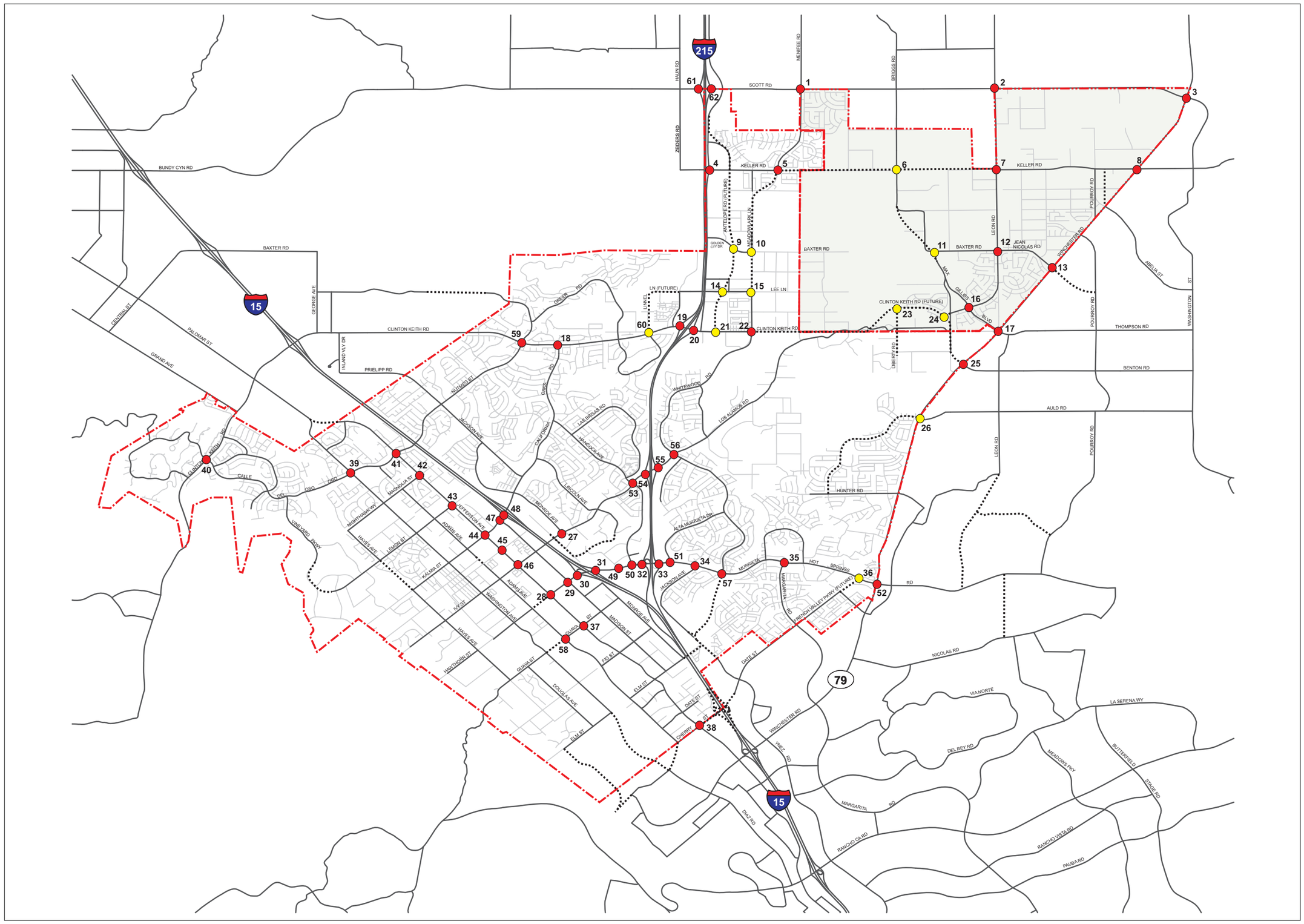

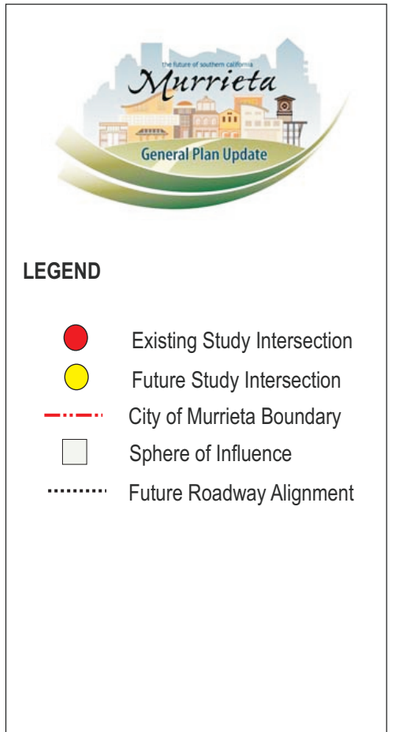

ITERIS

11/09 JN 10-106976

Study Intersections

Figure 4

2.3 Roadway LOS Volume-to-Capacity (V/C) Ratios

Roadway segments are evaluated by comparing average daily traffic (ADT) volumes to street capacity. Capacity is a measure of the ability of the street system to meet and serve the demands placed on it. It is generally considered the most practical measure of how well the mobility needs of the City are being met.

The capacity of the road is affected by a number of factors, including street width, roadway design, number of travel lanes, number of roadway intersections, number of driveways, presence of on-street parking, and traffic signal cycle length.

The City of Murrieta's Level of Service standards, as published in the City's General Plan, Chapter IV, is LOS C for roadway segments. **Tables 3** and **4** below depict the maximum daily capacity values for each roadway type and the level of service ranges for roadway segments, respectively.

Table 3 – Daily Roadway Capacity Values

Facility	Number of Lanes	Maximum Two-Way Volume (ADT)		
		LOS C	LOS D	LOS E
Freeway	4	61,200	68,900	76,500
Freeway	6	94,000	105,800	117,500
Freeway	8	128,400	144,500	160,500
Freeway	10	160,500	180,500	200,600
Expressway	4	32,700	36,800	40,900
Expressway	6	49,000	55,200	61,300
Multi-Modal Corridor	4	28,700	32,300	35,900
Multi-Modal Corridor	6	43,100	48,500	53,900
Augmented Urban Arterial	8	57,400	64,600	71,800
Urban Arterial	6	43,100	48,500	53,900
Arterial	4	28,700	32,300	35,900
Arterial	6	43,100	48,500	53,900
Major	4	27,300	30,700	34,100
Secondary	4	20,700	23,300	25,900
Collector	2	10,400	11,700	13,000

Notes:
1. All capacity figures are based on optimum conditions and are intended as guidelines for planning purposed only.
2. Maximum two-way ADT values are based on the 1999 Modified Highway Capacity Manual Level of Service Tables as defined in the Riverside County Congestion Management Program.

TABLE 4 – ROADWAY SEGMENT LEVEL OF SERVICE CRITERIA

Level of Service	Volume-to-Capacity Ratio
A	0 – 0.60
B	> 0.60 – 0.70
C	> 0.70 – 0.80
D	> 0.80 – 0.90
E	> 0.90 – 1.00
F	> 1.00

2.4 INTERSECTION LEVEL OF SERVICE (LOS) CRITERIA

Intersection operations are evaluated using a Level of Service system. The concept of level of service is used to characterize how well the roadway network operates. These evaluations are based on empirical data collected and reported in the 2000 Highway Capacity Manual, which is maintained by the Transportation Research Board, as directed by the "Traffic Impact Analysis Preparation Guide" for the City of Murrieta. The 2000 Highway Capacity Manual utilizes a methodology that accesses the average control delay at intersections. This methodology results in level of service measurements, indicating the quality of traffic flow and using letter grades from A (best) to F (worst). The City of Murrieta's Level of Service standards, as published in the City's General Plan, Chapter IV, is LOS D for peak hour intersection operations, and LOS E at freeway interchanges. The level of service ranges for signalized and unsignalized intersections are provided below in **Tables 5** and **6**.

TABLE 5 – SIGNALIZED INTERSECTION LEVEL OF SERVICE CRITERIA

Level of Service	Description	Control Delay/Veh (sec/veh)
A	Excellent operation. All approaches to the intersection appear quite open, turning movements are easily made, and nearly all drivers find freedom of operation.	≤ 10
B	Very good operation. Many drivers begin to feel somewhat restricted within platoons of vehicles. This represents stable flow. An approach to an intersection may occasionally be fully utilized and traffic queues start to form.	> 10 – 20
C	Good operation. Occasionally drivers may have to wait more than 60 seconds, and back-ups may develop behind turning vehicles. Most drivers feel somewhat restricted.	> 20 – 35
D	Fair operation. Cars are sometimes required to wait more than 60 seconds during short peaks. There are no long-standing traffic queues. This level is typically associated with design practice for peak periods.	> 35 – 55
E	Poor operation. Some long-standing vehicular queues develop on critical approaches to intersections. Delays may be up to several minutes.	> 55 – 80
F	Forced flow. Represents jammed conditions. Backups from locations downstream or on the cross street may restrict or prevent movement of vehicles out of the intersection approach lanes; therefore, volumes carried are not predictable. Potential for stop and go type traffic flow.	> 80

Source: *Highway Capacity Manual*, Transportation Research Board, 2000.

TABLE 6 – UNSIGNALIZED INTERSECTION LEVEL OF SERVICE CRITERIA

Level of Service	Average Control Delay (sec/veh)
A	0 – 10
B	> 10 – 15
C	> 15 – 25
D	> 25 – 35
E	> 35 – 50
F	> 50

Source: *Highway Capacity Manual*, Transportation Research Board, 2000.

3.0 EXISTING CONDITIONS ANALYSIS

3.1 ROADWAY SEGMENTS

Using the City of Murrieta's 2008 daily traffic volumes (shown in **Figure 5**) and the maximum daily roadway capacity values, daily volume-to-capacity ratios have been determined for locations where daily traffic volumes were available. The general locations of the roadway segments that currently operate at an unacceptable level of service (LOS D, E or F) per the City of Murrieta's Level of Service standards are shown below. A map of the 2008 roadway volume-to-capacity ratios is shown in **Figure 6**.

Level of Service D

- Kalmia Street between Monroe Avenue and Jackson Avenue
- Jefferson Avenue north of Kalmia Street, and north of Elm Street
- Murrieta Hot Springs Road immediately east of I-15
- Nutmeg Street east of Jackson Avenue
- Winchester Road south of Auld Road.

Level of Service E

- Kalmia Street between Madison Street and I-15
- Murrieta Hot Springs Road immediately west of Hancock Avenue
- Murrieta Hot Springs Road from Jackson Avenue to east of Whitewood Road.

LOS F

- California Oaks Road between I-15 and Monroe Avenue
- Kalmia Street west of Adams Avenue
- Murrieta Hot Springs Road at I-215 and west of Winchester Road.

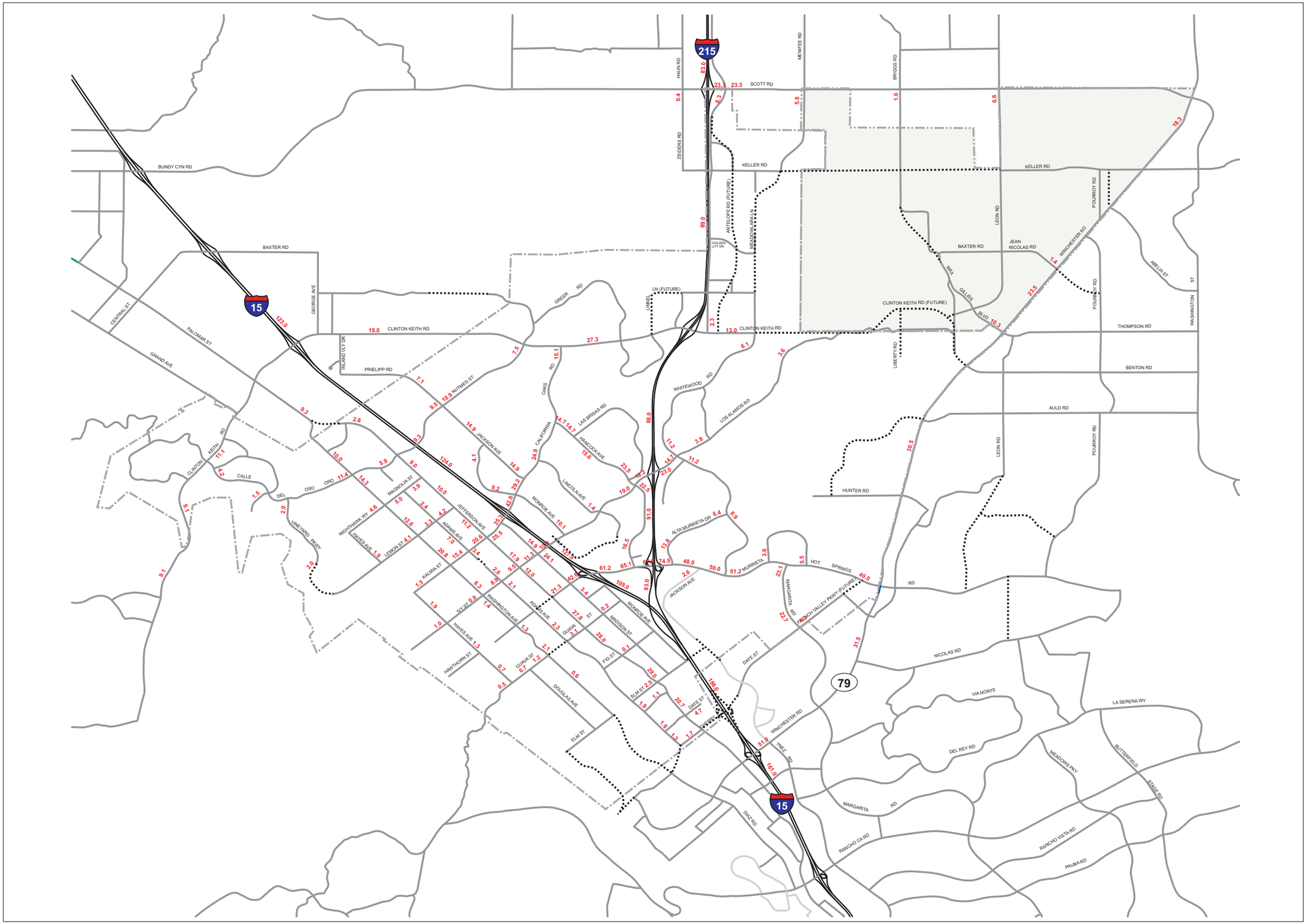

LEGEND

17.6 ADT Volume (in Thousands)

City of Murrieta Boundary

Sphere of Influence

0 1 2 Miles

ITERIS

11/09 JN 10-106976

2008 Average Daily Traffic Volumes

Figure 5

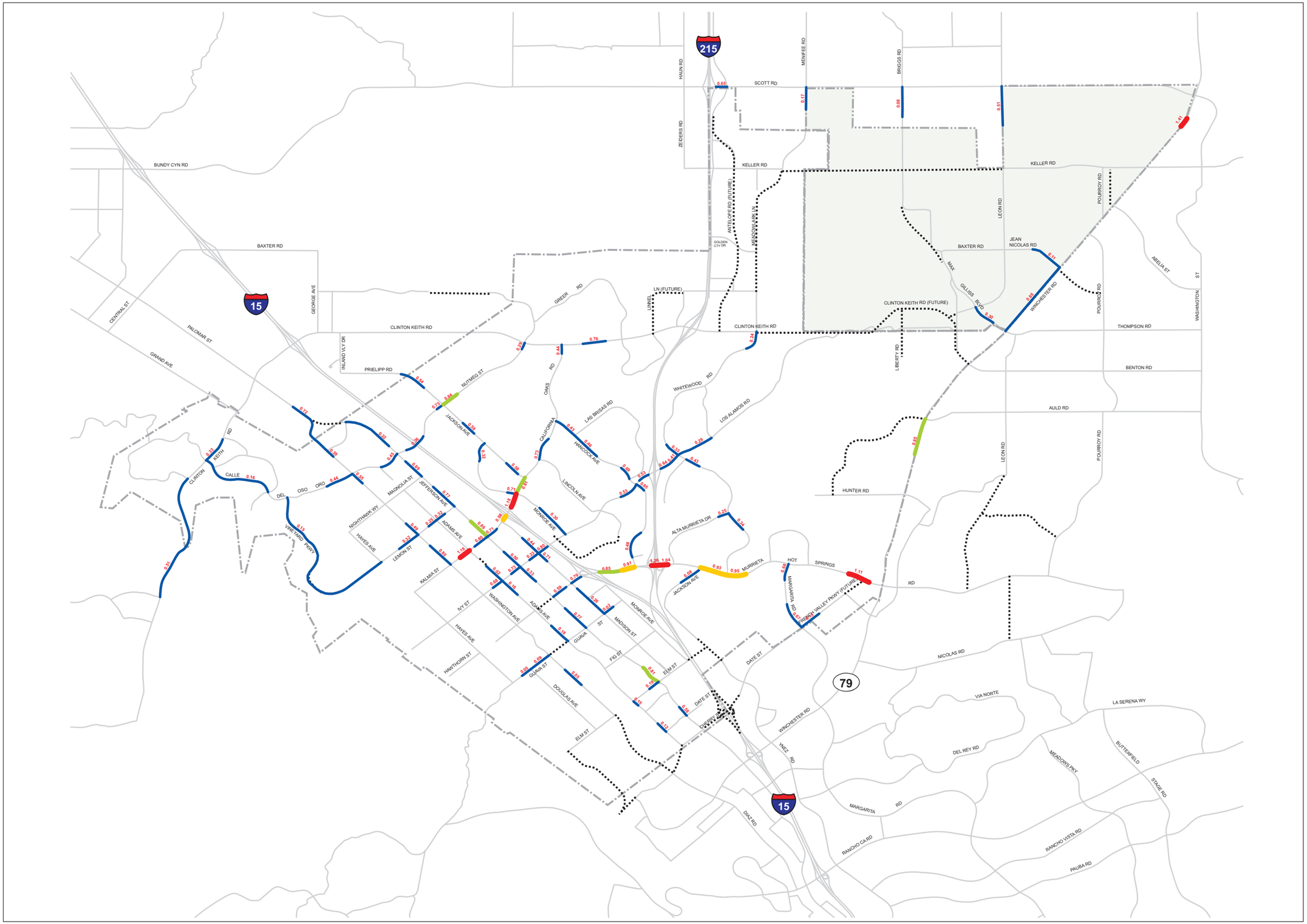

LEGEND

- 0.73 Volume/Capacity Ratio
- LOS A - C
- LOS D
- LOS E
- LOS F
- City of Murrieta Boundary
- Sphere of Influence
- Future Roadway Alignment

0 1 2 Miles

ITERIS

11/09 JN 10-106976

2008 Daily Volume-to-Capacity Ratios

Figure 6

3.2 INTERSECTIONS

A total of 62 intersections (51 existing intersections and 11 future intersections) in the City of Murrieta were identified as study intersections. Of the 51 existing study intersections, 40 study intersections are currently signalized and 11 are currently stop controlled. Stop sign controlled intersections include side-street stop sign controlled (two-way stop where the major street operates freely) or all-way stop sign controlled intersections (all approaches must stop for stop signs). A list of the 62 study intersections and a map of their locations are provided in **Table 7** and were previously illustrated in **Figure 4**.

TABLE 7 - LIST OF STUDY INTERSECTIONS

Int. No.	Intersection	Existing Traffic Control	Status
1	Menifee Rd / Scott Rd	Signalized	Existing
2	Leon Rd / Scott Rd	All-Way Stop	Existing
3	Winchester Rd - SR-79 / Scott Rd	Signalized	Existing
4	Antelope Rd / Keller Rd	Signalized	Existing
5	Menifee-Meadowlark Rd/ Keller Rd	Signalized	Existing
6	Briggs Rd / Keller Rd	-	Future
7	Leon Rd / Keller Rd	Two-Way Stop	Existing
8	Winchester Rd - SR-79 / Keller Rd	Two-Way Stop	Existing
9	Antelope Rd / Golden City Drive – Baxter Rd	-	Future
10	Whitewood-Meadowlark/ Golden City Dr – Baxter Rd	-	Future
11	Briggs Rd / Baxter Rd – Jean Nicholas	-	Future
12	Leon Rd / Jean Nicholas	Two-Way Stop	Existing
13	Winchester Rd - SR-79 / Nicholas - Skyview	Signalized	Existing
14	Antelope Rd / Linnel Lane Extension	-	Future
15	Whitewood-Meadowlark/ Linnel Lane Extension	-	Future
16	Leon Rd / Max Gillis Rd	Signalized	Existing
17	Winchester Rd - SR-79 / Max Gillis - Thompson	Signalized	Existing
18	California Oaks Rd / Clinton Keith Rd	Signalized	Existing
19	I-215 SB Off-Ramp / Clinton Keith Rd	Signalized	Existing
20	I-215 NB Off-Ramp / Clinton Keith Rd	Signalized	Existing
21	Antelope Rd / Clinton Keith Rd	-	Under Construction
22	Meadowlark – Whitewood Rd / Clinton Keith Rd	Signalized	Existing
23	Liberty Rd / Clinton Keith Rd	-	Future
24	Leon Rd / Clinton Keith Rd	-	Future
25	Winchester Rd - SR-79 / Clinton Keith Rd - Benton Rd	Signalized	Existing
26	Winchester Rd - SR-79 / Via Mira Mosa – Auld Rd	Signalized	Existing
27	Monroe Ave / Los Alamos	Signalized	Existing
28	Jefferson Ave / Murrieta Hot Springs Rd	Signalized	Existing
29	Madison Ave / Murrieta Hot Springs Rd	Signalized	Existing
30	I-15 SB Off-Ramp / Murrieta Hot Springs Rd	Signalized	Existing
31	I-15 NB Off-Ramp / Murrieta Hot Springs Rd	Signalized	Existing

Int. No.	Intersection	Existing Traffic Control	Status
32	I-215 SB Off-Ramp / Murrieta Hot Springs Rd	Signalized	Existing
33	I-215 NB Off-Ramp / Murrieta Hot Springs Rd	Signalized	Existing
34	Jackson Ave / Murrieta Hot Springs Rd	Signalized	Existing
35	Margarita Rd/ Murrieta Hot Springs Rd	Signalized	Existing
36	French Valley – Date St / Murrieta Hot Springs Rd	-	Future
37	Jefferson Ave / Guava St	Signalized	Existing
38	Jefferson Ave / Cherry St	Signalized	Existing
39	Washington Ave / Calle del Oso Oro – Nutmeg St	Signalized	Existing
40	Clinton Keith Rd / Calle de Oso Oro – Bear Creek Dr	Signalized	Existing
41	Jefferson Ave / Nutmeg St	Signalized	Existing
42	Jefferson Ave / Magnolia St	All-Way Stop	Existing
43	Jefferson Ave / Lemon St	Signalized	Existing
44	Jefferson Ave / Kalmia St	Signalized	Existing
45	Jefferson Ave / Juniper St	Signalized	Existing
46	Jefferson Ave / Ivy St – Los Alamos Rd	Signalized	Existing
47	Madison Ave / Kalmia St	Signalized	Existing
48	I-15 SB Ramps / Kalmia St	Signalized	Existing
49	Monroe Ave / Murrieta Hot Springs Rd	Signalized	Existing
50	Hancock Ave / Murrieta Hot Springs Rd	Signalized	Existing
51	Alta Murrieta Dr / Murrieta Hot Springs Rd	Signalized	Existing
52	Winchester Rd - SR-79 / Murrieta Hot Springs Rd	Signalized	Existing
53	Hancock Ave / Los Alamos Rd	Signalized	Existing
54	I-215 SB Ramps / Los Alamos Rd	Signalized	Existing
55	I-215 NB Ramps / Los Alamos Rd	Signalized	Existing
56	Whitewood Rd / Los Alamos Rd	Signalized	Existing
57	Whitewood Rd / Murrieta Hot Springs Rd	Signalized	Existing
58	Adams Ave / Guava St	Signalized	Existing
59	Nutmeg St / Clinton Keith Rd	Signalized	Existing
60	Murrieta Oaks Ave - Mitchell Rd / Clinton Keith Rd	Signalized	Existing
61	I-215 SB Ramps / Scott Rd	Signalized	Existing
62	I-215 NB Ramps / Scott Rd	Signalized	Existing

Existing lane configurations and traffic volumes are illustrated in **Figures 7** and **8**, respectively. **Table 8** provides the existing conditions level of service results for the 51 existing study intersections. As shown, all 51 existing study intersections currently operate at an acceptable level of service of LOS D or better.

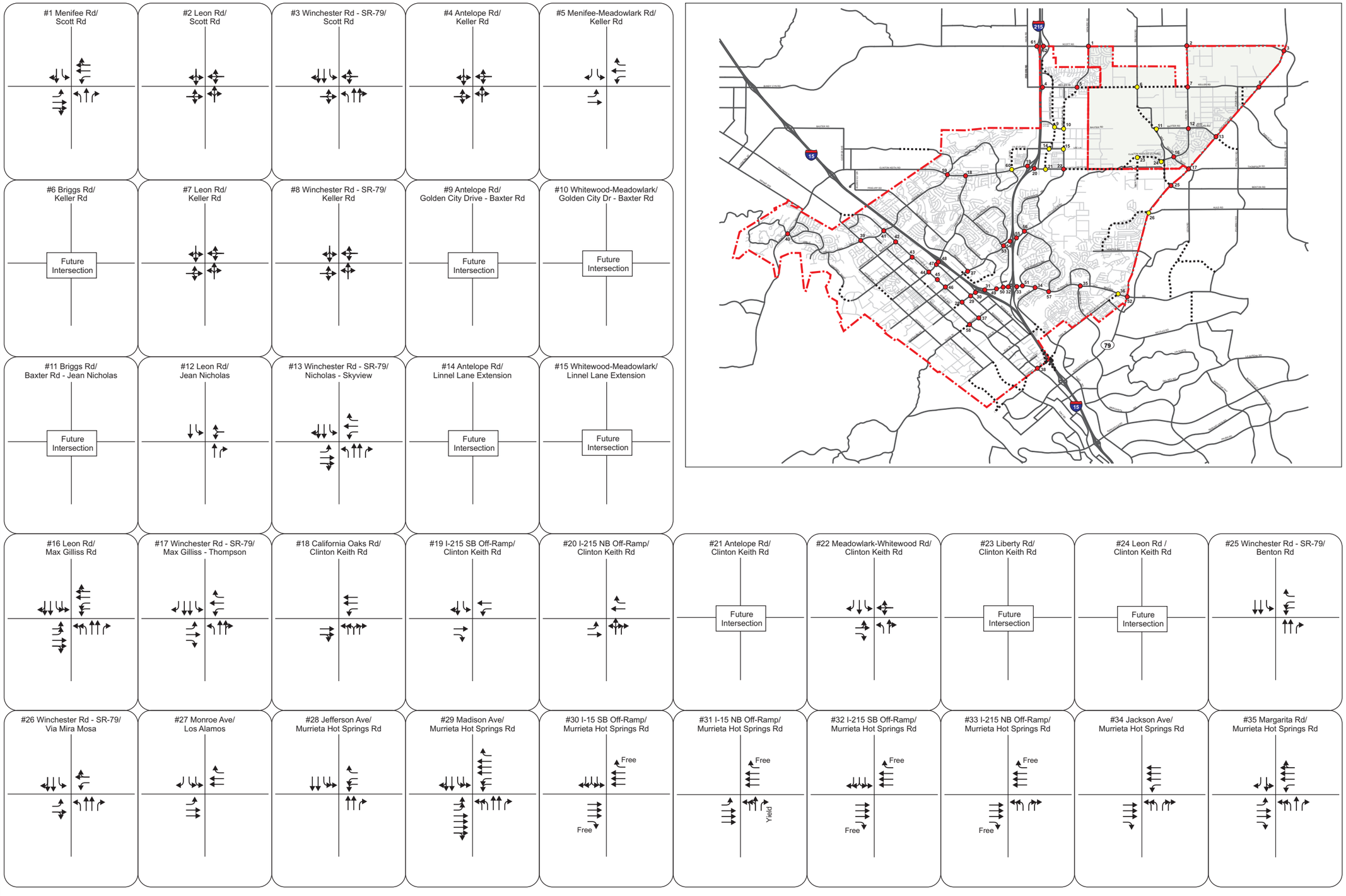

Murrieta
General Plan Update

LEGEND

- Through Lane
- Turn Lane
- Shared Lane

ITERIS

11/09 JN 10-106976

Existing Lane Configurations

Figure 7A

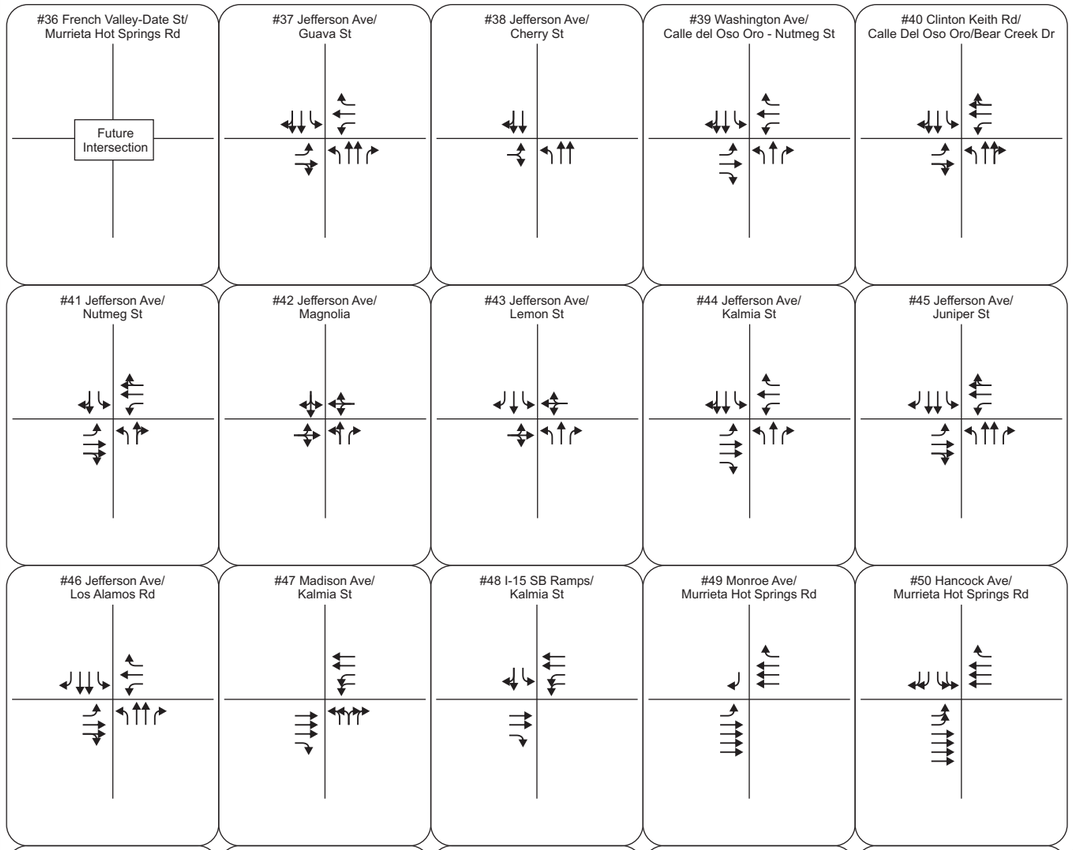

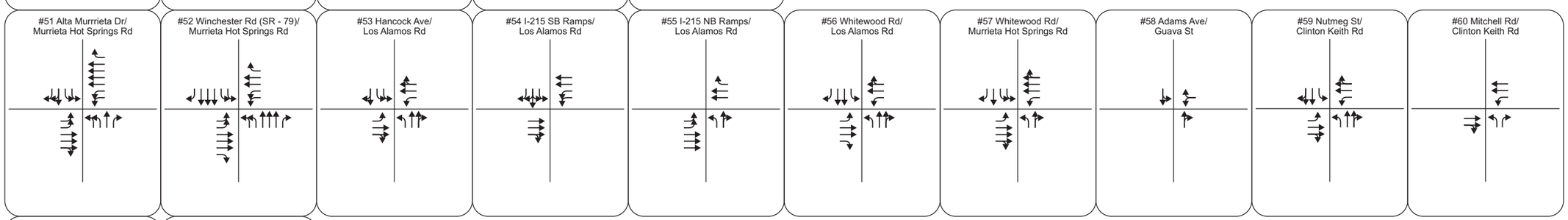

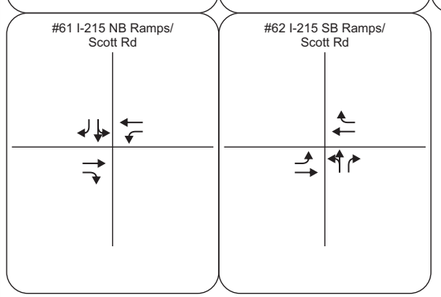

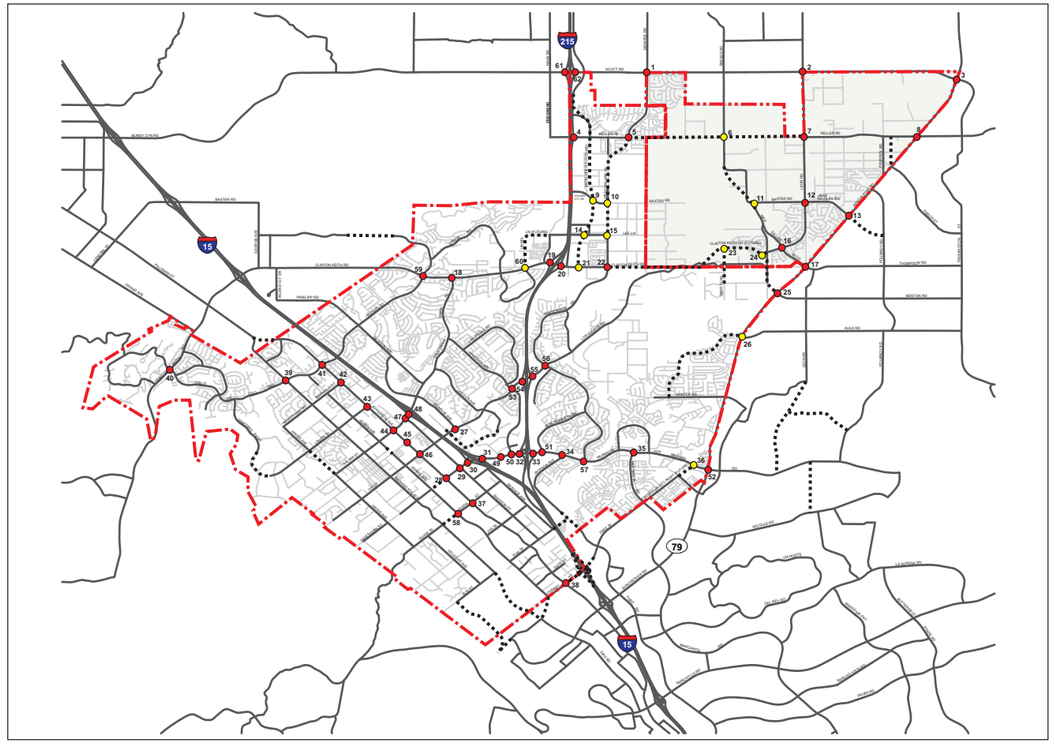

LEGEND

- Through Lane
- Turn Lane
- Shared Lane

ITERIS

11/09 JN 10-106976

Existing Lane Configurations

Figure 7B

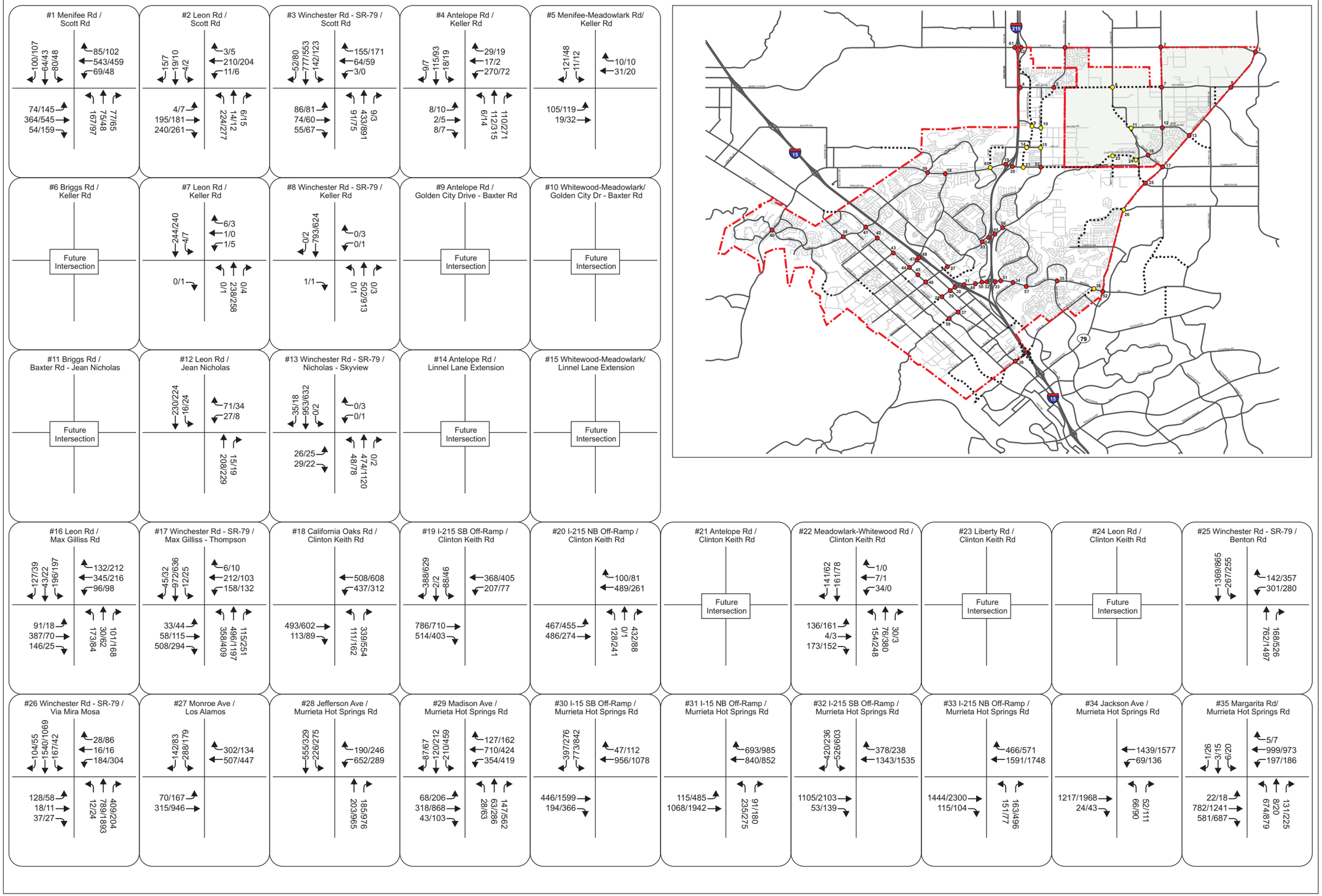

Murrieta General Plan Update

LEGEND

- Existing Study Intersection
- Future Study Intersection
- City of Murrieta Boundary
- Sphere of Influence
- Future Roadway Alignment
- 31/20 AM Peak Hr/PM Peak Hr

ITERIS

Existing Peak Hour Turning Movement Volumes

Figure 8A

#36 French Valley-Date St / Murrieta Hot Springs Rd
Future Intersection

#37 Jefferson Ave / Guava St
1198/560 10/16 16/19 30/9 11/75 319/1995

#38 Jefferson Ave / Cherry St
28/9 742/880 10/4 50/76 105/55 553/1372

#39 Washington Ave / Calle del Oso Oro - Nutmeg St
57/35 264/278 53/64 31/89 109/258 162/124 36/20 223/121 551/275 226/327 199/319 101/113

#40 Clinton Keith Rd / Calle Del Oso Oro/Bear Creek Dr
75/105 157/233 31/83 64/53 26/37 64/75 69/67 37/22 2/3 2/1 262/255 155/35

#41 Jefferson Ave / Nutmeg St
7/9 93/44 11/14 22/29 250/227 261/125 15/11 181/179 178/94 80/221 32/84 136/195

#42 Jefferson Ave / Magnolia
143/38 428/264 5/4 1/7 6/7 17/5 124/67 3/7 95/33 56/96 164/480 6/9

#43 Jefferson Ave / Lemon St
61/6 501/324 1/2 2/4 3/4 1/4 21/7 1/0 82/37 76/78 257/616 0/1

#44 Jefferson Ave / Kalmia St
52/11 273/186 265/168 200/298 428/458 138/128 19/20 518/515 207/198 115/191 126/326 97/233

#45 Jefferson Ave / Juniper St
31/28 526/392 37/47 23/45 78/47 8/10 54/48 84/53 79/55 69/61 258/738 15/74

#46 Jefferson Ave / Ivy St/Los Alamos Rd
37/36 441/297 152/148 132/132 120/161 171/98 27/44 145/245 102/129 100/180 171/627 39/402

#47 Madison Ave / Kalmia St
772/952 310/383 765/1020 107/172 108/190 237/537

#48 Madison Ave/ I-15 SB Ramps / Kalmia St
278/361 2/2 305/359 773/987 412/385 483/1109 373/408

#49 Monroe Ave / Murrieta Hot Springs Rd
71/130 25/30 1463/1574 125/227 1097/2111

#50 Hancock Ave / Murrieta Hot Springs Rd
147/183 264/569 464/421 1346/1465 227/237 884/1924

#51 Alta Murrieta Dr / Murrieta Hot Springs Rd
297/412 94/132 61/208 107/112 1350/1293 72/119 249/717 995/1697 235/499 175/394 57/195 14/45

#52 Winchester Rd (SR-79) / Murrieta Hot Springs Rd
536/498 1408/1064 128/122 37/62 340/412 268/273 512/611 318/522 137/207 118/250 729/1689 135/204

#53 Hancock Ave / Los Alamos Rd
156/65 246/222 526/459 293/295 711/537 226/163 125/198 601/965 66/62 51/149 143/559 93/290

#54 I-215 SB Ramps / Los Alamos Rd
497/408 1/3 119/192 899/738 250/160 801/1441 426/287

#55 I-215 NB Ramps / Los Alamos Rd
72/165 951/774 242/394 670/1181 209/129 1/4 107/175

#56 Whitewood Rd / Los Alamos Rd
254/162 110/196 11/13 6/18 270/207 33/70 124/269 226/353 64/265 126/197 90/343 59/64

#57 Whitewood Rd / Murrieta Hot Springs Rd
63/93 20/7 353/316 241/417 1556/1776 23/21 31/101 1106/1903 4/6 4/6 38/5 43/16

#58 Adams Ave / Guava St
67/22 94/77 44/90 3/7 13/86 2/26

#59 Nutmeg St / Clinton Keith Rd
39/21 55/23 101/61 39/73 404/397 206/210 17/52 357/533 79/69 69/48 34/61 201/192

#60 Mitchell Rd / Clinton Keith Rd
752/946 158/93 862/1100 254/37 122/32 212/67

#61 I-215 SB Ramps / Scott Rd
88/114 4/4 258/334 501/603 447/465 535/580 320/165

#62 I-215 NB Ramps / Scott Rd
380/364 792/913 108/112 603/780 145/182 12/6 349/468

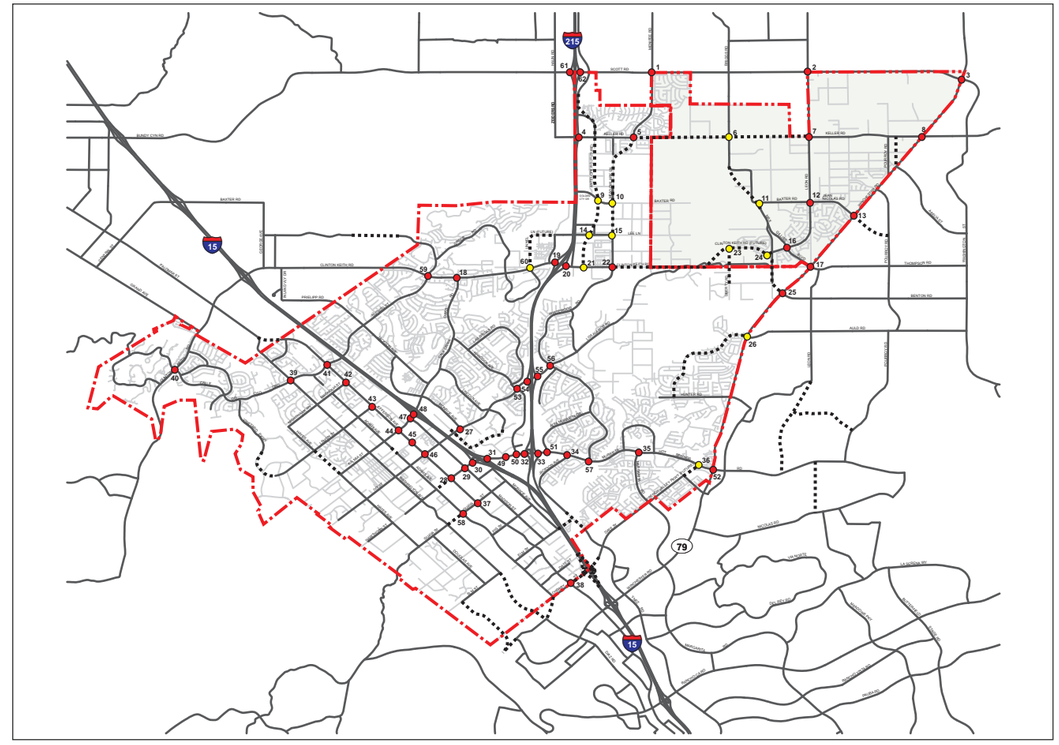

Murrieta
the future of southern california
General Plan Update

LEGEND

- Existing Study Intersection
- Future Study Intersection
- City of Murrieta Boundary
- Sphere of Influence
- Future Roadway Alignment
- 31/20 AM Peak Hr/PM Peak Hr

ITERIS

Existing Peak Hour Turning Movement Volumes

Figure 8B

TABLE 8 – EXISTING LEVEL OF SERVICE

Int. No.	Intersection	AM Peak Hour		PM Peak Hour	
		LOS	Ave Del/Veh	LOS	Ave Del/Veh
1	Menifee Rd / Scott Rd	B	19.8	B	18.0
2	Leon Rd / Scott Rd	B	12.4	B	13.4
3	Winchester Rd - SR-79 / Scott Rd	C	20.7	B	18.5
4	Antelope Rd / Keller Rd	B	10.4	B	13.5
5	Menifee-Meadowlark Rd/ Keller Rd	A	8.1	A	8.2
6	Briggs Rd / Keller Rd	N/A	N/A	N/A	N/A
7	Leon Rd / Keller Rd	B	10.2	B	11.6
8	Winchester Rd - SR-79 / Keller Rd	B	14.2	C	23.0
9	Antelope Rd / Golden City Drive – Baxter Rd	N/A	N/A	N/A	N/A
10	Whitewood-Meadowlark/ Golden City Dr – Baxter Rd	N/A	N/A	N/A	N/A
11	Briggs Rd / Baxter Rd – Jean Nicholas	N/A	N/A	N/A	N/A
12	Leon Rd / Jean Nicholas	B	10.7	B	10.2
13	Winchester Rd - SR-79 / Nicholas - Skyview	A	4.0	A	5.1
14	Antelope Rd / Linnel Lane Extension	N/A	N/A	N/A	N/A
15	Whitewood-Meadowlark/ Linnel Lane Extension	N/A	N/A	N/A	N/A
16	Leon Rd / Max Gillis Rd	C	24.6	C	25.4
17	Winchester Rd - SR-79 / Max Gillis - Thompson	D	37.1	C	25.6
18	California Oaks Rd / Clinton Keith Rd	C	21.7	C	22.4
19	I-215 SB Off-Ramp / Clinton Keith Rd	C	23.9	C	26.1
20	I-215 NB Off-Ramp / Clinton Keith Rd	C	26.2	C	23.1
21	Antelope Rd / Clinton Keith Rd	N/A	N/A	N/A	N/A
22	Meadowlark – Whitewood Rd / Clinton Keith Rd	B	10.5	B	13.4
23	Liberty Rd / Clinton Keith Rd	N/A	N/A	N/A	N/A
24	Leon Rd / Clinton Keith Rd	N/A	N/A	N/A	N/A
25	Winchester Rd - SR-79 / Clinton Keith Rd - Benton Rd	B	14.4	C	21.2
26	Winchester Rd - SR-79 / Via Mira Mosa – Auld Rd	B	14.2	B	14.4
27	Monroe Ave / Los Alamos	B	15.0	B	12.4
28	Jefferson Ave / Murrieta Hot Springs Rd	C	21.2	C	20.7
29	Madison Ave / Murrieta Hot Springs Rd	C	25.3	C	34.2
30	I-15 SB Off-Ramp / Murrieta Hot Springs Rd	B	17.7	B	18.9
31	I-15 NB Off-Ramp / Murrieta Hot Springs Rd	B	11.8	B	15.3
32	I-215 SB Off-Ramp / Murrieta Hot Springs Rd	B	16.0	B	14.5
33	I-215 NB Off-Ramp / Murrieta Hot Springs Rd	A	5.4	A	10.0
34	Jackson Ave / Murrieta Hot Springs Rd	A	4.3	A	6.2
35	Margarita Rd/ Murrieta Hot Springs Rd	B	19.2	C	23.7
36	French Valley – Date St / Murrieta Hot Springs Rd	N/A	N/A	N/A	N/A
37	Jefferson Ave / Guava St	A	2.0	A	1.4
38	Jefferson Ave / Cherry St	C	15.2	C	15.0
39	Washington Ave / Calle del Oso Oro – Nutmeg St	C	29.2	C	26.8
40	Clinton Keith Rd / Calle de Oso Oro – Bear Creek Dr	B	13.6	B	16.2
41	Jefferson Ave / Nutmeg St	B	13.2	B	12.9
42	Jefferson Ave / Magnolia	C	18.2	C	21.2
43	Jefferson Ave / Lemon St	B	10.9	A	6.6

Int. No.	Intersection	AM Peak Hour		PM Peak Hour	
		LOS	Ave Del/Veh	LOS	Ave Del/Veh
44	Jefferson Ave / Kalmia St	C	26.2	C	26.7
45	Jefferson Ave / Juniper St	B	18.6	B	13.8
46	Jefferson Ave / Ivy St – Los Alamos Rd	C	27.9	C	25.2
47	Madison Ave / Kalmia St	B	16.2	C	20.3
48	I-15 SB Ramps / Kalmia St	C	20.4	C	21.0
49	Monroe Ave / Murrieta Hot Springs Rd	C	15.8	C	23.8
50	Hancock Ave / Murrieta Hot Springs Rd	B	11.7	B	14.7
51	Alta Murrieta Dr / Murrieta Hot Springs Rd	C	21.3	C	28.1
52	Winchester Rd (SR-79) / Murrieta Hot Springs Rd	C	24.0	C	26.4
53	Hancock Ave / Los Alamos Rd	C	28.4	C	34.5
54	I-215 SB Ramps / Los Alamos Rd	B	18.0	B	15.6
55	I-215 NB Ramps / Los Alamos Rd	B	15.4	B	15.0
56	Whitewood Rd / Los Alamos Rd	C	26.7	C	26.0
57	Whitewood Rd / Murrieta Hot Springs Rd	B	12.6	A	9.7
58	Adams Ave / Guava St	A	8.6	A	9.3
59	Nutmeg St / Clinton Keith Rd	C	20.6	C	21.0
60	Murrieta Oaks Ave - Mitchell Rd / Clinton Keith Rd	B	14.5	A	5.8
61	I-215 SB Ramps / Scott Rd	C	23.2	C	25.6
62	I-215 NB Ramps / Scott Rd	B	18.0	C	23.4

4.0 BUILDOUT CONDITIONS ANALYSIS

The Buildout Conditions analysis section includes the following three scenarios:

1. Existing General Plan buildout scenario – this is what would occur if no changes were made to the current General Plan land uses. Two versions of the Existing General Plan buildout scenario were modeled:
    a. Without the Whitewood Road extension between Murrieta Hot Springs Road and Jackson Avenue;
    b. With the Whitewood Road extension between Murrieta Hot Springs Road and Jackson Avenue.
2. Recommended scenario – this is the recommended land use plan for the General Plan update.
3. Scenario B – this scenario is similar to the Recommended scenario land use plan, the primary differences are additional multi-family housing in the Clinton Keith Road / Mitchell Road and the North Murrieta Business Corridor Focus Areas.

The land uses contained within each land use scenario were converted into SED data, and input into the Murrieta travel demand model. The data is summarized for the City and sphere areas in **Table 9**.

TABLE 9 – SOCIOECONOMIC DATA (SED) SUMMARY

	Population			Households			Employment		
	City	Sphere	Total	City	Sphere	Total	City	Sphere	Total
Existing Conditions	101,315	8,326	109,641	33,771	2,762	36,533	19,888	mm[1]	19,888
General Plan Buildout Scenario	122,792	25,499	148,291	41,133	8,489	49,622	93,502	3,086	96,588
Recommended Scenario	133,261	25,499	158,760	44,484	8,489	52,973	130,153	3,086	133,239
Scenario B	156,421	25,499	181,920	52,204	8,489	60,693	118,412	3,086	121,498

Note:
1. Minimal number

The future roadway network generally conforms to the current adopted Murrieta Circulation Element. The City has identified changes to the roadway network; these have been incorporated into the travel demand model. Other changes in the model were made in order to reflect how the roadways generally function. Changes include:

- Jefferson Avenue from Lemon Street to north of Nutmeg Street – modeled as six-lanes;
- Keller Road between Menifee Road and Briggs Road added as a Secondary;
- Removal of connection of Linnel Lane to Greer Road;
- Removal of connection of Liberty Road to Winchester Road;
- Removal of the connection of Monroe Avenue at Elm Street;
- Removal of Hunter Road as a Collector from west of Via Mira Mosa to Whitewood Road;
- Extension of Whitewood Road as a Major between Murrieta Hot Springs Road and Jackson Avenue (when modeled);
- Hayes Avenue from Guava Street to Kalmia Avenue, and between Nighthawk Way and Vineyard Parkway – modeled as a Collector;
- Washington Avenue from Hawthorn Street to Kalmia Avenue – modeled as a Collector;
- Nighthawk Way/Magnolia Street between Hayes Avenue to Jefferson Street – modeled as a Collector;
- Kalmia Street from west City boundary to Washington Avenue; Ivy Street from West City Limits to Washington Avenue; portions of Hawthorne Street from west City boundary to Adams Avenue; Douglas Avenue from Elm Street to Guava Street; Washington Avenue from south City boundary to Elm Street; Date Street from Adams Avenue to Madison Avenue; Corning Place between Adams Avenue and Jefferson Avenue; Adams Avenue between Ivy Street and Magnolia Street, and

south of Calle del Oso Oro; Fig Street between Adams Avenue and Monroe Avenue – all modeled as Collectors;

- Elm Street between Hayes Avenue and Washington Avenue; and Hayes Avenue between south City boundary and Elm Avenue – modeled as Secondaries;
- Nutmeg Street between Clinton Keith Road and north City boundary; Lincoln Avenue between Los Alamos Road and California Oaks Road; Vista Murrieta from Monroe Avenue to Los Alamos Road; and Greer Road between Clinton Keith Road the Greer Ranch Entry Gate – all modeled as Collectors;
- McElwain Road between Clinton Keith Road and Linnel Lane – modeled as Secondary
- Linnel Lane between Meadowlark Road and City boundary; Somers Road between old Antelope Road and Antelope Road; Keller Road between Menifee Road and Briggs Road – all modeled as Secondaries;
- Ruth Ellen Way between Whitewood Road and Los Alamos Road; Los Alamos Road from east of Whitewood Road to south of Clinton Keith Road; Via Mira Mosa between Winchester Road and Hunter Road; Liberty Road south of Clinton Keith Road – all modeled as Collectors.

Other than the extension of Whitewood Road between Jackson Avenue and Murrieta Hot Springs Road, the buildout model network is consistent throughout all buildout scenarios. The resultant travel demand model volumes were post-processed to obtain roadway link and intersection volumes. The number of travel lanes in the buildout model is shown in **Figure 9**.

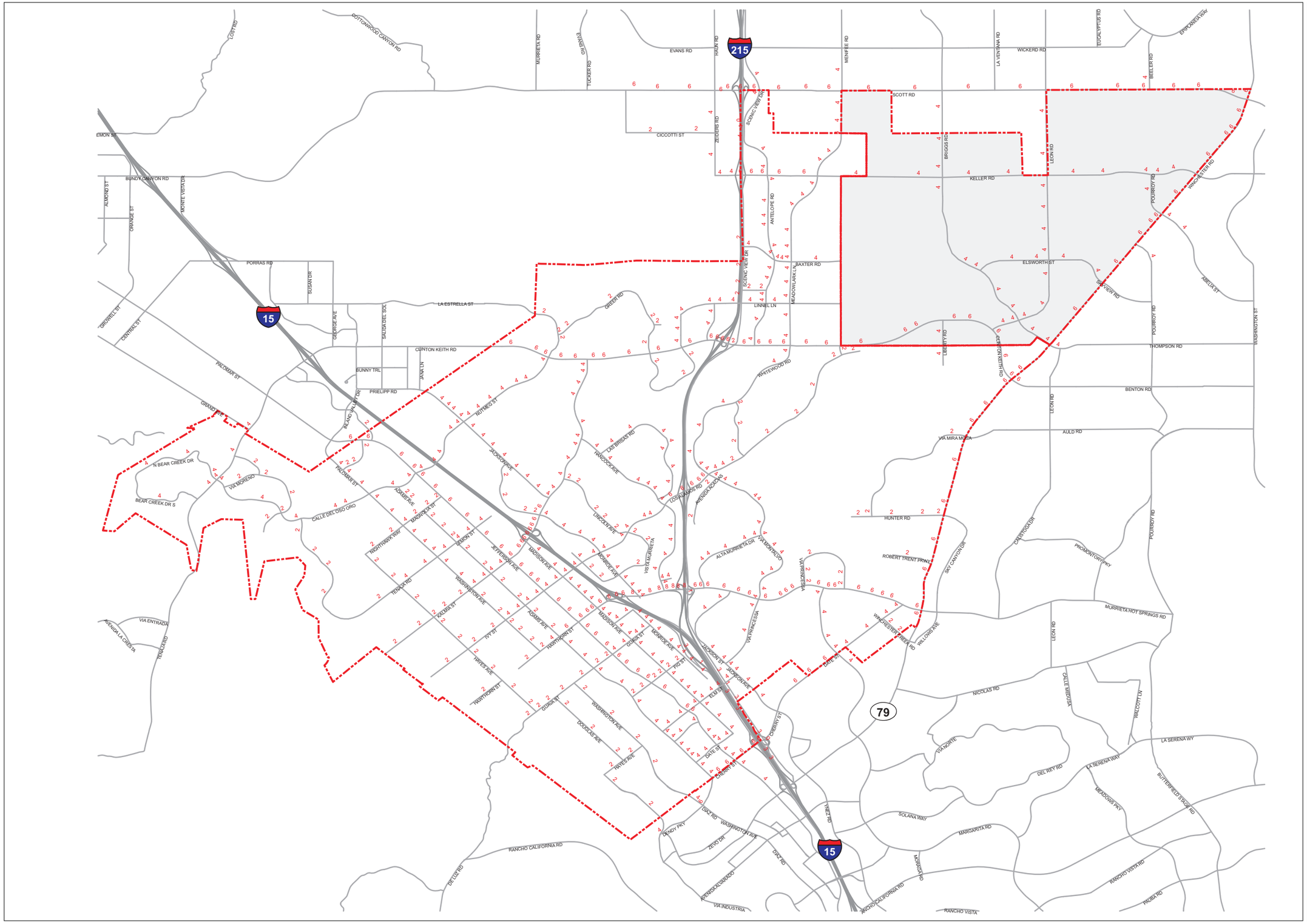

LEGEND

4 Future Number of Lanes (2-Way)

City of Murrieta Boundary

Sphere of Influence

0 1 2 Miles

ITERIS

11/09 JN 10-106976

Future Roadway Lanes

Figure 9

For intersections, the buildout intersection lane configurations incorporate the General Plan buildout number of through lanes; and assume a separate left turn lane and a shared right turn lane. If intersections, or legs of intersections, have already been built to their maximum configuration or already designed; these lanes were incorporated.

As part of improvements planned for the I-15 Southbound off-ramp at Kalmia Street/California Oaks Road, the southbound ramp will be relocated opposite Madison Avenue. Therefore, the levels of service for the Madison Avenue at Kalmia Street intersection is not shown in future level of service tables.

The intersection lane configurations used for the analysis of the three buildout scenarios is shown in **Figure 10**. Intersection traffic control assumed for future conditions is shown in **Table 10**.

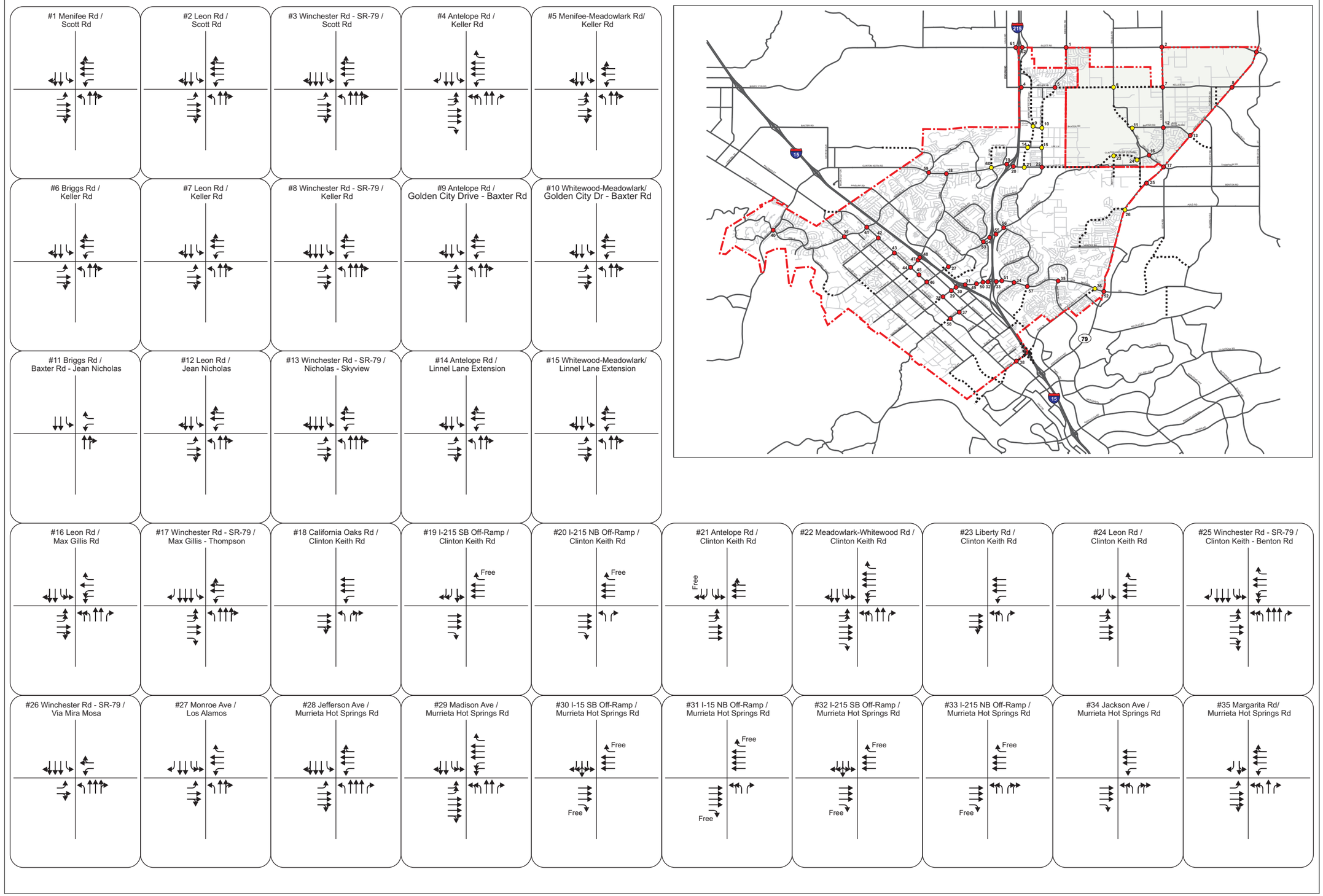

Murrieta General Plan Update

LEGEND

- Through Lane
- Turn Lane
- Shared Lane
- * Assumed Lane Configuration

ITERIS

Future 2035 Lane Configurations

Figure 10A

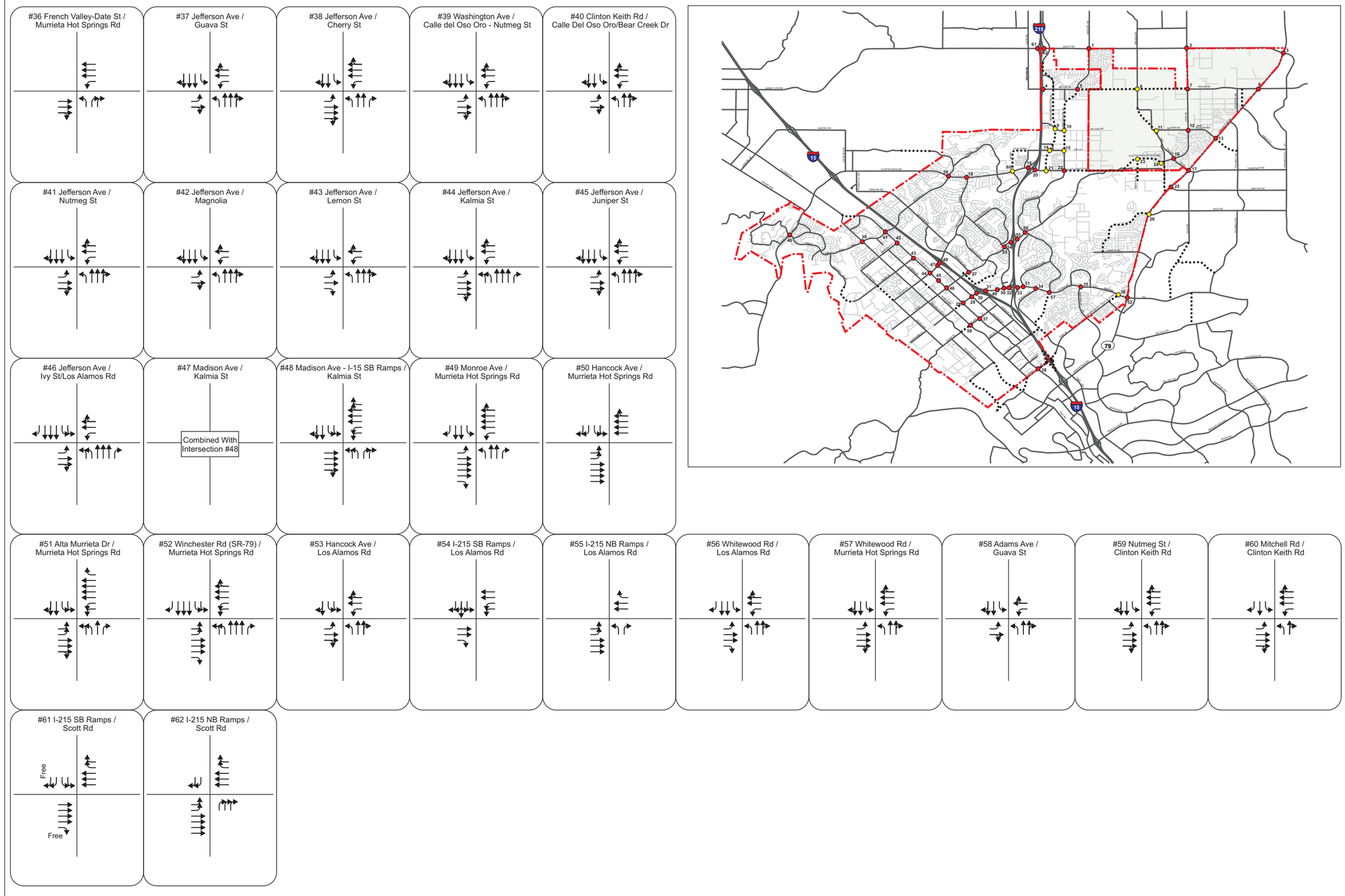

Murrieta
the future of southern california
General Plan Update

LEGEND

- Through Lane
- Turn Lane
- Shared Lane
- * Assumed Lane Configuration

ITERIS

Future 2035 Lane Configurations

Figure 10B

TABLE 10 – FUTURE INTERSECTION TRAFFIC CONTROL

Int. No.	Intersection	Future Traffic Control
1	Menifee Rd / Scott Rd	Signalized
2	Leon Rd / Scott Rd	Signalized
3	Winchester Rd - SR-79 / Scott Rd	Signalized
4	Antelope Rd / Keller Rd	Signalized
5	Menifee-Meadowlark Rd/ Keller Rd	Signalized
6	Briggs Rd / Keller Rd	Signalized
7	Leon Rd / Keller Rd	Signalized
8	Winchester Rd - SR-79 / Keller Rd	Signalized
9	Antelope Rd / Golden City Drive – Baxter Rd	Signalized
10	Whitewood-Meadowlark/ Golden City Dr – Baxter Rd	Signalized
11	Briggs Rd / Baxter Rd – Jean Nicholas	Signalized
12	Leon Rd / Jean Nicholas	Signalized
13	Winchester Rd - SR-79 / Nicholas - Skyview	Signalized
14	Antelope Rd / Linnel Lane Extension	Signalized
15	Whitewood-Meadowlark/ Linnel Lane Extension	Signalized
16	Leon Rd / Max Gillis Rd	Signalized
17	Winchester Rd - SR-79 / Max Gillis - Thompson	Signalized
18	California Oaks Rd / Clinton Keith Rd	Signalized
19	I-215 SB Off-Ramp / Clinton Keith Rd	Signalized
20	I-215 NB Off-Ramp / Clinton Keith Rd	Signalized
21	Antelope Rd / Clinton Keith Rd	Signalized
22	Meadowlark – Whitewood Rd / Clinton Keith Rd	Signalized
23	Liberty Rd / Clinton Keith Rd	Signalized
24	Leon Rd / Clinton Keith Rd	Signalized
25	Winchester Rd - SR-79 / Benton Rd	Signalized
26	Winchester Rd - SR-79 / Via Mira Mosa – Auld Rd	Signalized
27	Monroe Ave / Los Alamos	Signalized
28	Jefferson Ave / Murrieta Hot Springs Rd	Signalized
29	Madison Ave / Murrieta Hot Springs Rd	Signalized
30	I-15 SB Off-Ramp / Murrieta Hot Springs Rd	Signalized
31	I-15 NB Off-Ramp / Murrieta Hot Springs Rd	Signalized
32	I-215 SB Off-Ramp / Murrieta Hot Springs Rd	Signalized
33	I-215 NB Off-Ramp / Murrieta Hot Springs Rd	Signalized
34	Jackson Ave / Murrieta Hot Springs Rd	Signalized
35	Margarita Rd/ Murrieta Hot Springs Rd	Signalized
36	French Valley – Date St / Murrieta Hot Springs Rd	Signalized
37	Jefferson Ave / Guava St	Signalized
38	Jefferson Ave / Cherry St	Signalized
39	Washington Ave / Calle del Oso Oro – Nutmeg St	Signalized
40	Clinton Keith Rd / Calle de Oso Oro – Bear Creek Dr	Signalized
41	Jefferson Ave / Nutmeg St	Signalized
42	Jefferson Ave / Magnolia St	Signalized
43	Jefferson Ave / Lemon St	Signalized
44	Jefferson Ave / Kalmia St	Signalized
45	Jefferson Ave / Juniper St	Signalized

Int. No.	Intersection	Future Traffic Control
46	Jefferson Ave / Ivy St – Los Alamos Rd	Signalized
47	Madison Ave / Kalmia St	N/A
48	I-15 SB Ramps / Kalmia St	Signalized
49	Monroe Ave / Murrieta Hot Springs Rd	Signalized
50	Hancock Ave / Murrieta Hot Springs Rd	Signalized
51	Alta Murrieta Dr / Murrieta Hot Springs Rd	Signalized
52	Winchester Rd - SR-79 / Murrieta Hot Springs Rd	Signalized
53	Hancock Ave / Los Alamos Rd	Signalized
54	I-215 SB Ramps / Los Alamos Rd	Signalized
55	I-215 NB Ramps / Los Alamos Rd	Signalized
56	Whitewood Rd / Los Alamos Rd	Signalized
57	Whitewood Rd / Murrieta Hot Springs Rd	Signalized
58	Adams Ave / Guava St	Signalized
59	Nutmeg St / Clinton Keith Rd	Signalized
60	Mitchell Rd / Clinton Keith Rd	Signalized
61	I-215 SB Ramps / Scott Rd	Signalized
62	I-215 NB Ramps / Scott Rd	Signalized

4.1 EXISTING GENERAL PLAN BUILDOUT SCENARIO

Levels of service associated with the buildout of the Existing General Plan were calculated for both roadway links and intersections. Two scenarios were modeled: without the extension of Whitewood Road between Jackson Avenue and Murrieta Hot Springs Road in place; and with the extension of Whitewood Road between Jackson Avenue and Murrieta Hot Springs Road in place.

4.1.1 *ROADWAY LOS WITHOUT WHITEWOOD ROAD EXTENSION*

Using the Existing General Plan buildout scenario daily traffic volumes (shown in **Figure 11**) and the maximum daily roadway capacity values, daily volume-to-capacity ratios have been determined for the scenario without the Whitewood Road extension. The following roadway segments are projected to operate at an unacceptable level of service (LOS D, E or F) per the City of Murrieta's Level of Service standards. The daily volume-to-capacity ratios are shown in **Figure 12**.

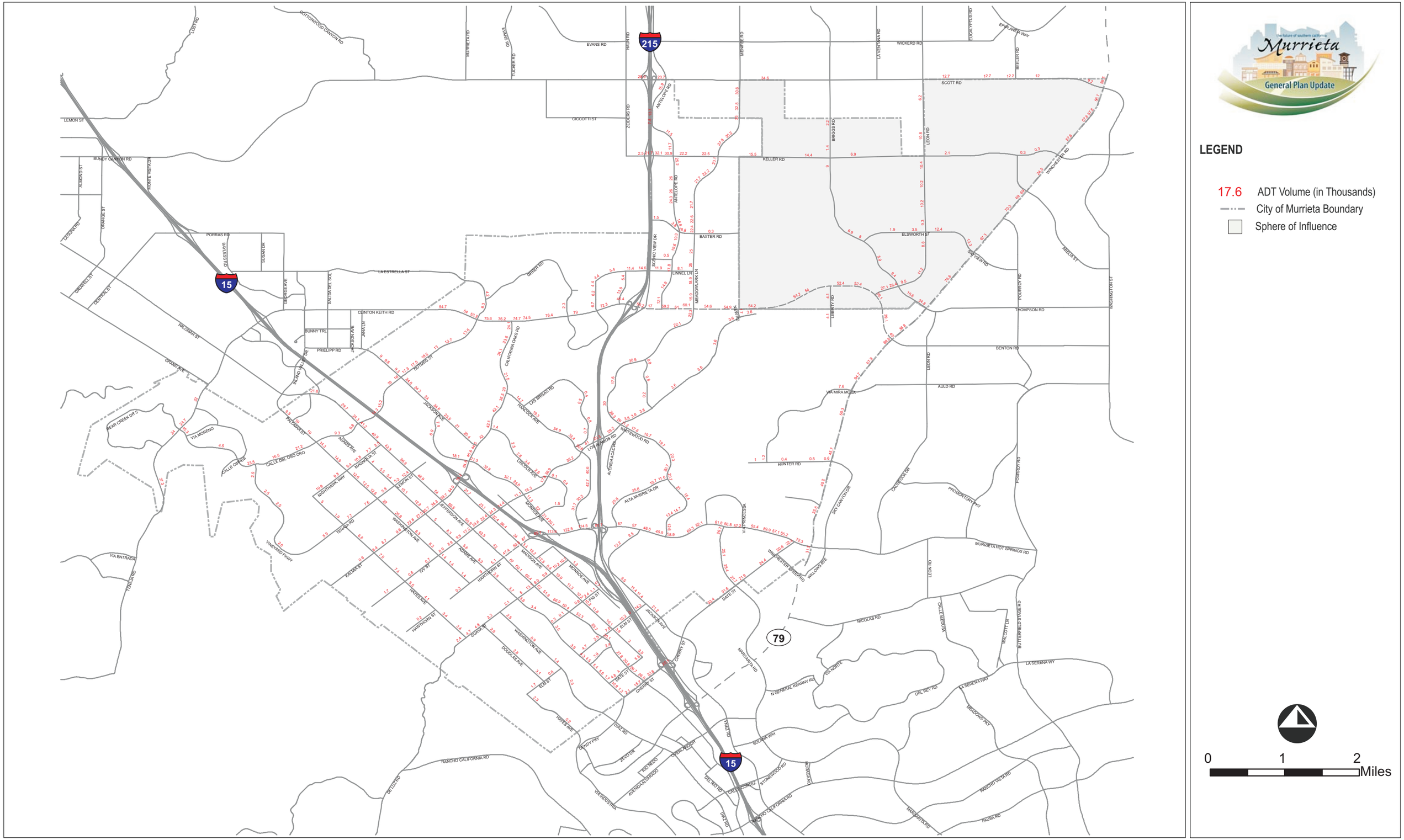

2035 Average Daily Traffic Volumes - Existing General Plan (Without Whitewood Rd Extension)

ITERIS

11/09 JN 10-106976

Figure 11

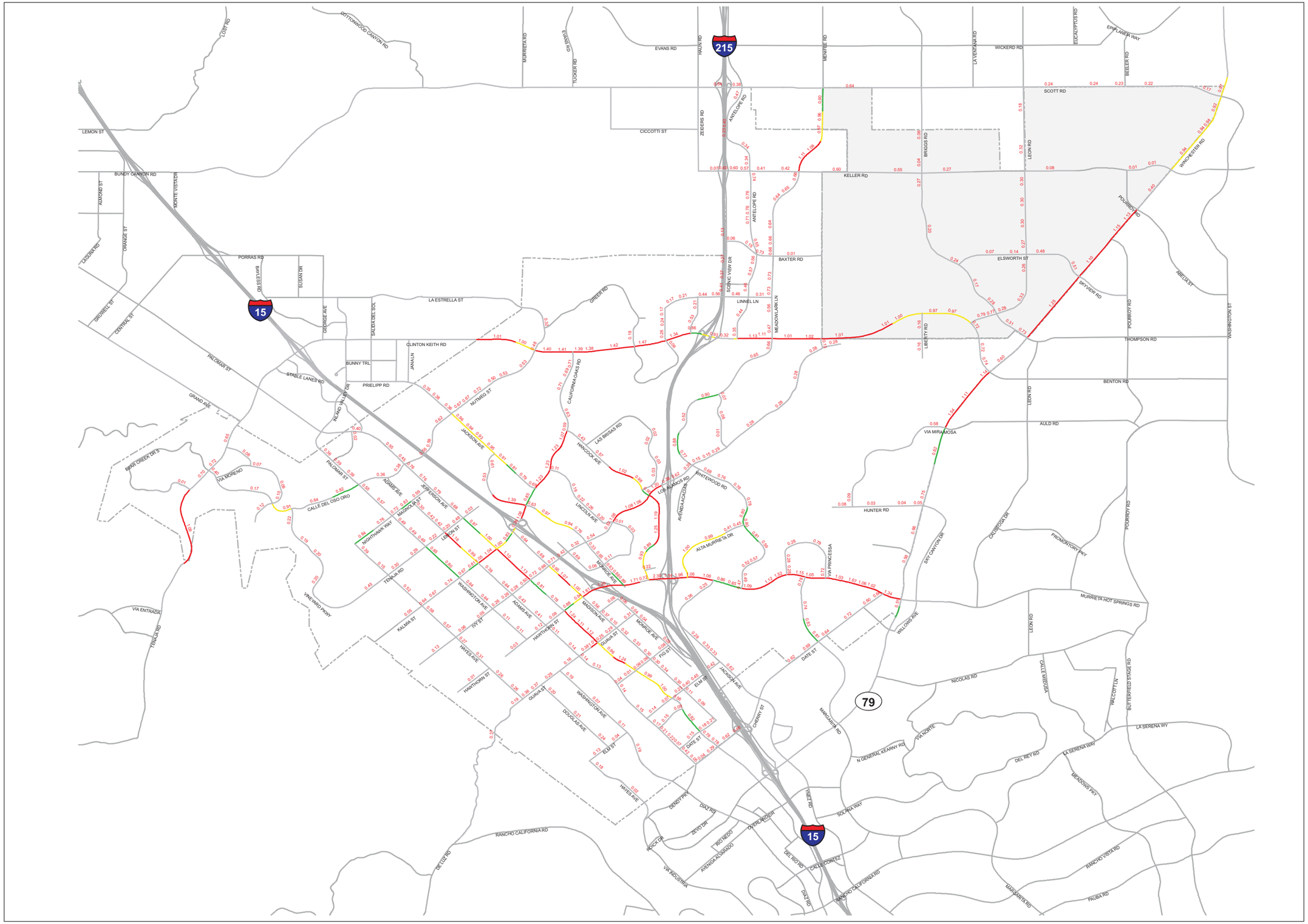

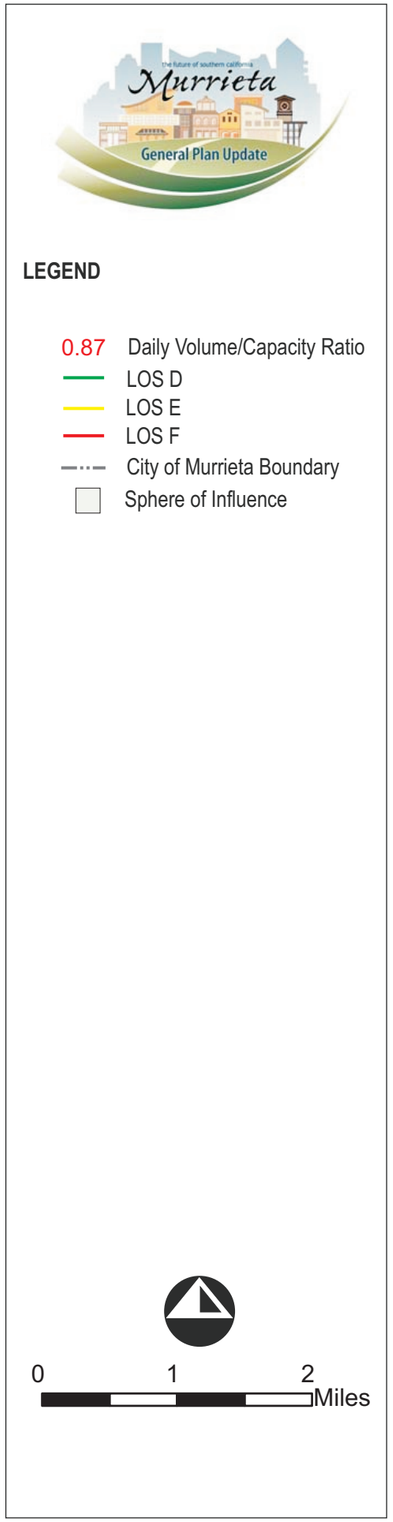

ITERIS

11/09 JN 10-106976

2035 Daily Volume-to-Capacity Ratios - Existing General Plan (Without Whitewood Rd Extension)

Figure 12

Level of Service D

- Portions of Jefferson Avenue, Whitewood Road, Winchester Road, and Washington Avenue, among others

Level of Service E

- Portions of Jefferson Avenue, Monroe Avenue, Jackson Avenue, Alta Murrieta Drive, and Clinton Keith Road, among others.

LOS F

- Portions of Jefferson Avenue, Clinton Keith Road, California Oaks Road, Los Alamos Road, Hancock Avenue, Winchester Road, Menifee Road, and Kalmia Street, among others.

4.1.2 *Roadway LOS With Whitewood Road Extension*

Using the Existing General Plan buildout scenario daily traffic volumes (shown in **Figure 13**) and the maximum daily roadway capacity values, daily volume-to-capacity ratios have been determined for the scenario with the Whitewood Road extension in place. The following roadway segments are projected to operate at an unacceptable level of service (LOS D, E or F) per the City of Murrieta's Level of Service standards. The daily volume-to-capacity ratios are shown in **Figure 14**.

A comparison of the Existing General Plan With and Without the Whitewood Road Extension can be used show how traffic volumes change with the roadway extension. With the extension in place, roadway levels of service are projected to be higher on portions of Murrieta Hot Spring Road, California Oaks Road, Hancock Road and Alta Murrieta Road, among others. Without the extension in place, roadway levels of service are projected to be lower, or improved (than if the extension was in place), on portions of Winchester Road.

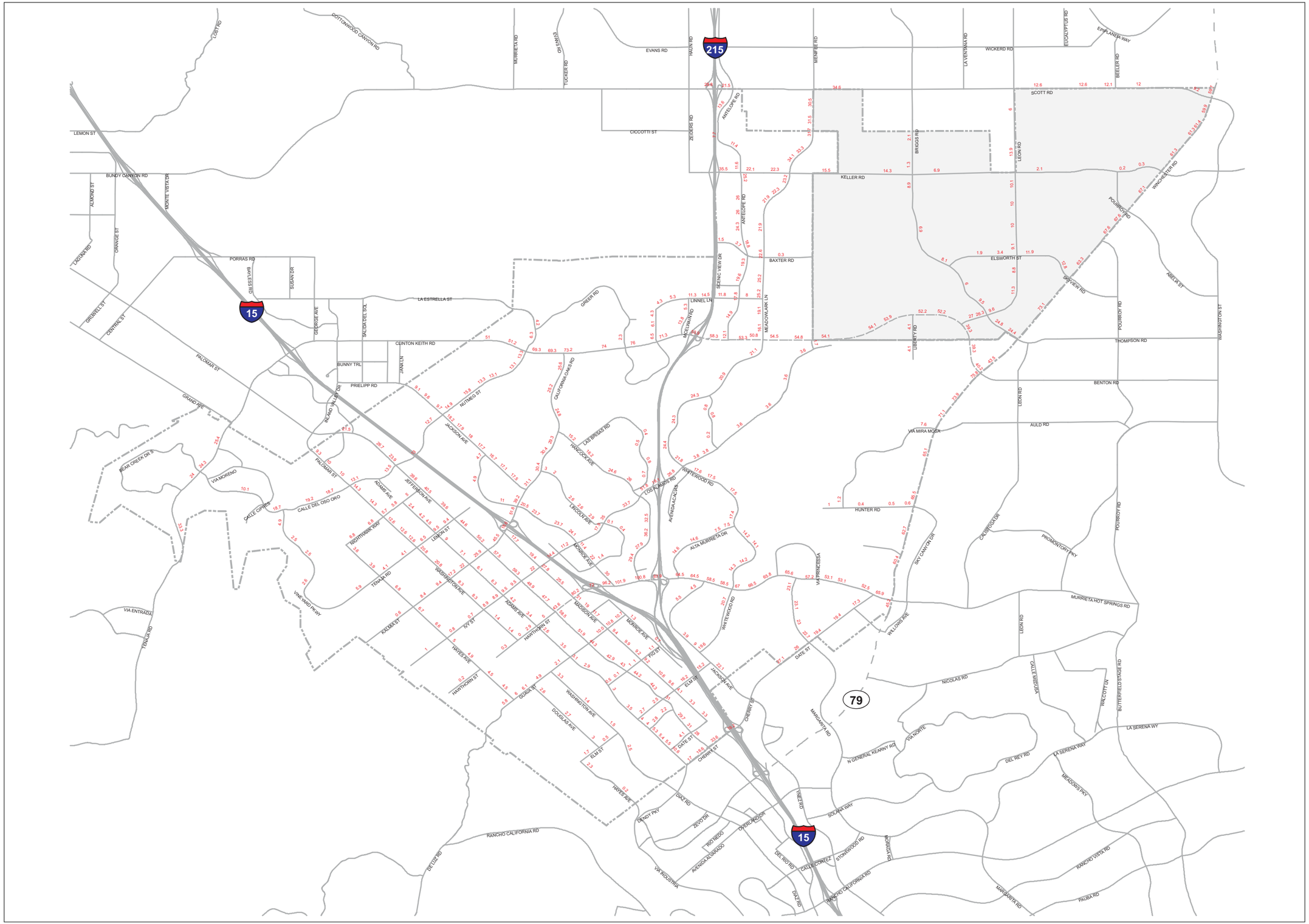

LEGEND

17.6 ADT Volume (in Thousands)

City of Murrieta Boundary

Sphere of Influence

0 1 2 Miles

ITERIS

11/09 JN 10-106976

2035 Average Daily Traffic Volumes - Existing General Plan

Figure 13

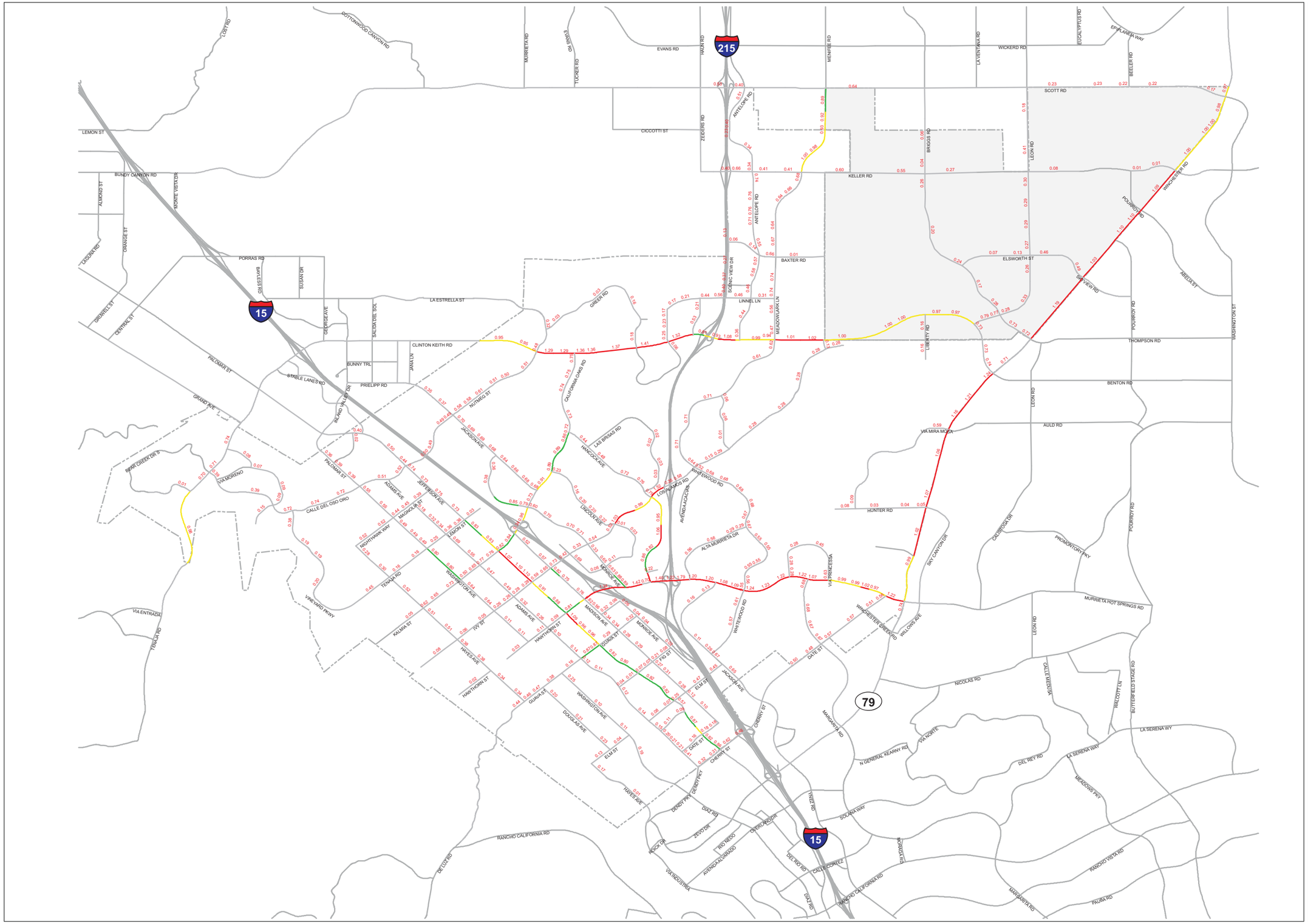

LEGEND

- 0.87 Daily Volume/Capacity Ratio
- LOS D
- LOS E
- LOS F
- City of Murrieta Boundary
- Sphere of Influence

0 1 2 Miles

ITERIS

11/09 JN 10-106976

2035 Daily Volume-to-Capacity Ratios - Existing General Plan

Figure 14

Level of Service D

- Portions of Madison Avenue, Jefferson Avenue, Guava Street, Hancock Avenue, California Oaks Road, and Monroe Avenue, among others.

Level of Service E

- Portions of Jefferson Avenue, California Oaks Road, Clinton Keith Road, Murrieta Hot Springs Road, Winchester Road, Menifee Road, and Hancock Road, among others.

LOS F

- Portions of Murrieta Hot Springs Road, Jefferson Avenue, Clinton Keith Road, Winchester Road, Los Alamos Road, among others.

4.1.3 *INTERSECTION LOS*

Existing General Plan Buildout Scenario traffic volumes are illustrated in **Figure 15**. **Table 11** provides the level of service results for the 61 future study intersections. As shown, all future study areas are projected to operate at level of service of LOS D or better except at the following twelve locations:

1 Menifee Rd / Scott Rd
3 Winchester Rd - SR-79 / Scott Rd
4 Antelope Rd / Keller Rd
10 Whitewood-Meadowlark/ Golden City Dr – Baxter Rd
20 I-215 NB Off-Ramp / Clinton Keith Rd
22 Meadowlark – Whitewood Rd / Clinton Keith Rd
25 Winchester Rd - SR-79 / Benton Rd
28 Jefferson Ave / Murrieta Hot Springs Rd
29 Madison Ave / Murrieta Hot Springs Rd
44 Jefferson Ave / Kalmia St
52 Winchester Rd (SR-79) / Murrieta Hot Springs Rd
53 Hancock Ave / Los Alamos Rd
54 I-215 SB Ramps / Los Alamos Rd
57 Whitewood Rd / Murrieta Hot Springs Rd
59 Nutmeg St / Clinton Keith Rd

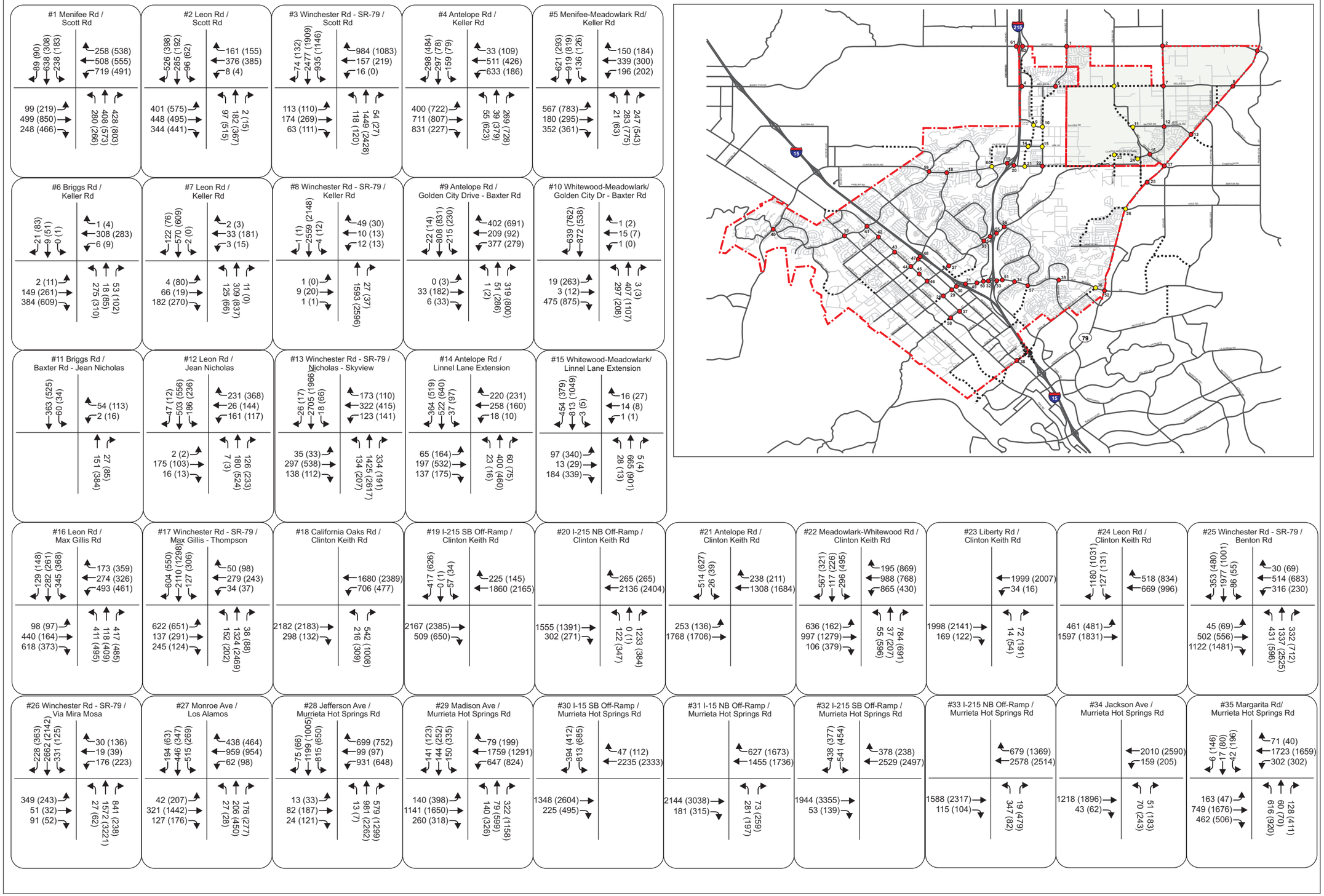

LEGEND

- Existing Study Intersection
- Future Study Intersection
- City of Murrieta Boundary
- Sphere of Influence
- Future Roadway Alignment
- 31/20 AM Peak Hr/PM Peak Hr

2035 Peak Hour Turning Movement Volumes - Existing General Plan

Figure 15A

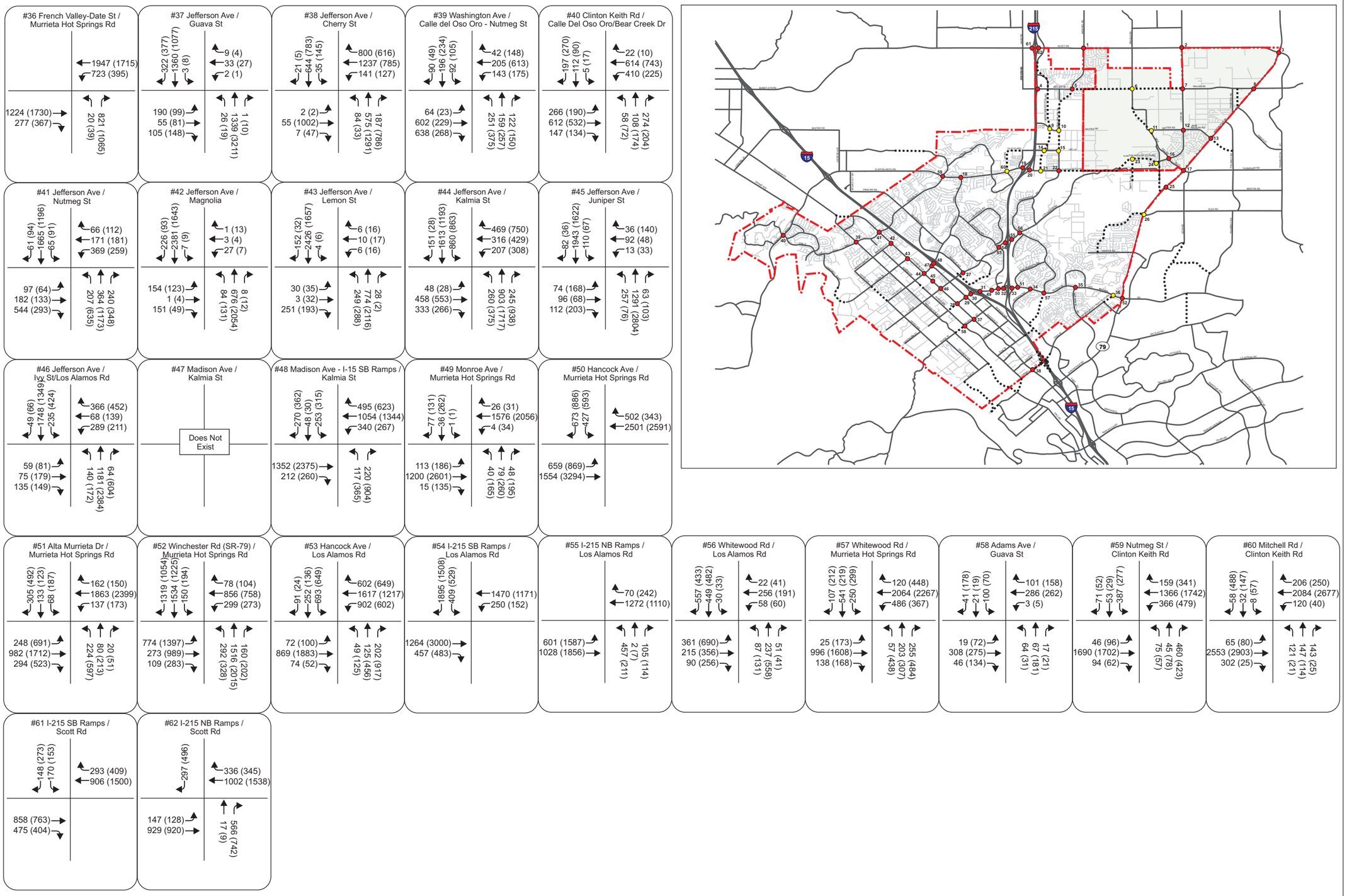

Murrieta General Plan Update

LEGEND

- Existing Study Intersection
- Future Study Intersection
- City of Murrieta Boundary
- Sphere of Influence
- Future Roadway Alignment
- 31/20 AM Peak Hr/PM Peak Hr

2035 Peak Hour Turning Movement Volumes - Existing General Plan

Figure 15B

TABLE 11 – EXISTING GENERAL PLAN BUILDOUT LEVEL OF SERVICE

Int. No.	Intersection	AM Peak Hour		PM Peak Hour	
		LOS	Ave Del/Veh	LOS	Ave Del/Veh
1	Menifee Rd / Scott Rd	D	47.3	E	72.8
2	Leon Rd / Scott Rd	C	28.5	D	45.9
3	Winchester Rd - SR-79 / Scott Rd	F	177.0	F	287.5
4	Antelope Rd / Keller Rd	E	66.4	D	35.1
5	Menifee-Meadowlark Rd/ Keller Rd	C	30.6	C	33.1
6	Briggs Rd / Keller Rd	B	16.9	B	19.0
7	Leon Rd / Keller Rd	B	16.6	B	16.0
8	Winchester Rd - SR-79 / Keller Rd	A	1.4	A	1.2
9	Antelope Rd / Golden City Drive – Baxter Rd	B	16.8	D	39.2
10	Whitewood-Meadowlark/ Golden City Dr – Baxter Rd	D	37.0	E	65.7
11	Briggs Rd / Baxter Rd – Jean Nicholas	B	11.0	B	10.5
12	Leon Rd / Jean Nicholas	C	23.0	C	23.3
13	Winchester Rd - SR-79 / Nicholas - Skyview	B	18.8	C	24.6
14	Antelope Rd / Linnel Lane Extension	B	19.4	C	22.1
15	Whitewood-Meadowlark/ Linnel Lane Extension	B	10.1	B	15.8
16	Leon Rd / Max Gillis Rd	D	38.0	C	32.8
17	Winchester Rd - SR-79 / Max Gillis - Thompson	C	25.1	D	35.3
18	California Oaks Rd / Clinton Keith Rd	C	32.7	C	20.6
19	I-215 SB Off-Ramp / Clinton Keith Rd	A	8.2	B	12.2
20	I-215 NB Off-Ramp / Clinton Keith Rd	F	83.2	B	13.4
21	Antelope Rd / Clinton Keith Rd	A	4.3	A	2.7
22	Meadowlark – Whitewood Rd / Clinton Keith Rd	D	54.9	E	62.9
23	Liberty Rd / Clinton Keith Rd	A	2.5	A	6.2
24	Leon Rd / Clinton Keith Rd	B	19.3	C	20.7
25	Winchester Rd - SR-79 / Benton Rd	D	41.0	E	63.2
26	Winchester Rd - SR-79 / Via Mira Mosa – Auld Rd	C	24.1	C	27.7
27	Monroe Ave / Los Alamos	C	23.9	C	28.0
28	Jefferson Ave / Murrieta Hot Springs Rd	F	116.4	F	173.6
29	Madison Ave / Murrieta Hot Springs Rd	C	26.2	F	128.8
30	I-15 SB Off-Ramp / Murrieta Hot Springs Rd	B	16.0	B	14.4
31	I-15 NB Off-Ramp / Murrieta Hot Springs Rd	A	5.8	A	8.2
32	I-215 SB Off-Ramp / Murrieta Hot Springs Rd	B	12.4	B	10.6
33	I-215 NB Off-Ramp / Murrieta Hot Springs Rd	A	5.6	A	9.5
34	Jackson Ave / Murrieta Hot Springs Rd	A	5.3	A	9.1
35	Margarita Rd/ Murrieta Hot Springs Rd	C	24.4	D	50.5
36	French Valley – Date St / Murrieta Hot Springs Rd	B	12.7	B	17.6
37	Jefferson Ave / Guava St	A	9.8	A	7.9
38	Jefferson Ave / Cherry St	C	21.0	C	30.7
39	Washington Ave / Calle del Oso Oro – Nutmeg St	C	26.5	C	27.2
40	Clinton Keith Rd / Calle de Oso Oro – Bear Creek Dr	C	21.5	B	16.2
41	Jefferson Ave / Nutmeg St	D	52.0	D	37.6
42	Jefferson Ave / Magnolia	B	10.4	A	7.8
43	Jefferson Ave / Lemon St	B	18.2	B	13.7

Int. No.	Intersection	AM Peak Hour		PM Peak Hour	
		LOS	Ave Del/Veh	LOS	Ave Del/Veh
44	Jefferson Ave / Kalmia St	D	43.2	F	129.1
45	Jefferson Ave / Juniper St	B	15.5	B	15.5
46	Jefferson Ave / Ivy St – Los Alamos Rd	C	24.1	C	30.9
47	Madison Ave / Kalmia St	N/A	N/A	N/A	N/A
48	I-15 SB Ramps / Kalmia St	C	29.0	C	30.4
49	Monroe Ave / Murrieta Hot Springs Rd	A	7.9	B	16.4
50	Hancock Ave / Murrieta Hot Springs Rd	B	17.7	B	19.0
51	Alta Murrieta Dr / Murrieta Hot Springs Rd	C	23.7	D	53.7
52	Winchester Rd (SR-79) / Murrieta Hot Springs Rd	F	90.6	F	91.7
53	Hancock Ave / Los Alamos Rd	E	64.0	F	224.1
54	I-215 SB Ramps / Los Alamos Rd	E	58.3	F	145.6
55	I-215 NB Ramps / Los Alamos Rd	C	26.1	C	23.1
56	Whitewood Rd / Los Alamos Rd	C	26.5	C	29.5
57	Whitewood Rd / Murrieta Hot Springs Rd	C	27.8	E	67.7
58	Adams Ave / Guava St	B	11.5	B	13.3
59	Nutmeg St / Clinton Keith Rd	E	60.8	D	51.6
60	Mitchell Rd / Clinton Keith Rd	B	14.6	C	26.2
61	I-215 SB Ramps / Scott Rd	A	7.3	A	8.4
62	I-215 NB Ramps / Scott Rd	B	15.9	B	16.2

4.2 RECOMMENDED SCENARIO (PROPOSED GENERAL PLAN LAND USES)

Levels of service associated with the buildout of the Recommended Land Use scenario were calculated for both roadway links and intersections.

4.2.1 *ROADWAY LOS*

Using the Recommended Scenario daily traffic volumes (shown in **Figure 16**) and the maximum daily roadway capacity values, daily volume-to-capacity ratios have been determined. The following roadway segments are projected to operate at an unacceptable level of service (LOS D, E or F) per the City of Murrieta's Level of Service standards. The daily volume-to-capacity ratios are shown in **Figure 17**.

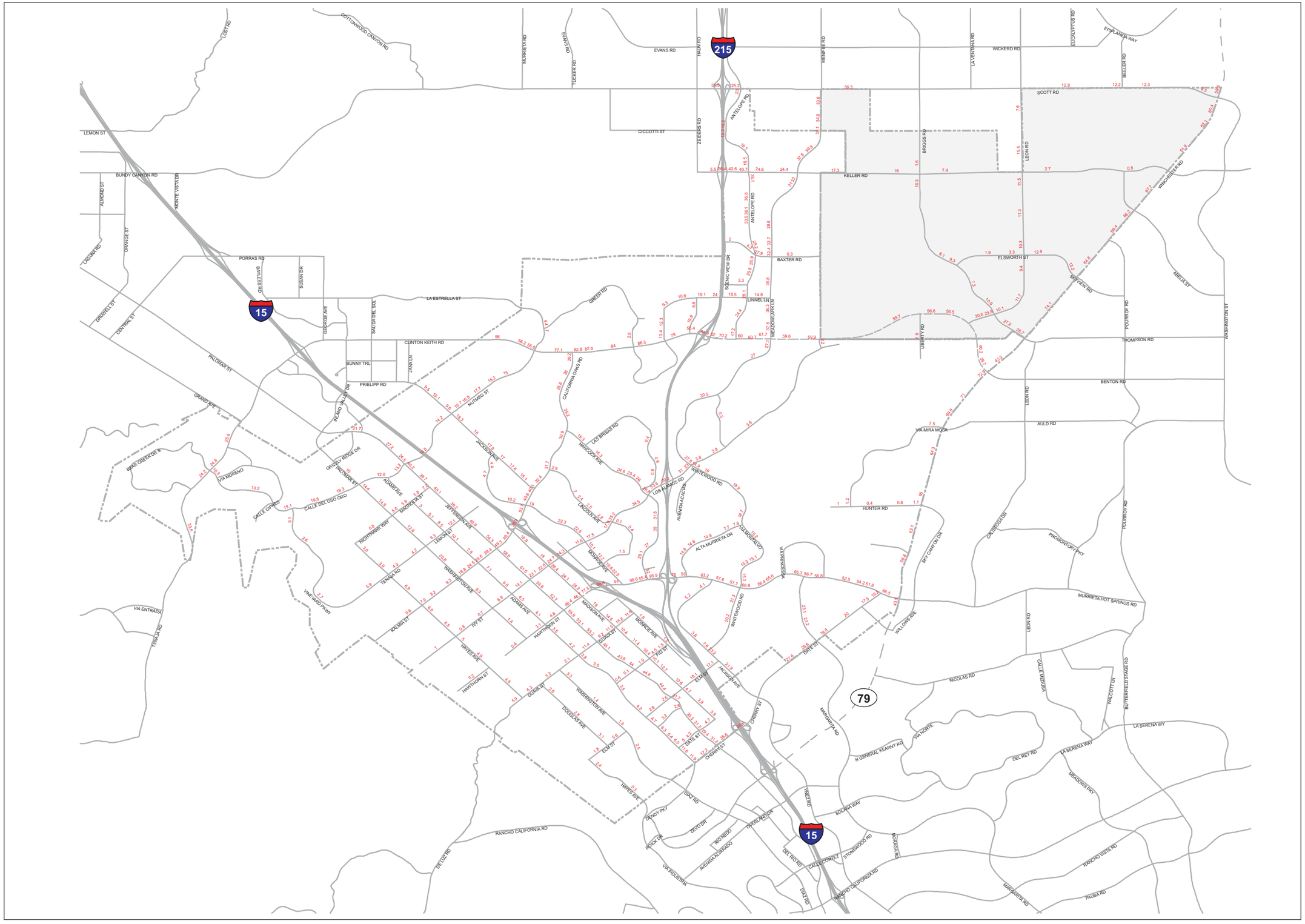

LEGEND

17.6 ADT Volume (in Thousands)

City of Murrieta Boundary

Sphere of Influence

0 1 2 Miles

2035 Average Daily Traffic Volumes - Recommended Scenario

ITERIS

11/09 JN 10-106976

Figure 16

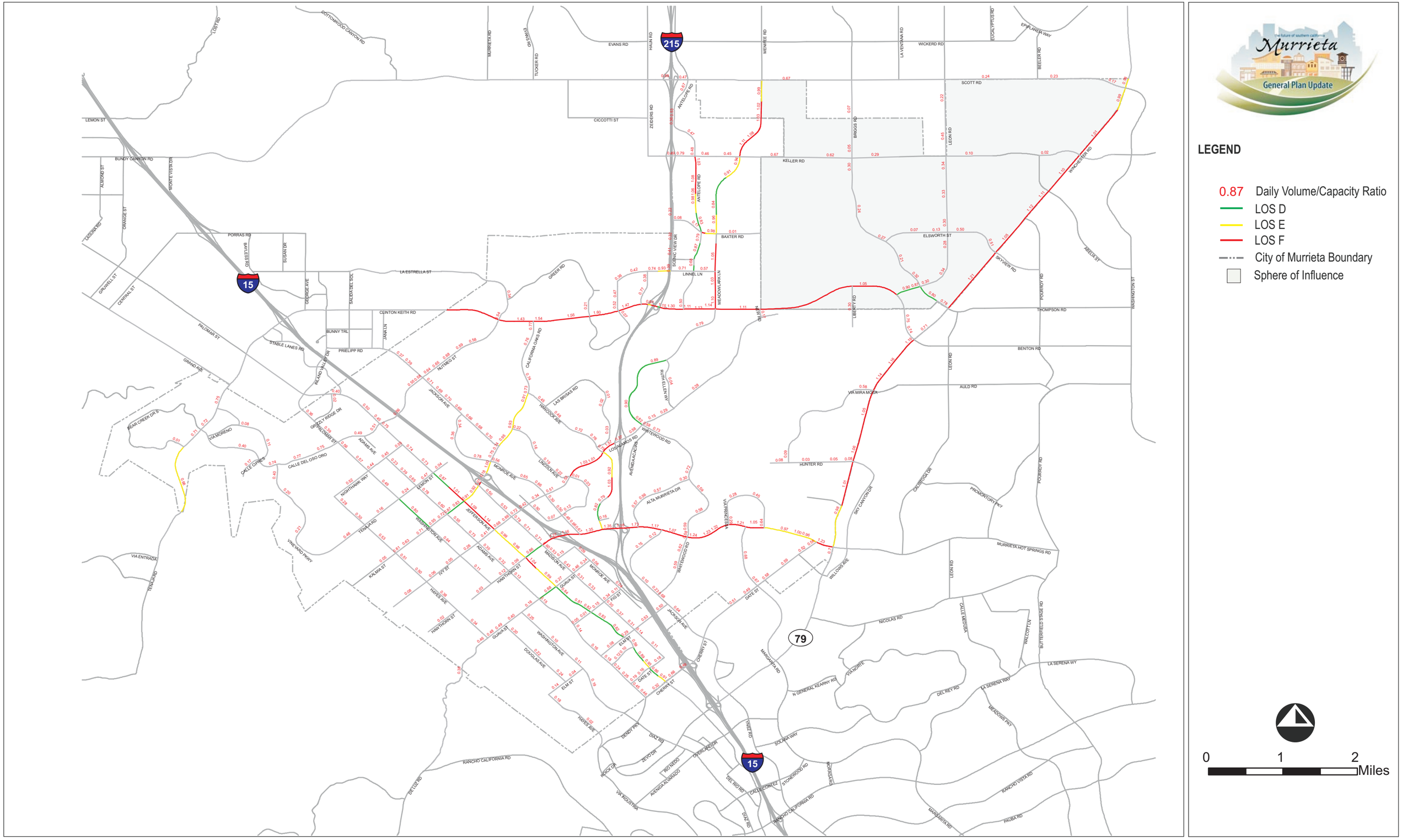

2035 Daily Volume-to-Capacity Ratios - Recommended Scenario

ITERIS

11/09 JN 10-106976

Figure 17

Level of Service D

- Portions of Jefferson Avenue, Washington Avenue, Meadowlark Lane/Menifee Road, Leon Road, and Whitewood Road, among others.

Level of Service E

- Portions of Jefferson Avenue, California Oaks Road, Murrieta Hot Springs Road, Clinton Keith Road, Hancock Avenue, and Meadowlark Lane/Menifee Road, among others.

LOS F

- Portions of Jefferson Avenue, Los Alamos Road, Clinton Keith Road, Winchester Road, Murrieta Hot Springs Road, Meadowlark Lane/Menifee Road, and Antelope Road, among others.

4.2.2 *INTERSECTION LOS*

The Recommended Scenario peak hour traffic volumes are illustrated in **Figure 18**. **Table 12** provides the level of service results for the 61 study intersections. As shown, all 61 study intersections are projected to operate at level of service of LOS D or better, except for the following 18 locations.

1 Menifee Rd / Scott Rd
3 Winchester Rd - SR-79 / Scott Rd
4 Antelope Rd / Keller Rd
5 Menifee-Meadowlark Rd/ Keller Rd
9 Antelope Rd / Golden City Drive – Baxter Rd
10 Whitewood-Meadowlark/ Golden City Dr – Baxter Rd
18 California Oaks Rd / Clinton Keith Rd
20 I-215 NB Off-Ramp / Clinton Keith Rd
22 Meadowlark – Whitewood Rd / Clinton Keith Rd
28 Jefferson Ave / Murrieta Hot Springs Rd
29 Madison Ave / Murrieta Hot Springs Rd
44 Jefferson Ave / Kalmia St
52 Winchester Rd (SR-79) / Murrieta Hot Springs Rd
53 Hancock Ave / Los Alamos Rd
54 I-215 SB Ramps / Los Alamos Rd
57 Whitewood Rd / Murrieta Hot Springs Rd
59 Nutmeg St / Clinton Keith Rd
60 Mitchell Rd / Clinton Keith Rd

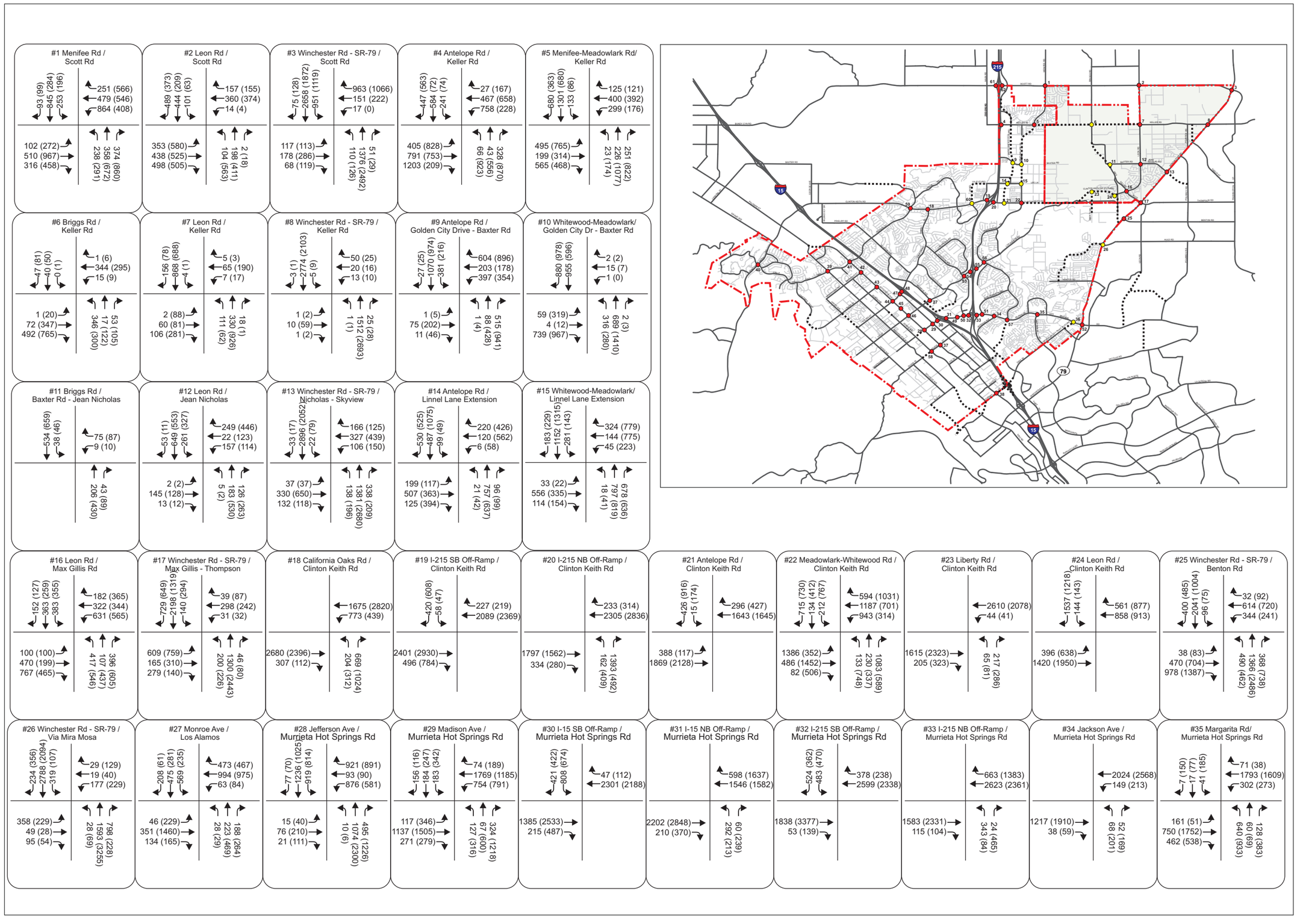

2035 Peak Hour Turning Movement Volumes - Recommended Scenario

Figure 18A

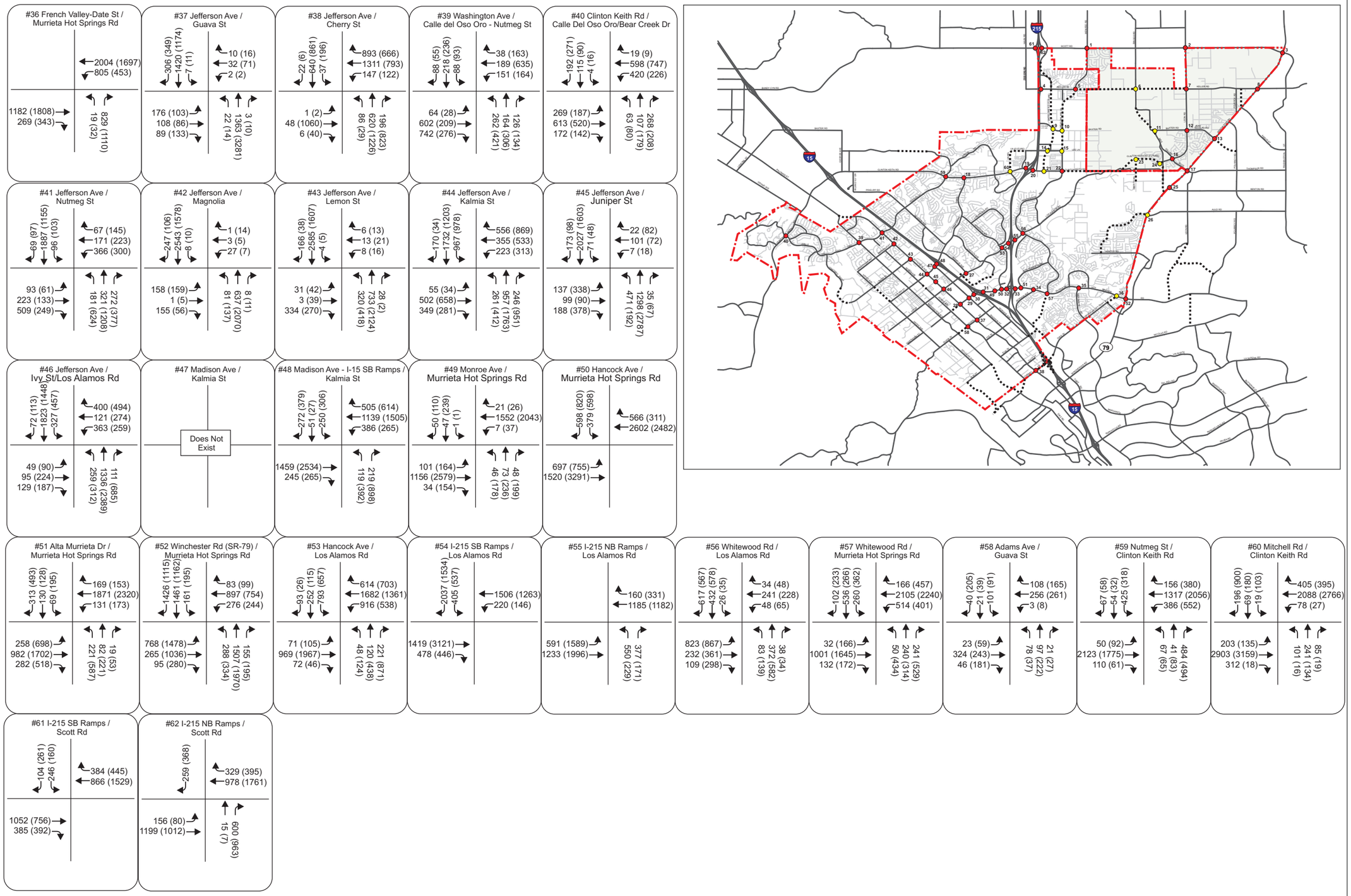

LEGEND

- Existing Study Intersection
- Future Study Intersection
- City of Murrieta Boundary
- Sphere of Influence
- Future Roadway Alignment
- 31/20 AM Peak Hr/PM Peak Hr

2035 Peak Hour Turning Movement Volumes - Recommended Scenario

Figure 18B

TABLE 12 – RECOMMENDED SCENARIO LEVEL OF SERVICE

Int. No.	Intersection	AM Peak Hour		PM Peak Hour	
		LOS	Ave Del/Veh	LOS	Ave Del/Veh
1	Menifee Rd / Scott Rd	E	68.3	F	86.3
2	Leon Rd / Scott Rd	C	27.9	D	46.7
3	Winchester Rd - SR-79 / Scott Rd	F	177.4	F	284.5
4	Antelope Rd / Keller Rd	F	158.6	D	49.9
5	Menifee-Meadowlark Rd/ Keller Rd	E	68.8	D	47.6
6	Briggs Rd / Keller Rd	B	18.5	B	19.0
7	Leon Rd / Keller Rd	B	12.3	C	26.2
8	Winchester Rd - SR-79 / Keller Rd	A	1.6	A	1.6
9	Antelope Rd / Golden City Drive – Baxter Rd	C	25.2	F	89.2
10	Whitewood-Meadowlark/ Golden City Dr – Baxter Rd	F	107.7	F	113.6
11	Briggs Rd / Baxter Rd – Jean Nicholas	A	8.8	A	8.3
12	Leon Rd / Jean Nicholas	C	22.1	C	26.4
13	Winchester Rd - SR-79 / Nicholas - Skyview	B	19.7	C	28.5
14	Antelope Rd / Linnel Lane Extension	C	22.1	C	28.5
15	Whitewood-Meadowlark/ Linnel Lane Extension	C	26.0	D	43.7
16	Leon Rd / Max Gillis Rd	D	51.9	D	40.3
17	Winchester Rd - SR-79 / Max Gillis - Thompson	C	27.1	D	37.8
18	California Oaks Rd / Clinton Keith Rd	E	60.7	C	20.7
19	I-215 SB Off-Ramp / Clinton Keith Rd	A	7.9	B	11.5
20	I-215 NB Off-Ramp / Clinton Keith Rd	F	124.7	B	17.1
21	Antelope Rd / Clinton Keith Rd	A	5.1	A	4.5
22	Meadowlark – Whitewood Rd / Clinton Keith Rd	F	145.9	F	121.7
23	Liberty Rd / Clinton Keith Rd	A	7.4	B	10.0
24	Leon Rd / Clinton Keith Rd	C	26.0	C	28.6
25	Winchester Rd - SR-79 / Clinton Keith Rd - Benton Rd	D	38.8	D	53.7
26	Winchester Rd - SR-79 / Via Mira Mosa – Auld Rd	C	24.1	C	25.1
27	Monroe Ave / Los Alamos	C	24.5	C	27.5
28	Jefferson Ave / Murrieta Hot Springs Rd	F	133.3	F	206.4
29	Madison Ave / Murrieta Hot Springs Rd	C	26.6	F	129.6
30	I-15 SB Off-Ramp / Murrieta Hot Springs Rd	B	16.1	B	14.3
31	I-15 NB Off-Ramp / Murrieta Hot Springs Rd	A	5.7	A	7.9
32	I-215 SB Off-Ramp / Murrieta Hot Springs Rd	B	12.5	B	10.8
33	I-215 NB Off-Ramp / Murrieta Hot Springs Rd	A	5.6	A	9.4
34	Jackson Ave / Murrieta Hot Springs Rd	A	5.1	A	8.5
35	Margarita Rd/ Murrieta Hot Springs Rd	C	24.6	D	49.2
36	French Valley – Date St / Murrieta Hot Springs Rd	B	12.9	B	18.4
37	Jefferson Ave / Guava St	A	9.4	A	7.9
38	Jefferson Ave / Cherry St	C	21.8	D	37.8
39	Washington Ave / Calle del Oso Oro – Nutmeg St	C	27.6	C	27.5
40	Clinton Keith Rd / Calle de Oso Oro – Bear Creek Dr	C	23.7	B	16.5
41	Jefferson Ave / Nutmeg St	D	51.1	D	36.0
42	Jefferson Ave / Magnolia	B	10.7	A	9.4
43	Jefferson Ave / Lemon St	C	28.2	B	18.3

Int. No.	Intersection	AM Peak Hour		PM Peak Hour	
		LOS	Ave Del/Veh	LOS	Ave Del/Veh
44	Jefferson Ave / Kalmia St	E	59.3	F	159.9
45	Jefferson Ave / Juniper St	C	23.4	C	22.3
46	Jefferson Ave / Ivy St – Los Alamos Rd	C	26.8	D	35.8
47	Madison Ave / Kalmia St	N/A	N/A	N/A	N/A
48	I-15 SB Ramps / Kalmia St	C	29.4	C	30.9
49	Monroe Ave / Murrieta Hot Springs Rd	A	8.0	B	16.2
50	Hancock Ave / Murrieta Hot Springs Rd	B	17.6	B	17.6
51	Alta Murrieta Dr / Murrieta Hot Springs Rd	C	23.8	D	51.9
52	Winchester Rd (SR-79) / Murrieta Hot Springs Rd	F	107.8	F	104.8
53	Hancock Ave / Los Alamos Rd	F	84.6	F	223.1
54	I-215 SB Ramps / Los Alamos Rd	E	77.2	F	157.8
55	I-215 NB Ramps / Los Alamos Rd	C	25.5	C	24.4
56	Whitewood Rd / Los Alamos Rd	D	44.4	D	44.6
57	Whitewood Rd / Murrieta Hot Springs Rd	C	28.3	F	88.7
58	Adams Ave / Guava St	B	12.2	B	14.3
59	Nutmeg St / Clinton Keith Rd	F	96.5	E	78.4
60	Mitchell Rd / Clinton Keith Rd	C	20.4	F	120.7
61	I-215 SB Ramps / Scott Rd	A	8.5	A	8.1
62	I-215 NB Ramps / Scott Rd	B	15.9	B	16.2

4.3 SCENARIO B (GENERAL PLAN LAND USE ALTERNATIVE)

Analysis of Scenario B was conducted. Scenario B is similar to the Recommended Scenario; the primary differences are additional multi-family housing in the Clinton Keith Road / Mitchell Road and the North Murrieta Business Corridor Focus Areas. Levels of service associated with the buildout of Scenario B were calculated for both roadway links and intersections.

4.3.1 *ROADWAY LOS*

Using the Scenario B daily traffic volumes (shown in **Figure 19**) and the maximum daily roadway capacity values, daily volume-to-capacity ratios have been determined. The following roadway segments are projected to operate at an unacceptable level of service (LOS D, E or F) per the City of Murrieta's Level of Service standards. The daily volume-to-capacity ratios are shown in **Figure 20**.

Level of Service D

- Portions of Washington Avenue, Jefferson Avenue, Kalmia Street, Whitewood Road, Hancock Road, and Menifee Road, among others.

Level of Service E

- Portions of Jefferson Avenue, California Oaks Road, Murrieta Hot Springs Road, Meadowlark Lane/Menifee Road, and Winchester Road, among others.

LOS F

- Portions of Jefferson Avenue, Murrieta Hot Springs Road, Los Alamos Road, Winchester Road, and Clinton Keith Road, among others..

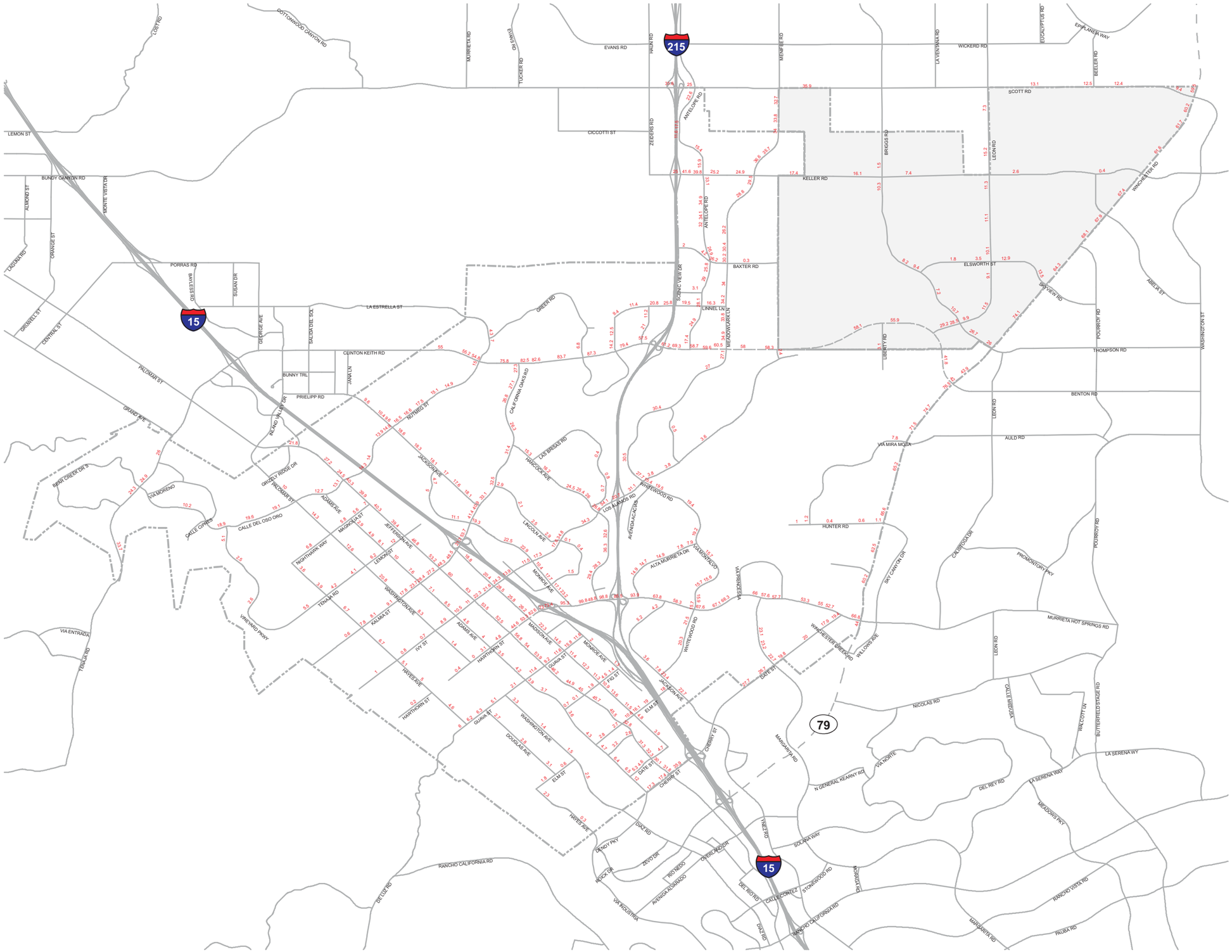

LEGEND

17.6 ADT Volume (in Thousands)

City of Murrieta Boundary

Sphere of Influence

0 1 2 Miles

ITERIS

11/09 JN 10-106976

2035 Average Daily Traffic Volumes - Scenario B

Figure 19

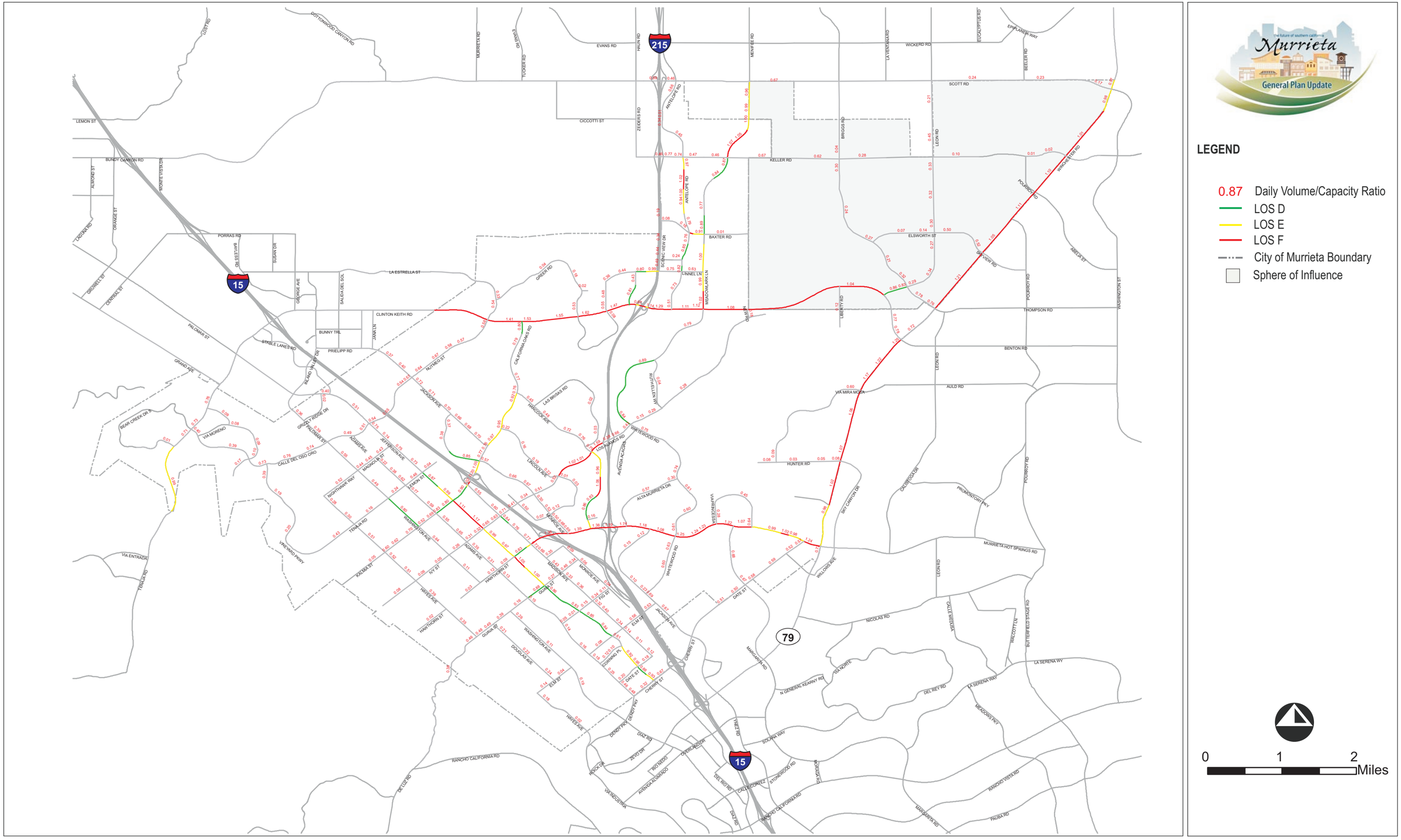

2035 Daily Volume-to-Capacity Ratios - Scenario B

ITERIS

11/09 JN 10-106976

Figure 20

4.3.2 *INTERSECTION LOS*

The Scenario B traffic volumes are illustrated in **Figure 21**. **Table 13** provides the level of service results for the 61 study intersections. As shown, all 61 study intersections are projected to operate at level of service of LOS D or better except for the following 18 locations.

1	Menifee Rd / Scott Rd
3	Winchester Rd - SR-79 / Scott Rd
4	Antelope Rd / Keller Rd
9	Antelope Rd / Golden City Drive – Baxter Rd
10	Whitewood-Meadowlark/ Golden City Dr – Baxter Rd
18	California Oaks Rd / Clinton Keith Rd
20	I-215 NB Off-Ramp / Clinton Keith Rd
22	Meadowlark – Whitewood Rd / Clinton Keith Rd
25	Winchester Rd - SR-79 / Clinton Keith Rd - Benton Rd
28	Jefferson Ave / Murrieta Hot Springs Rd
29	Madison Ave / Murrieta Hot Springs Rd
44	Jefferson Ave / Kalmia St
52	Winchester Rd (SR-79) / Murrieta Hot Springs Rd
53	Hancock Ave / Los Alamos Rd
54	I-215 SB Ramps / Los Alamos Rd
57	Whitewood Rd / Murrieta Hot Springs Rd
59	Nutmeg St / Clinton Keith Rd
60	Mitchell Rd / Clinton Keith Rd

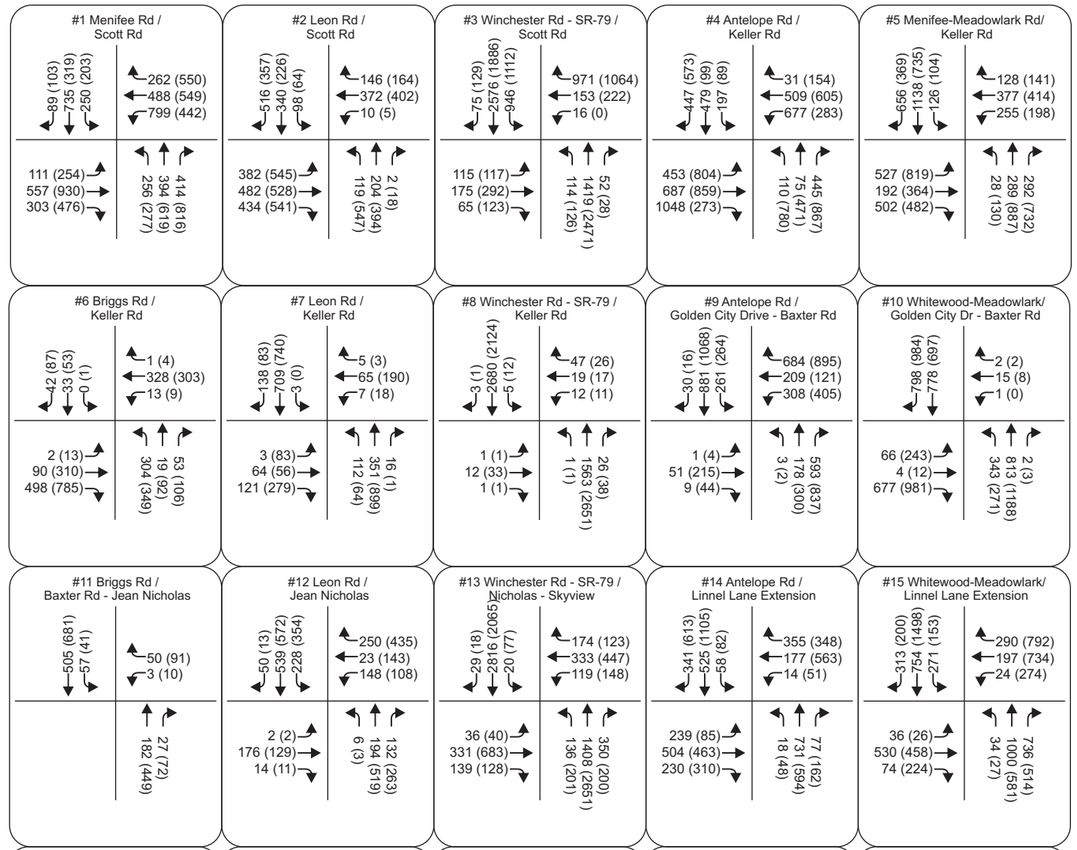

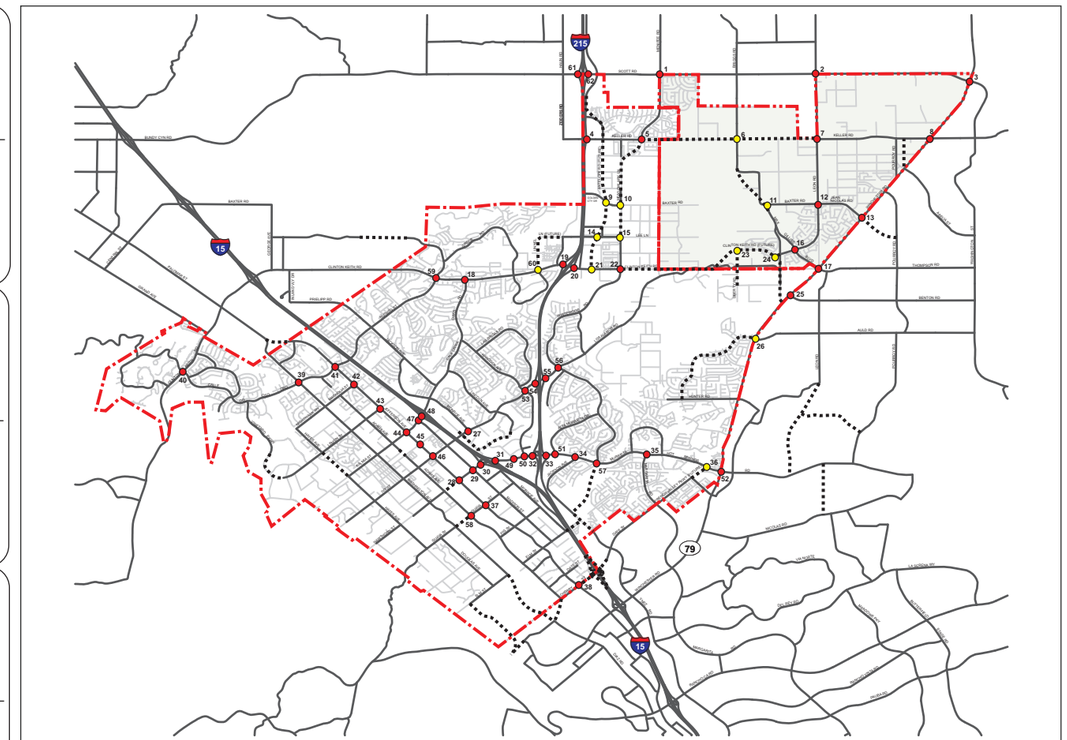

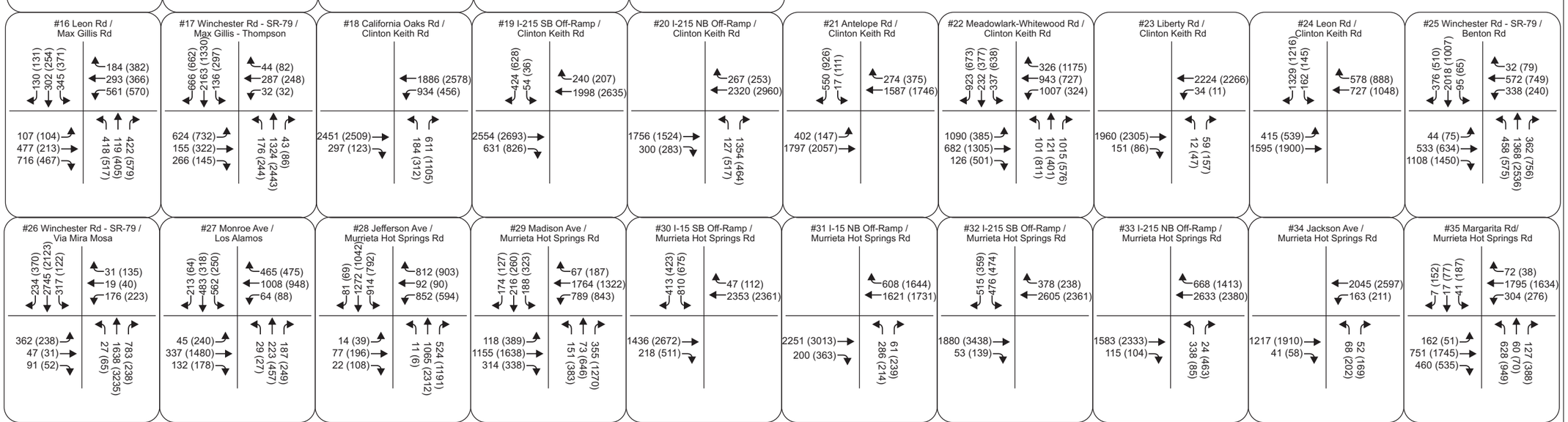

Murrieta General Plan Update

LEGEND

- Existing Study Intersection
- Future Study Intersection
- City of Murrieta Boundary
- Sphere of Influence
- Future Roadway Alignment
- 31/20 AM Peak Hr/PM Peak Hr

ITERIS

2035 Peak Hour Turning Movement Volumes - Scenario B

Figure 21A

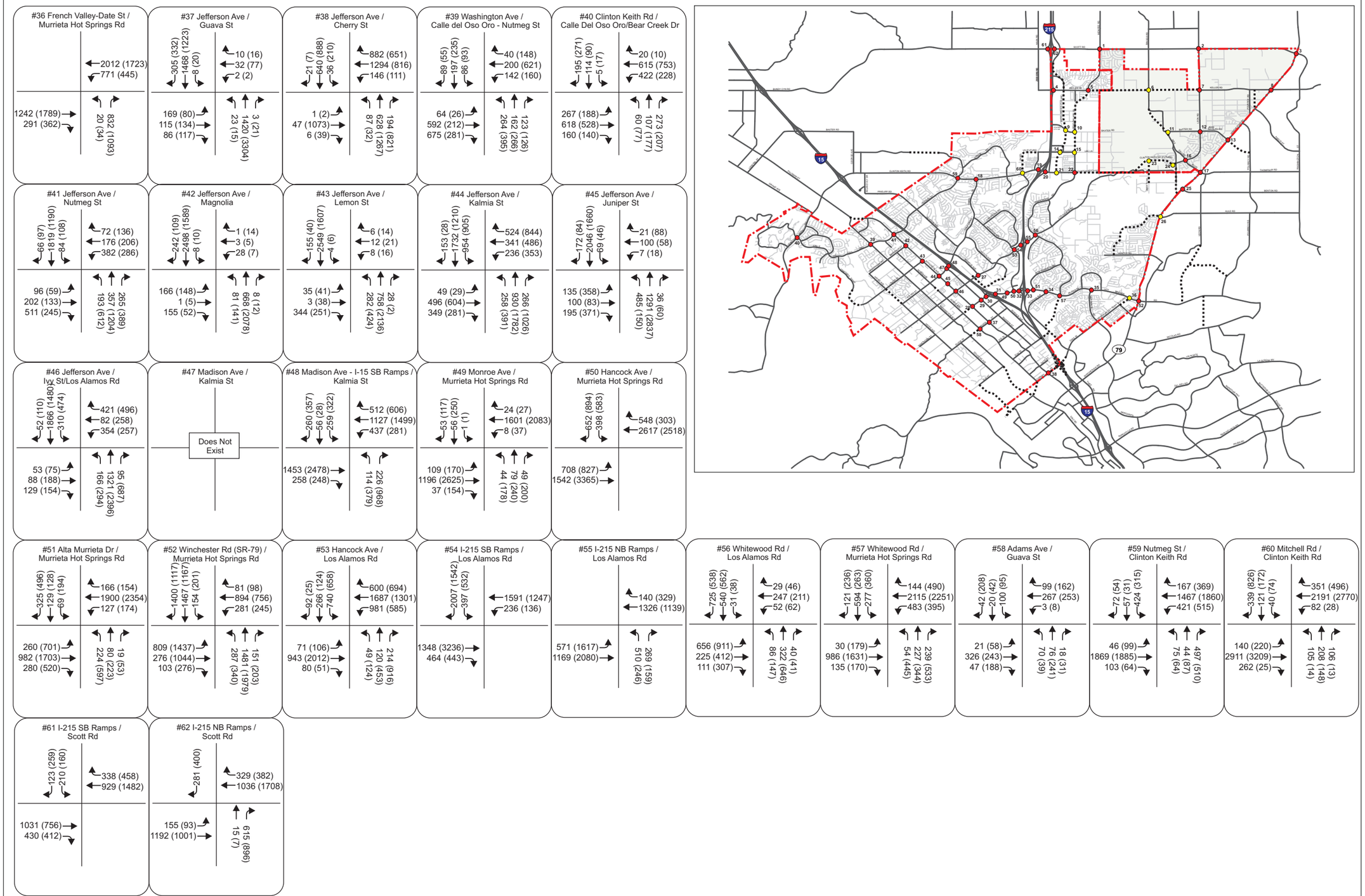

Murrieta
General Plan Update

LEGEND

- Existing Study Intersection
- Future Study Intersection
- City of Murrieta Boundary
- Sphere of Influence
- Future Roadway Alignment
- 31/20 AM Peak Hr/PM Peak Hr

ITERIS

2035 Peak Hour Turning Movement Volumes - Scenario B

Figure 21B

TABLE 13 –SCENARIO B LEVEL OF SERVICE

Int. No.	Intersection	AM Peak Hour		PM Peak Hour	
		LOS	Ave Del/Veh	LOS	Ave Del/Veh
1	Menifee Rd / Scott Rd	E	60.0	E	79.7
2	Leon Rd / Scott Rd	C	28.6	D	43.0
3	Winchester Rd - SR-79 / Scott Rd	F	177.3	F	281.2
4	Antelope Rd / Keller Rd	F	130.8	D	48.0
5	Menifee-Meadowlark Rd/ Keller Rd	D	45.1	D	42.2
6	Briggs Rd / Keller Rd	B	17.2	C	20.7
7	Leon Rd / Keller Rd	B	13.7	B	15.6
8	Winchester Rd - SR-79 / Keller Rd	A	1.5	A	1.4
9	Antelope Rd / Golden City Drive – Baxter Rd	C	25.3	F	83.1
10	Whitewood-Meadowlark/ Golden City Dr – Baxter Rd	E	72.5	F	121.3
11	Briggs Rd / Baxter Rd – Jean Nicholas	A	8.2	A	7.9
12	Leon Rd / Jean Nicholas	C	23.0	C	26.4
13	Winchester Rd - SR-79 / Nicholas - Skyview	B	19.8	C	29.3
14	Antelope Rd / Linnel Lane Extension	C	24.6	C	28.1
15	Whitewood-Meadowlark/ Linnel Lane Extension	C	27.4	D	40.7
16	Leon Rd / Max Gillis Rd	D	44.9	D	39.7
17	Winchester Rd - SR-79 / Max Gillis - Thompson	C	26.2	D	37.3
18	California Oaks Rd / Clinton Keith Rd	E	67.3	C	23.6
19	I-215 SB Off-Ramp / Clinton Keith Rd	A	7.7	B	12.5
20	I-215 NB Off-Ramp / Clinton Keith Rd	F	116.7	B	17.8
21	Antelope Rd / Clinton Keith Rd	A	5.4	A	3.8
22	Meadowlark – Whitewood Rd / Clinton Keith Rd	F	106.9	F	137.7
23	Liberty Rd / Clinton Keith Rd	A	2.0	A	4.7
24	Leon Rd / Clinton Keith Rd	C	22.2	C	29.2
25	Winchester Rd - SR-79 / Clinton Keith Rd - Benton Rd	D	43.3	E	63.5
26	Winchester Rd - SR-79 / Via Mira Mosa – Auld Rd	C	24.3	C	27.3
27	Monroe Ave / Los Alamos	C	24.5	C	27.6
28	Jefferson Ave / Murrieta Hot Springs Rd	F	122.9	F	201.4
29	Madison Ave / Murrieta Hot Springs Rd	C	27.7	F	148.3
30	I-15 SB Off-Ramp / Murrieta Hot Springs Rd	B	16.1	B	14.3
31	I-15 NB Off-Ramp / Murrieta Hot Springs Rd	A	5.5	A	7.7
32	I-215 SB Off-Ramp / Murrieta Hot Springs Rd	B	12.3	B	10.9
33	I-215 NB Off-Ramp / Murrieta Hot Springs Rd	A	5.5	A	9.4
34	Jackson Ave / Murrieta Hot Springs Rd	A	5.3	A	8.5
35	Margarita Rd/ Murrieta Hot Springs Rd	C	24.5	D	50.2
36	French Valley – Date St / Murrieta Hot Springs Rd	B	13.1	B	18.0
37	Jefferson Ave / Guava St	A	9.1	A	9.1
38	Jefferson Ave / Cherry St	C	21.8	D	37.5
39	Washington Ave / Calle del Oso Oro – Nutmeg St	C	26.7	C	27.3
40	Clinton Keith Rd / Calle de Oso Oro – Bear Creek Dr	C	23.8	B	16.4
41	Jefferson Ave / Nutmeg St	D	52.4	D	35.1
42	Jefferson Ave / Magnolia	B	10.7	A	9.0
43	Jefferson Ave / Lemon St	C	25.8	B	17.8

Int. No.	Intersection	AM Peak Hour		PM Peak Hour	
		LOS	Ave Del/Veh	LOS	Ave Del/Veh
44	Jefferson Ave / Kalmia St	E	56.4	F	158.6
45	Jefferson Ave / Juniper St	C	23.5	C	21.9
46	Jefferson Ave / Ivy St – Los Alamos Rd	C	26.2	D	35.3
47	Madison Ave / Kalmia St	N/A	N/A	N/A	N/A
48	I-15 SB Ramps / Kalmia St	C	31.8	C	32.7
49	Monroe Ave / Murrieta Hot Springs Rd	A	8.3	B	16.4
50	Hancock Ave / Murrieta Hot Springs Rd	B	18.0	B	18.0
51	Alta Murrieta Dr / Murrieta Hot Springs Rd	C	24.1	D	53.6
52	Winchester Rd (SR-79) / Murrieta Hot Springs Rd	F	107.1	F	102.6
53	Hancock Ave / Los Alamos Rd	F	83.2	F	238.4
54	I-215 SB Ramps / Los Alamos Rd	E	77.7	F	168.4
55	I-215 NB Ramps / Los Alamos Rd	C	25.0	C	24.4
56	Whitewood Rd / Los Alamos Rd	D	40.2	D	44.7
57	Whitewood Rd / Murrieta Hot Springs Rd	C	28.4	F	90.3
58	Adams Ave / Guava St	B	11.7	B	14.6
59	Nutmeg St / Clinton Keith Rd	F	88.0	F	81.0
60	Mitchell Rd / Clinton Keith Rd	C	26.2	F	115.0
61	I-215 SB Ramps / Scott Rd	A	7.6	A	8.2
62	I-215 NB Ramps / Scott Rd	B	15.8	B	16.0

5.0 RECOMMENDED SCENARIO ROADWAY IMPROVEMENTS

For the Recommended Scenario, improvements are recommended for the buildout roadway network and for intersection capacity augmentation; so that the roadways and intersection meet City level of service standards. Adequate intersection performance during peak traffic hours can be ensured with enhanced intersection geometrics which satisfy turning movement and through traffic capacity demands. In many instances, this may require additional left turn lanes, and right turn deceleration lanes on intersection approaches of the major roadway.

5.1.1 *ROADWAY IMPROVEMENTS*

The Recommended Scenario, roadway link improvements that were contained in the travel demand model include:

- Jefferson Avenue from Lemon Avenue to north of Nutmeg Street as an Arterial Street;
- Removal of the Linnel Lane extension between Greer Road and Mitchell Road;
- Inclusion of the Whitewood Road extension between Jackson Avenue and Murrieta Hot Springs Road;
- Adding the missing link of Keller Road between Menifee Road and Briggs Road;
- Upgrading of several roadway facilities to Collector and Secondary roads, in the area of Murrieta west of I-15, to better reflect how they operate;
- Changes to other roadway classifications (both upgrades and downgrades) within the City.

With these improvements, the Recommended Scenario is projected to have roadway links that exceed the City of Murrieta Standards, and thus experience a project related impact. These include, but are not limited to:

Level of Service D

- Portions of Jefferson Avenue, Washington Avenue, Meadowlark Lane/Menifee Road, Leon Road, and Whitewood Road, among others.

Level of Service E

- Portions of Jefferson Avenue, California Oaks Road, Murrieta Hot Springs Road, Clinton Keith Road, Hancock Avenue, and Meadowlark Lane/Menifee Road, among others.

LOS F

- Portions of Jefferson Avenue, Los Alamos Road, Clinton Keith Road, Winchester Road, Murrieta Hot Springs Road, Meadowlark Lane/Menifee Road, and Antelope Road, among others.

5.1.2 *Intersection Improvements*

Enhanced intersection geometrics and upgraded signal operations (such as protected phasing and overlap phasing) have been identified and are shown in **Figure 22**. The projected level of service for the Recommended Scenario with Enhanced Geometrics is shown in **Table 14** below.

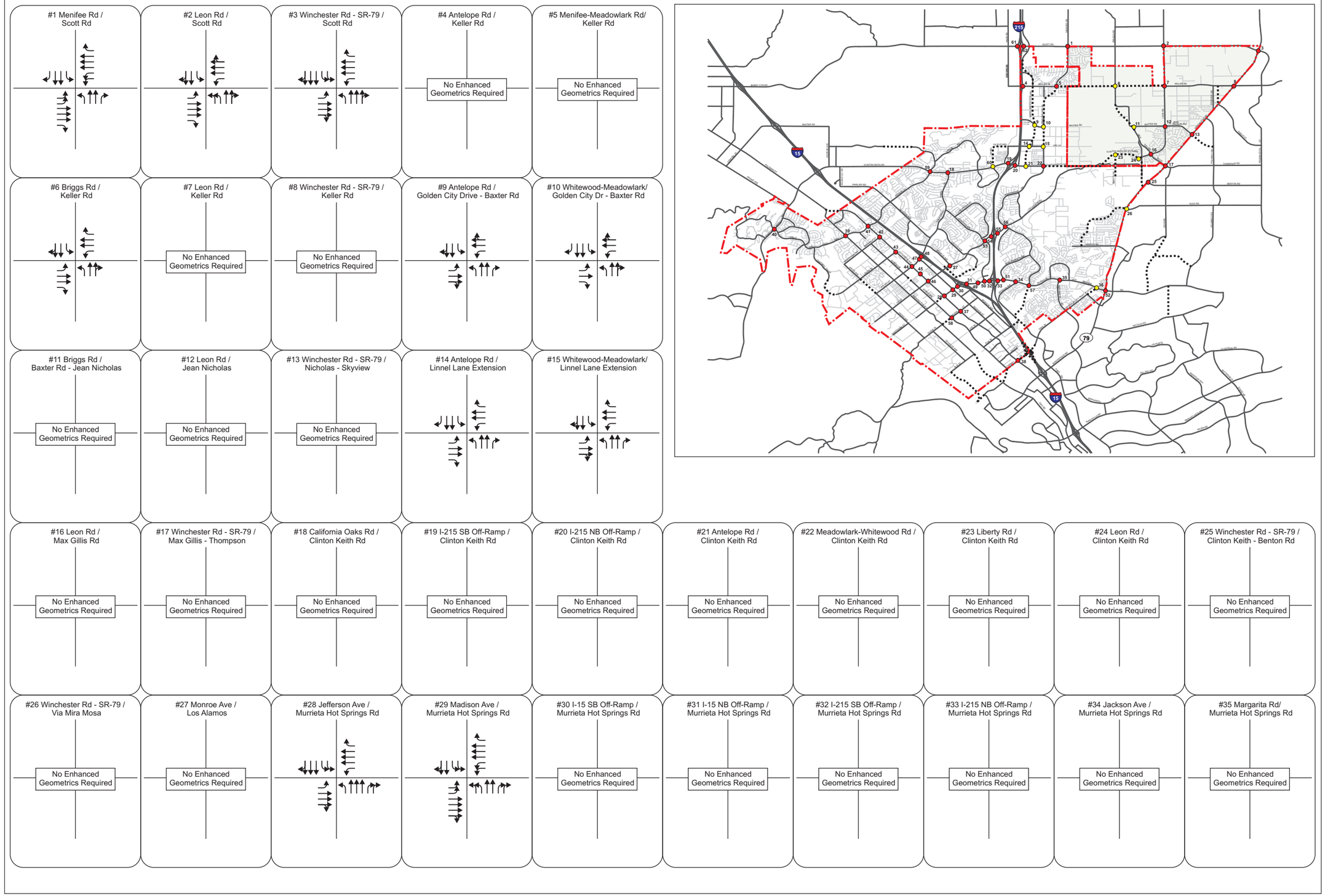

LEGEND

- Through Lane
- Turn Lane
- Shared Lane
- * Assumed Lane Configuration

ITERIS

Future 2035 With Enhancement Lane Configurations

Figure 22A

#36 French Valley-Date St / Murrieta Hot Springs Rd

No Enhanced Geometrics Required

#37 Jefferson Ave / Guava St

No Enhanced Geometrics Required

#38 Jefferson Ave / Cherry St

No Enhanced Geometrics Required

#39 Washington Ave / Calle del Oso Oro - Nutmeg St

No Enhanced Geometrics Required

#40 Clinton Keith Rd / Calle Del Oso Oro/Bear Creek Dr

No Enhanced Geometrics Required

#41 Jefferson Ave / Nutmeg St

No Enhanced Geometrics Required

#42 Jefferson Ave / Magnolia

No Enhanced Geometrics Required

#43 Jefferson Ave / Lemon St

No Enhanced Geometrics Required

#44 Jefferson Ave / Kalmia St

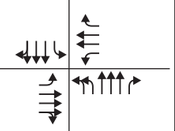

#45 Jefferson Ave / Juniper St

No Enhanced Geometrics Required

#46 Jefferson Ave / Ivy St/Los Alamos Rd

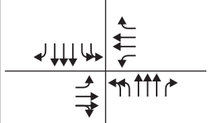

#47 Madison Ave / Kalmia St

Combined With Intersection #48

#48 Madison Ave - I-15 SB Ramps / Kalmia St

No Enhanced Geometrics Required

#49 Monroe Ave / Murrieta Hot Springs Rd

No Enhanced Geometrics Required

#50 Hancock Ave / Murrieta Hot Springs Rd

No Enhanced Geometrics Required

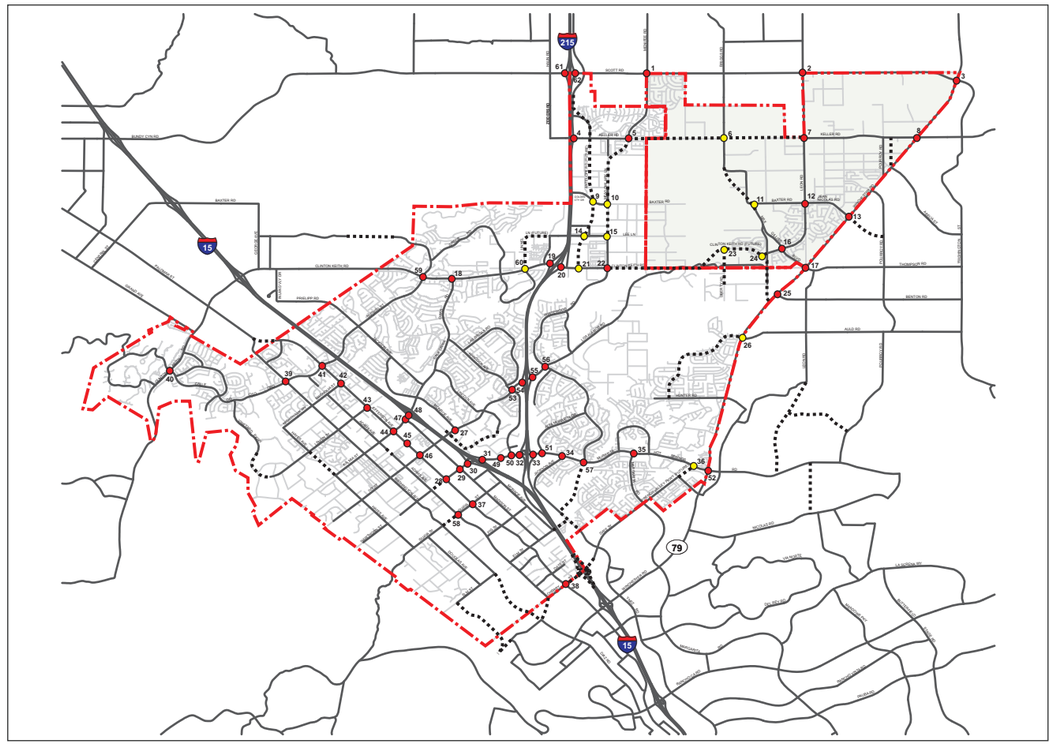

#51 Alta Murrieta Dr / Murrieta Hot Springs Rd

No Enhanced Geometrics Required

#52 Winchester Rd (SR-79) / Murrieta Hot Springs Rd

No Enhanced Geometrics Required

#53 Hancock Ave / Los Alamos Rd

No Enhanced Geometrics Required

#54 I-215 SB Ramps / Los Alamos Rd

No Enhanced Geometrics Required

#55 I-215 NB Ramps / Los Alamos Rd

No Enhanced Geometrics Required

#56 Whitewood Rd / Los Alamos Rd

No Enhanced Geometrics Required

#57 Whitewood Rd / Murrieta Hot Springs Rd

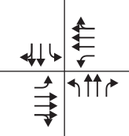

#58 Adams Ave / Guava St

No Enhanced Geometrics Required

#59 Nutmeg St / Clinton Keith Rd

No Enhanced Geometrics Required

#60 Mitchell Rd / Clinton Keith Rd

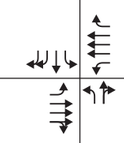

#61 I-215 SB Ramps / Scott Rd

No Enhanced Geometrics Required

#62 I-215 NB Ramps / Scott Rd

No Enhanced Geometrics Required

Murrieta General Plan Update

LEGEND

- Through Lane
- Turn Lane
- Shared Lane
- * Assumed Lane Configuration

ITERIS

Future 2035 With Enhancement Lane Configurations

Figure 22B

TABLE 14–RECOMMENDED SCENARIO WITH ENHANCED GEOMETRICS LEVEL OF SERVICE

Int. No.	Intersection	Recommended Scenario				Recommended Scenario with Enhanced Geometrics				Project Impact	Residual Impact
		AM Peak Hour		PM Peak Hour		AM Peak Hour		PM Peak Hour			
		LOS	Ave Del/ Veh	LOS	Ave Del/ Veh	LOS	Ave Del/ Veh	LOS	Ave Del/ Veh		
1	Menifee Rd / Scott Rd	E	68.3	F	86.3	C	29.5	C	31.2	Yes	No
2	Leon Rd / Scott Rd	C	27.9	D	46.7	C	26.6	C	32.5		
3	Winchester Rd - SR-79 / Scott Rd	F	177.4	F	284.5	F	132.7	F	187.8	Yes	Yes
4	Antelope Rd / Keller Rd	F	158.6	D	49.9					Yes	Yes
5	Menifee-Meadowlark Rd/ Keller Rd	E	68.8	D	47.6					Yes	Yes
6	Briggs Rd / Keller Rd	B	18.5	B	19.0	B	13.6	B	13.7		
7	Leon Rd / Keller Rd	B	12.3	C	26.2						
8	Winchester Rd - SR-79 / Keller Rd	A	1.6	A	1.6						
9	Antelope Rd / Golden City Drive – Baxter Rd	C	25.2	F	89.2	C	20.3	E	55.2	Yes	Yes
10	Whitewood-Meadowlark/ Golden City Dr – Baxter Rd	F	107.7	F	113.6	E	75.8	F	108.0	Yes	Yes
11	Briggs Rd / Baxter Rd – Jean Nicholas	A	8.8	A	8.3						
12	Leon Rd / Jean Nicholas	C	22.1	C	26.4						
13	Winchester Rd - SR-79 / Nicholas - Skyview	B	19.7	C	28.5						
14	Antelope Rd / Linnel Lane Extension	C	22.1	C	28.5	C	21.4	C	23.4		
15	Whitewood-Meadowlark/ Linnel Lane Extension	C	26.0	D	43.7	C	24.6	D	38.7		
16	Leon Rd / Max Gillis Rd	D	51.9	D	40.3						
17	Winchester Rd - SR-79 / Max Gillis - Thompson	C	27.1	D	37.8						
18	California Oaks Rd / Clinton Keith Rd	E	60.7	C	20.7					Yes	Yes
19	I-215 SB Off-Ramp / Clinton Keith Rd	A	7.9	B	11.5						
20	I-215 NB Off-Ramp / Clinton Keith Rd	F	124.7	B	17.1					Yes	Yes
21	Antelope Rd / Clinton Keith Rd	A	5.1	A	4.5						
22	Meadowlark – Whitewood Rd / Clinton Keith Rd	F	145.9	F	121.7					Yes	Yes
23	Liberty Rd / Clinton Keith Rd	A	7.4	B	10.0						
24	Leon Rd / Clinton Keith Rd	C	26.0	C	28.6						
25	Winchester Rd - SR-79 / Clinton Keith Rd - Benton Rd	D	38.8	D	53.7						
26	Winchester Rd - SR-79 / Via Mira Mosa – Auld Rd	C	24.1	C	25.1						

Int. No.	Intersection	Recommended Scenario				Recommended Scenario with Enhanced Geometrics				Project Impact	Residual Impact
		AM Peak Hour		PM Peak Hour		AM Peak Hour		PM Peak Hour			
		LOS	Ave Del/ Veh	LOS	Ave Del/ Veh	LOS	Ave Del/ Veh	LOS	Ave Del/ Veh		
27	Monroe Ave / Los Alamos	C	24.5	C	27.5						
28	Jefferson Ave / Murrieta Hot Springs Rd	F	133.3	F	206.4	E	56.1	F	115.8	Yes	Yes
29	Madison Ave / Murrieta Hot Springs Rd	C	26.6	F	129.6	C	23.5	D	51.1	Yes	No
30	I-15 SB Off-Ramp / Murrieta Hot Springs Rd	B	16.1	B	14.3						
31	I-15 NB Off-Ramp / Murrieta Hot Springs Rd	A	5.7	A	7.9						
32	I-215 SB Off-Ramp / Murrieta Hot Springs Rd	B	12.5	B	10.8						
33	I-215 NB Off-Ramp / Murrieta Hot Springs Rd	A	5.6	A	9.4						
34	Jackson Ave / Murrieta Hot Springs Rd	A	5.1	A	8.5						
35	Margarita Rd/ Murrieta Hot Springs Rd	C	24.6	D	49.2						
36	French Valley – Date St / Murrieta Hot Springs Rd	B	12.9	B	18.4						
37	Jefferson Ave / Guava St	A	9.4	A	7.9						
38	Jefferson Ave / Cherry St	C	21.8	D	37.8						
39	Washington Ave / Calle del Oso Oro – Nutmeg St	C	27.6	C	27.5						
40	Clinton Keith Rd / Calle de Oso Oro – Bear Creek Dr	C	23.7	B	16.5						
41	Jefferson Ave / Nutmeg St	D	51.1	D	36.0						
42	Jefferson Ave / Magnolia	B	10.7	A	9.4						
43	Jefferson Ave / Lemon St	C	28.2	B	18.3						
44	Jefferson Ave / Kalmia St	E	59.3	F	159.9	E	60.3	F	158.5	Yes	Yes
45	Jefferson Ave / Juniper St	C	23.4	C	22.3						
46	Jefferson Ave / Ivy St – Los Alamos Rd	C	26.8	D	35.8	C	26.8	D	36.5		
47	Madison Ave / Kalmia St	N/A	N/A	N/A	N/A	N/A	N/A	N/A	N/A	N/A	N/A
48	I-15 SB Ramps / Kalmia St	C	29.4	C	30.9						
49	Monroe Ave / Murrieta Hot Springs Rd	A	8.0	B	16.2						
50	Hancock Ave / Murrieta Hot Springs Rd	B	17.6	B	17.6						
51	Alta Murrieta Dr / Murrieta Hot Springs Rd	C	23.8	D	51.9						
52	Winchester Rd (SR-79) / Murrieta Hot Springs Rd	F	107.8	F	104.8					Yes	Yes
53	Hancock Ave / Los Alamos Rd	F	84.6	F	223.1					Yes	Yes
54	I-215 SB Ramps / Los Alamos Rd	E	77.2	F	157.8					Yes	Yes
55	I-215 NB Ramps / Los Alamos Rd	C	25.5	C	24.4						

Int. No.	Intersection	Recommended Scenario				Recommended Scenario with Enhanced Geometrics				Project Impact	Residual Impact
		AM Peak Hour		PM Peak Hour		AM Peak Hour		PM Peak Hour			
		LOS	Ave Del/ Veh	LOS	Ave Del/ Veh	LOS	Ave Del/ Veh	LOS	Ave Del/ Veh		
56	Whitewood Rd / Los Alamos Rd	D	44.4	D	44.6						
57	Whitewood Rd / Murrieta Hot Springs Rd	C	28.3	F	88.7	C	24.3	D	51.6	Yes	No
58	Adams Ave / Guava St	B	12.2	B	14.3						
59	Nutmeg St / Clinton Keith Rd	F	96.5	E	78.4					Yes	Yes
60	Mitchell Rd / Clinton Keith Rd	C	20.4	F	120.7	B	18.7	C	29.6	Yes	No
61	I-215 SB Ramps / Scott Rd	A	8.5	A	8.1						
62	I-215 NB Ramps / Scott Rd	B	15.9	B	16.2						

As noted before in Table 13, the Recommended scenario is shown to have 18 intersections that are projected to operate at levels of service that exceed the City's standards, and thus have a project related impact. The locations are:

1 Menifee Rd / Scott Rd
3 Winchester Rd - SR-79 / Scott Rd
4 Antelope Rd / Keller Rd
5 Menifee-Meadowlark Rd/ Keller Rd
9 Antelope Rd / Golden City Drive – Baxter Rd
10 Whitewood-Meadowlark/ Golden City Dr – Baxter Rd
18 California Oaks Rd / Clinton Keith Rd
20 I-215 NB Off-Ramp / Clinton Keith Rd
22 Meadowlark – Whitewood Rd / Clinton Keith Rd
28 Jefferson Ave / Murrieta Hot Springs Rd
29 Madison Ave / Murrieta Hot Springs Rd
44 Jefferson Ave / Kalmia St
52 Winchester Rd (SR-79) / Murrieta Hot Springs Rd
53 Hancock Ave / Los Alamos Rd
54 I-215 SB Ramps / Los Alamos Rd
57 Whitewood Rd / Murrieta Hot Springs Rd
59 Nutmeg St / Clinton Keith Rd
60 Mitchell Rd / Clinton Keith Rd

After enhanced geometrics are applied to the intersections under the Recommended scenario, 14 intersections are projected to still operate at levels of service that exceed the City's standards, and thus have a cumulative impact. These locations area:

3 Winchester Rd - SR-79 / Scott Rd
4 Antelope Rd / Keller Rd
5 Menifee-Meadowlark Rd/ Keller Rd
9 Antelope Rd / Golden City Drive – Baxter Rd
10 Whitewood-Meadowlark/ Golden City Dr – Baxter Rd
18 California Oaks Rd / Clinton Keith Rd
20 I-215 NB Off-Ramp / Clinton Keith Rd
22 Meadowlark – Whitewood Rd / Clinton Keith Rd
28 Jefferson Ave / Murrieta Hot Springs Rd
44 Jefferson Ave / Kalmia St
52 Winchester Rd (SR-79) / Murrieta Hot Springs Rd
53 Hancock Ave / Los Alamos Rd
54 I-215 SB Ramps / Los Alamos Rd
59 Nutmeg St / Clinton Keith Rd

The proposed City of Murrieta Circulation Element roadway plan is shown in **Figure 23**.

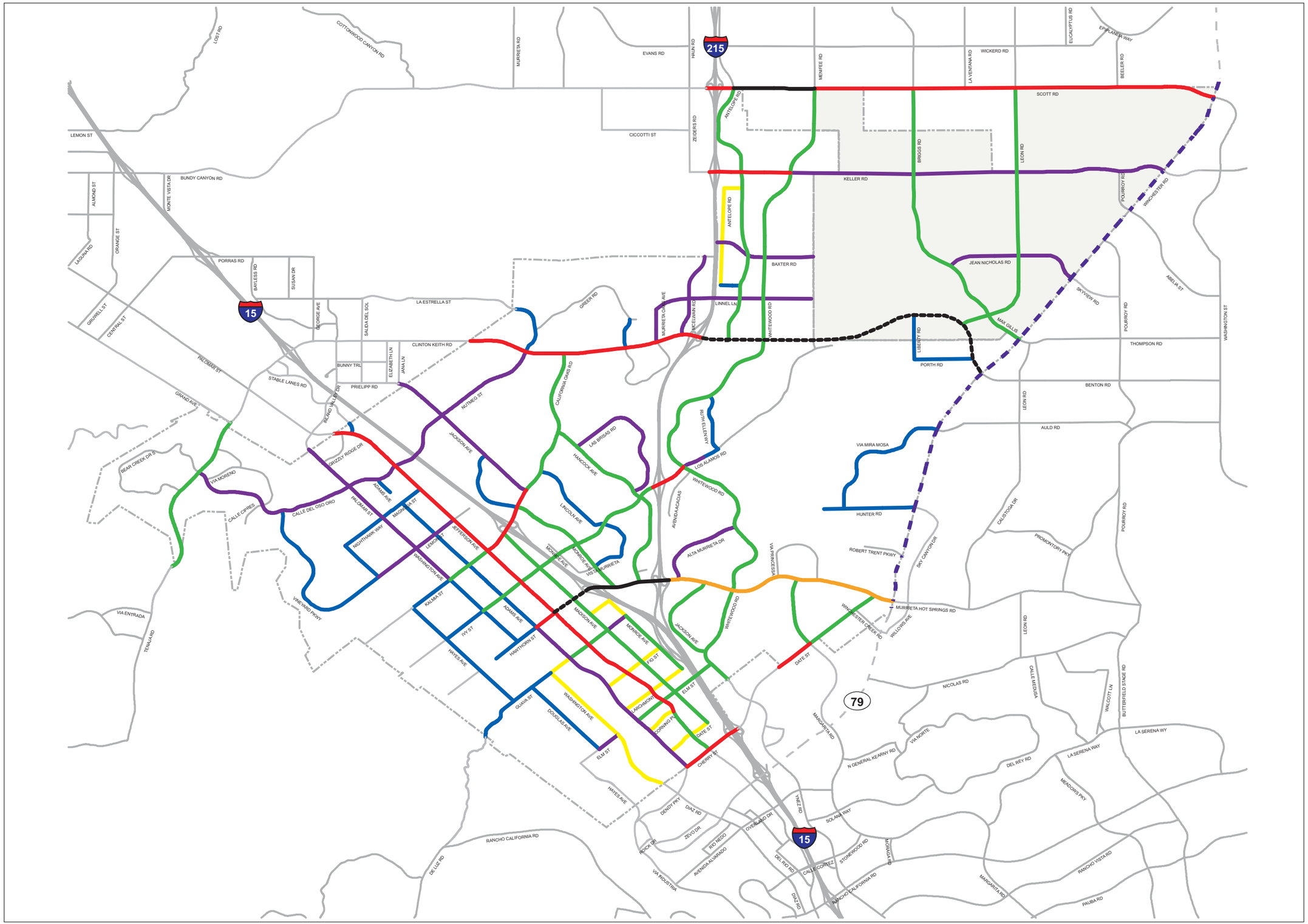

LEGEND

* Curb to Curb / R/W

County of Riverside Expressway	110' / 184'
Augmented Urban Arterial	126' / 150'
Multi-Modal Transp. Corridor	86' / 134'
Urban Arterial	110' / 134'
Arterial	86' / 110'
Major	76' / 100'
Secondary	64' / 88'
Industrial Collector	56' / 78'
Collector	44' / 66'
Selected Roadways Shown for Clarity	
City of Murrieta Boundary	
Sphere of Influence	

* Per City Standard Drawings

0 1 2 Miles

ITERIS

11/09 JN 10-106976

Functional Classifications

Figure 23

APPENDIX A:
TRAFFIC COUNTS

Counts Unlimited Inc.
25286 Jaclyn Avenue
Moreno Valley, CA 92557
951-485-7934

City of Murrieta
N/S: Whitewood Rd-Meadowlark Lane
E/W: Clinton Keith Road
Weather: Sunny

File Name : MURWHCKAM
Site Code : 9311135
Start Date : 12/9/2009
Page No : 1

Groups Printed- Total Volume

	Meadowlark Lane Southbound				Clinton Keith Road Westbound				Whitewood Road Northbound				Clinton Keith Road Eastbound				
Start Time	Left	Thru	Right	App. Total	Left	Thru	Right	App. Total	Left	Thru	Right	App. Total	Left	Thru	Right	App. Total	Int. Total
07:00 AM	0	40	48	88	5	2	1	8	61	25	3	89	28	1	66	95	280
07:15 AM	0	73	42	115	29	2	0	31	56	34	27	117	61	3	65	129	392
07:30 AM	0	26	30	56	0	1	0	1	15	9	0	24	34	0	31	65	146
07:45 AM	0	22	21	43	0	2	0	2	22	8	0	30	13	0	11	24	99
Total	0	161	141	302	34	7	1	42	154	76	30	260	136	4	173	313	917
08:00 AM	0	18	32	50	0	0	0	0	20	8	0	28	11	0	24	35	113
08:15 AM	0	21	29	50	1	0	0	1	32	10	1	43	15	0	22	37	131
08:30 AM	1	19	19	39	0	0	1	1	29	18	0	47	8	0	15	23	110
08:45 AM	0	16	18	34	0	0	0	0	17	7	0	24	18	0	19	37	95
Total	1	74	98	173	1	0	1	2	98	43	1	142	52	0	80	132	449
Grand Total	1	235	239	475	35	7	2	44	252	119	31	402	188	4	253	445	1366
Apprch %	0.2	49.5	50.3		79.5	15.9	4.5		62.7	29.6	7.7		42.2	0.9	56.9		
Total %	0.1	17.2	17.5	34.8	2.6	0.5	0.1	3.2	18.4	8.7	2.3	29.4	13.8	0.3	18.5	32.6	

	Meadowlark Lane Southbound				Clinton Keith Road Westbound				Whitewood Road Northbound				Clinton Keith Road Eastbound				
Start Time	Left	Thru	Right	App. Total	Left	Thru	Right	App. Total	Left	Thru	Right	App. Total	Left	Thru	Right	App. Total	Int. Total
Peak Hour Analysis From 07:00 AM to 08:45 AM - Peak 1 of 1																	
Peak Hour for Entire Intersection Begins at 07:00 AM																	
07:00 AM	0	40	**48**	88	5	**2**	**1**	8	**61**	25	3	89	28	1	**66**	95	280
07:15 AM	0	**73**	42	**115**	**29**	2	0	**31**	56	**34**	**27**	**117**	**61**	**3**	65	**129**	**392**
07:30 AM	0	26	30	56	0	1	0	1	15	9	0	24	34	0	31	65	146
07:45 AM	0	22	21	43	0	2	0	2	22	8	0	30	13	0	11	24	99
Total Volume	0	161	141	302	34	7	1	42	154	76	30	260	136	4	173	313	917
% App. Total	0	53.3	46.7		81	16.7	2.4		59.2	29.2	11.5		43.5	1.3	55.3		
PHF	.000	.551	.734	.657	.293	.875	.250	.339	.631	.559	.278	.556	.557	.333	.655	.607	.585

Counts Unlimited Inc.
25286 Jaclyn Avenue
Moreno Valley, CA 92557
951-485-7934

City of Murrieta
N/S: Whitewood Rd-Meadowlark Lane
E/W: Clinton Keith Road
Weather: Sunny

File Name : MURWHCKAM
Site Code : 9311135
Start Date : 12/9/2009
Page No : 2

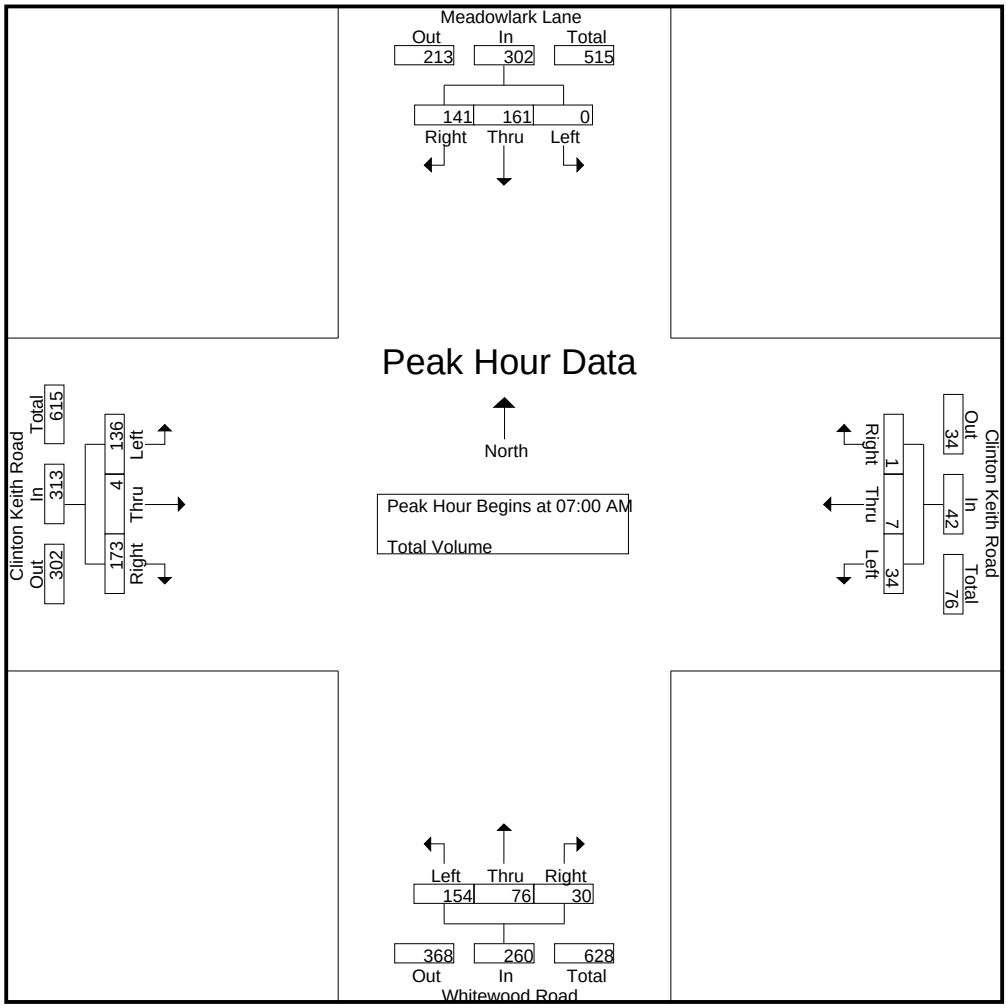

Peak Hour Analysis From 07:00 AM to 08:45 AM - Peak 1 of 1

Peak Hour for Each Approach Begins at:

	07:00 AM				07:00 AM				07:00 AM				07:00 AM			
+0 mins.	0	40	**48**	88	5	**2**	**1**	8	**61**	25	3	89	28	1	**66**	95
+15 mins.	0	**73**	42	**115**	**29**	2	0	**31**	56	**34**	**27**	**117**	**61**	**3**	65	**129**
+30 mins.	0	26	30	56	0	1	0	1	15	9	0	24	34	0	31	65
+45 mins.	0	22	21	43	0	2	0	2	22	8	0	30	13	0	11	24
Total Volume	0	161	141	302	34	7	1	42	154	76	30	260	136	4	173	313
% App. Total	0	53.3	46.7		81	16.7	2.4		59.2	29.2	11.5		43.5	1.3	55.3	
PHF	.000	.551	.734	.657	.293	.875	.250	.339	.631	.559	.278	.556	.557	.333	.655	.607

Counts Unlimited Inc.
25286 Jaclyn Avenue
Moreno Valley, CA 92557
951-485-7934

City of Murrieta
N/S: Whitewood RD-Meadowlark Lane
E/W: Clinton Keith Road
Weather: Sunny

File Name : MURWHCKPM
Site Code : 9311135
Start Date : 12/9/2009
Page No : 1

Groups Printed- Total Volume

	Meadowlark Lane Southbound				Clinton Keith Road Westbound				Whitewood Road Northbound				Clinton Keith Road Eastbound				
Start Time	Left	Thru	Right	App. Total	Left	Thru	Right	App. Total	Left	Thru	Right	App. Total	Left	Thru	Right	App. Total	Int. Total
04:00 PM	0	23	22	45	0	0	1	1	47	53	1	101	44	0	25	69	216
04:15 PM	0	23	14	37	0	0	0	0	47	70	0	117	34	0	32	66	220
04:30 PM	0	20	27	47	0	0	0	0	65	61	1	127	47	2	44	93	267
04:45 PM	0	22	25	47	0	0	1	1	53	84	1	138	48	0	38	86	272
Total	0	88	88	176	0	0	2	2	212	268	3	483	173	2	139	314	975
05:00 PM	0	18	26	44	0	0	0	0	65	84	0	149	31	0	53	84	277
05:15 PM	0	25	11	36	0	0	0	0	45	80	2	127	42	0	50	92	255
05:30 PM	0	23	15	38	0	1	0	1	70	97	1	168	39	1	26	66	273
05:45 PM	0	12	10	22	0	0	0	0	68	119	0	187	49	2	23	74	283
Total	0	78	62	140	0	1	0	1	248	380	3	631	161	3	152	316	1088
Grand Total	0	166	150	316	0	1	2	3	460	648	6	1114	334	5	291	630	2063
Apprch %	0	52.5	47.5		0	33.3	66.7		41.3	58.2	0.5		53	0.8	46.2		
Total %	0	8	7.3	15.3	0	0	0.1	0.1	22.3	31.4	0.3	54	16.2	0.2	14.1	30.5	

	Meadowlark Lane Southbound				Clinton Keith Road Westbound				Whitewood Road Northbound				Clinton Keith Road Eastbound				
Start Time	Left	Thru	Right	App. Total	Left	Thru	Right	App. Total	Left	Thru	Right	App. Total	Left	Thru	Right	App. Total	Int. Total
Peak Hour Analysis From 04:00 PM to 05:45 PM - Peak 1 of 1																	
Peak Hour for Entire Intersection Begins at 05:00 PM																	
05:00 PM	0	18	**26**	**44**	0	0	0	0	65	84	0	149	31	0	**53**	84	277
05:15 PM	0	**25**	11	36	0	0	0	0	45	80	**2**	127	42	0	50	**92**	255
05:30 PM	0	23	15	38	0	**1**	0	**1**	**70**	97	1	168	39	1	26	66	273
05:45 PM	0	12	10	22	0	0	0	0	68	**119**	0	**187**	**49**	**2**	23	74	**283**
Total Volume	0	78	62	140	0	1	0	1	248	380	3	631	161	3	152	316	1088
% App. Total	0	55.7	44.3		0	100	0		39.3	60.2	0.5		50.9	0.9	48.1		
PHF	.000	.780	.596	.795	.000	.250	.000	.250	.886	.798	.375	.844	.821	.375	.717	.859	.961

Counts Unlimited Inc.
25286 Jaclyn Avenue
Moreno Valley, CA 92557
951-485-7934

City of Murrieta
N/S: Whitewood RD-Meadowlark Lane
E/W: Clinton Keith Road
Weather: Sunny

File Name : MURWHCKPM
Site Code : 9311135
Start Date : 12/9/2009
Page No : 2

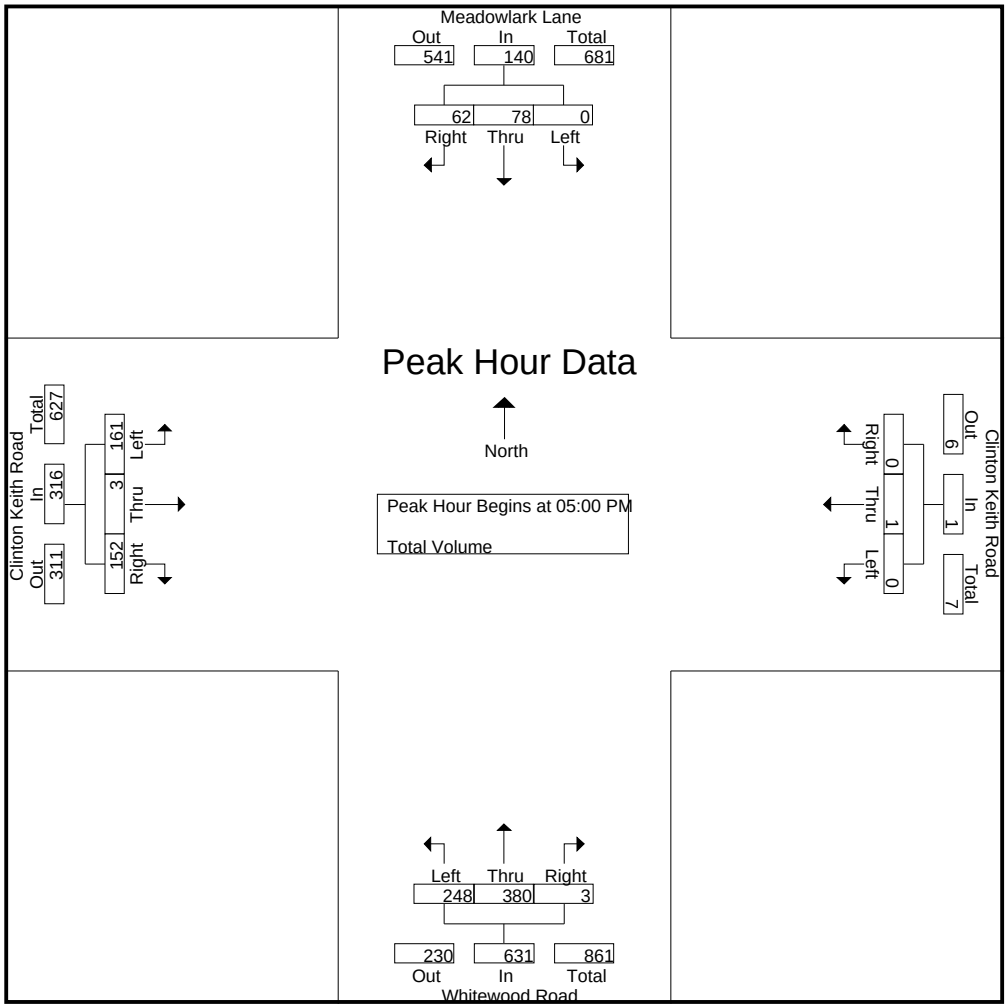

Peak Hour Analysis From 04:00 PM to 05:45 PM - Peak 1 of 1

Peak Hour for Each Approach Begins at:

	04:00 PM				04:00 PM				05:00 PM				04:30 PM			
+0 mins.	0	**23**	22	45	0	0	**1**	**1**	65	84	0	149	47	**2**	44	**93**
+15 mins.	0	23	14	37	0	0	0	0	45	80	**2**	127	**48**	0	38	86
+30 mins.	0	20	**27**	**47**	0	0	0	0	**70**	97	1	168	31	0	**53**	84
+45 mins.	0	22	25	47	0	0	1	1	68	**119**	0	**187**	42	0	50	92
Total Volume	0	88	88	176	0	0	2	2	248	380	3	631	168	2	185	355
% App. Total	0	50	50		0	0	100		39.3	60.2	0.5		47.3	0.6	52.1	
PHF	.000	.957	.815	.936	.000	.000	.500	.500	.886	.798	.375	.844	.875	.250	.873	.954

Counts Unlimited Inc.
25286 Jaclyn Avenue
Moreno Valley, CA 92557
951-485-7934

City of Murrieta
N/S: Menifee Road
E/W: Keller Road
Weather: Sunny

File Name : MURMEKEAM
Site Code : 9311043
Start Date : 12/10/2009
Page No : 1

Groups Printed- Total Volume

	Menifee Road Southbound				Keller Road Westbound				Meadowlark Road (Closed) Northbound				Keller Road Eastbound				
Start Time	Left	Thru	Right	App. Total	Left	Thru	Right	App. Total	Left	Thru	Right	App. Total	Left	Thru	Right	App. Total	Int. Total
07:00 AM	1	0	18	19	0	6	2	8	0	0	0	0	8	3	0	11	38
07:15 AM	2	0	41	43	0	12	3	15	0	0	0	0	23	2	0	25	83
07:30 AM	5	0	33	38	0	7	5	12	0	0	0	0	57	7	0	64	114
07:45 AM	3	0	29	32	0	6	0	6	0	0	0	0	17	7	0	24	62
Total	11	0	121	132	0	31	10	41	0	0	0	0	105	19	0	124	297
08:00 AM	1	0	15	16	0	3	1	4	0	0	0	0	10	2	0	12	32
08:15 AM	0	0	17	17	0	6	6	12	0	0	0	0	7	2	0	9	38
08:30 AM	3	0	15	18	0	7	4	11	0	0	0	0	6	2	0	8	37
08:45 AM	3	0	13	16	0	2	1	3	0	0	0	0	6	2	0	8	27
Total	7	0	60	67	0	18	12	30	0	0	0	0	29	8	0	37	134
Grand Total	18	0	181	199	0	49	22	71	0	0	0	0	134	27	0	161	431
Apprch %	9	0	91		0	69	31		0	0	0		83.2	16.8	0		
Total %	4.2	0	42	46.2	0	11.4	5.1	16.5	0	0	0	0	31.1	6.3	0	37.4	

	Menifee Road Southbound				Keller Road Westbound				Meadowlark Road (Closed) Northbound				Keller Road Eastbound				
Start Time	Left	Thru	Right	App. Total	Left	Thru	Right	App. Total	Left	Thru	Right	App. Total	Left	Thru	Right	App. Total	Int. Total
Peak Hour Analysis From 07:00 AM to 08:45 AM - Peak 1 of 1																	
Peak Hour for Entire Intersection Begins at 07:00 AM																	
07:00 AM	1	0	18	19	0	6	2	8	0	0	0	0	8	3	0	11	38
07:15 AM	2	0	**41**	**43**	0	**12**	3	**15**	0	0	0	0	23	2	0	25	83
07:30 AM	**5**	0	33	38	0	7	**5**	12	0	0	0	0	**57**	**7**	0	**64**	**114**
07:45 AM	3	0	29	32	0	6	0	6	0	0	0	0	17	7	0	24	62
Total Volume	11	0	121	132	0	31	10	41	0	0	0	0	105	19	0	124	297
% App. Total	8.3	0	91.7		0	75.6	24.4		0	0	0		84.7	15.3	0		
PHF	.550	.000	.738	.767	.000	.646	.500	.683	.000	.000	.000	.000	.461	.679	.000	.484	.651

Counts Unlimited Inc.
25286 Jaclyn Avenue
Moreno Valley, CA 92557
951-485-7934

City of Murrieta
N/S: Menifee Road
E/W: Keller Road
Weather: Sunny

File Name : MURMEKEAM
Site Code : 9311043
Start Date : 12/10/2009
Page No : 2

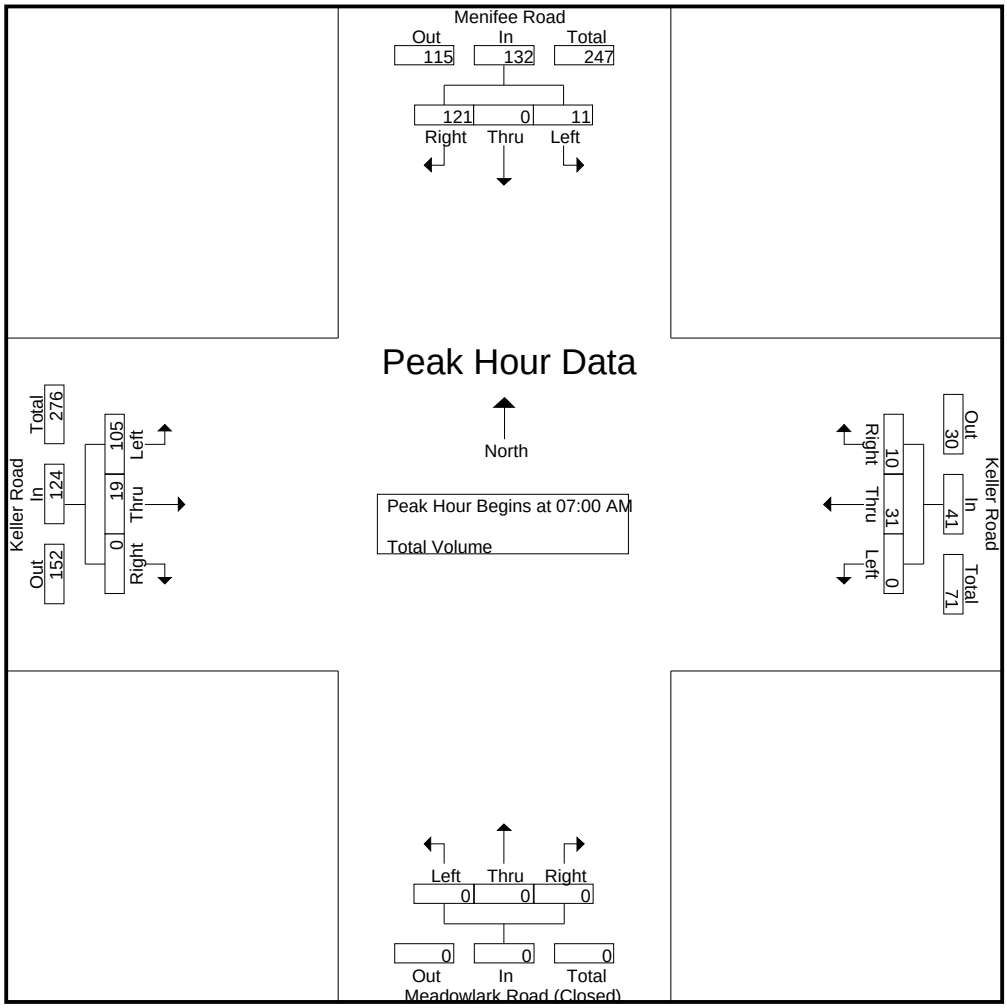

Peak Hour Analysis From 07:00 AM to 08:45 AM - Peak 1 of 1

Peak Hour for Each Approach Begins at:

	07:00 AM				07:00 AM				07:00 AM				07:15 AM			
+0 mins.	1	0	18	19	0	6	2	8	0	0	0	0	23	2	0	25
+15 mins.	2	0	**41**	**43**	0	**12**	3	**15**	0	0	0	0	**57**	**7**	0	**64**
+30 mins.	**5**	0	33	38	0	7	**5**	12	0	0	0	0	17	7	0	24
+45 mins.	3	0	29	32	0	6	0	6	0	0	0	0	10	2	0	12
Total Volume	11	0	121	132	0	31	10	41	0	0	0	0	107	18	0	125
% App. Total	8.3	0	91.7		0	75.6	24.4		0	0	0		85.6	14.4	0	
PHF	.550	.000	.738	.767	.000	.646	.500	.683	.000	.000	.000	.000	.469	.643	.000	.488

Counts Unlimited Inc.
25286 Jaclyn Avenue
Moreno Valley, CA 92557
951-485-7934

City of Murrieta
N/S: Menifee Road
E/W: Keller Road
Weather: Sunny

File Name : MURMEKEPM
Site Code : 9311043
Start Date : 12/10/2009
Page No : 1

Groups Printed- Total Volume

	Menifee Road Southbound				Keller Road Westbound				Meadowlark Road (Closed) Northbound				Keller Road Eastbound				
Start Time	Left	Thru	Right	App. Total	Left	Thru	Right	App. Total	Left	Thru	Right	App. Total	Left	Thru	Right	App. Total	Int. Total
04:00 PM	6	0	9	15	0	2	1	3	0	0	0	0	22	3	0	25	43
04:15 PM	2	0	19	21	0	4	0	4	0	0	0	0	30	6	0	36	61
04:30 PM	2	0	16	18	0	4	1	5	0	0	0	0	23	4	0	27	50
04:45 PM	3	0	10	13	0	7	2	9	0	0	0	0	31	11	0	42	64
Total	13	0	54	67	0	17	4	21	0	0	0	0	106	24	0	130	218
05:00 PM	2	0	14	16	0	3	1	4	0	0	0	0	23	7	0	30	50
05:15 PM	3	0	12	15	0	3	1	4	0	0	0	0	31	9	0	40	59
05:30 PM	4	0	12	16	0	7	6	13	0	0	0	0	34	5	0	39	68
05:45 PM	2	0	7	9	0	6	1	7	0	0	0	0	31	13	0	44	60
Total	11	0	45	56	0	19	9	28	0	0	0	0	119	34	0	153	237
Grand Total	24	0	99	123	0	36	13	49	0	0	0	0	225	58	0	283	455
Apprch %	19.5	0	80.5		0	73.5	26.5		0	0	0		79.5	20.5	0		
Total %	5.3	0	21.8	27	0	7.9	2.9	10.8	0	0	0	0	49.5	12.7	0	62.2	

	Menifee Road Southbound				Keller Road Westbound				Meadowlark Road (Closed) Northbound				Keller Road Eastbound				
Start Time	Left	Thru	Right	App. Total	Left	Thru	Right	App. Total	Left	Thru	Right	App. Total	Left	Thru	Right	App. Total	Int. Total
Peak Hour Analysis From 04:00 PM to 05:45 PM - Peak 1 of 1																	
Peak Hour for Entire Intersection Begins at 04:45 PM																	
04:45 PM	3	0	10	13	0	**7**	2	9	0	0	0	0	31	**11**	0	**42**	64
05:00 PM	2	0	**14**	**16**	0	3	1	4	0	0	0	0	23	7	0	30	50
05:15 PM	3	0	12	15	0	3	1	4	0	0	0	0	31	9	0	40	59
05:30 PM	**4**	0	12	16	0	7	**6**	**13**	0	0	0	0	**34**	5	0	39	**68**
Total Volume	12	0	48	60	0	20	10	30	0	0	0	0	119	32	0	151	241
% App. Total	20	0	80		0	66.7	33.3		0	0	0		78.8	21.2	0		
PHF	.750	.000	.857	.938	.000	.714	.417	.577	.000	.000	.000	.000	.875	.727	.000	.899	.886

Counts Unlimited Inc.
25286 Jaclyn Avenue
Moreno Valley, CA 92557
951-485-7934

City of Murrieta
N/S: Menifee Road
E/W: Keller Road
Weather: Sunny

File Name : MURMEKEPM
Site Code : 9311043
Start Date : 12/10/2009
Page No : 2

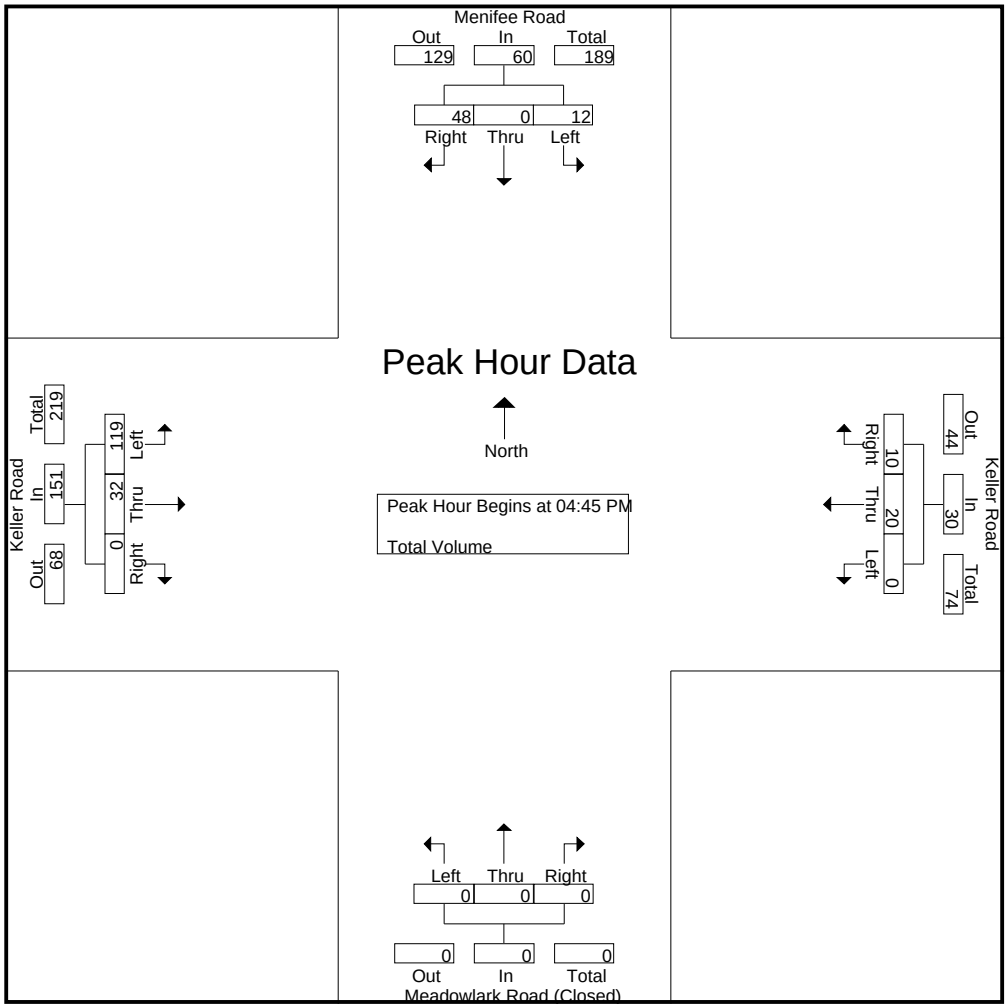

Peak Hour Analysis From 04:00 PM to 05:45 PM - Peak 1 of 1

Peak Hour for Each Approach Begins at:

	04:15 PM				04:45 PM				04:00 PM				05:00 PM			
+0 mins.	2	0	**19**	**21**	0	**7**	2	9	0	0	0	0	23	7	0	30
+15 mins.	2	0	16	18	0	3	1	4	0	0	0	0	31	9	0	40
+30 mins.	**3**	0	10	13	0	3	1	4	0	0	0	0	**34**	5	0	39
+45 mins.	2	0	14	16	0	7	**6**	**13**	0	0	0	0	31	**13**	0	**44**
Total Volume	9	0	59	68	0	20	10	30	0	0	0	0	119	34	0	153
% App. Total	13.2	0	86.8		0	66.7	33.3		0	0	0		77.8	22.2	0	
PHF	.750	.000	.776	.810	.000	.714	.417	.577	.000	.000	.000	.000	.875	.654	.000	.869

Counts Unlimited Inc.
25286 Jaclyn Avenue
Moreno Valley, CA 92557
951-485-7934

City of Murrieta
N/S: Margarita Road
E/W: Murrieta Hot Springs Road
Weather: Sunny

File Name : MURMARMHSAM
Site Code : 9311099
Start Date : 12/8/2009
Page No : 1

Groups Printed- Total Volume

	Private Drive Southbound				Murrieta Hot Springs Road Westbound				Margarita Road Northbound				Murrieta Hot Springs Road Eastbound				
Start Time	Left	Thru	Right	App. Total	Left	Thru	Right	App. Total	Left	Thru	Right	App. Total	Left	Thru	Right	App. Total	Int. Total
07:00 AM	0	0	0	0	30	344	0	374	172	0	20	192	1	147	89	237	803
07:15 AM	0	0	0	0	46	337	4	387	114	0	15	129	2	194	93	289	805
07:30 AM	0	0	1	1	47	254	0	301	85	0	28	113	6	196	130	332	747
07:45 AM	0	2	2	4	71	251	2	324	82	1	29	112	8	235	151	394	834
Total	0	2	3	5	194	1186	6	1386	453	1	92	546	17	772	463	1252	3189
08:00 AM	2	0	0	2	66	235	0	301	143	0	39	182	2	193	124	319	804
08:15 AM	1	0	0	1	53	278	1	332	154	3	35	192	2	192	144	338	863
08:30 AM	0	2	0	2	43	223	1	267	166	2	36	204	9	189	143	341	814
08:45 AM	3	1	1	5	35	263	3	301	211	3	21	235	9	208	170	387	928
Total	6	3	1	10	197	999	5	1201	674	8	131	813	22	782	581	1385	3409
Grand Total	6	5	4	15	391	2185	11	2587	1127	9	223	1359	39	1554	1044	2637	6598
Apprch %	40	33.3	26.7		15.1	84.5	0.4		82.9	0.7	16.4		1.5	58.9	39.6		
Total %	0.1	0.1	0.1	0.2	5.9	33.1	0.2	39.2	17.1	0.1	3.4	20.6	0.6	23.6	15.8	40	

	Private Drive Southbound				Murrieta Hot Springs Road Westbound				Margarita Road Northbound				Murrieta Hot Springs Road Eastbound				
Start Time	Left	Thru	Right	App. Total	Left	Thru	Right	App. Total	Left	Thru	Right	App. Total	Left	Thru	Right	App. Total	Int. Total
Peak Hour Analysis From 07:00 AM to 08:45 AM - Peak 1 of 1																	
Peak Hour for Entire Intersection Begins at 08:00 AM																	
08:00 AM	2	0	0	2	**66**	235	0	301	143	0	**39**	182	2	193	124	319	804
08:15 AM	1	0	0	1	53	**278**	1	**332**	154	**3**	35	192	2	192	144	338	863
08:30 AM	0	**2**	0	2	43	223	1	267	166	2	36	204	**9**	189	143	341	814
08:45 AM	**3**	1	**1**	**5**	35	263	**3**	301	**211**	3	21	**235**	9	**208**	**170**	**387**	**928**
Total Volume	6	3	1	10	197	999	5	1201	674	8	131	813	22	782	581	1385	3409
% App. Total	60	30	10		16.4	83.2	0.4		82.9	1	16.1		1.6	56.5	41.9		
PHF	.500	.375	.250	.500	.746	.898	.417	.904	.799	.667	.840	.865	.611	.940	.854	.895	.918

Counts Unlimited Inc.
25286 Jaclyn Avenue
Moreno Valley, CA 92557
951-485-7934

City of Murrieta
N/S: Margarita Road
E/W: Murrieta Hot Springs Road
Weather: Sunny

File Name : MURMARMHSAM
Site Code : 9311099
Start Date : 12/8/2009
Page No : 2

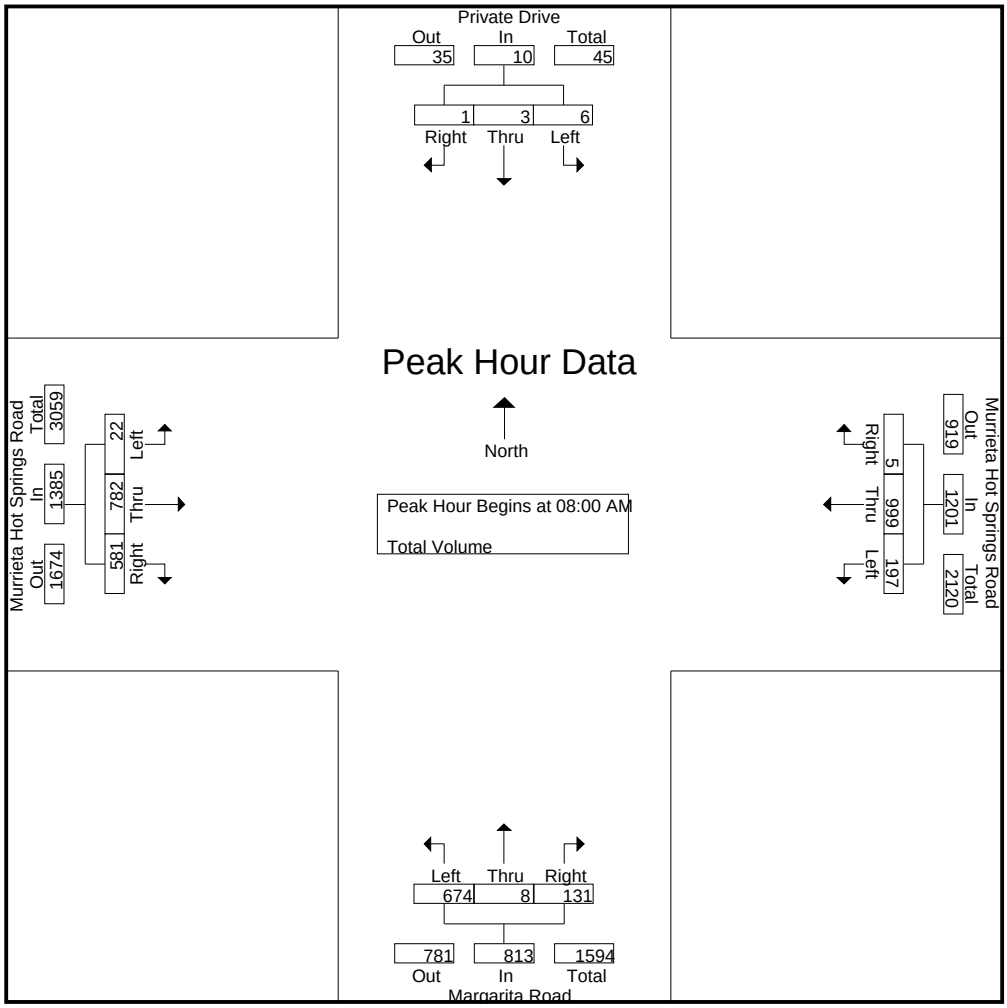

Peak Hour Analysis From 07:00 AM to 08:45 AM - Peak 1 of 1

Peak Hour for Each Approach Begins at:

	08:00 AM				07:00 AM				08:00 AM				07:45 AM			
+0 mins.	2	0	0	2	30	**344**	0	374	143	0	**39**	182	8	**235**	**151**	**394**
+15 mins.	1	0	0	1	46	337	**4**	**387**	154	**3**	35	192	2	193	124	319
+30 mins.	0	**2**	0	2	47	254	0	301	166	2	36	204	2	192	144	338
+45 mins.	**3**	1	**1**	**5**	**71**	251	2	324	**211**	3	21	**235**	**9**	189	143	341
Total Volume	6	3	1	10	194	1186	6	1386	674	8	131	813	21	809	562	1392
% App. Total	60	30	10		14	85.6	0.4		82.9	1	16.1		1.5	58.1	40.4	
PHF	.500	.375	.250	.500	.683	.862	.375	.895	.799	.667	.840	.865	.583	.861	.930	.883

Counts Unlimited Inc.
25286 Jaclyn Avenue
Moreno Valley, CA 92557
951-485-7934

City of Murrieta
N/S: Margarita Road
E/W: Murrieta Hot Springs Road
Weather: Sunny

File Name : MURMARMHSPM
Site Code : 9311099
Start Date : 12/8/2009
Page No : 1

Groups Printed- Total Volume

	Private Drive Southbound				Murrieta Hot Springs Road Westbound				Margarita Road Northbound				Murrieta Hot Springs Road Eastbound				
Start Time	Left	Thru	Right	App. Total	Left	Thru	Right	App. Total	Left	Thru	Right	App. Total	Left	Thru	Right	App. Total	Int. Total
04:00 PM	0	1	4	5	44	225	1	270	230	4	43	277	13	297	195	505	1057
04:15 PM	2	7	4	13	53	208	4	265	199	6	54	259	8	282	160	450	987
04:30 PM	9	5	17	31	47	246	3	296	199	5	47	251	4	293	184	481	1059
04:45 PM	3	2	3	8	46	245	0	291	239	6	52	297	4	295	186	485	1081
Total	14	15	28	57	190	924	8	1122	867	21	196	1084	29	1167	725	1921	4184
05:00 PM	5	5	2	12	55	237	2	294	220	5	68	293	6	296	169	471	1070
05:15 PM	3	3	4	10	38	245	2	285	221	4	58	283	4	357	148	509	1087
05:30 PM	9	3	4	16	56	199	0	255	218	3	75	296	5	262	119	386	953
05:45 PM	4	4	0	8	49	206	0	255	209	3	54	266	5	280	145	430	959
Total	21	15	10	46	198	887	4	1089	868	15	255	1138	20	1195	581	1796	4069
Grand Total	35	30	38	103	388	1811	12	2211	1735	36	451	2222	49	2362	1306	3717	8253
Apprch %	34	29.1	36.9		17.5	81.9	0.5		78.1	1.6	20.3		1.3	63.5	35.1		
Total %	0.4	0.4	0.5	1.2	4.7	21.9	0.1	26.8	21	0.4	5.5	26.9	0.6	28.6	15.8	45	

	Private Drive Southbound				Murrieta Hot Springs Road Westbound				Margarita Road Northbound				Murrieta Hot Springs Road Eastbound				
Start Time	Left	Thru	Right	App. Total	Left	Thru	Right	App. Total	Left	Thru	Right	App. Total	Left	Thru	Right	App. Total	Int. Total
Peak Hour Analysis From 04:00 PM to 05:45 PM - Peak 1 of 1																	
Peak Hour for Entire Intersection Begins at 04:30 PM																	
04:30 PM	**9**	**5**	**17**	**31**	47	**246**	**3**	**296**	199	5	47	251	4	293	184	481	1059
04:45 PM	3	2	3	8	46	245	0	291	**239**	**6**	52	**297**	4	295	**186**	485	1081
05:00 PM	5	5	2	12	**55**	237	2	294	220	5	**68**	293	**6**	296	169	471	1070
05:15 PM	3	3	4	10	38	245	2	285	221	4	58	283	4	**357**	148	**509**	**1087**
Total Volume	20	15	26	61	186	973	7	1166	879	20	225	1124	18	1241	687	1946	4297
% App. Total	32.8	24.6	42.6		16	83.4	0.6		78.2	1.8	20		0.9	63.8	35.3		
PHF	.556	.750	.382	.492	.845	.989	.583	.985	.919	.833	.827	.946	.750	.869	.923	.956	.988

Counts Unlimited Inc.
25286 Jaclyn Avenue
Moreno Valley, CA 92557
951-485-7934

City of Murrieta
N/S: Margarita Road
E/W: Murrieta Hot Springs Road
Weather: Sunny

File Name : MURMARMHSPM
Site Code : 9311099
Start Date : 12/8/2009
Page No : 2

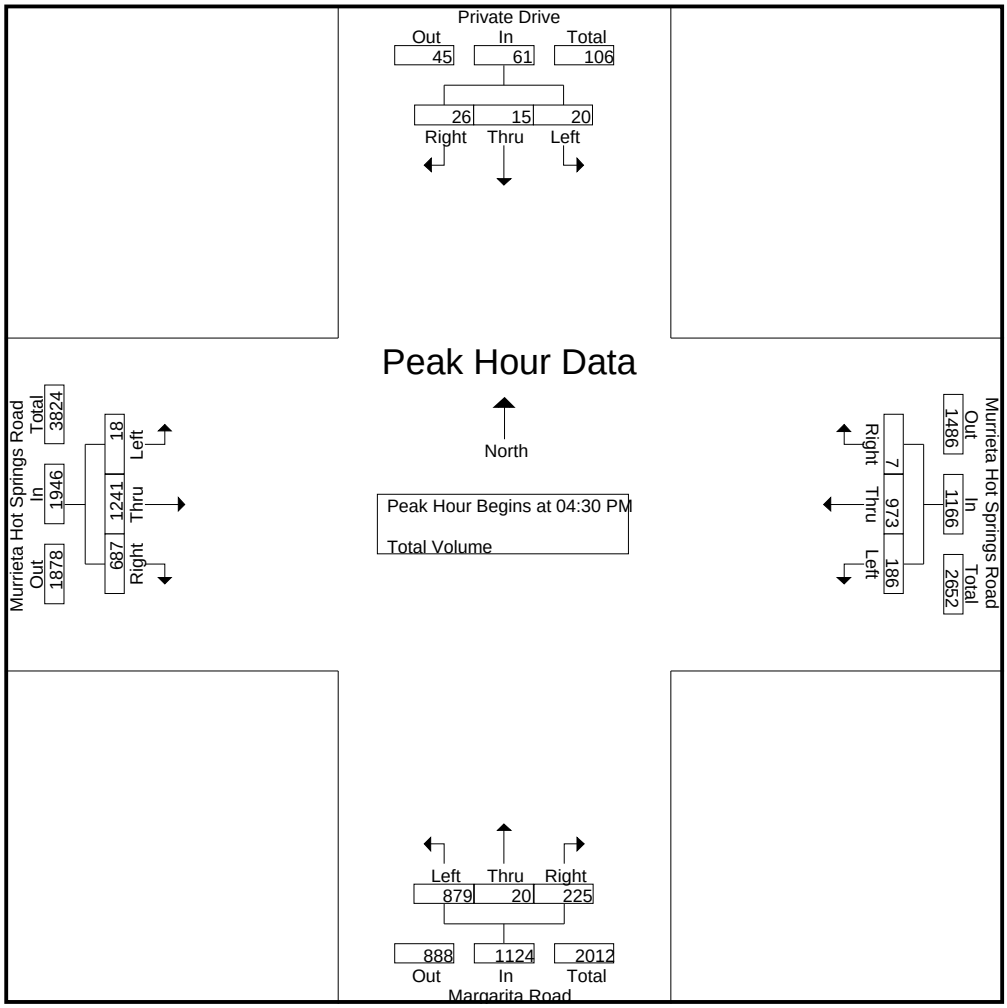

Peak Hour Analysis From 04:00 PM to 05:45 PM - Peak 1 of 1

Peak Hour for Each Approach Begins at:

	04:15 PM				04:30 PM				04:45 PM				04:30 PM			
+0 mins.	2	**7**	4	13	47	**246**	**3**	**296**	**239**	**6**	52	**297**	4	293	184	481
+15 mins.	**9**	5	**17**	**31**	46	245	0	291	220	5	68	293	4	295	**186**	485
+30 mins.	3	2	3	8	**55**	237	2	294	221	4	58	283	**6**	296	169	471
+45 mins.	5	5	2	12	38	245	2	285	218	3	**75**	296	4	**357**	148	**509**
Total Volume	19	19	26	64	186	973	7	1166	898	18	253	1169	18	1241	687	1946
% App. Total	29.7	29.7	40.6		16	83.4	0.6		76.8	1.5	21.6		0.9	63.8	35.3	
PHF	.528	.679	.382	.516	.845	.989	.583	.985	.939	.750	.843	.984	.750	.869	.923	.956

Counts Unlimited Inc.
25286 Jaclyn Avenue
Moreno Valley, CA 92557
951-485-7934

City of Murrieta
N/S: Madison Avenue
E/W: Murrieta Hot Springs Road
Weather: Sunny

File Name : MURMAMHSAM
Site Code : 9311044
Start Date : 12/8/2009
Page No : 1

Groups Printed- Total Volume

	Madson Avenue Southbound				Murrieta Hot Springs Road Westbound				Madson Avenue Northbound				Murrieta Hot Springs Road Eastbound				
Start Time	Left	Thru	Right	App. Total	Left	Thru	Right	App. Total	Left	Thru	Right	App. Total	Left	Thru	Right	App. Total	Int. Total
07:00 AM	23	30	8	61	35	77	22	134	4	15	25	44	10	38	8	56	295
07:15 AM	45	20	7	72	50	130	23	203	5	12	18	35	12	49	8	69	379
07:30 AM	35	29	16	80	62	160	33	255	7	13	26	46	5	62	3	70	451
07:45 AM	43	22	15	80	84	226	18	328	4	20	37	61	6	48	2	56	525
Total	146	101	46	293	231	593	96	920	20	60	106	186	33	197	21	251	1650
08:00 AM	41	25	17	83	72	195	40	307	5	11	16	32	11	63	5	79	501
08:15 AM	45	21	20	86	71	168	25	264	4	15	33	52	15	72	4	91	493
08:30 AM	71	25	25	121	94	166	27	287	7	12	53	72	17	100	14	131	611
08:45 AM	53	49	25	127	117	181	35	333	12	25	45	82	25	83	20	128	670
Total	210	120	87	417	354	710	127	1191	28	63	147	238	68	318	43	429	2275
Grand Total	356	221	133	710	585	1303	223	2111	48	123	253	424	101	515	64	680	3925
Apprch %	50.1	31.1	18.7		27.7	61.7	10.6		11.3	29	59.7		14.9	75.7	9.4		
Total %	9.1	5.6	3.4	18.1	14.9	33.2	5.7	53.8	1.2	3.1	6.4	10.8	2.6	13.1	1.6	17.3	

	Madson Avenue Southbound				Murrieta Hot Springs Road Westbound				Madson Avenue Northbound				Murrieta Hot Springs Road Eastbound				
Start Time	Left	Thru	Right	App. Total	Left	Thru	Right	App. Total	Left	Thru	Right	App. Total	Left	Thru	Right	App. Total	Int. Total
Peak Hour Analysis From 07:00 AM to 08:45 AM - Peak 1 of 1																	
Peak Hour for Entire Intersection Begins at 08:00 AM																	
08:00 AM	41	25	17	83	72	**195**	**40**	307	5	11	16	32	11	63	5	79	501
08:15 AM	45	21	20	86	71	168	25	264	4	15	33	52	15	72	4	91	493
08:30 AM	**71**	25	**25**	121	94	166	27	287	7	12	**53**	72	17	**100**	14	**131**	611
08:45 AM	53	**49**	25	**127**	**117**	181	35	**333**	**12**	**25**	45	**82**	**25**	83	**20**	128	**670**
Total Volume	210	120	87	417	354	710	127	1191	28	63	147	238	68	318	43	429	2275
% App. Total	50.4	28.8	20.9		29.7	59.6	10.7		11.8	26.5	61.8		15.9	74.1	10		
PHF	.739	.612	.870	.821	.756	.910	.794	.894	.583	.630	.693	.726	.680	.795	.538	.819	.849

Counts Unlimited Inc.
25286 Jaclyn Avenue
Moreno Valley, CA 92557
951-485-7934

City of Murrieta
N/S: Madison Avenue
E/W: Murrieta Hot Springs Road
Weather: Sunny

File Name : MURMAMHSAM
Site Code : 9311044
Start Date : 12/8/2009
Page No : 2

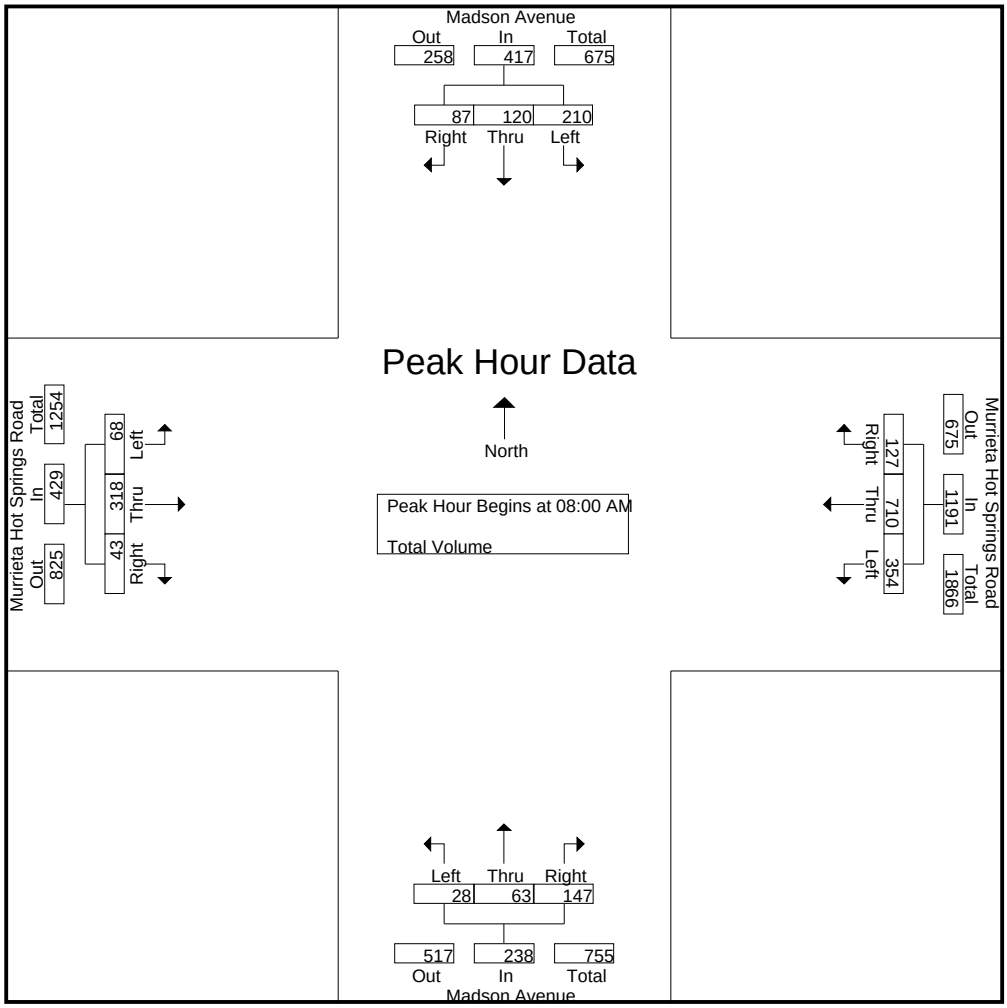

Peak Hour Analysis From 07:00 AM to 08:45 AM - Peak 1 of 1

Peak Hour for Each Approach Begins at:

	08:00 AM				08:00 AM				08:00 AM				08:00 AM			
+0 mins.	41	25	17	83	72	**195**	**40**	307	5	11	16	32	11	63	5	79
+15 mins.	45	21	20	86	71	168	25	264	4	15	33	52	15	72	4	91
+30 mins.	**71**	25	**25**	121	94	166	27	287	7	12	**53**	72	17	**100**	14	**131**
+45 mins.	53	**49**	25	**127**	**117**	181	35	**333**	**12**	**25**	45	**82**	**25**	83	**20**	128
Total Volume	210	120	87	417	354	710	127	1191	28	63	147	238	68	318	43	429
% App. Total	50.4	28.8	20.9		29.7	59.6	10.7		11.8	26.5	61.8		15.9	74.1	10	
PHF	.739	.612	.870	.821	.756	.910	.794	.894	.583	.630	.693	.726	.680	.795	.538	.819

Counts Unlimited Inc.
25286 Jaclyn Avenue
Moreno Valley, CA 92557
951-485-7934

City of Murrieta
N/S: Madison Avenue
E/W: Murrieta Hot Springs Road
Weather: Sunny

File Name : MURMAMHSPM
Site Code : 9311044
Start Date : 12/8/2009
Page No : 1

Groups Printed- Total Volume

	Madson Avenue Southbound				Murrieta Hot Springs Road Westbound				Madson Avenue Northbound				Murrieta Hot Springs Road Eastbound				
Start Time	Left	Thru	Right	App. Total	Left	Thru	Right	App. Total	Left	Thru	Right	App. Total	Left	Thru	Right	App. Total	Int. Total
04:00 PM	121	65	19	205	99	93	39	231	18	58	112	188	41	166	21	228	852
04:15 PM	107	54	27	188	99	118	41	258	11	80	144	235	48	197	38	283	964
04:30 PM	129	53	14	196	116	109	47	272	21	74	143	238	52	186	23	261	967
04:45 PM	100	52	13	165	111	119	45	275	17	63	118	198	51	228	18	297	935
Total	457	224	73	754	425	439	172	1036	67	275	517	859	192	777	100	1069	3718
05:00 PM	123	53	13	189	93	78	29	200	14	69	157	240	55	257	24	336	965
05:15 PM	89	37	8	134	115	97	33	245	8	66	143	217	63	237	26	326	922
05:30 PM	112	42	17	171	120	75	31	226	18	59	131	208	46	176	15	237	842
05:45 PM	69	42	6	117	121	87	34	242	19	58	112	189	42	152	25	219	767
Total	393	174	44	611	449	337	127	913	59	252	543	854	206	822	90	1118	3496
Grand Total	850	398	117	1365	874	776	299	1949	126	527	1060	1713	398	1599	190	2187	7214
Apprch %	62.3	29.2	8.6		44.8	39.8	15.3		7.4	30.8	61.9		18.2	73.1	8.7		
Total %	11.8	5.5	1.6	18.9	12.1	10.8	4.1	27	1.7	7.3	14.7	23.7	5.5	22.2	2.6	30.3	

	Madson Avenue Southbound				Murrieta Hot Springs Road Westbound				Madson Avenue Northbound				Murrieta Hot Springs Road Eastbound				
Start Time	Left	Thru	Right	App. Total	Left	Thru	Right	App. Total	Left	Thru	Right	App. Total	Left	Thru	Right	App. Total	Int. Total
Peak Hour Analysis From 04:00 PM to 05:45 PM - Peak 1 of 1																	
Peak Hour for Entire Intersection Begins at 04:15 PM																	
04:15 PM	107	**54**	**27**	188	99	118	41	258	11	**80**	144	235	48	197	**38**	283	964
04:30 PM	**129**	53	14	**196**	**116**	109	**47**	272	**21**	74	143	238	52	186	23	261	**967**
04:45 PM	100	52	13	165	111	**119**	45	**275**	17	63	118	198	51	228	18	297	935
05:00 PM	123	53	13	189	93	78	29	200	14	69	**157**	**240**	**55**	**257**	24	**336**	965
Total Volume	459	212	67	738	419	424	162	1005	63	286	562	911	206	868	103	1177	3831
% App. Total	62.2	28.7	9.1		41.7	42.2	16.1		6.9	31.4	61.7		17.5	73.7	8.8		
PHF	.890	.981	.620	.941	.903	.891	.862	.914	.750	.894	.895	.949	.936	.844	.678	.876	.990

Counts Unlimited Inc.
25286 Jaclyn Avenue
Moreno Valley, CA 92557
951-485-7934

City of Murrieta
N/S: Madison Avenue
E/W: Murrieta Hot Springs Road
Weather: Sunny

File Name : MURMAMHSPM
Site Code : 9311044
Start Date : 12/8/2009
Page No : 2

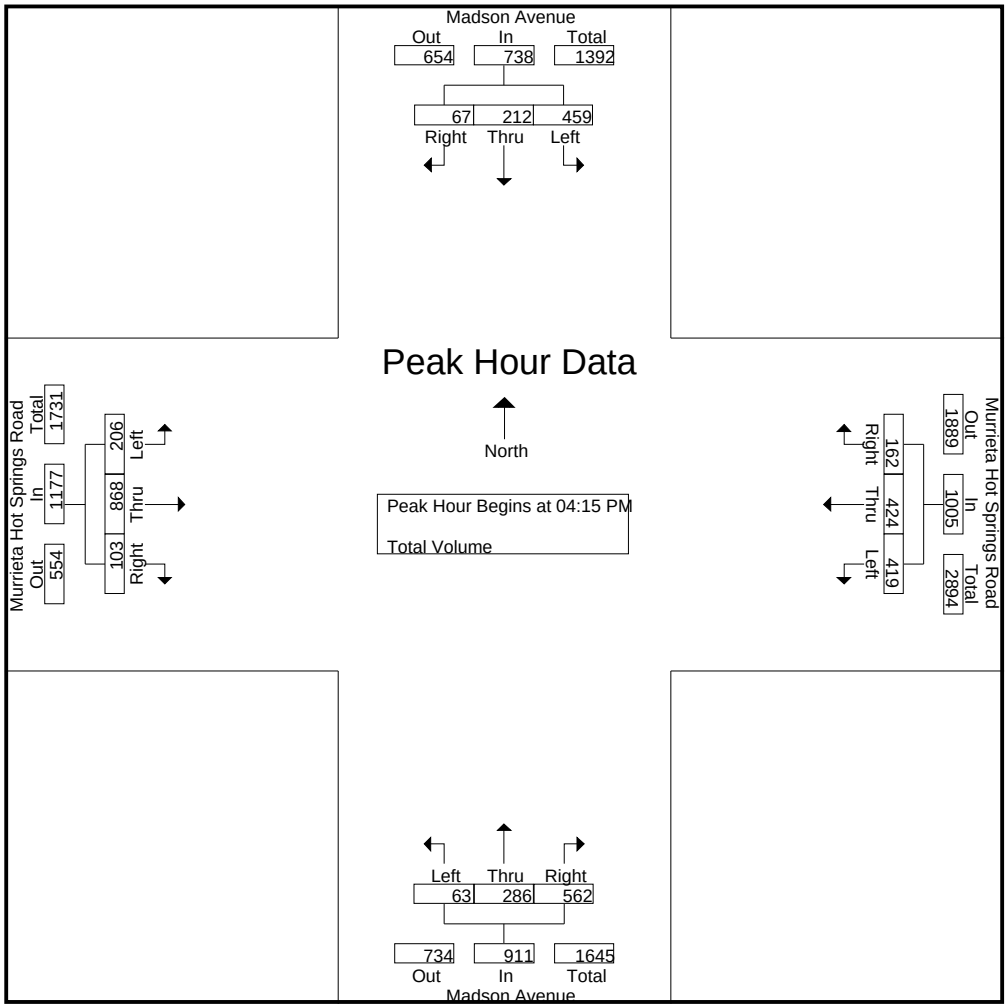

Peak Hour Analysis From 04:00 PM to 05:45 PM - Peak 1 of 1

Peak Hour for Each Approach Begins at:

	04:00 PM				04:00 PM				04:15 PM				04:30 PM			
+0 mins.	121	**65**	19	**205**	99	93	39	231	11	**80**	144	235	52	186	23	261
+15 mins.	107	54	**27**	188	99	118	41	258	**21**	74	143	238	51	228	18	297
+30 mins.	**129**	53	14	196	**116**	109	**47**	272	17	63	118	198	55	**257**	24	**336**
+45 mins.	100	52	13	165	111	**119**	45	**275**	14	69	**157**	**240**	**63**	237	**26**	326
Total Volume	457	224	73	754	425	439	172	1036	63	286	562	911	221	908	91	1220
% App. Total	60.6	29.7	9.7		41	42.4	16.6		6.9	31.4	61.7		18.1	74.4	7.5	
PHF	.886	.862	.676	.920	.916	.922	.915	.942	.750	.894	.895	.949	.877	.883	.875	.908

Counts Unlimited Inc.
25286 Jaclyn Avenue
Moreno Valley, CA 92557
951-485-7934

City of Murrieta
N/S: Jefferson Avenue
E/W: Murrieta Hot Springs Road
Weather: Sunny

File Name : MURJEMHSAM
Site Code : 9311017
Start Date : 12/8/2009
Page No : 1

Groups Printed- Total Volume

	Jefferson Avenue Southbound			Murrieta Hot Springs Road Westbound			Jefferson Avenue Northbound			
Start Time	Left	Thru	App. Total	Left	Right	App. Total	Thru	Right	App. Total	Int. Total
07:00 AM	31	63	94	103	26	129	25	27	52	275
07:15 AM	34	108	142	106	24	130	23	29	52	324
07:30 AM	48	131	179	157	16	173	23	26	49	401
07:45 AM	30	158	188	217	40	257	25	29	54	499
Total	143	460	603	583	106	689	96	111	207	1499
08:00 AM	46	134	180	189	44	233	41	31	72	485
08:15 AM	43	141	184	139	47	186	52	37	89	459
08:30 AM	71	129	200	147	53	200	52	56	108	508
08:45 AM	66	151	217	177	46	223	58	61	119	559
Total	226	555	781	652	190	842	203	185	388	2011
Grand Total	369	1015	1384	1235	296	1531	299	296	595	3510
Apprch %	26.7	73.3		80.7	19.3		50.3	49.7		
Total %	10.5	28.9	39.4	35.2	8.4	43.6	8.5	8.4	17	

	Jefferson Avenue Southbound			Murrieta Hot Springs Road Westbound			Jefferson Avenue Northbound			
Start Time	Left	Thru	App. Total	Left	Right	App. Total	Thru	Right	App. Total	Int. Total
Peak Hour Analysis From 07:00 AM to 08:45 AM - Peak 1 of 1										
Peak Hour for Entire Intersection Begins at 08:00 AM										
08:00 AM	46	134	180	**189**	44	**233**	41	31	72	485
08:15 AM	43	141	184	139	47	186	52	37	89	459
08:30 AM	**71**	129	200	147	**53**	200	52	56	108	508
08:45 AM	66	**151**	**217**	177	46	223	**58**	**61**	**119**	**559**
Total Volume	226	555	781	652	190	842	203	185	388	2011
% App. Total	28.9	71.1		77.4	22.6		52.3	47.7		
PHF	.796	.919	.900	.862	.896	.903	.875	.758	.815	.899

Counts Unlimited Inc.
25286 Jaclyn Avenue
Moreno Valley, CA 92557
951-485-7934

City of Murrieta
N/S: Jefferson Avenue
E/W: Murrieta Hot Springs Road
Weather: Sunny

File Name : MURJEMHSAM
Site Code : 9311017
Start Date : 12/8/2009
Page No : 2

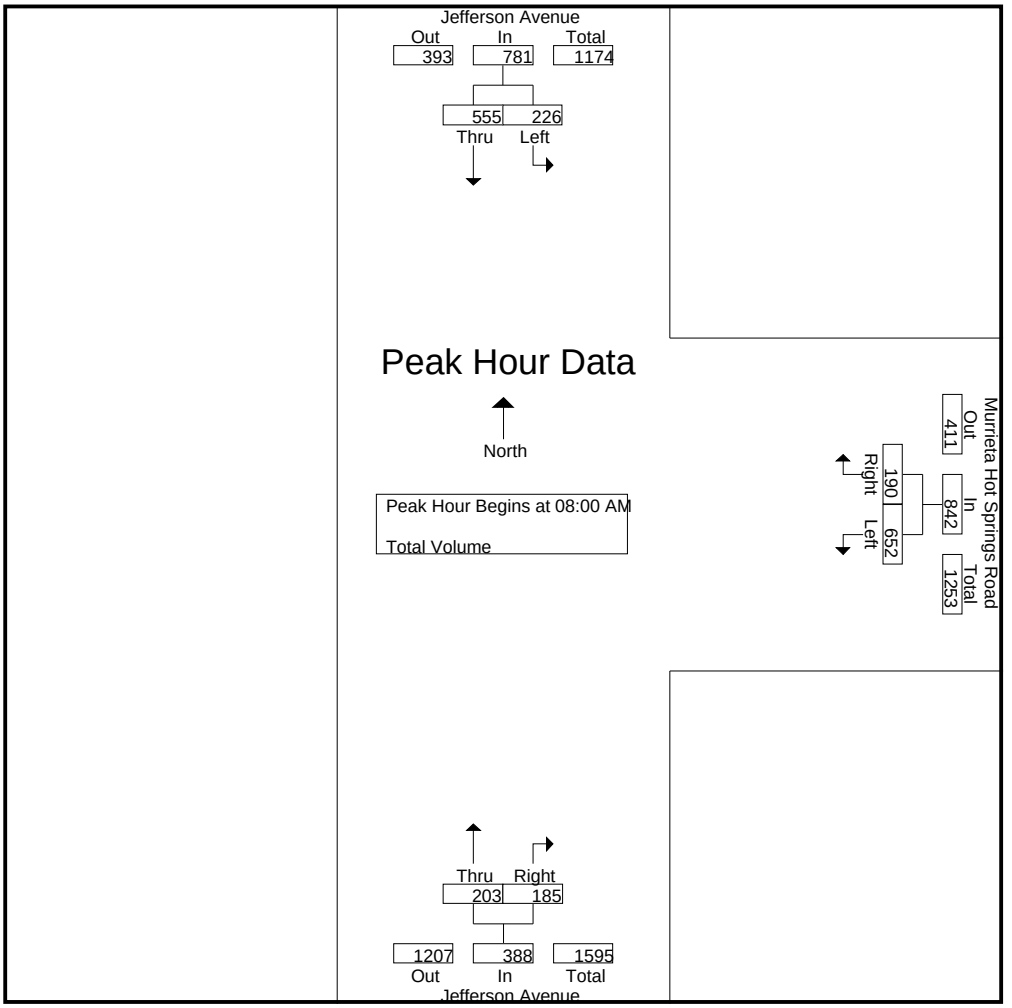

Peak Hour Analysis From 07:00 AM to 08:45 AM - Peak 1 of 1

Peak Hour for Each Approach Begins at:

	08:00 AM			07:45 AM			08:00 AM		
+0 mins.	46	134	180	**217**	40	**257**	41	31	72
+15 mins.	43	141	184	189	44	233	52	37	89
+30 mins.	**71**	129	200	139	47	186	52	56	108
+45 mins.	66	**151**	**217**	147	**53**	200	**58**	**61**	**119**
Total Volume	226	555	781	692	184	876	203	185	388
% App. Total	28.9	71.1		79	21		52.3	47.7	
PHF	.796	.919	.900	.797	.868	.852	.875	.758	.815

Counts Unlimited Inc.
25286 Jaclyn Avenue
Moreno Valley, CA 92557
951-485-7934

City of Murrieta
N/S: Jefferson Avenue
E/W: Murrieta Hot Springs Road
Weather: Sunny

File Name : MURJEMHSPM
Site Code : 9311017
Start Date : 12/8/2009
Page No : 1

Groups Printed- Total Volume

	Jefferson Avenue Southbound			Murrieta Hot Springs Road Westbound			Jefferson Avenue Northbound			
Start Time	Left	Thru	App. Total	Left	Right	App. Total	Thru	Right	App. Total	Int. Total
04:00 PM	77	101	178	103	60	163	157	187	344	685
04:15 PM	84	111	195	106	59	165	189	186	375	735
04:30 PM	73	92	165	81	62	143	174	202	376	684
04:45 PM	59	83	142	79	66	145	227	219	446	733
Total	293	387	680	369	247	616	747	794	1541	2837
05:00 PM	84	79	163	88	65	153	250	282	532	848
05:15 PM	59	75	134	41	53	94	314	273	587	815
05:30 PM	57	64	121	80	41	121	215	211	426	668
05:45 PM	58	67	125	68	49	117	214	166	380	622
Total	258	285	543	277	208	485	993	932	1925	2953
Grand Total	551	672	1223	646	455	1101	1740	1726	3466	5790
Apprch %	45.1	54.9		58.7	41.3		50.2	49.8		
Total %	9.5	11.6	21.1	11.2	7.9	19	30.1	29.8	59.9	

	Jefferson Avenue Southbound			Murrieta Hot Springs Road Westbound			Jefferson Avenue Northbound			
Start Time	Left	Thru	App. Total	Left	Right	App. Total	Thru	Right	App. Total	Int. Total
Peak Hour Analysis From 04:00 PM to 05:45 PM - Peak 1 of 1										
Peak Hour for Entire Intersection Begins at 04:30 PM										
04:30 PM	73	**92**	**165**	81	62	143	174	202	376	684
04:45 PM	59	83	142	79	**66**	145	227	219	446	733
05:00 PM	**84**	79	163	**88**	65	**153**	250	**282**	532	**848**
05:15 PM	59	75	134	41	53	94	**314**	273	**587**	815
Total Volume	275	329	604	289	246	535	965	976	1941	3080
% App. Total	45.5	54.5		54	46		49.7	50.3		
PHF	.818	.894	.915	.821	.932	.874	.768	.865	.827	.908

Counts Unlimited Inc.
25286 Jaclyn Avenue
Moreno Valley, CA 92557
951-485-7934

City of Murrieta
N/S: Jefferson Avenue
E/W: Murrieta Hot Springs Road
Weather: Sunny

File Name : MURJEMHSPM
Site Code : 9311017
Start Date : 12/8/2009
Page No : 2

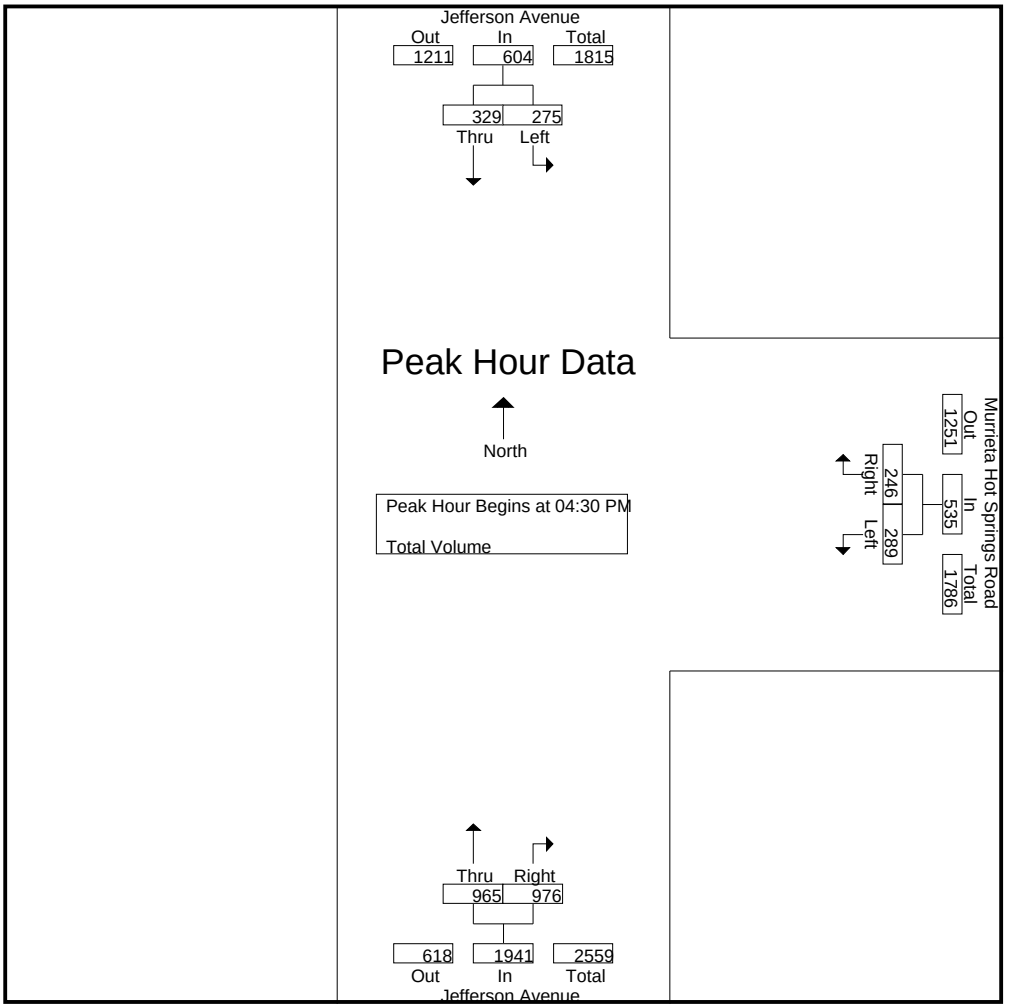

Peak Hour Analysis From 04:00 PM to 05:45 PM - Peak 1 of 1

Peak Hour for Each Approach Begins at:

	04:00 PM			04:00 PM			04:45 PM		
+0 mins.	77	101	178	103	60	163	227	219	446
+15 mins.	**84**	**111**	**195**	**106**	59	**165**	250	**282**	532
+30 mins.	73	92	165	81	62	143	**314**	273	**587**
+45 mins.	59	83	142	79	**66**	145	215	211	426
Total Volume	293	387	680	369	247	616	1006	985	1991
% App. Total	43.1	56.9		59.9	40.1		50.5	49.5	
PHF	.872	.872	.872	.870	.936	.933	.801	.873	.848

Counts Unlimited Inc.
25286 Jaclyn Avenue
Moreno Valley, CA 92557
951-485-7934

City of Murrieta
N/S: Jefferson Avenue
E/W: Guava Street
Weather: Sunny

File Name : MURJEGUAM
Site Code : 9311037
Start Date : 12/8/2009
Page No : 1

Groups Printed- Total Volume

	Jefferson Aveue Southbound					Guava Street Westbound					Jefferson Aveue Northbound					Guava Street (Closed) Eastbound					
Start Time	Left	Thru	Right	Peds	App. Total	Left	Thru	Right	Peds	App. Total	Left	Thru	Right	Peds	App. Total	Left	Thru	Right	Peds	App. Total	Int. Total
07:00 AM	3	162	0	0	165	3	0	1	0	4	0	46	2	0	48	0	0	0	0	0	217
07:15 AM	1	204	0	0	205	10	0	0	0	10	0	54	1	0	55	0	0	0	0	0	270
07:30 AM	2	270	0	0	272	6	0	1	0	7	0	52	4	0	56	0	0	0	0	0	335
07:45 AM	2	373	0	0	375	10	0	0	0	10	0	57	1	0	58	0	0	0	0	0	443
Total	8	1009	0	0	1017	29	0	2	0	31	0	209	8	0	217	0	0	0	0	0	1265
08:00 AM	1	322	0	0	323	6	0	5	0	11	0	67	6	0	73	0	0	0	0	0	407
08:15 AM	1	252	0	0	253	9	0	6	0	15	0	84	2	0	86	0	0	0	0	0	354
08:30 AM	6	251	0	0	257	5	0	5	0	10	0	111	2	0	113	0	0	0	0	0	380
08:45 AM	5	314	0	0	319	6	0	6	0	12	0	106	6	0	112	0	0	0	0	0	443
Total	13	1139	0	0	1152	26	0	22	0	48	0	368	16	0	384	0	0	0	0	0	1584
Grand Total	21	2148	0	0	2169	55	0	24	0	79	0	577	24	0	601	0	0	0	0	0	2849
Apprch %	1	99	0	0		69.6	0	30.4	0		0	96	4	0		0	0	0	0		
Total %	0.7	75.4	0	0	76.1	1.9	0	0.8	0	2.8	0	20.3	0.8	0	21.1	0	0	0	0	0	

	Jefferson Aveue Southbound					Guava Street Westbound					Jefferson Aveue Northbound					Guava Street (Closed) Eastbound					
Start Time	Left	Thru	Right	Peds	App. Total	Left	Thru	Right	Peds	App. Total	Left	Thru	Right	Peds	App. Total	Left	Thru	Right	Peds	App. Total	Int. Total
Peak Hour Analysis From 07:00 AM to 08:45 AM - Peak 1 of 1																					
Peak Hour for Entire Intersection Begins at 07:45 AM																					
07:45 AM	2	**373**	0	0	**375**	**10**	0	0	0	10	0	57	1	0	58	0	0	0	0	0	**443**
08:00 AM	1	322	0	0	323	6	0	5	0	11	0	67	**6**	0	73	0	0	0	0	0	407
08:15 AM	1	252	0	0	253	9	0	**6**	0	**15**	0	84	2	0	86	0	0	0	0	0	354
08:30 AM	**6**	251	0	0	257	5	0	5	0	10	0	**111**	2	0	**113**	0	0	0	0	0	380
Total Volume	10	1198	0	0	1208	30	0	16	0	46	0	319	11	0	330	0	0	0	0	0	1584
% App. Total	0.8	99.2	0	0		65.2	0	34.8	0		0	96.7	3.3	0		0	0	0	0		
PHF	.417	.803	.000	.000	.805	.750	.000	.667	.000	.767	.000	.718	.458	.000	.730	.000	.000	.000	.000	.000	.894

Counts Unlimited Inc.
25286 Jaclyn Avenue
Moreno Valley, CA 92557
951-485-7934

City of Murrieta
N/S: Jefferson Avenue
E/W: Guava Street
Weather: Sunny

File Name : MURJEGUAM
Site Code : 9311037
Start Date : 12/8/2009
Page No : 2

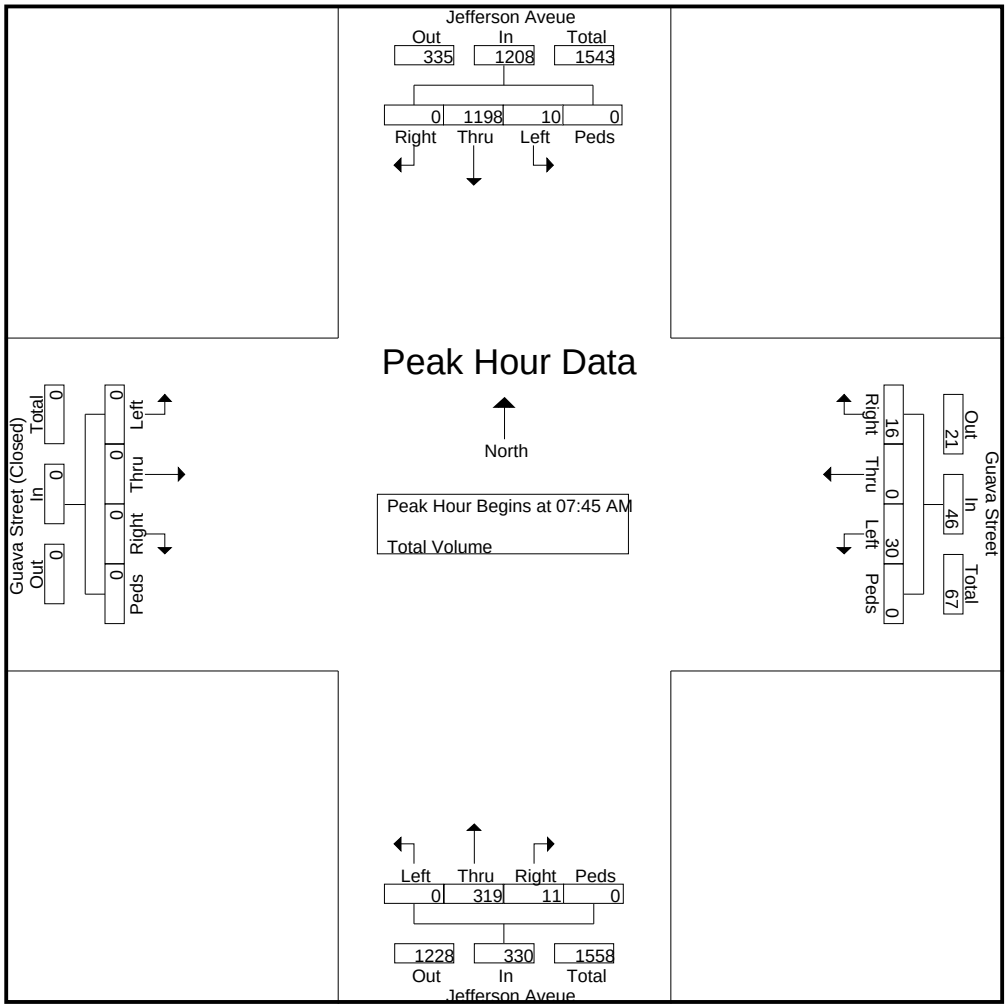

Peak Hour Analysis From 07:00 AM to 08:45 AM - Peak 1 of 1

Peak Hour for Each Approach Begins at:

	07:30 AM					08:00 AM					08:00 AM					07:00 AM				
+0 mins.	**2**	270	0	0	272	6	0	5	0	11	0	67	**6**	0	73	0	0	0	0	0
+15 mins.	2	**373**	0	0	**375**	**9**	0	**6**	0	**15**	0	84	2	0	86	0	0	0	0	0
+30 mins.	1	322	0	0	323	5	0	5	0	10	0	**111**	2	0	**113**	0	0	0	0	0
+45 mins.	1	252	0	0	253	6	0	6	0	12	0	106	6	0	112	0	0	0	0	0
Total Volume	6	1217	0	0	1223	26	0	22	0	48	0	368	16	0	384	0	0	0	0	0
% App. Total	0.5	99.5	0	0		54.2	0	45.8	0		0	95.8	4.2	0		0	0	0	0	
PHF	.750	.816	.000	.000	.815	.722	.000	.917	.000	.800	.000	.829	.667	.000	.850	.000	.000	.000	.000	.000

Counts Unlimited Inc.
25286 Jaclyn Avenue
Moreno Valley, CA 92557
951-485-7934

City of Murrieta
N/S: Jefferson Avenue
E/W: Guava Street
Weather: Sunny

File Name : MURJEGUPM
Site Code : 9311037
Start Date : 12/8/2009
Page No : 1

Groups Printed- Total Volume

	Jefferson Avenue Southbound					Guava Street Westbound					Jefferson Avenue Northbound					Guava Street (Closed) Eastbound					
Start Time	Left	Thru	Right	Peds	App. Total	Left	Thru	Right	Peds	App. Total	Left	Thru	Right	Peds	App. Total	Left	Thru	Right	Peds	App. Total	Int. Total
04:00 PM	4	172	0	0	176	5	0	7	0	12	0	361	15	0	376	0	0	0	0	0	564
04:15 PM	2	198	0	0	200	6	0	6	0	12	0	337	17	0	354	0	0	0	0	0	566
04:30 PM	4	174	0	0	178	3	0	3	0	6	0	359	22	0	381	0	0	0	0	0	565
04:45 PM	3	160	0	0	163	0	0	4	0	4	0	445	14	0	459	0	0	0	0	0	626
Total	13	704	0	0	717	14	0	20	0	34	0	1502	68	0	1570	0	0	0	0	0	2321
05:00 PM	5	153	0	0	158	3	0	6	0	9	0	553	25	0	578	0	0	0	0	0	745
05:15 PM	2	127	0	0	129	5	0	4	0	9	0	573	23	0	596	0	0	0	0	0	734
05:30 PM	6	120	0	0	126	1	0	5	0	6	0	424	13	0	437	0	0	0	0	0	569
05:45 PM	4	134	0	0	138	3	0	3	0	6	0	362	5	0	367	0	0	0	0	0	511
Total	17	534	0	0	551	12	0	18	0	30	0	1912	66	0	1978	0	0	0	0	0	2559
Grand Total	30	1238	0	0	1268	26	0	38	0	64	0	3414	134	0	3548	0	0	0	0	0	4880
Apprch %	2.4	97.6	0	0		40.6	0	59.4	0		0	96.2	3.8	0		0	0	0	0		
Total %	0.6	25.4	0	0	26	0.5	0	0.8	0	1.3	0	70	2.7	0	72.7	0	0	0	0	0	

	Jefferson Avenue Southbound					Guava Street Westbound					Jefferson Avenue Northbound					Guava Street (Closed) Eastbound					
Start Time	Left	Thru	Right	Peds	App. Total	Left	Thru	Right	Peds	App. Total	Left	Thru	Right	Peds	App. Total	Left	Thru	Right	Peds	App. Total	Int. Total
Peak Hour Analysis From 04:00 PM to 05:45 PM - Peak 1 of 1																					
Peak Hour for Entire Intersection Begins at 04:45 PM																					
04:45 PM	3	**160**	0	0	**163**	0	0	4	0	4	0	445	14	0	459	0	0	0	0	0	626
05:00 PM	5	153	0	0	158	3	0	**6**	0	**9**	0	553	**25**	0	578	0	0	0	0	0	**745**
05:15 PM	2	127	0	0	129	**5**	0	4	0	9	0	**573**	23	0	**596**	0	0	0	0	0	734
05:30 PM	**6**	120	0	0	126	1	0	5	0	6	0	424	13	0	437	0	0	0	0	0	569
Total Volume	16	560	0	0	576	9	0	19	0	28	0	1995	75	0	2070	0	0	0	0	0	2674
% App. Total	2.8	97.2	0	0		32.1	0	67.9	0		0	96.4	3.6	0		0	0	0	0		
PHF	.667	.875	.000	.000	.883	.450	.000	.792	.000	.778	.000	.870	.750	.000	.868	.000	.000	.000	.000	.000	.897

Counts Unlimited Inc.
25286 Jaclyn Avenue
Moreno Valley, CA 92557
951-485-7934

City of Murrieta
N/S: Jefferson Avenue
E/W: Guava Street
Weather: Sunny

File Name : MURJEGUPM
Site Code : 9311037
Start Date : 12/8/2009
Page No : 2

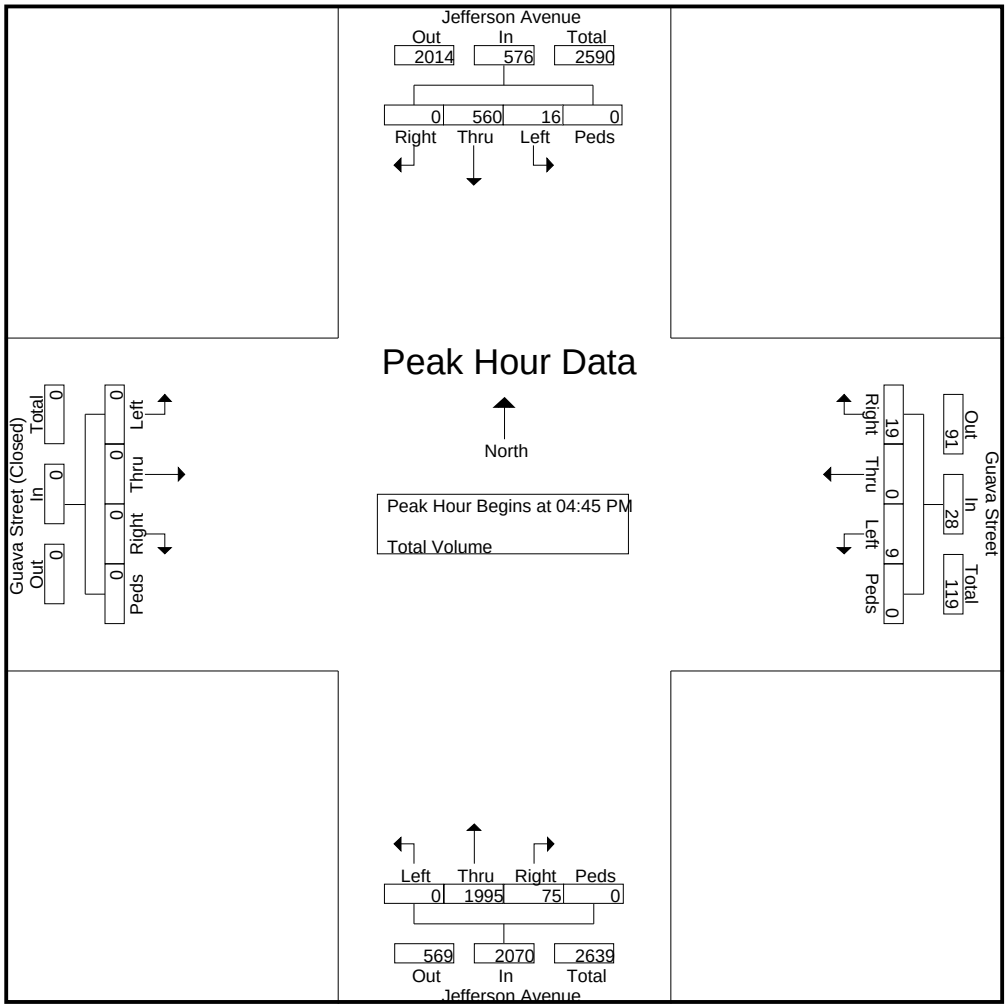

Peak Hour Analysis From 04:00 PM to 05:45 PM - Peak 1 of 1

Peak Hour for Each Approach Begins at:

	04:00 PM					04:00 PM					04:45 PM					04:00 PM				
+0 mins.	**4**	172	0	0	176	5	0	**7**	0	**12**	0	445	14	0	459	0	0	0	0	0
+15 mins.	2	**198**	0	0	**200**	**6**	0	6	0	12	0	553	**25**	0	578	0	0	0	0	0
+30 mins.	4	174	0	0	178	3	0	3	0	6	0	**573**	23	0	**596**	0	0	0	0	0
+45 mins.	3	160	0	0	163	0	0	4	0	4	0	424	13	0	437	0	0	0	0	0
Total Volume	13	704	0	0	717	14	0	20	0	34	0	1995	75	0	2070	0	0	0	0	0
% App. Total	1.8	98.2	0	0		41.2	0	58.8	0		0	96.4	3.6	0		0	0	0	0	
PHF	.813	.889	.000	.000	.896	.583	.000	.714	.000	.708	.000	.870	.750	.000	.868	.000	.000	.000	.000	.000

Counts Unlimited Inc.
25286 Jaclyn Avenue
Moreno Valley, CA 92557
951-485-7934

City of Murrieta
N/S: Jefferson Avenue
E/W: Cherry Street
Weather: Cloudy

File Name : MURJECHAM
Site Code : 9311043
Start Date : 12/9/2009
Page No : 1

Groups Printed- Total Volume

	Jefferson Avenue Southbound			Jefferson Avenue Northbound			Cherry Street Eastbound			
Start Time	Thru	Right	App. Total	Left	Thru	App. Total	Left	Right	App. Total	Int. Total
07:00 AM	93	2	95	10	67	77	0	4	4	176
07:15 AM	111	2	113	23	69	92	0	4	4	209
07:30 AM	151	4	155	25	83	108	0	7	7	270
07:45 AM	207	6	213	25	137	162	2	11	13	388
Total	562	14	576	83	356	439	2	26	28	1043
08:00 AM	179	9	188	25	145	170	1	7	8	366
08:15 AM	194	7	201	23	129	152	4	14	18	371
08:30 AM	162	6	168	32	142	174	3	18	21	363
08:45 AM	162	0	162	18	163	181	0	15	15	358
Total	697	22	719	98	579	677	8	54	62	1458
Grand Total	1259	36	1295	181	935	1116	10	80	90	2501
Apprch %	97.2	2.8		16.2	83.8		11.1	88.9		
Total %	50.3	1.4	51.8	7.2	37.4	44.6	0.4	3.2	3.6	

	Jefferson Avenue Southbound			Jefferson Avenue Northbound			Cherry Street Eastbound			
Start Time	Thru	Right	App. Total	Left	Thru	App. Total	Left	Right	App. Total	Int. Total
Peak Hour Analysis From 07:00 AM to 08:45 AM - Peak 1 of 1										
Peak Hour for Entire Intersection Begins at 07:45 AM										
07:45 AM	**207**	6	**213**	25	137	162	2	11	13	**388**
08:00 AM	179	**9**	188	25	**145**	170	1	7	8	366
08:15 AM	194	7	201	23	129	152	**4**	14	18	371
08:30 AM	162	6	168	**32**	142	**174**	3	**18**	**21**	363
Total Volume	742	28	770	105	553	658	10	50	60	1488
% App. Total	96.4	3.6		16	84		16.7	83.3		
PHF	.896	.778	.904	.820	.953	.945	.625	.694	.714	.959

Counts Unlimited Inc.
25286 Jaclyn Avenue
Moreno Valley, CA 92557
951-485-7934

City of Murrieta
N/S: Jefferson Avenue
E/W: Cherry Street
Weather: Cloudy

File Name : MURJECHAM
Site Code : 9311043
Start Date : 12/9/2009
Page No : 2

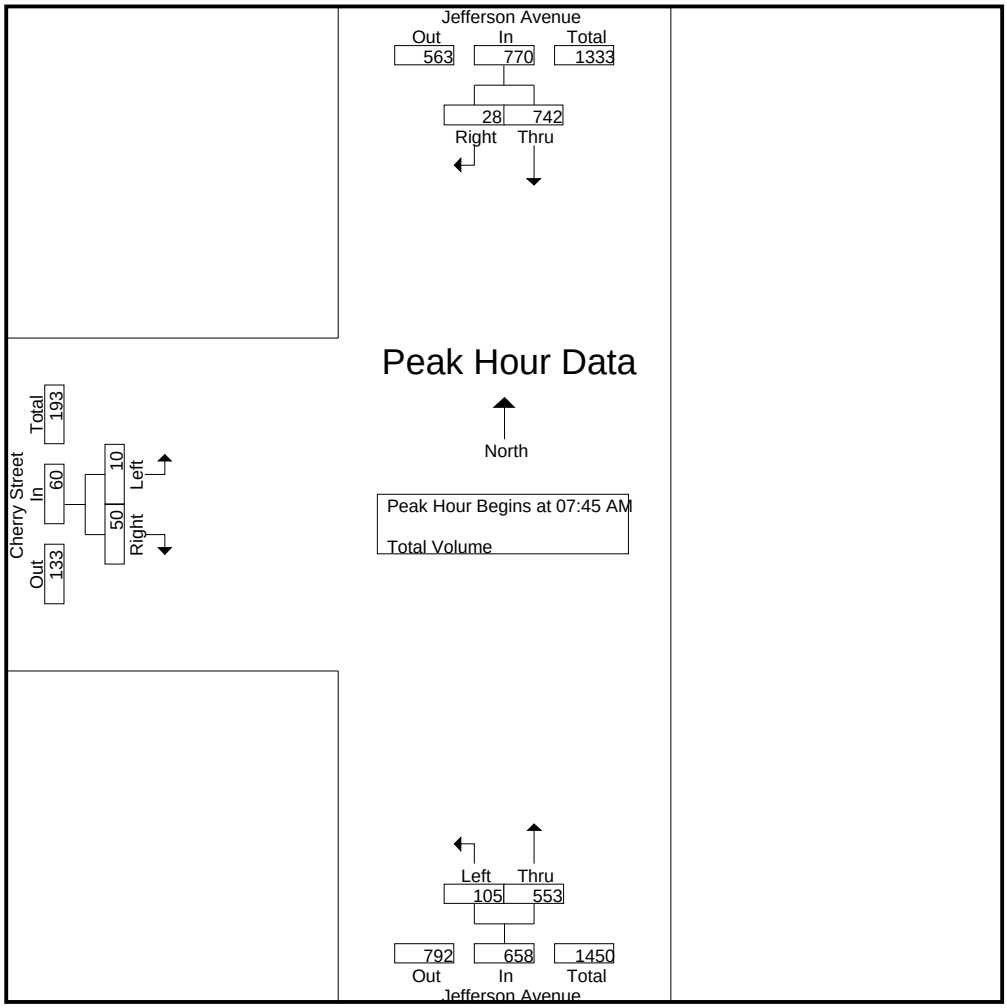

Peak Hour Analysis From 07:00 AM to 08:45 AM - Peak 1 of 1

Peak Hour for Each Approach Begins at:

	07:45 AM			08:00 AM			08:00 AM		
+0 mins.	**207**	6	**213**	25	145	170	1	7	8
+15 mins.	179	**9**	188	23	129	152	**4**	14	18
+30 mins.	194	7	201	**32**	142	174	3	**18**	**21**
+45 mins.	162	6	168	18	**163**	**181**	0	15	15
Total Volume	742	28	770	98	579	677	8	54	62
% App. Total	96.4	3.6		14.5	85.5		12.9	87.1	
PHF	.896	.778	.904	.766	.888	.935	.500	.750	.738

Counts Unlimited Inc.
25286 Jaclyn Avenue
Moreno Valley, CA 92557
951-485-7934

City of Murrieta
N/S: Jefferson Avenue
E/W: Cherry Street
Weather: Cloudy

File Name : MURJECHPM
Site Code : 9311043
Start Date : 12/9/2009
Page No : 1

Groups Printed- Total Volume

	Jefferson Avenue Southbound			Jefferson Avenue Northbound			Cherry Street Eastbound			
Start Time	Thru	Right	App. Total	Left	Thru	App. Total	Left	Right	App. Total	Int. Total
04:00 PM	249	3	252	17	319	336	2	26	28	616
04:15 PM	209	2	211	20	353	373	2	13	15	599
04:30 PM	235	2	237	9	364	373	0	18	18	628
04:45 PM	187	2	189	9	336	345	0	19	19	553
Total	880	9	889	55	1372	1427	4	76	80	2396
05:00 PM	220	3	223	12	343	355	1	13	14	592
05:15 PM	164	3	167	8	421	429	1	12	13	609
05:30 PM	158	1	159	8	343	351	0	14	14	524
05:45 PM	175	3	178	10	231	241	1	8	9	428
Total	717	10	727	38	1338	1376	3	47	50	2153
Grand Total	1597	19	1616	93	2710	2803	7	123	130	4549
Apprch %	98.8	1.2		3.3	96.7		5.4	94.6		
Total %	35.1	0.4	35.5	2	59.6	61.6	0.2	2.7	2.9	

	Jefferson Avenue Southbound			Jefferson Avenue Northbound			Cherry Street Eastbound			
Start Time	Thru	Right	App. Total	Left	Thru	App. Total	Left	Right	App. Total	Int. Total
Peak Hour Analysis From 04:00 PM to 05:45 PM - Peak 1 of 1										
Peak Hour for Entire Intersection Begins at 04:00 PM										
04:00 PM	**249**	**3**	**252**	17	319	336	**2**	**26**	**28**	616
04:15 PM	209	2	211	**20**	353	**373**	2	13	15	599
04:30 PM	235	2	237	9	**364**	373	0	18	18	**628**
04:45 PM	187	2	189	9	336	345	0	19	19	553
Total Volume	880	9	889	55	1372	1427	4	76	80	2396
% App. Total	99	1		3.9	96.1		5	95		
PHF	.884	.750	.882	.688	.942	.956	.500	.731	.714	.954

Counts Unlimited Inc.
25286 Jaclyn Avenue
Moreno Valley, CA 92557
951-485-7934

City of Murrieta
N/S: Jefferson Avenue
E/W: Cherry Street
Weather: Cloudy

File Name : MURJECHPM
Site Code : 9311043
Start Date : 12/9/2009
Page No : 2

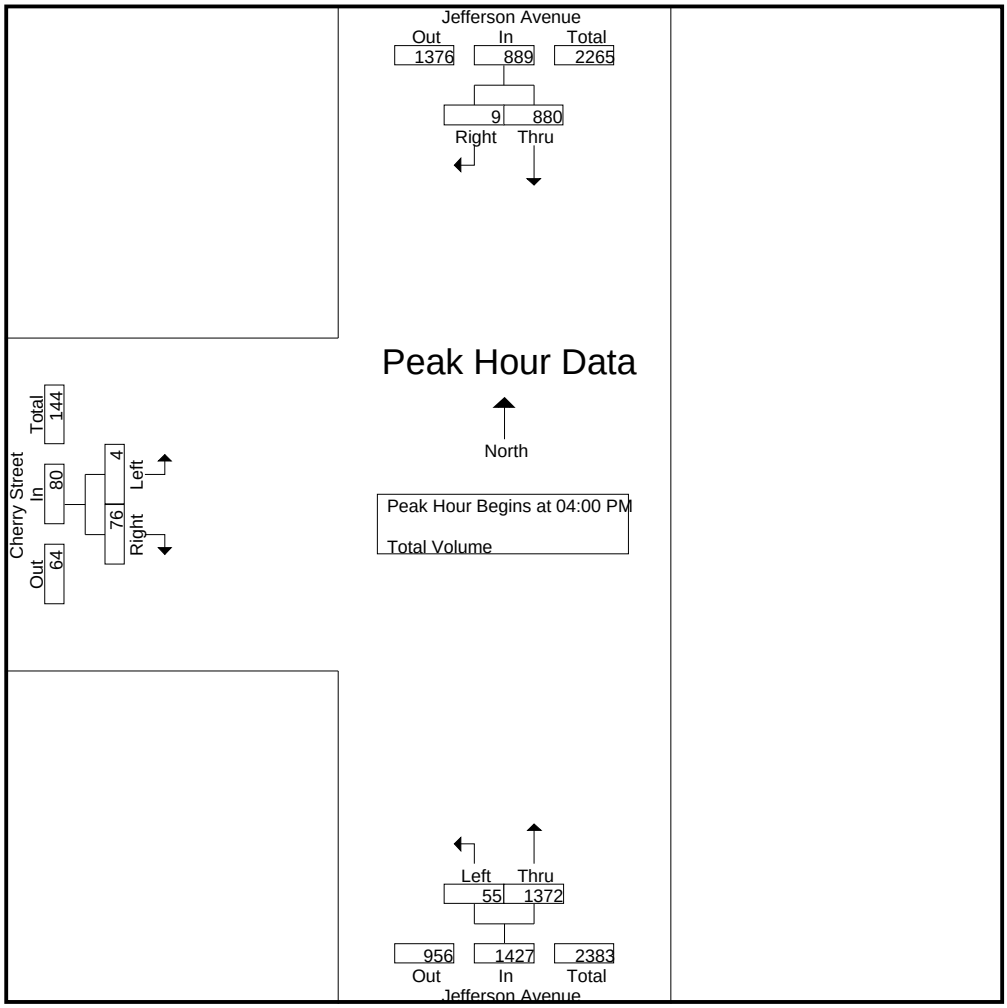

Peak Hour Analysis From 04:00 PM to 05:45 PM - Peak 1 of 1

Peak Hour for Each Approach Begins at:

	04:00 PM			04:30 PM			04:00 PM		
+0 mins.	**249**	**3**	**252**	9	364	373	**2**	**26**	**28**
+15 mins.	209	2	211	9	336	345	2	13	15
+30 mins.	235	2	237	**12**	343	355	0	18	18
+45 mins.	187	2	189	8	**421**	**429**	0	19	19
Total Volume	880	9	889	38	1464	1502	4	76	80
% App. Total	99	1		2.5	97.5		5	95	
PHF	.884	.750	.882	.792	.869	.875	.500	.731	.714

Counts Unlimited Inc.
25286 Jaclyn Avenue
Moreno Valley, CA 92557
951-485-7934

City of Murrieta
N/S: Jackson Avenue
E/W: Murrieta Hot Springs Road
Weather: Sunny

File Name : MURJAMHSAM
Site Code : 9311098
Start Date : 12/8/2009
Page No : 1

Groups Printed- Total Volume

	Murrieta Hot Springs Road Westbound			Jackson Avenue Northbound			Murrieta Hot Springs Road Eastbound			
Start Time	Left	Thru	App. Total	Left	Right	App. Total	Thru	Right	App. Total	Int. Total
07:00 AM	6	460	466	12	8	20	173	6	179	665
07:15 AM	12	415	427	8	4	12	221	1	222	661
07:30 AM	12	317	329	10	8	18	275	5	280	627
07:45 AM	11	359	370	11	20	31	342	9	351	752
Total	41	1551	1592	41	40	81	1011	21	1032	2705
08:00 AM	16	322	338	23	9	32	279	3	282	652
08:15 AM	18	381	399	17	11	28	269	9	278	705
08:30 AM	24	377	401	15	12	27	327	3	330	758
08:45 AM	34	396	430	15	14	29	268	9	277	736
Total	92	1476	1568	70	46	116	1143	24	1167	2851
Grand Total	133	3027	3160	111	86	197	2154	45	2199	5556
Apprch %	4.2	95.8		56.3	43.7		98	2		
Total %	2.4	54.5	56.9	2	1.5	3.5	38.8	0.8	39.6	

	Murrieta Hot Springs Road Westbound			Jackson Avenue Northbound			Murrieta Hot Springs Road Eastbound			
Start Time	Left	Thru	App. Total	Left	Right	App. Total	Thru	Right	App. Total	Int. Total
Peak Hour Analysis From 07:00 AM to 08:45 AM - Peak 1 of 1										
Peak Hour for Entire Intersection Begins at 07:45 AM										
07:45 AM	11	359	370	11	**20**	31	**342**	**9**	**351**	752
08:00 AM	16	322	338	**23**	9	**32**	279	3	282	652
08:15 AM	18	**381**	399	17	11	28	269	9	278	705
08:30 AM	**24**	377	**401**	15	12	27	327	3	330	**758**
Total Volume	69	1439	1508	66	52	118	1217	24	1241	2867
% App. Total	4.6	95.4		55.9	44.1		98.1	1.9		
PHF	.719	.944	.940	.717	.650	.922	.890	.667	.884	.946

Counts Unlimited Inc.
25286 Jaclyn Avenue
Moreno Valley, CA 92557
951-485-7934

City of Murrieta
N/S: Jackson Avenue
E/W: Murrieta Hot Springs Road
Weather: Sunny

File Name : MURJAMHSAM
Site Code : 9311098
Start Date : 12/8/2009
Page No : 2

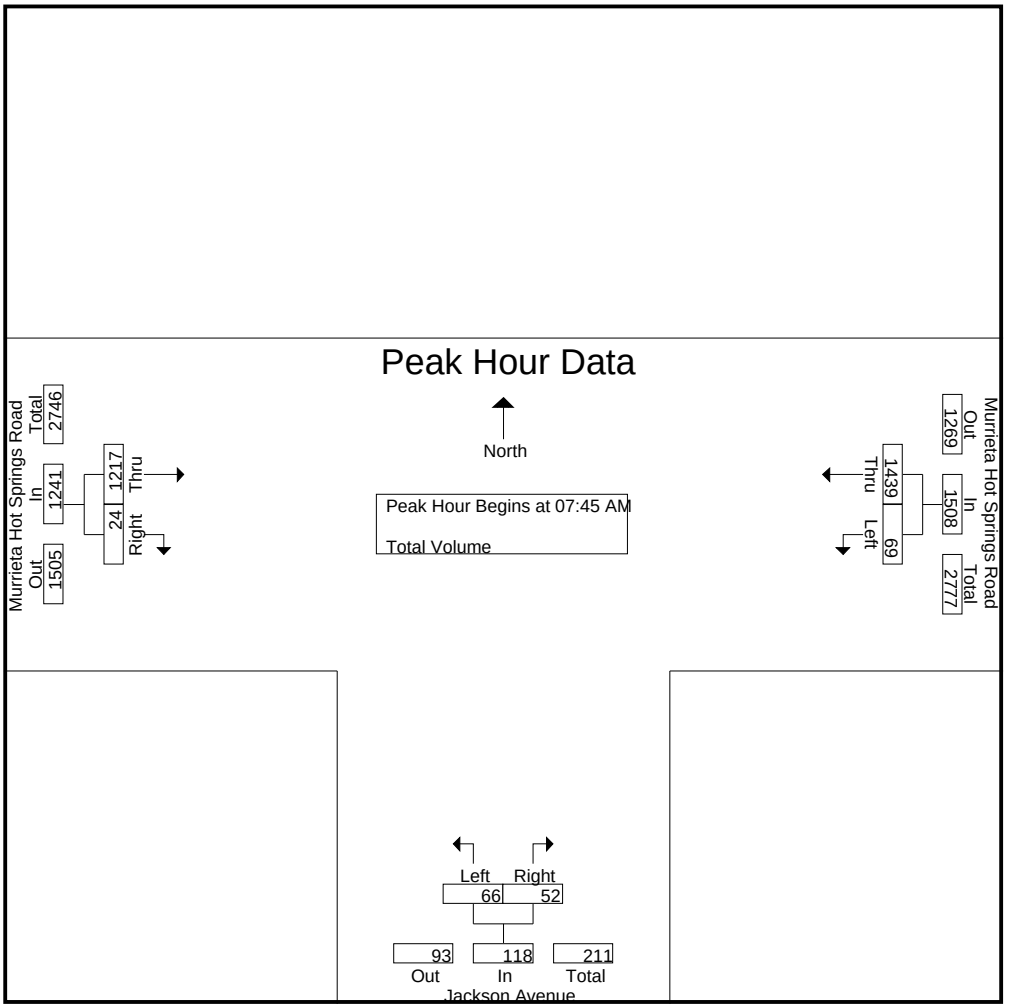

Peak Hour Analysis From 07:00 AM to 08:45 AM - Peak 1 of 1

Peak Hour for Each Approach Begins at:

	07:00 AM			07:45 AM			07:45 AM		
+0 mins.	6	**460**	**466**	11	**20**	31	**342**	**9**	**351**
+15 mins.	**12**	415	427	**23**	9	**32**	279	3	282
+30 mins.	12	317	329	17	11	28	269	9	278
+45 mins.	11	359	370	15	12	27	327	3	330
Total Volume	41	1551	1592	66	52	118	1217	24	1241
% App. Total	2.6	97.4		55.9	44.1		98.1	1.9	
PHF	.854	.843	.854	.717	.650	.922	.890	.667	.884

Counts Unlimited Inc.
25286 Jaclyn Avenue
Moreno Valley, CA 92557
951-485-7934

City of Murrieta
N/S: Jackson Avenue
E/W: Murrieta Hot Springs Road
Weather: Sunny

File Name : MURJAMHSPM
Site Code : 9311098
Start Date : 12/8/2009
Page No : 1

Groups Printed- Total Volume

	Murrieta Hot Springs Road Westbound			Jackson Avenue Northbound			Murrieta Hot Springs Road Eastbound			
Start Time	Left	Thru	App. Total	Left	Right	App. Total	Thru	Right	App. Total	Int. Total
04:00 PM	33	432	465	14	28	42	438	8	446	953
04:15 PM	17	355	372	32	21	53	464	18	482	907
04:30 PM	28	398	426	17	26	43	474	13	487	956
04:45 PM	34	359	393	22	28	50	504	9	513	956
Total	112	1544	1656	85	103	188	1880	48	1928	3772
05:00 PM	36	428	464	28	26	54	474	13	487	1005
05:15 PM	38	392	430	23	31	54	516	8	524	1008
05:30 PM	21	394	415	21	15	36	439	14	453	904
05:45 PM	25	349	374	16	28	44	445	10	455	873
Total	120	1563	1683	88	100	188	1874	45	1919	3790
Grand Total	232	3107	3339	173	203	376	3754	93	3847	7562
Apprch %	6.9	93.1		46	54		97.6	2.4		
Total %	3.1	41.1	44.2	2.3	2.7	5	49.6	1.2	50.9	

	Murrieta Hot Springs Road Westbound			Jackson Avenue Northbound			Murrieta Hot Springs Road Eastbound			
Start Time	Left	Thru	App. Total	Left	Right	App. Total	Thru	Right	App. Total	Int. Total
Peak Hour Analysis From 04:00 PM to 05:45 PM - Peak 1 of 1										
Peak Hour for Entire Intersection Begins at 04:30 PM										
04:30 PM	28	398	426	17	26	43	474	**13**	487	956
04:45 PM	34	359	393	22	28	50	504	9	513	956
05:00 PM	36	**428**	**464**	**28**	26	**54**	474	13	487	1005
05:15 PM	**38**	392	430	23	**31**	54	**516**	8	**524**	**1008**
Total Volume	136	1577	1713	90	111	201	1968	43	2011	3925
% App. Total	7.9	92.1		44.8	55.2		97.9	2.1		
PHF	.895	.921	.923	.804	.895	.931	.953	.827	.959	.973

Counts Unlimited Inc.
25286 Jaclyn Avenue
Moreno Valley, CA 92557
951-485-7934

City of Murrieta
N/S: Jackson Avenue
E/W: Murrieta Hot Springs Road
Weather: Sunny

File Name : MURJAMHSPM
Site Code : 9311098
Start Date : 12/8/2009
Page No : 2

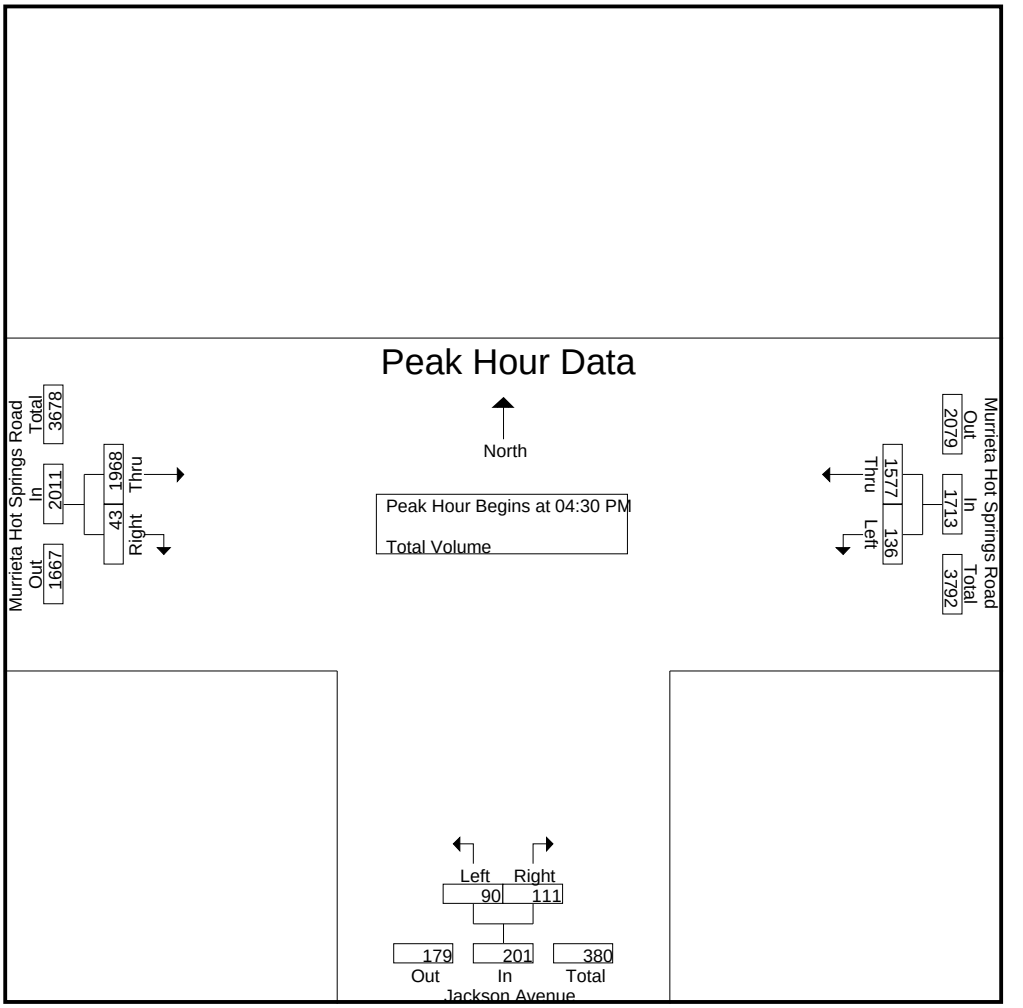

Peak Hour Analysis From 04:00 PM to 05:45 PM - Peak 1 of 1

Peak Hour for Each Approach Begins at:

	04:30 PM			04:30 PM			04:30 PM		
+0 mins.	28	398	426	17	26	43	474	**13**	487
+15 mins.	34	359	393	22	28	50	504	9	513
+30 mins.	36	**428**	**464**	**28**	26	**54**	474	13	487
+45 mins.	**38**	392	430	23	**31**	54	**516**	8	**524**
Total Volume	136	1577	1713	90	111	201	1968	43	2011
% App. Total	7.9	92.1		44.8	55.2		97.9	2.1	
PHF	.895	.921	.923	.804	.895	.931	.953	.827	.959

Counts Unlimited Inc.
25286 Jaclyn Avenue
Moreno Valley, CA 92557
951-485-7934

City of Murrieta
N/S: California Oaks Road
E/W: Clinton Keith Road
Weather: Sunny

File Name : MURCOCKAM
Site Code : 9311025
Start Date : 12/9/2009
Page No : 1

Groups Printed- Total Volume

	Clinton Keith Road Westbound			California Oaks Road Northbound			Clinton Keith Road Eastbound			
Start Time	Left	Thru	App. Total	Left	Right	App. Total	Thru	Right	App. Total	Int. Total
07:00 AM	52	132	184	13	52	65	176	14	190	439
07:15 AM	79	127	206	14	42	56	120	19	139	401
07:30 AM	92	123	215	19	57	76	166	16	182	473
07:45 AM	75	129	204	21	66	87	127	21	148	439
Total	298	511	809	67	217	284	589	70	659	1752
08:00 AM	70	111	181	15	67	82	140	25	165	428
08:15 AM	143	146	289	24	87	111	126	34	160	560
08:30 AM	119	146	265	33	102	135	108	36	144	544
08:45 AM	105	105	210	39	83	122	119	18	137	469
Total	437	508	945	111	339	450	493	113	606	2001
Grand Total	735	1019	1754	178	556	734	1082	183	1265	3753
Apprch %	41.9	58.1		24.3	75.7		85.5	14.5		
Total %	19.6	27.2	46.7	4.7	14.8	19.6	28.8	4.9	33.7	

	Clinton Keith Road Westbound			California Oaks Road Northbound			Clinton Keith Road Eastbound			
Start Time	Left	Thru	App. Total	Left	Right	App. Total	Thru	Right	App. Total	Int. Total
Peak Hour Analysis From 07:00 AM to 08:45 AM - Peak 1 of 1										
Peak Hour for Entire Intersection Begins at 08:00 AM										
08:00 AM	70	111	181	15	67	82	**140**	25	**165**	428
08:15 AM	**143**	**146**	**289**	24	87	111	126	34	160	**560**
08:30 AM	119	146	265	33	**102**	**135**	108	**36**	144	544
08:45 AM	105	105	210	**39**	83	122	119	18	137	469
Total Volume	437	508	945	111	339	450	493	113	606	2001
% App. Total	46.2	53.8		24.7	75.3		81.4	18.6		
PHF	.764	.870	.817	.712	.831	.833	.880	.785	.918	.893

Counts Unlimited Inc.
25286 Jaclyn Avenue
Moreno Valley, CA 92557
951-485-7934

City of Murrieta
N/S: California Oaks Road
E/W: Clinton Keith Road
Weather: Sunny

File Name : MURCOCKAM
Site Code : 9311025
Start Date : 12/9/2009
Page No : 2

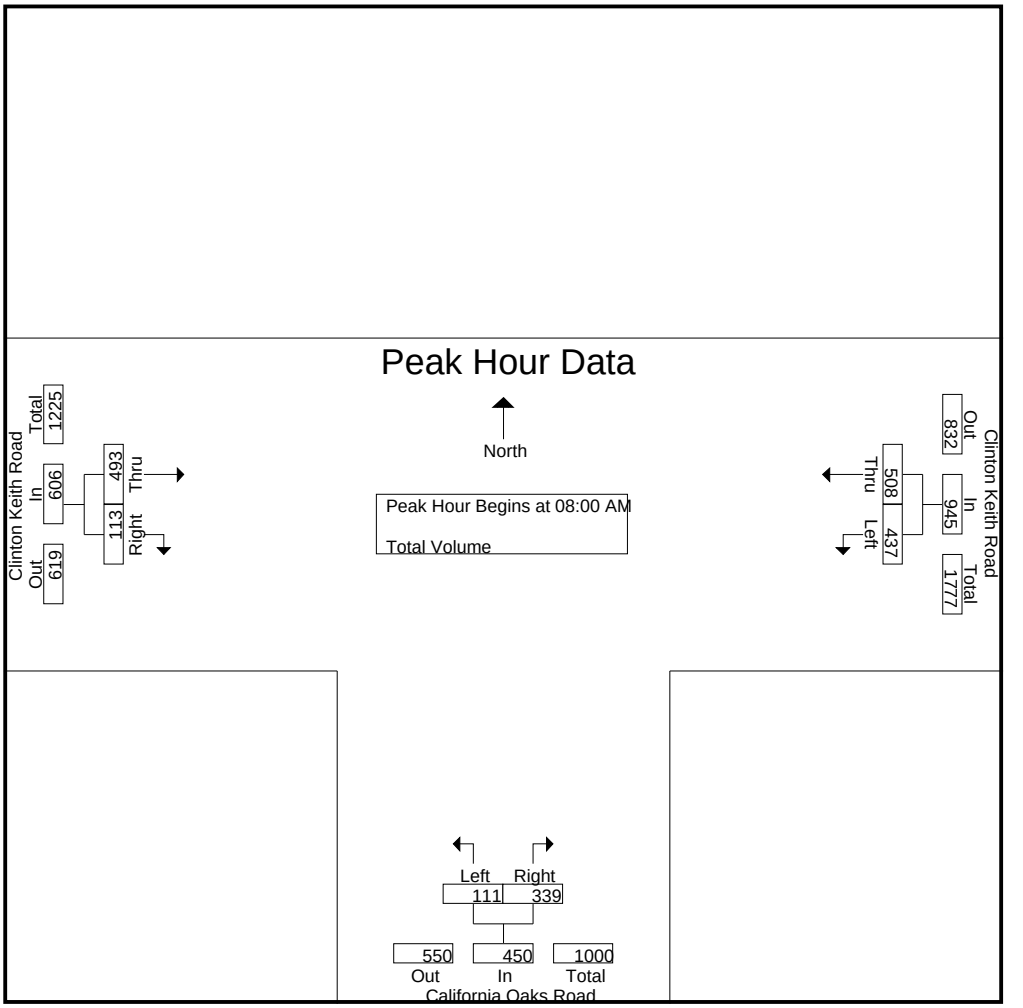

Peak Hour Analysis From 07:00 AM to 08:45 AM - Peak 1 of 1

Peak Hour for Each Approach Begins at:

	08:00 AM			08:00 AM			07:00 AM		
+0 mins.	70	111	181	15	67	82	**176**	14	**190**
+15 mins.	**143**	**146**	**289**	24	87	111	120	19	139
+30 mins.	119	146	265	33	**102**	**135**	166	16	182
+45 mins.	105	105	210	**39**	83	122	127	**21**	148
Total Volume	437	508	945	111	339	450	589	70	659
% App. Total	46.2	53.8		24.7	75.3		89.4	10.6	
PHF	.764	.870	.817	.712	.831	.833	.837	.833	.867

Counts Unlimited Inc.
25286 Jaclyn Avenue
Moreno Valley, CA 92557
951-485-7934

City of Murrieta
N/S: California Oaks Road
E/W: Clinton Keith Road
Weather: Sunny

File Name : MURCOCKPM
Site Code : 9311025
Start Date : 12/9/2009
Page No : 1

Groups Printed- Total Volume

	Clinton Keith Road Westbound			California Oaks Road Northbound			Clinton Keith Road Eastbound			
Start Time	Left	Thru	App. Total	Left	Right	App. Total	Thru	Right	App. Total	Int. Total
04:00 PM	90	148	238	31	115	146	119	25	144	528
04:15 PM	66	152	218	34	103	137	140	29	169	524
04:30 PM	83	155	238	39	121	160	160	21	181	579
04:45 PM	62	124	186	48	133	181	152	22	174	541
Total	301	579	880	152	472	624	571	97	668	2172
05:00 PM	85	157	242	38	148	186	151	26	177	605
05:15 PM	82	172	254	37	152	189	139	20	159	602
05:30 PM	90	136	226	39	142	181	155	16	171	578
05:45 PM	62	141	203	39	138	177	132	29	161	541
Total	319	606	925	153	580	733	577	91	668	2326
Grand Total	620	1185	1805	305	1052	1357	1148	188	1336	4498
Apprch %	34.3	65.7		22.5	77.5		85.9	14.1		
Total %	13.8	26.3	40.1	6.8	23.4	30.2	25.5	4.2	29.7	

	Clinton Keith Road Westbound			California Oaks Road Northbound			Clinton Keith Road Eastbound			
Start Time	Left	Thru	App. Total	Left	Right	App. Total	Thru	Right	App. Total	Int. Total
Peak Hour Analysis From 04:00 PM to 05:45 PM - Peak 1 of 1										
Peak Hour for Entire Intersection Begins at 04:30 PM										
04:30 PM	83	155	238	39	121	160	**160**	21	**181**	579
04:45 PM	62	124	186	**48**	133	181	152	22	174	541
05:00 PM	**85**	157	242	38	148	186	151	**26**	177	**605**
05:15 PM	82	**172**	**254**	37	**152**	**189**	139	20	159	602
Total Volume	312	608	920	162	554	716	602	89	691	2327
% App. Total	33.9	66.1		22.6	77.4		87.1	12.9		
PHF	.918	.884	.906	.844	.911	.947	.941	.856	.954	.962

Counts Unlimited Inc.
25286 Jaclyn Avenue
Moreno Valley, CA 92557
951-485-7934

City of Murrieta
N/S: California Oaks Road
E/W: Clinton Keith Road
Weather: Sunny

File Name : MURCOCKPM
Site Code : 9311025
Start Date : 12/9/2009
Page No : 2

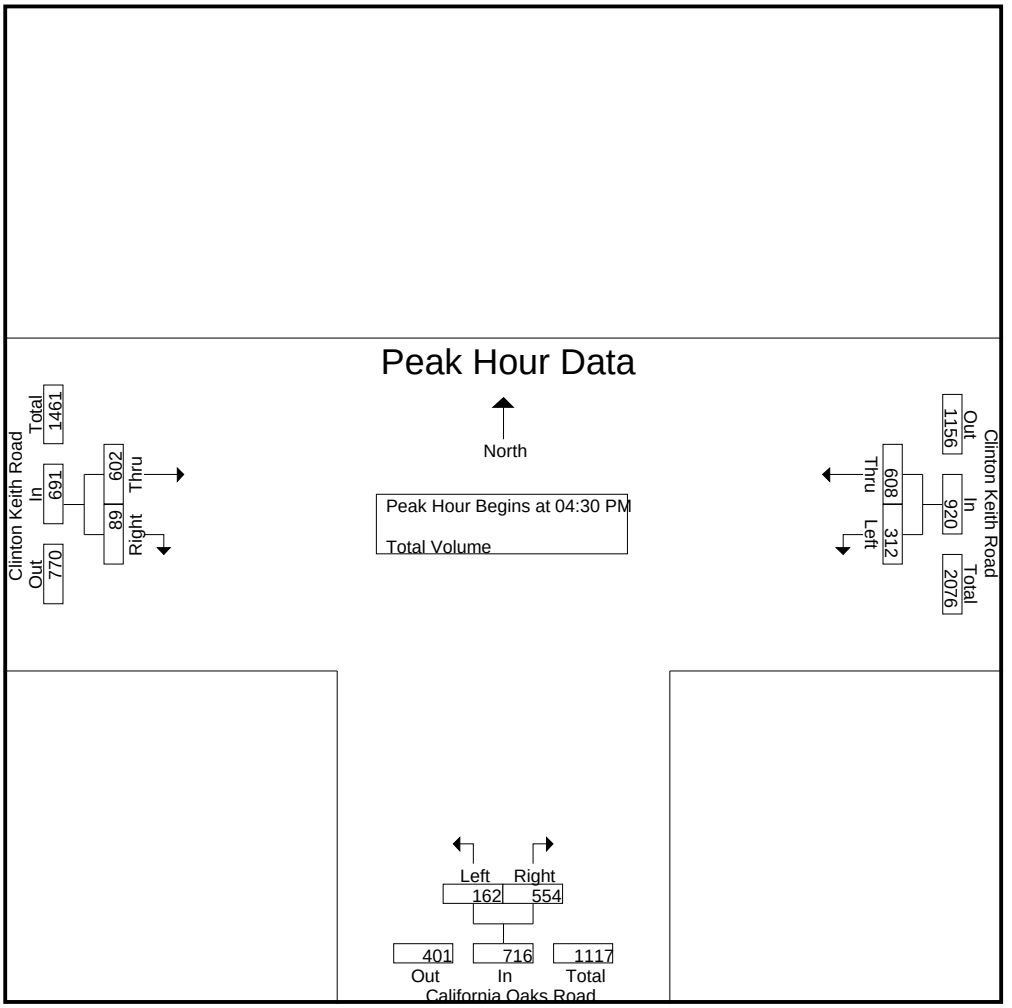

Peak Hour Analysis From 04:00 PM to 05:45 PM - Peak 1 of 1

Peak Hour for Each Approach Begins at:

	05:00 PM			04:45 PM			04:15 PM		
+0 mins.	85	157	242	**48**	133	181	140	**29**	169
+15 mins.	82	**172**	**254**	38	148	186	**160**	21	**181**
+30 mins.	**90**	136	226	37	**152**	**189**	152	22	174
+45 mins.	62	141	203	39	142	181	151	26	177
Total Volume	319	606	925	162	575	737	603	98	701
% App. Total	34.5	65.5		22	78		86	14	
PHF	.886	.881	.910	.844	.946	.975	.942	.845	.968

Counts Unlimited Inc.
25286 Jaclyn Avenue
Moreno Valley, CA 92557
951-485-7934

City of Murieta
N/S: Antelope Road
E/W: Keller Road
Weather: Sunny

File Name : MURANKEAM
Site Code : 9311099
Start Date : 12/9/2009
Page No : 1

Groups Printed- Total Volume

	Antelope Road Southbound				Keller Road Westbound				Antelope Road Northbound				Keller Road Eastbound				
Start Time	Left	Thru	Right	App. Total	Left	Thru	Right	App. Total	Left	Thru	Right	App. Total	Left	Thru	Right	App. Total	Int. Total
07:00 AM	4	23	4	31	69	4	8	81	3	17	18	38	3	1	0	4	154
07:15 AM	3	21	1	25	69	9	6	84	0	31	37	68	5	1	4	10	187
07:30 AM	2	33	1	36	80	2	11	93	2	32	37	71	0	0	2	2	202
07:45 AM	9	38	3	50	52	2	4	58	1	32	18	51	0	0	2	2	161
Total	18	115	9	142	270	17	29	316	6	112	110	228	8	2	8	18	704
08:00 AM	0	33	5	38	32	3	4	39	1	10	12	23	1	0	1	2	102
08:15 AM	0	17	0	17	40	0	2	42	3	17	8	28	3	0	2	5	92
08:30 AM	2	14	1	17	22	0	6	28	4	18	13	35	1	1	1	3	83
08:45 AM	6	29	1	36	26	1	0	27	0	12	10	22	1	1	4	6	91
Total	8	93	7	108	120	4	12	136	8	57	43	108	6	2	8	16	368
Grand Total	26	208	16	250	390	21	41	452	14	169	153	336	14	4	16	34	1072
Apprch %	10.4	83.2	6.4		86.3	4.6	9.1		4.2	50.3	45.5		41.2	11.8	47.1		
Total %	2.4	19.4	1.5	23.3	36.4	2	3.8	42.2	1.3	15.8	14.3	31.3	1.3	0.4	1.5	3.2	

	Antelope Road Southbound				Keller Road Westbound				Antelope Road Northbound				Keller Road Eastbound				
Start Time	Left	Thru	Right	App. Total	Left	Thru	Right	App. Total	Left	Thru	Right	App. Total	Left	Thru	Right	App. Total	Int. Total
Peak Hour Analysis From 07:00 AM to 08:45 AM - Peak 1 of 1																	
Peak Hour for Entire Intersection Begins at 07:00 AM																	
07:00 AM	4	23	**4**	31	69	4	8	81	**3**	17	18	38	3	**1**	0	4	154
07:15 AM	3	21	1	25	69	**9**	6	84	0	31	**37**	68	**5**	1	**4**	**10**	187
07:30 AM	2	33	1	36	**80**	2	**11**	**93**	2	**32**	37	**71**	0	0	2	2	**202**
07:45 AM	**9**	**38**	3	**50**	52	2	4	58	1	32	18	51	0	0	2	2	161
Total Volume	18	115	9	142	270	17	29	316	6	112	110	228	8	2	8	18	704
% App. Total	12.7	81	6.3		85.4	5.4	9.2		2.6	49.1	48.2		44.4	11.1	44.4		
PHF	.500	.757	.563	.710	.844	.472	.659	.849	.500	.875	.743	.803	.400	.500	.500	.450	.871

Counts Unlimited Inc.
25286 Jaclyn Avenue
Moreno Valley, CA 92557
951-485-7934

City of Murieta
N/S: Antelope Road
E/W: Keller Road
Weather: Sunny

File Name : MURANKEAM
Site Code : 9311099
Start Date : 12/9/2009
Page No : 2

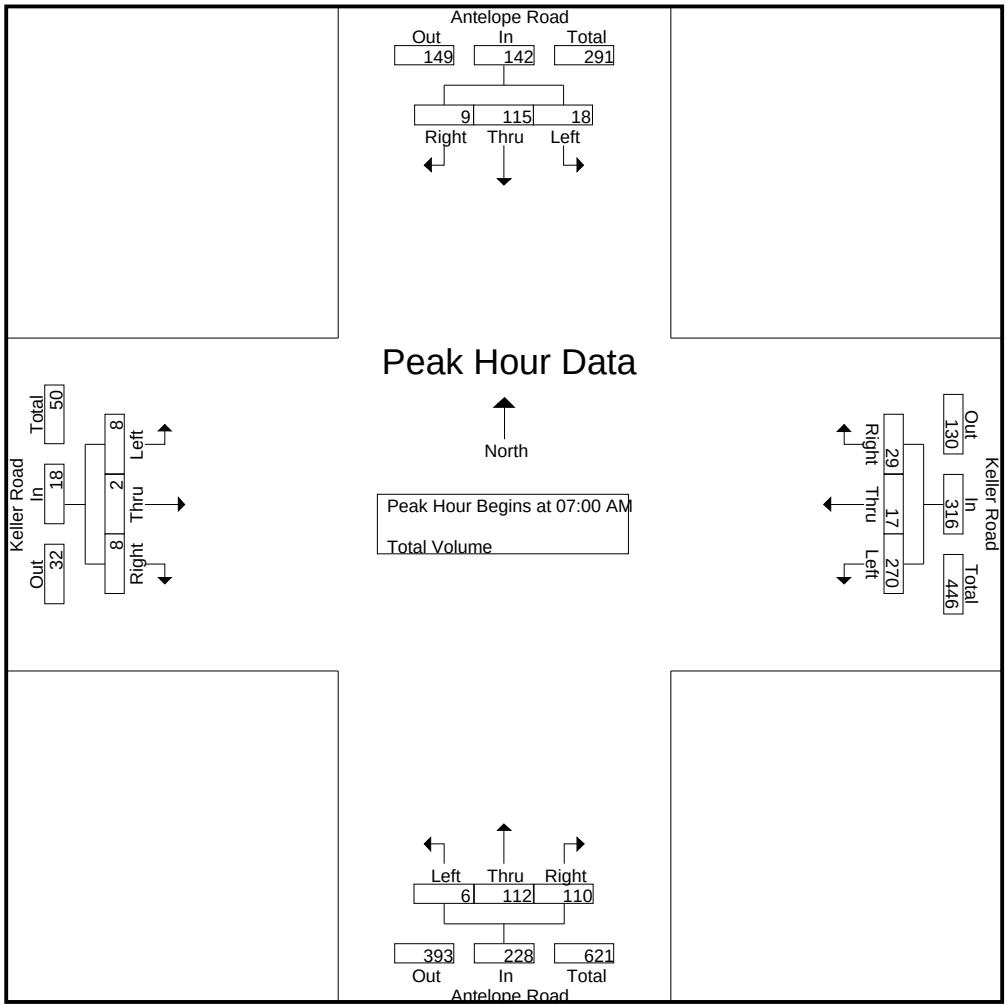

Peak Hour Analysis From 07:00 AM to 08:45 AM - Peak 1 of 1

Peak Hour for Each Approach Begins at:

	07:15 AM				07:00 AM				07:00 AM				07:00 AM			
+0 mins.	3	21	1	25	69	4	8	81	**3**	17	18	38	3	**1**	0	4
+15 mins.	2	33	1	36	69	**9**	6	84	0	31	**37**	68	**5**	1	**4**	**10**
+30 mins.	**9**	**38**	3	**50**	**80**	2	**11**	**93**	2	**32**	37	**71**	0	0	2	2
+45 mins.	0	33	**5**	38	52	2	4	58	1	32	18	51	0	0	2	2
Total Volume	14	125	10	149	270	17	29	316	6	112	110	228	8	2	8	18
% App. Total	9.4	83.9	6.7		85.4	5.4	9.2		2.6	49.1	48.2		44.4	11.1	44.4	
PHF	.389	.822	.500	.745	.844	.472	.659	.849	.500	.875	.743	.803	.400	.500	.500	.450

Counts Unlimited Inc.
25286 Jaclyn Avenue
Moreno Valley, CA 92557
951-485-7934

City of Murieta
N/S: Antelope Road
E/W: Keller Road
Weather: Sunny

File Name : MURANKEPM
Site Code : 9311099
Start Date : 12/9/2009
Page No : 1

Groups Printed- Total Volume

	Antelope Road Southbound				Keller Road Westbound				Antelope Road Northbound				Keller Road Eastbound				
Start Time	Left	Thru	Right	App. Total	Left	Thru	Right	App. Total	Left	Thru	Right	App. Total	Left	Thru	Right	App. Total	Int. Total
04:00 PM	2	19	2	23	24	2	5	31	4	55	55	114	1	0	0	1	169
04:15 PM	5	20	3	28	26	0	4	30	5	54	45	104	1	1	1	3	165
04:30 PM	10	30	2	42	13	1	4	18	2	47	55	104	2	1	1	4	168
04:45 PM	7	26	2	35	23	0	2	25	1	61	67	129	5	3	2	10	199
Total	24	95	9	128	86	3	15	104	12	217	222	451	9	5	4	18	701
05:00 PM	4	32	4	40	23	1	5	29	4	68	69	141	4	0	5	9	219
05:15 PM	6	30	1	37	26	1	3	30	3	74	64	141	4	4	1	9	217
05:30 PM	4	14	2	20	11	0	5	16	1	83	67	151	1	0	1	2	189
05:45 PM	5	17	0	22	12	0	6	18	6	90	71	167	1	1	0	2	209
Total	19	93	7	119	72	2	19	93	14	315	271	600	10	5	7	22	834
Grand Total	43	188	16	247	158	5	34	197	26	532	493	1051	19	10	11	40	1535
Apprch %	17.4	76.1	6.5		80.2	2.5	17.3		2.5	50.6	46.9		47.5	25	27.5		
Total %	2.8	12.2	1	16.1	10.3	0.3	2.2	12.8	1.7	34.7	32.1	68.5	1.2	0.7	0.7	2.6	

	Antelope Road Southbound				Keller Road Westbound				Antelope Road Northbound				Keller Road Eastbound				
Start Time	Left	Thru	Right	App. Total	Left	Thru	Right	App. Total	Left	Thru	Right	App. Total	Left	Thru	Right	App. Total	Int. Total
Peak Hour Analysis From 04:00 PM to 05:45 PM - Peak 1 of 1																	
Peak Hour for Entire Intersection Begins at 05:00 PM																	
05:00 PM	4	**32**	**4**	**40**	23	**1**	5	29	4	68	69	141	**4**	0	**5**	**9**	**219**
05:15 PM	**6**	30	1	37	**26**	1	3	**30**	3	74	64	141	4	**4**	1	9	217
05:30 PM	4	14	2	20	11	0	5	16	1	83	67	151	1	0	1	2	189
05:45 PM	5	17	0	22	12	0	**6**	18	**6**	**90**	**71**	**167**	1	1	0	2	209
Total Volume	19	93	7	119	72	2	19	93	14	315	271	600	10	5	7	22	834
% App. Total	16	78.2	5.9		77.4	2.2	20.4		2.3	52.5	45.2		45.5	22.7	31.8		
PHF	.792	.727	.438	.744	.692	.500	.792	.775	.583	.875	.954	.898	.625	.313	.350	.611	.952

Counts Unlimited Inc.
25286 Jaclyn Avenue
Moreno Valley, CA 92557
951-485-7934

City of Murieta
N/S: Antelope Road
E/W: Keller Road
Weather: Sunny

File Name : MURANKEPM
Site Code : 9311099
Start Date : 12/9/2009
Page No : 2

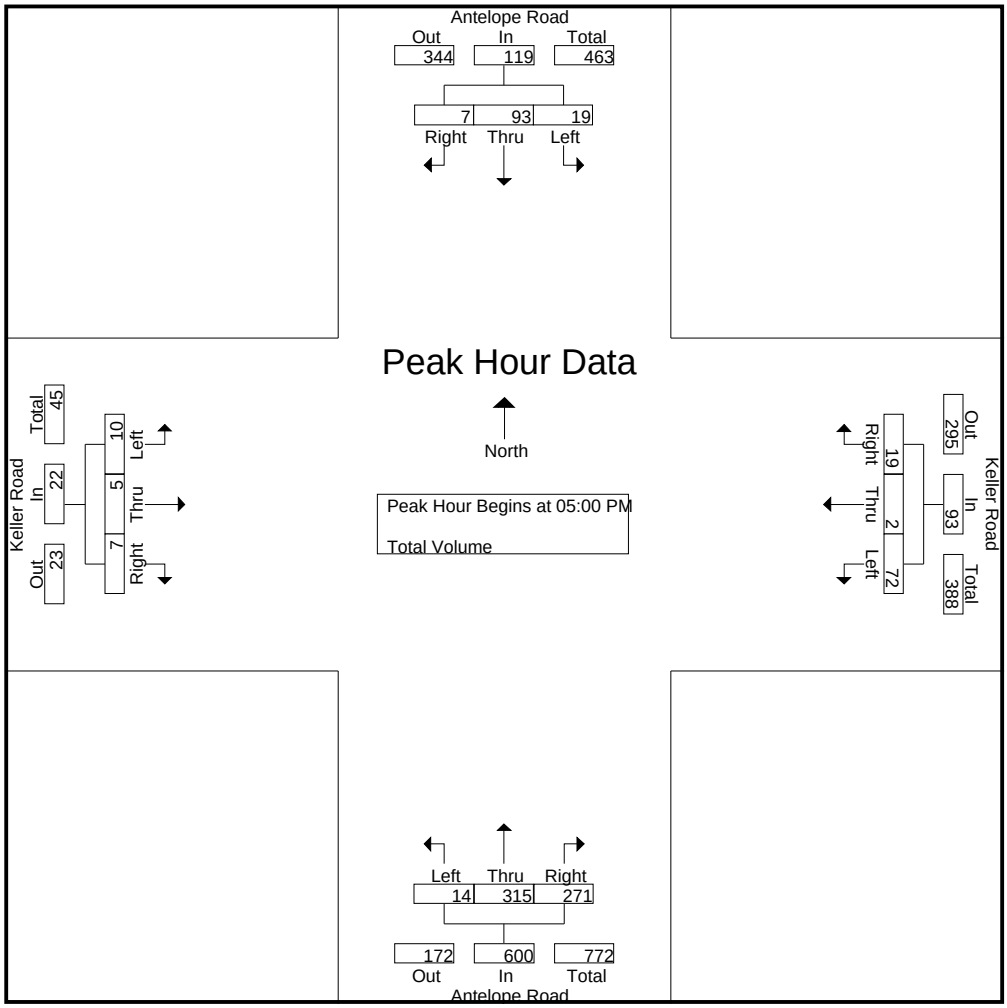

Peak Hour Analysis From 04:00 PM to 05:45 PM - Peak 1 of 1

Peak Hour for Each Approach Begins at:

	04:30 PM				04:00 PM				05:00 PM				04:30 PM			
+0 mins.	**10**	30	2	**42**	24	**2**	**5**	**31**	4	68	69	141	2	1	1	4
+15 mins.	7	26	2	35	**26**	0	4	30	3	74	64	141	**5**	3	2	**10**
+30 mins.	4	**32**	**4**	40	13	1	4	18	1	83	67	151	4	0	**5**	9
+45 mins.	6	30	1	37	23	0	2	25	**6**	**90**	**71**	**167**	4	**4**	1	9
Total Volume	27	118	9	154	86	3	15	104	14	315	271	600	15	8	9	32
% App. Total	17.5	76.6	5.8		82.7	2.9	14.4		2.3	52.5	45.2		46.9	25	28.1	
PHF	.675	.922	.563	.917	.827	.375	.750	.839	.583	.875	.954	.898	.750	.500	.450	.800

Counts Unlimited Inc.
25286 Jaclyn Avenue
Moreno Valley, CA 92557
951-485-7934

City of Murrieta
N/S: I-215 Southbound Ramps
E/W: Murrieta Hot Springs Road
Weather: Sunny

File Name : MUR215SMHSAM
Site Code : 9311066
Start Date : 12/8/2009
Page No : 1

Groups Printed- Total Volume

	I-215 Southbound On-Off Ramps Southbound				Murrieta Hot Springs Road Westbound				I-215 Southbound On Ramp Northbound				Murrieta Hot Springs Road Eastbound				
Start Time	Left	Thru	Right	App. Total	Left	Thru	Right	App. Total	Left	Thru	Right	App. Total	Left	Thru	Right	App. Total	Int. Total
07:00 AM	87	0	69	156	0	244	94	338	0	0	0	0	0	146	9	155	649
07:15 AM	106	0	74	180	0	319	110	429	0	0	0	0	0	183	15	198	807
07:30 AM	121	0	99	220	0	294	95	389	0	0	0	0	0	254	15	269	878
07:45 AM	137	0	125	262	0	333	92	425	0	0	0	0	0	309	15	324	1011
Total	451	0	367	818	0	1190	391	1581	0	0	0	0	0	892	54	946	3345
08:00 AM	124	0	86	210	0	313	103	416	0	0	0	0	0	231	14	245	871
08:15 AM	108	0	86	194	0	357	97	454	0	0	0	0	0	270	10	280	928
08:30 AM	157	0	123	280	0	340	86	426	0	0	0	0	0	295	14	309	1015
08:45 AM	122	0	111	233	0	402	62	464	0	0	0	0	0	283	17	300	997
Total	511	0	406	917	0	1412	348	1760	0	0	0	0	0	1079	55	1134	3811
Grand Total	962	0	773	1735	0	2602	739	3341	0	0	0	0	0	1971	109	2080	7156
Apprch %	55.4	0	44.6		0	77.9	22.1		0	0	0		0	94.8	5.2		
Total %	13.4	0	10.8	24.2	0	36.4	10.3	46.7	0	0	0	0	0	27.5	1.5	29.1	

	I-215 Southbound On-Off Ramps Southbound				Murrieta Hot Springs Road Westbound				I-215 Southbound On Ramp Northbound				Murrieta Hot Springs Road Eastbound				
Start Time	Left	Thru	Right	App. Total	Left	Thru	Right	App. Total	Left	Thru	Right	App. Total	Left	Thru	Right	App. Total	Int. Total
Peak Hour Analysis From 07:00 AM to 08:45 AM - Peak 1 of 1																	
Peak Hour for Entire Intersection Begins at 07:45 AM																	
07:45 AM	137	0	**125**	262	0	333	92	425	0	0	0	0	0	**309**	**15**	**324**	1011
08:00 AM	124	0	86	210	0	313	**103**	416	0	0	0	0	0	231	14	245	871
08:15 AM	108	0	86	194	0	**357**	97	**454**	0	0	0	0	0	270	10	280	928
08:30 AM	**157**	0	123	**280**	0	340	86	426	0	0	0	0	0	295	14	309	**1015**
Total Volume	526	0	420	946	0	1343	378	1721	0	0	0	0	0	1105	53	1158	3825
% App. Total	55.6	0	44.4		0	78	22		0	0	0		0	95.4	4.6		
PHF	.838	.000	.840	.845	.000	.940	.917	.948	.000	.000	.000	.000	.000	.894	.883	.894	.942

Counts Unlimited Inc.
25286 Jaclyn Avenue
Moreno Valley, CA 92557
951-485-7934

City of Murrieta
N/S: I-215 Southbound Ramps
E/W: Murrieta Hot Springs Road
Weather: Sunny

File Name : MUR215SMHSAM
Site Code : 9311066
Start Date : 12/8/2009
Page No : 2

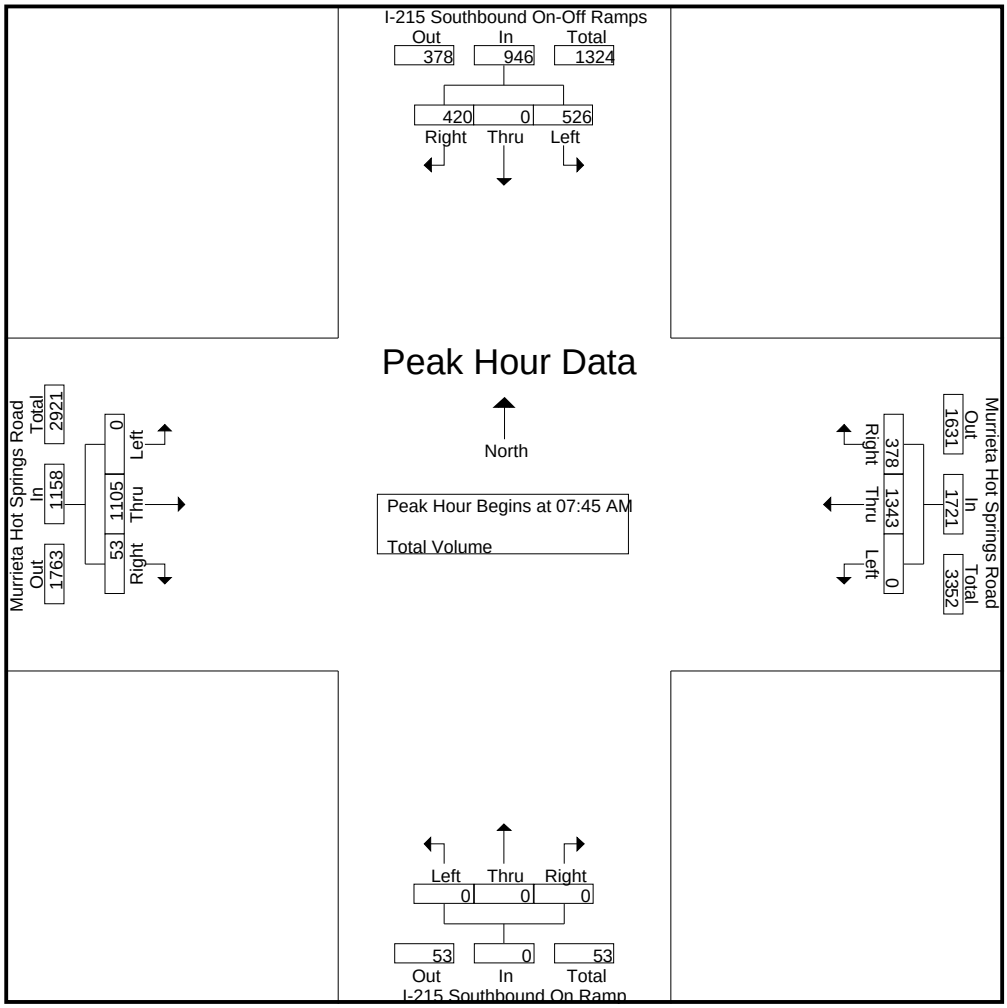

Peak Hour Analysis From 07:00 AM to 08:45 AM - Peak 1 of 1

Peak Hour for Each Approach Begins at:

	07:45 AM				08:00 AM				07:00 AM				07:45 AM			
+0 mins.	137	0	**125**	262	0	313	**103**	416	0	0	0	0	0	**309**	**15**	**324**
+15 mins.	124	0	86	210	0	357	97	454	0	0	0	0	0	231	14	245
+30 mins.	108	0	86	194	0	340	86	426	0	0	0	0	0	270	10	280
+45 mins.	**157**	0	123	**280**	0	**402**	62	**464**	0	0	0	0	0	295	14	309
Total Volume	526	0	420	946	0	1412	348	1760	0	0	0	0	0	1105	53	1158
% App. Total	55.6	0	44.4		0	80.2	19.8		0	0	0		0	95.4	4.6	
PHF	.838	.000	.840	.845	.000	.878	.845	.948	.000	.000	.000	.000	.000	.894	.883	.894

Counts Unlimited Inc.
25286 Jaclyn Avenue
Moreno Valley, CA 92557
951-485-7934

City of Murrieta
N/S: I-215 Southbound Ramps
E/W: Murrieta Hot Springs Road
Weather: Sunny

File Name : MUR215SMHSPM
Site Code : 9311066
Start Date : 12/8/2009
Page No : 1

Groups Printed- Total Volume

	I-215 Southbound On-Off Ramps Southbound				Murrieta Hot Springs Road Westbound				I-215 Southbound On Ramp Northbound				Murrieta Hot Springs Road Eastbound				
Start Time	Left	Thru	Right	App. Total	Left	Thru	Right	App. Total	Left	Thru	Right	App. Total	Left	Thru	Right	App. Total	Int. Total
04:00 PM	122	0	51	173	0	429	47	476	0	0	0	0	0	477	27	504	1153
04:15 PM	171	0	66	237	0	397	72	469	0	0	0	0	0	480	30	510	1216
04:30 PM	138	0	60	198	0	352	64	416	0	0	0	0	0	505	48	553	1167
04:45 PM	167	0	74	241	0	368	58	426	0	0	0	0	0	505	25	530	1197
Total	598	0	251	849	0	1546	241	1787	0	0	0	0	0	1967	130	2097	4733
05:00 PM	136	0	58	194	0	397	59	456	0	0	0	0	0	564	41	605	1255
05:15 PM	162	0	44	206	0	418	57	475	0	0	0	0	0	529	25	554	1235
05:30 PM	131	0	62	193	0	386	63	449	0	0	0	0	0	492	20	512	1154
05:45 PM	163	0	51	214	0	339	65	404	0	0	0	0	0	449	26	475	1093
Total	592	0	215	807	0	1540	244	1784	0	0	0	0	0	2034	112	2146	4737
Grand Total	1190	0	466	1656	0	3086	485	3571	0	0	0	0	0	4001	242	4243	9470
Apprch %	71.9	0	28.1		0	86.4	13.6		0	0	0		0	94.3	5.7		
Total %	12.6	0	4.9	17.5	0	32.6	5.1	37.7	0	0	0	0	0	42.2	2.6	44.8	

	I-215 Southbound On-Off Ramps Southbound				Murrieta Hot Springs Road Westbound				I-215 Southbound On Ramp Northbound				Murrieta Hot Springs Road Eastbound				
Start Time	Left	Thru	Right	App. Total	Left	Thru	Right	App. Total	Left	Thru	Right	App. Total	Left	Thru	Right	App. Total	Int. Total
Peak Hour Analysis From 04:00 PM to 05:45 PM - Peak 1 of 1																	
Peak Hour for Entire Intersection Begins at 04:30 PM																	
04:30 PM	138	0	60	198	0	352	**64**	416	0	0	0	0	0	505	**48**	553	1167
04:45 PM	**167**	0	**74**	**241**	0	368	58	426	0	0	0	0	0	505	25	530	1197
05:00 PM	136	0	58	194	0	397	59	456	0	0	0	0	0	**564**	41	**605**	**1255**
05:15 PM	162	0	44	206	0	**418**	57	**475**	0	0	0	0	0	529	25	554	1235
Total Volume	603	0	236	839	0	1535	238	1773	0	0	0	0	0	2103	139	2242	4854
% App. Total	71.9	0	28.1		0	86.6	13.4		0	0	0		0	93.8	6.2		
PHF	.903	.000	.797	.870	.000	.918	.930	.933	.000	.000	.000	.000	.000	.932	.724	.926	.967

Counts Unlimited Inc.
25286 Jaclyn Avenue
Moreno Valley, CA 92557
951-485-7934

City of Murrieta
N/S: I-215 Southbound Ramps
E/W: Murrieta Hot Springs Road
Weather: Sunny

File Name : MUR215SMHSPM
Site Code : 9311066
Start Date : 12/8/2009
Page No : 2

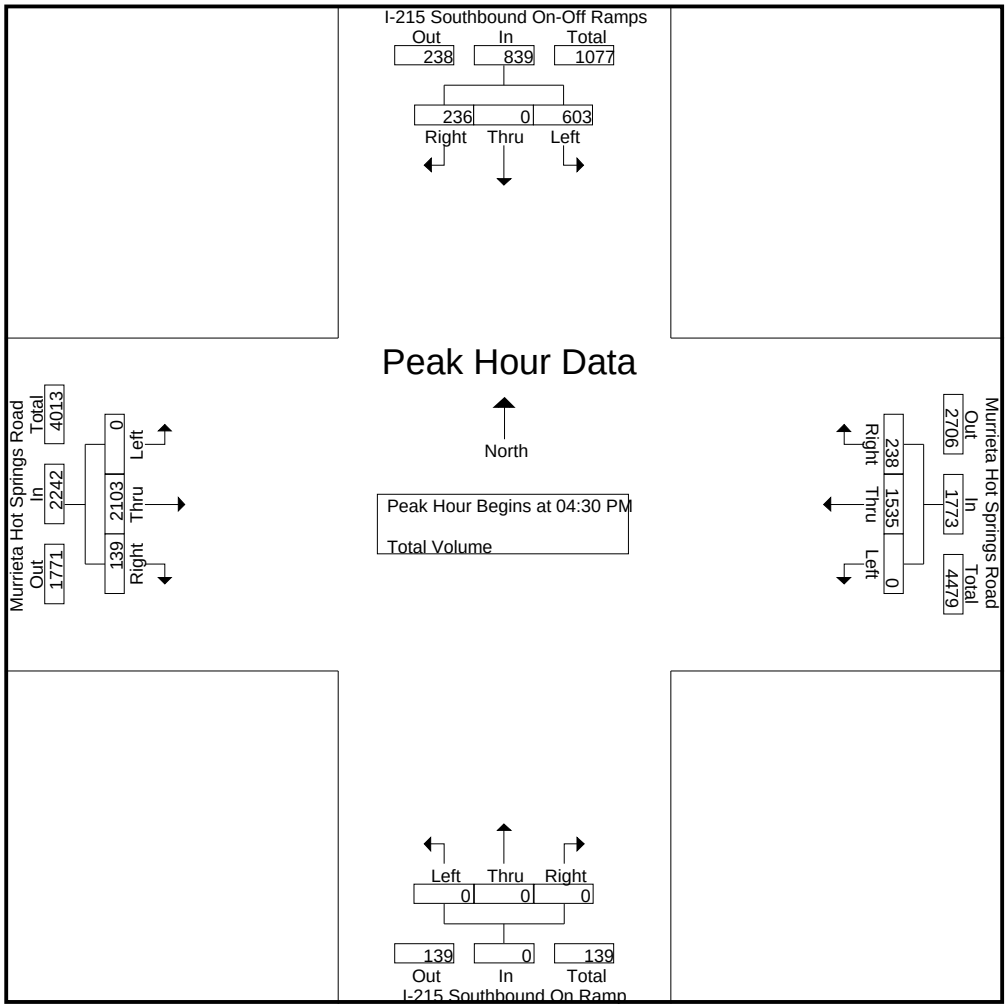

Peak Hour Analysis From 04:00 PM to 05:45 PM - Peak 1 of 1

Peak Hour for Each Approach Begins at:

	04:15 PM				04:45 PM				04:00 PM				04:30 PM			
+0 mins.	**171**	0	66	237	0	368	58	426	0	0	0	0	0	505	**48**	553
+15 mins.	138	0	60	198	0	397	59	456	0	0	0	0	0	505	25	530
+30 mins.	167	0	**74**	**241**	0	**418**	57	**475**	0	0	0	0	0	**564**	41	**605**
+45 mins.	136	0	58	194	0	386	**63**	449	0	0	0	0	0	529	25	554
Total Volume	612	0	258	870	0	1569	237	1806	0	0	0	0	0	2103	139	2242
% App. Total	70.3	0	29.7		0	86.9	13.1		0	0	0		0	93.8	6.2	
PHF	.895	.000	.872	.902	.000	.938	.940	.951	.000	.000	.000	.000	.000	.932	.724	.926

Counts Unlimited Inc.
25286 Jaclyn Avenue
Moreno Valley, CA 92557
951-485-7934

City of Murrieta
N/S: I-215 Southbound Ramps
E/W: Clinton Keith Road
Weather: Sunny

File Name : MUR215SCKAM
Site Code : 9311136
Start Date : 12/9/2009
Page No : 1

Groups Printed- Total Volume

	I-215 Southbound Off Ramp Southbound				Clinton Keith Road Westbound				I-215 Southbound On Ramp Northbound				Clinton Keith Road Eastbound				
Start Time	Left	Thru	Right	App. Total	Left	Thru	Right	App. Total	Left	Thru	Right	App. Total	Left	Thru	Right	App. Total	Int. Total
07:00 AM	46	0	84	130	46	105	0	151	0	0	0	0	0	245	102	347	628
07:15 AM	33	1	88	122	86	100	0	186	0	0	0	0	0	217	137	354	662
07:30 AM	5	0	111	116	59	102	0	161	0	0	0	0	0	170	137	307	584
07:45 AM	4	1	105	110	16	61	0	77	0	0	0	0	0	154	138	292	479
Total	88	2	388	478	207	368	0	575	0	0	0	0	0	786	514	1300	2353
08:00 AM	4	0	91	95	30	84	0	114	0	0	0	0	0	150	109	259	468
08:15 AM	7	0	128	135	19	76	0	95	0	0	0	0	1	138	153	292	522
08:30 AM	5	0	120	125	14	93	0	107	0	0	0	0	0	150	107	257	489
08:45 AM	6	2	129	137	13	62	0	75	0	0	0	0	0	159	101	260	472
Total	22	2	468	492	76	315	0	391	0	0	0	0	1	597	470	1068	1951
Grand Total	110	4	856	970	283	683	0	966	0	0	0	0	1	1383	984	2368	4304
Apprch %	11.3	0.4	88.2		29.3	70.7	0		0	0	0		0	58.4	41.6		
Total %	2.6	0.1	19.9	22.5	6.6	15.9	0	22.4	0	0	0	0	0	32.1	22.9	55	

	I-215 Southbound Off Ramp Southbound				Clinton Keith Road Westbound				I-215 Southbound On Ramp Northbound				Clinton Keith Road Eastbound				
Start Time	Left	Thru	Right	App. Total	Left	Thru	Right	App. Total	Left	Thru	Right	App. Total	Left	Thru	Right	App. Total	Int. Total
Peak Hour Analysis From 07:00 AM to 08:45 AM - Peak 1 of 1																	
Peak Hour for Entire Intersection Begins at 07:00 AM																	
07:00 AM	**46**	0	84	**130**	46	**105**	0	151	0	0	0	0	0	**245**	102	347	628
07:15 AM	33	**1**	88	122	**86**	100	0	**186**	0	0	0	0	0	217	137	**354**	**662**
07:30 AM	5	0	**111**	116	59	102	0	161	0	0	0	0	0	170	137	307	584
07:45 AM	4	1	105	110	16	61	0	77	0	0	0	0	0	154	**138**	292	479
Total Volume	88	2	388	478	207	368	0	575	0	0	0	0	0	786	514	1300	2353
% App. Total	18.4	0.4	81.2		36	64	0		0	0	0		0	60.5	39.5		
PHF	.478	.500	.874	.919	.602	.876	.000	.773	.000	.000	.000	.000	.000	.802	.931	.918	.889

Counts Unlimited Inc.
25286 Jaclyn Avenue
Moreno Valley, CA 92557
951-485-7934

City of Murrieta
N/S: I-215 Southbound Ramps
E/W: Clinton Keith Road
Weather: Sunny

File Name : MUR215SCKAM
Site Code : 9311136
Start Date : 12/9/2009
Page No : 2

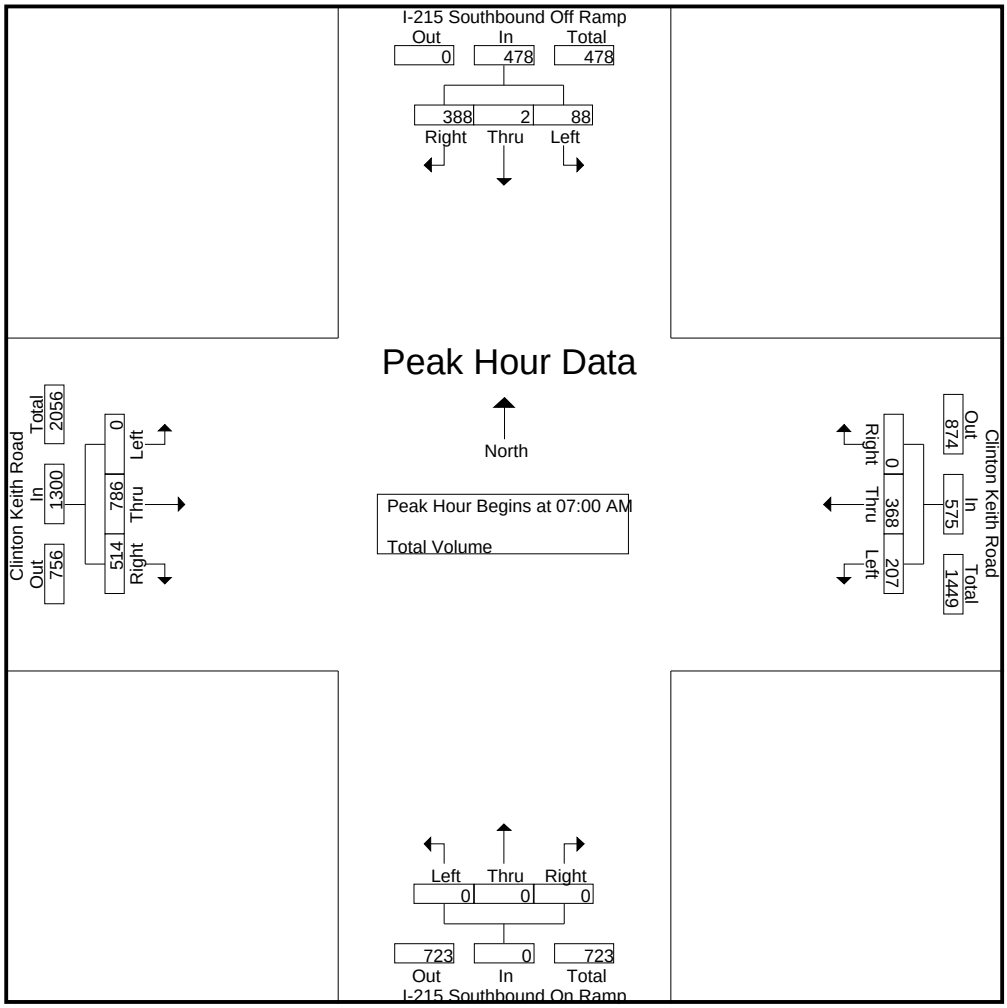

Peak Hour Analysis From 07:00 AM to 08:45 AM - Peak 1 of 1

Peak Hour for Each Approach Begins at:

	08:00 AM				07:00 AM				07:00 AM				07:00 AM			
+0 mins.	4	0	91	95	46	**105**	0	151	0	0	0	0	0	**245**	102	347
+15 mins.	**7**	0	128	135	**86**	100	0	**186**	0	0	0	0	0	217	137	**354**
+30 mins.	5	0	120	125	59	102	0	161	0	0	0	0	0	170	137	307
+45 mins.	6	**2**	**129**	**137**	16	61	0	77	0	0	0	0	0	154	**138**	292
Total Volume	22	2	468	492	207	368	0	575	0	0	0	0	0	786	514	1300
% App. Total	4.5	0.4	95.1		36	64	0		0	0	0		0	60.5	39.5	
PHF	.786	.250	.907	.898	.602	.876	.000	.773	.000	.000	.000	.000	.000	.802	.931	.918

Counts Unlimited Inc.
25286 Jaclyn Avenue
Moreno Valley, CA 92557
951-485-7934

City of Murrieta
N/S: I-215 Southbound Ramps
E/W: Clinton Keith Road
Weather: Sunny

File Name : MUR215SCKPM
Site Code : 9311136
Start Date : 12/9/2009
Page No : 1

Groups Printed- Total Volume

	I-215 Southbound Off Ramp Southbound				Clinton Keith Road Westbound				I-215 Southbound On Ramp Northbound				Clinton Keith Road Eastbound				
Start Time	Left	Thru	Right	App. Total	Left	Thru	Right	App. Total	Left	Thru	Right	App. Total	Left	Thru	Right	App. Total	Int. Total
04:00 PM	12	0	140	152	19	108	0	127	0	0	0	0	0	178	95	273	552
04:15 PM	13	0	154	167	12	112	0	124	0	0	0	0	0	162	86	248	539
04:30 PM	17	1	142	160	16	106	0	122	0	0	0	0	0	183	95	278	560
04:45 PM	13	1	120	134	15	102	0	117	0	0	0	0	0	176	97	273	524
Total	55	2	556	613	62	428	0	490	0	0	0	0	0	699	373	1072	2175
05:00 PM	9	0	168	177	26	106	0	132	0	0	0	0	0	170	92	262	571
05:15 PM	11	1	176	188	23	102	0	125	0	0	0	0	0	191	111	302	615
05:30 PM	13	0	165	178	13	95	0	108	0	0	0	0	0	173	103	276	562
05:45 PM	15	0	147	162	13	102	0	115	0	0	0	0	0	152	93	245	522
Total	48	1	656	705	75	405	0	480	0	0	0	0	0	686	399	1085	2270
Grand Total	103	3	1212	1318	137	833	0	970	0	0	0	0	0	1385	772	2157	4445
Apprch %	7.8	0.2	92		14.1	85.9	0		0	0	0		0	64.2	35.8		
Total %	2.3	0.1	27.3	29.7	3.1	18.7	0	21.8	0	0	0	0	0	31.2	17.4	48.5	

	I-215 Southbound Off Ramp Southbound				Clinton Keith Road Westbound				I-215 Southbound On Ramp Northbound				Clinton Keith Road Eastbound				
Start Time	Left	Thru	Right	App. Total	Left	Thru	Right	App. Total	Left	Thru	Right	App. Total	Left	Thru	Right	App. Total	Int. Total
Peak Hour Analysis From 04:00 PM to 05:45 PM - Peak 1 of 1																	
Peak Hour for Entire Intersection Begins at 04:45 PM																	
04:45 PM	**13**	**1**	120	134	15	102	0	117	0	0	0	0	0	176	97	273	524
05:00 PM	9	0	168	177	**26**	**106**	0	**132**	0	0	0	0	0	170	92	262	571
05:15 PM	11	1	**176**	**188**	23	102	0	125	0	0	0	0	0	**191**	**111**	**302**	**615**
05:30 PM	13	0	165	178	13	95	0	108	0	0	0	0	0	173	103	276	562
Total Volume	46	2	629	677	77	405	0	482	0	0	0	0	0	710	403	1113	2272
% App. Total	6.8	0.3	92.9		16	84	0		0	0	0		0	63.8	36.2		
PHF	.885	.500	.893	.900	.740	.955	.000	.913	.000	.000	.000	.000	.000	.929	.908	.921	.924

Counts Unlimited Inc.
25286 Jaclyn Avenue
Moreno Valley, CA 92557
951-485-7934

City of Murrieta
N/S: I-215 Southbound Ramps
E/W: Clinton Keith Road
Weather: Sunny

File Name : MUR215SCKPM
Site Code : 9311136
Start Date : 12/9/2009
Page No : 2

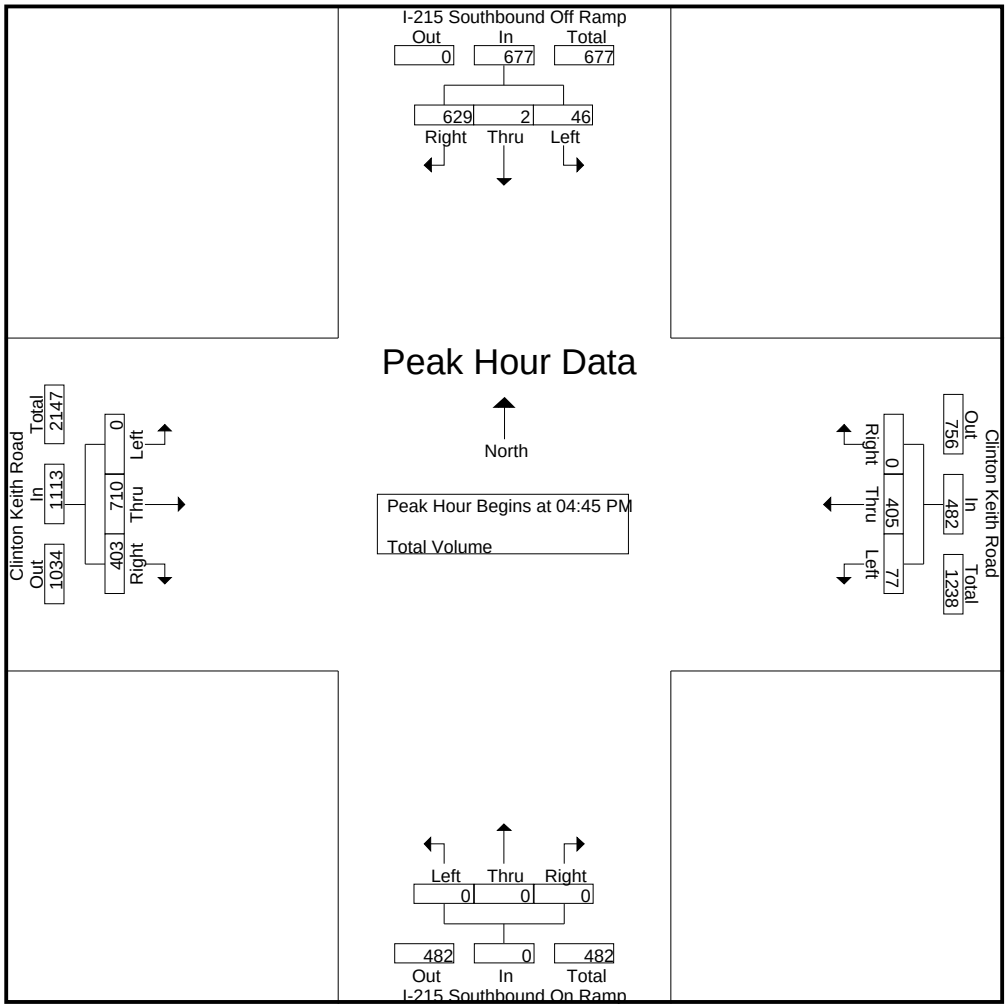

Peak Hour Analysis From 04:00 PM to 05:45 PM - Peak 1 of 1

Peak Hour for Each Approach Begins at:

	05:00 PM				04:30 PM				04:00 PM				04:30 PM			
+0 mins.	9	0	168	177	16	**106**	0	122	0	0	0	0	0	183	95	278
+15 mins.	11	**1**	**176**	**188**	15	102	0	117	0	0	0	0	0	176	97	273
+30 mins.	13	0	165	178	**26**	106	0	**132**	0	0	0	0	0	170	92	262
+45 mins.	**15**	0	147	162	23	102	0	125	0	0	0	0	0	**191**	**111**	**302**
Total Volume	48	1	656	705	80	416	0	496	0	0	0	0	0	720	395	1115
% App. Total	6.8	0.1	93		16.1	83.9	0		0	0	0		0	64.6	35.4	
PHF	.800	.250	.932	.938	.769	.981	.000	.939	.000	.000	.000	.000	.000	.942	.890	.923

Counts Unlimited Inc.
25286 Jaclyn Avenue
Moreno Valley, CA 92557
951-485-7934

City of Murrieta
N/S: I-215 Northbound Ramps
E/W: Murrieta Hot Springs Road
Weather: Sunny

File Name : MUR215NMHSAM
Site Code : 9311063
Start Date : 12/8/2009
Page No : 1

Groups Printed- Total Volume

	I-215 Northbound On-On Ramp Southbound				Murrieta Hot Springs Road Westbound				I-215 Northbound On-Off Ramps Northbound				Murrieta Hot Springs Road Eastbound				
Start Time	Left	Thru	Right	App. Total	Left	Thru	Right	App. Total	Left	Thru	Right	App. Total	Left	Thru	Right	App. Total	Int. Total
07:00 AM	0	0	0	0	0	321	279	600	13	0	18	31	0	198	30	228	859
07:15 AM	0	0	0	0	0	408	179	587	24	0	19	43	0	247	38	285	915
07:30 AM	0	0	0	0	0	352	114	466	24	0	38	62	0	324	22	346	874
07:45 AM	0	0	0	0	0	409	98	507	34	0	52	86	0	414	31	445	1038
Total	0	0	0	0	0	1490	670	2160	95	0	127	222	0	1183	121	1304	3686
08:00 AM	0	0	0	0	0	373	119	492	29	0	39	68	0	304	23	327	887
08:15 AM	0	0	0	0	0	412	145	557	60	0	33	93	0	335	36	371	1021
08:30 AM	0	0	0	0	0	397	104	501	28	0	39	67	0	391	25	416	984
08:45 AM	0	0	0	0	0	442	117	559	28	0	65	93	0	341	32	373	1025
Total	0	0	0	0	0	1624	485	2109	145	0	176	321	0	1371	116	1487	3917
Grand Total	0	0	0	0	0	3114	1155	4269	240	0	303	543	0	2554	237	2791	7603
Apprch %	0	0	0		0	72.9	27.1		44.2	0	55.8		0	91.5	8.5		
Total %	0	0	0	0	0	41	15.2	56.1	3.2	0	4	7.1	0	33.6	3.1	36.7	

	I-215 Northbound On-On Ramp Southbound				Murrieta Hot Springs Road Westbound				I-215 Northbound On-Off Ramps Northbound				Murrieta Hot Springs Road Eastbound				
Start Time	Left	Thru	Right	App. Total	Left	Thru	Right	App. Total	Left	Thru	Right	App. Total	Left	Thru	Right	App. Total	Int. Total
Peak Hour Analysis From 07:00 AM to 08:45 AM - Peak 1 of 1																	
Peak Hour for Entire Intersection Begins at 07:45 AM																	
07:45 AM	0	0	0	0	0	409	98	507	34	0	**52**	86	0	**414**	31	**445**	**1038**
08:00 AM	0	0	0	0	0	373	119	492	29	0	39	68	0	304	23	327	887
08:15 AM	0	0	0	0	0	**412**	**145**	**557**	**60**	0	33	**93**	0	335	**36**	371	1021
08:30 AM	0	0	0	0	0	397	104	501	28	0	39	67	0	391	25	416	984
Total Volume	0	0	0	0	0	1591	466	2057	151	0	163	314	0	1444	115	1559	3930
% App. Total	0	0	0		0	77.3	22.7		48.1	0	51.9		0	92.6	7.4		
PHF	.000	.000	.000	.000	.000	.965	.803	.923	.629	.000	.784	.844	.000	.872	.799	.876	.947

Counts Unlimited Inc.
25286 Jaclyn Avenue
Moreno Valley, CA 92557
951-485-7934

City of Murrieta
N/S: I-215 Northbound Ramps
E/W: Murrieta Hot Springs Road
Weather: Sunny

File Name : MUR215NMHSAM
Site Code : 9311063
Start Date : 12/8/2009
Page No : 2

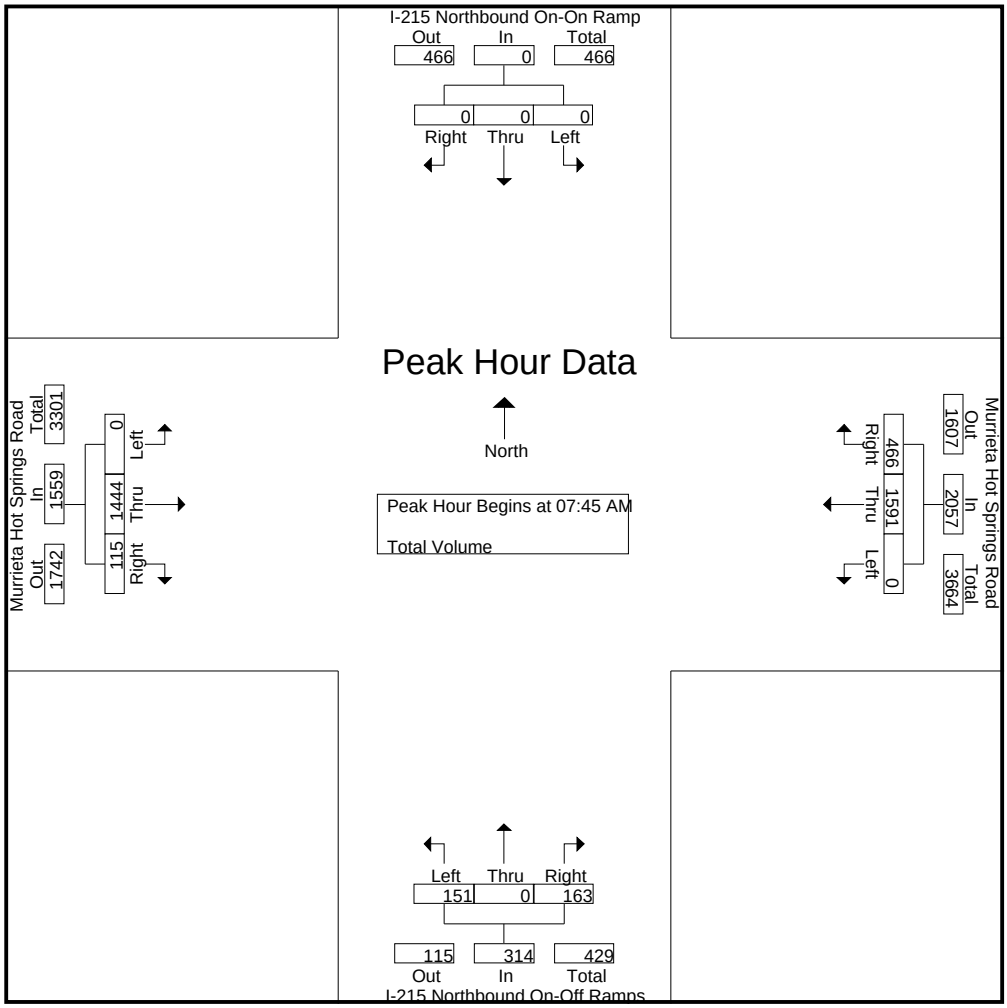

Peak Hour Analysis From 07:00 AM to 08:45 AM - Peak 1 of 1

Peak Hour for Each Approach Begins at:

	07:00 AM				07:00 AM				08:00 AM				07:45 AM			
+0 mins.	0	0	0	0	0	321	**279**	**600**	29	0	39	68	0	**414**	31	**445**
+15 mins.	0	0	0	0	0	408	179	587	**60**	0	33	**93**	0	304	23	327
+30 mins.	0	0	0	0	0	352	114	466	28	0	39	67	0	335	**36**	371
+45 mins.	0	0	0	0	0	**409**	98	507	28	0	**65**	93	0	391	25	416
Total Volume	0	0	0	0	0	1490	670	2160	145	0	176	321	0	1444	115	1559
% App. Total	0	0	0		0	69	31		45.2	0	54.8		0	92.6	7.4	
PHF	.000	.000	.000	.000	.000	.911	.600	.900	.604	.000	.677	.863	.000	.872	.799	.876

Counts Unlimited Inc.
25286 Jaclyn Avenue
Moreno Valley, CA 92557
951-485-7934

City of Murrieta
N/S: I-215 Northbound Ramps
E/W: Murrieta Hot Springs Road
Weather: Sunny

File Name : MUR215NMHSPM
Site Code : 9311063
Start Date : 12/8/2009
Page No : 1

Groups Printed- Total Volume

	I-215 Northbound On-On Ramp Southbound				Murrieta Hot Springs Road Westbound				I-215 Northbound On-Off Ramps Northbound				Murrieta Hot Springs Road Eastbound				
Start Time	Left	Thru	Right	App. Total	Left	Thru	Right	App. Total	Left	Thru	Right	App. Total	Left	Thru	Right	App. Total	Int. Total
04:00 PM	0	0	0	0	0	432	123	555	32	0	116	148	0	531	59	590	1293
04:15 PM	0	0	0	0	0	449	133	582	20	0	129	149	0	544	50	594	1325
04:30 PM	0	0	0	0	0	397	121	518	22	0	121	143	0	557	39	596	1257
04:45 PM	0	0	0	0	0	401	149	550	29	0	147	176	0	574	24	598	1324
Total	0	0	0	0	0	1679	526	2205	103	0	513	616	0	2206	172	2378	5199
05:00 PM	0	0	0	0	0	451	150	601	19	0	104	123	0	586	25	611	1335
05:15 PM	0	0	0	0	0	458	144	602	17	0	120	137	0	595	28	623	1362
05:30 PM	0	0	0	0	0	438	128	566	12	0	125	137	0	545	27	572	1275
05:45 PM	0	0	0	0	0	382	161	543	29	0	150	179	0	535	12	547	1269
Total	0	0	0	0	0	1729	583	2312	77	0	499	576	0	2261	92	2353	5241
Grand Total	0	0	0	0	0	3408	1109	4517	180	0	1012	1192	0	4467	264	4731	10440
Apprch %	0	0	0		0	75.4	24.6		15.1	0	84.9		0	94.4	5.6		
Total %	0	0	0	0	0	32.6	10.6	43.3	1.7	0	9.7	11.4	0	42.8	2.5	45.3	

	I-215 Northbound On-On Ramp Southbound				Murrieta Hot Springs Road Westbound				I-215 Northbound On-Off Ramps Northbound				Murrieta Hot Springs Road Eastbound				
Start Time	Left	Thru	Right	App. Total	Left	Thru	Right	App. Total	Left	Thru	Right	App. Total	Left	Thru	Right	App. Total	Int. Total
Peak Hour Analysis From 04:00 PM to 05:45 PM - Peak 1 of 1																	
Peak Hour for Entire Intersection Begins at 04:45 PM																	
04:45 PM	0	0	0	0	0	401	149	550	**29**	0	**147**	**176**	0	574	24	598	1324
05:00 PM	0	0	0	0	0	451	**150**	601	19	0	104	123	0	586	25	611	1335
05:15 PM	0	0	0	0	0	**458**	144	**602**	17	0	120	137	0	**595**	**28**	**623**	**1362**
05:30 PM	0	0	0	0	0	438	128	566	12	0	125	137	0	545	27	572	1275
Total Volume	0	0	0	0	0	1748	571	2319	77	0	496	573	0	2300	104	2404	5296
% App. Total	0	0	0		0	75.4	24.6		13.4	0	86.6		0	95.7	4.3		
PHF	.000	.000	.000	.000	.000	.954	.952	.963	.664	.000	.844	.814	.000	.966	.929	.965	.972

Counts Unlimited Inc.
25286 Jaclyn Avenue
Moreno Valley, CA 92557
951-485-7934

City of Murrieta
N/S: I-215 Northbound Ramps
E/W: Murrieta Hot Springs Road
Weather: Sunny

File Name : MUR215NMHSPM
Site Code : 9311063
Start Date : 12/8/2009
Page No : 2

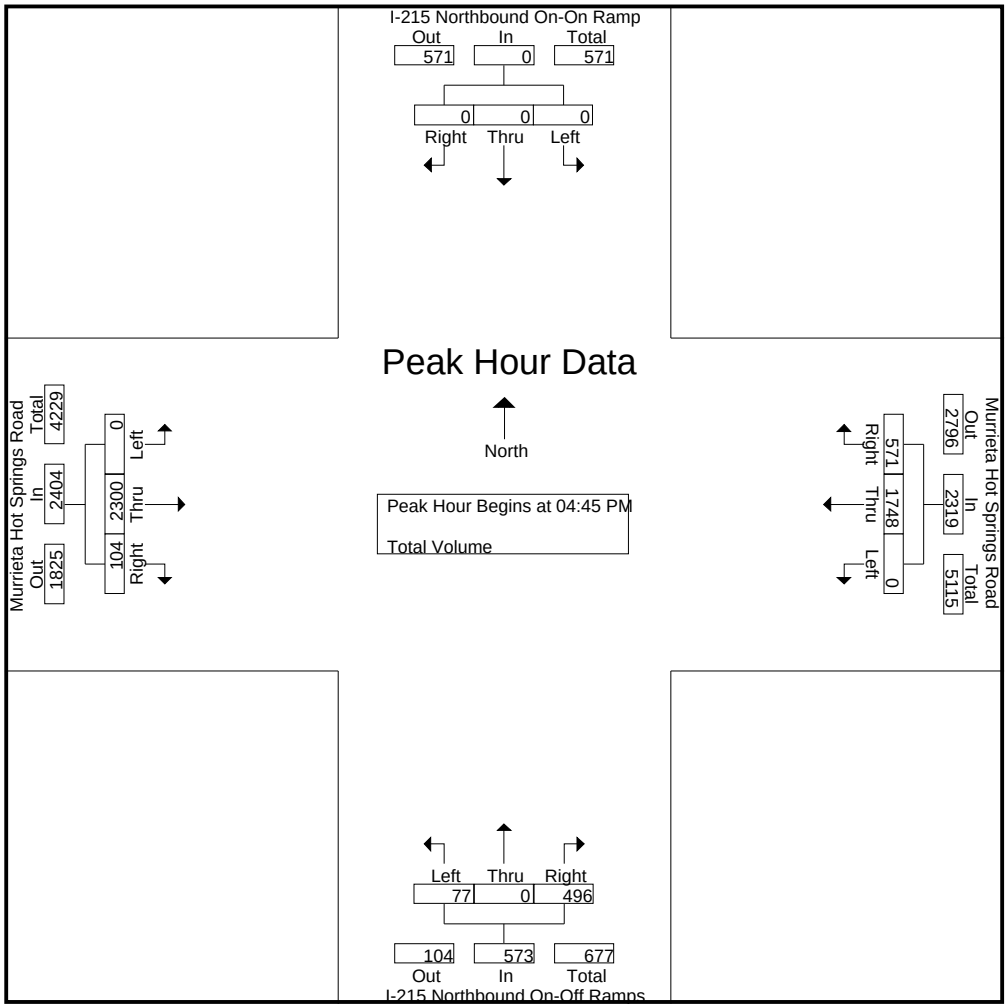

Peak Hour Analysis From 04:00 PM to 05:45 PM - Peak 1 of 1

Peak Hour for Each Approach Begins at:

	04:00 PM				04:45 PM				04:00 PM				04:30 PM			
+0 mins.	0	0	0	0	0	401	149	550	**32**	0	116	148	0	557	**39**	596
+15 mins.	0	0	0	0	0	451	**150**	601	20	0	129	149	0	574	24	598
+30 mins.	0	0	0	0	0	**458**	144	**602**	22	0	121	143	0	586	25	611
+45 mins.	0	0	0	0	0	438	128	566	29	0	**147**	**176**	0	**595**	28	**623**
Total Volume	0	0	0	0	0	1748	571	2319	103	0	513	616	0	2312	116	2428
% App. Total	0	0	0		0	75.4	24.6		16.7	0	83.3		0	95.2	4.8	
PHF	.000	.000	.000	.000	.000	.954	.952	.963	.805	.000	.872	.875	.000	.971	.744	.974

Counts Unlimited Inc.
25286 Jaclyn Avenue
Moreno Valley, CA 92557
951-485-7934

City of Murrieta
N/S: I-215 Northbound Ramps
E/W: Clinton Keith Road
Weather: Sunny

File Name : MUR215NCKAM
Site Code : 9311137
Start Date : 12/9/2009
Page No : 1

Groups Printed- Total Volume

	I-215 Northbound On Ramp Southbound				Clinton Keith Road Westbound				I-215 Northbound Off Ramp Northbound				Clinton Keith Road Eastbound				
Start Time	Left	Thru	Right	App. Total	Left	Thru	Right	App. Total	Left	Thru	Right	App. Total	Left	Thru	Right	App. Total	Int. Total
07:00 AM	0	0	0	0	0	127	37	164	27	0	193	220	71	228	0	299	683
07:15 AM	0	0	0	0	0	170	37	207	25	0	205	230	95	192	0	287	724
07:30 AM	0	0	0	0	0	150	18	168	35	0	24	59	163	41	0	204	431
07:45 AM	0	0	0	0	0	42	8	50	41	0	10	51	138	25	0	163	264
Total	0	0	0	0	0	489	100	589	128	0	432	560	467	486	0	953	2102
08:00 AM	0	0	0	0	0	59	6	65	40	0	12	52	115	34	0	149	266
08:15 AM	0	0	0	0	0	50	7	57	51	1	6	58	125	34	0	159	274
08:30 AM	0	0	0	0	0	53	5	58	50	0	8	58	139	18	0	157	273
08:45 AM	0	0	0	0	0	32	6	38	50	0	12	62	138	30	0	168	268
Total	0	0	0	0	0	194	24	218	191	1	38	230	517	116	0	633	1081
Grand Total	0	0	0	0	0	683	124	807	319	1	470	790	984	602	0	1586	3183
Apprch %	0	0	0		0	84.6	15.4		40.4	0.1	59.5		62	38	0		
Total %	0	0	0	0	0	21.5	3.9	25.4	10	0	14.8	24.8	30.9	18.9	0	49.8	

	I-215 Northbound On Ramp Southbound				Clinton Keith Road Westbound				I-215 Northbound Off Ramp Northbound				Clinton Keith Road Eastbound				
Start Time	Left	Thru	Right	App. Total	Left	Thru	Right	App. Total	Left	Thru	Right	App. Total	Left	Thru	Right	App. Total	Int. Total
Peak Hour Analysis From 07:00 AM to 08:45 AM - Peak 1 of 1																	
Peak Hour for Entire Intersection Begins at 07:00 AM																	
07:00 AM	0	0	0	0	0	127	**37**	164	27	0	193	220	71	**228**	0	**299**	683
07:15 AM	0	0	0	0	0	**170**	37	**207**	25	0	**205**	**230**	95	192	0	287	**724**
07:30 AM	0	0	0	0	0	150	18	168	35	0	24	59	**163**	41	0	204	431
07:45 AM	0	0	0	0	0	42	8	50	**41**	0	10	51	138	25	0	163	264
Total Volume	0	0	0	0	0	489	100	589	128	0	432	560	467	486	0	953	2102
% App. Total	0	0	0		0	83	17		22.9	0	77.1		49	51	0		
PHF	.000	.000	.000	.000	.000	.719	.676	.711	.780	.000	.527	.609	.716	.533	.000	.797	.726

Counts Unlimited Inc.
25286 Jaclyn Avenue
Moreno Valley, CA 92557
951-485-7934

City of Murrieta
N/S: I-215 Northbound Ramps
E/W: Clinton Keith Road
Weather: Sunny

File Name : MUR215NCKAM
Site Code : 9311137
Start Date : 12/9/2009
Page No : 2

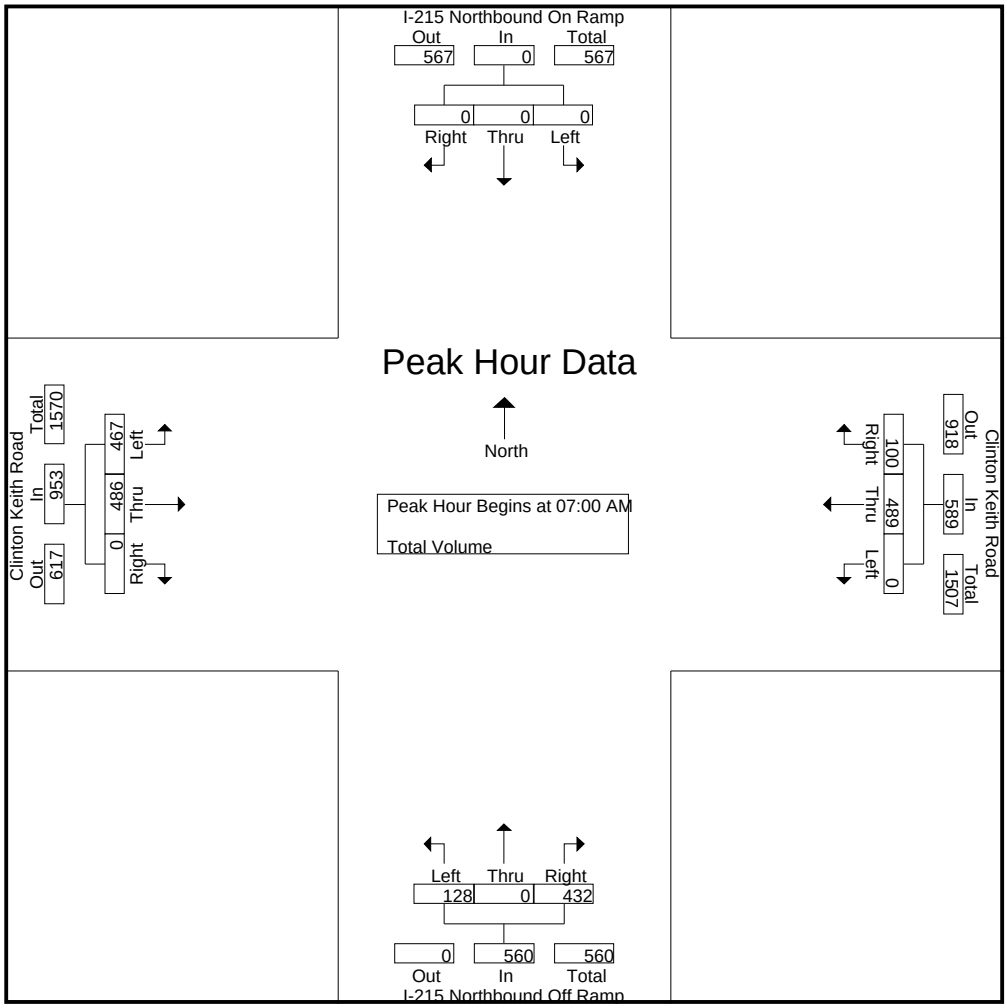

Peak Hour Analysis From 07:00 AM to 08:45 AM - Peak 1 of 1

Peak Hour for Each Approach Begins at:

	07:00 AM				07:00 AM				07:00 AM				07:00 AM			
+0 mins.	0	0	0	0	0	127	**37**	164	27	0	193	220	71	**228**	0	**299**
+15 mins.	0	0	0	0	0	**170**	37	**207**	25	0	**205**	**230**	95	192	0	287
+30 mins.	0	0	0	0	0	150	18	168	35	0	24	59	**163**	41	0	204
+45 mins.	0	0	0	0	0	42	8	50	**41**	0	10	51	138	25	0	163
Total Volume	0	0	0	0	0	489	100	589	128	0	432	560	467	486	0	953
% App. Total	0	0	0		0	83	17		22.9	0	77.1		49	51	0	
PHF	.000	.000	.000	.000	.000	.719	.676	.711	.780	.000	.527	.609	.716	.533	.000	.797

Counts Unlimited Inc.
25286 Jaclyn Avenue
Moreno Valley, CA 92557
951-485-7934

City of Murrieta
N/S: I-215 Northbound Ramps
E/W: Clinton Keith Road
Weather: Sunny

File Name : MUR215NCKPM
Site Code : 9311137
Start Date : 12/9/2009
Page No : 1

Groups Printed- Total Volume

	I-215 Northbound On Ramp Southbound				Clinton Keith Road Westbound				I-215 Northbound Off Ramp Northbound				Clinton Keith Road Eastbound				
Start Time	Left	Thru	Right	App. Total	Left	Thru	Right	App. Total	Left	Thru	Right	App. Total	Left	Thru	Right	App. Total	Int. Total
04:00 PM	0	0	0	0	0	67	19	86	69	1	23	93	129	63	0	192	371
04:15 PM	0	0	0	0	0	57	24	81	69	0	22	91	111	60	0	171	343
04:30 PM	0	0	0	0	0	65	18	83	56	0	25	81	117	74	0	191	355
04:45 PM	0	0	0	0	0	72	20	92	47	0	18	65	98	77	0	175	332
Total	0	0	0	0	0	261	81	342	241	1	88	330	455	274	0	729	1401
05:00 PM	0	0	0	0	0	93	16	109	39	0	14	53	102	67	0	169	331
05:15 PM	0	0	0	0	0	54	14	68	51	2	20	73	132	65	0	197	338
05:30 PM	0	0	0	0	0	51	14	65	48	0	17	65	135	52	0	187	317
05:45 PM	0	0	0	0	0	58	12	70	55	1	19	75	92	67	0	159	304
Total	0	0	0	0	0	256	56	312	193	3	70	266	461	251	0	712	1290
Grand Total	0	0	0	0	0	517	137	654	434	4	158	596	916	525	0	1441	2691
Apprch %	0	0	0		0	79.1	20.9		72.8	0.7	26.5		63.6	36.4	0		
Total %	0	0	0	0	0	19.2	5.1	24.3	16.1	0.1	5.9	22.1	34	19.5	0	53.5	

	I-215 Northbound On Ramp Southbound				Clinton Keith Road Westbound				I-215 Northbound Off Ramp Northbound				Clinton Keith Road Eastbound				
Start Time	Left	Thru	Right	App. Total	Left	Thru	Right	App. Total	Left	Thru	Right	App. Total	Left	Thru	Right	App. Total	Int. Total
Peak Hour Analysis From 04:00 PM to 05:45 PM - Peak 1 of 1																	
Peak Hour for Entire Intersection Begins at 04:00 PM																	
04:00 PM	0	0	0	0	0	67	19	86	**69**	**1**	23	**93**	**129**	63	0	**192**	**371**
04:15 PM	0	0	0	0	0	57	**24**	81	69	0	22	91	111	60	0	171	343
04:30 PM	0	0	0	0	0	65	18	83	56	0	**25**	81	117	74	0	191	355
04:45 PM	0	0	0	0	0	**72**	20	**92**	47	0	18	65	98	**77**	0	175	332
Total Volume	0	0	0	0	0	261	81	342	241	1	88	330	455	274	0	729	1401
% App. Total	0	0	0		0	76.3	23.7		73	0.3	26.7		62.4	37.6	0		
PHF	.000	.000	.000	.000	.000	.906	.844	.929	.873	.250	.880	.887	.882	.890	.000	.949	.944

Counts Unlimited Inc.
25286 Jaclyn Avenue
Moreno Valley, CA 92557
951-485-7934

City of Murrieta
N/S: I-215 Northbound Ramps
E/W: Clinton Keith Road
Weather: Sunny

File Name : MUR215NCKPM
Site Code : 9311137
Start Date : 12/9/2009
Page No : 2

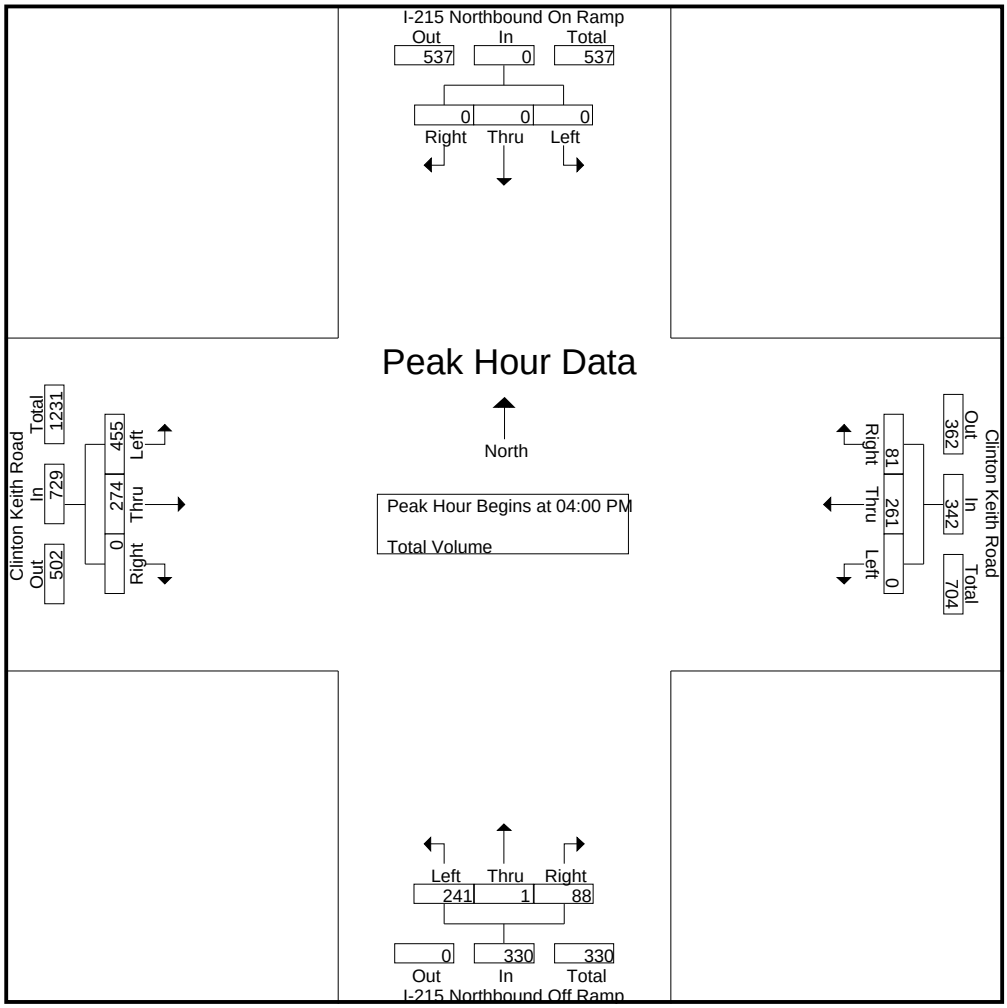

Peak Hour Analysis From 04:00 PM to 05:45 PM - Peak 1 of 1

Peak Hour for Each Approach Begins at:

	04:00 PM				04:15 PM				04:00 PM				04:30 PM			
+0 mins.	0	0	0	0	0	57	**24**	81	**69**	**1**	23	**93**	117	74	0	191
+15 mins.	0	0	0	0	0	65	18	83	69	0	22	91	98	**77**	0	175
+30 mins.	0	0	0	0	0	72	20	92	56	0	**25**	81	102	67	0	169
+45 mins.	0	0	0	0	0	**93**	16	**109**	47	0	18	65	**132**	65	0	**197**
Total Volume	0	0	0	0	0	287	78	365	241	1	88	330	449	283	0	732
% App. Total	0	0	0		0	78.6	21.4		73	0.3	26.7		61.3	38.7	0	
PHF	.000	.000	.000	.000	.000	.772	.813	.837	.873	.250	.880	.887	.850	.919	.000	.929

Counts Unlimited Inc.
25286 Jaclyn Avenue
Moreno Valley, CA 92557
951-485-7934

City of Murrieta
N/S: I-15 Southbound Ramps
E/W: Murrieta Hot Springs Road
Weather: Sunny

File Name : MUR15SMHSAM
Site Code : 9311028
Start Date : 12/8/2009
Page No : 1

Groups Printed- Total Volume

	I-15 Southbound Off-On Ramps Southbound				Murrieta Hot Springs Road Westbound				I-15 Southbound On Ramp Northbound				Murrieta Hot Springs Road Eastbound				
Start Time	Left	Thru	Right	App. Total	Left	Thru	Right	App. Total	Left	Thru	Right	App. Total	Left	Thru	Right	App. Total	Int. Total
07:00 AM	114	0	53	167	0	123	8	131	0	0	0	0	0	66	35	101	399
07:15 AM	127	0	72	199	0	132	17	149	0	0	0	0	0	70	42	112	460
07:30 AM	180	0	117	297	0	157	13	170	0	0	0	0	0	72	51	123	590
07:45 AM	249	0	122	371	0	264	12	276	0	0	0	0	0	94	40	134	781
Total	670	0	364	1034	0	676	50	726	0	0	0	0	0	302	168	470	2230
08:00 AM	182	0	111	293	0	224	12	236	0	0	0	0	0	80	47	127	656
08:15 AM	175	0	82	257	0	220	9	229	0	0	0	0	0	108	41	149	635
08:30 AM	167	0	82	249	0	248	14	262	0	0	0	0	0	164	66	230	741
08:45 AM	187	0	113	300	0	317	15	332	0	0	0	0	0	133	47	180	812
Total	711	0	388	1099	0	1009	50	1059	0	0	0	0	0	485	201	686	2844
Grand Total	1381	0	752	2133	0	1685	100	1785	0	0	0	0	0	787	369	1156	5074
Apprch %	64.7	0	35.3		0	94.4	5.6		0	0	0		0	68.1	31.9		
Total %	27.2	0	14.8	42	0	33.2	2	35.2	0	0	0	0	0	15.5	7.3	22.8	

	I-15 Southbound Off-On Ramps Southbound				Murrieta Hot Springs Road Westbound				I-15 Southbound On Ramp Northbound				Murrieta Hot Springs Road Eastbound				
Start Time	Left	Thru	Right	App. Total	Left	Thru	Right	App. Total	Left	Thru	Right	App. Total	Left	Thru	Right	App. Total	Int. Total
Peak Hour Analysis From 07:00 AM to 08:30 AM - Peak 1 of 1																	
Peak Hour for Entire Intersection Begins at 07:45 AM																	
07:45 AM	**249**	0	**122**	**371**	0	**264**	12	**276**	0	0	0	0	0	94	40	134	**781**
08:00 AM	182	0	111	293	0	224	12	236	0	0	0	0	0	80	47	127	656
08:15 AM	175	0	82	257	0	220	9	229	0	0	0	0	0	108	41	149	635
08:30 AM	167	0	82	249	0	248	**14**	262	0	0	0	0	0	**164**	**66**	**230**	741
Total Volume	773	0	397	1170	0	956	47	1003	0	0	0	0	0	446	194	640	2813
% App. Total	66.1	0	33.9		0	95.3	4.7		0	0	0		0	69.7	30.3		
PHF	.776	.000	.814	.788	.000	.905	.839	.909	.000	.000	.000	.000	.000	.680	.735	.696	.900

Counts Unlimited Inc.
25286 Jaclyn Avenue
Moreno Valley, CA 92557
951-485-7934

City of Murrieta
N/S: I-15 Southbound Ramps
E/W: Murrieta Hot Springs Road
Weather: Sunny

File Name : MUR15SMHSAM
Site Code : 9311028
Start Date : 12/8/2009
Page No : 2

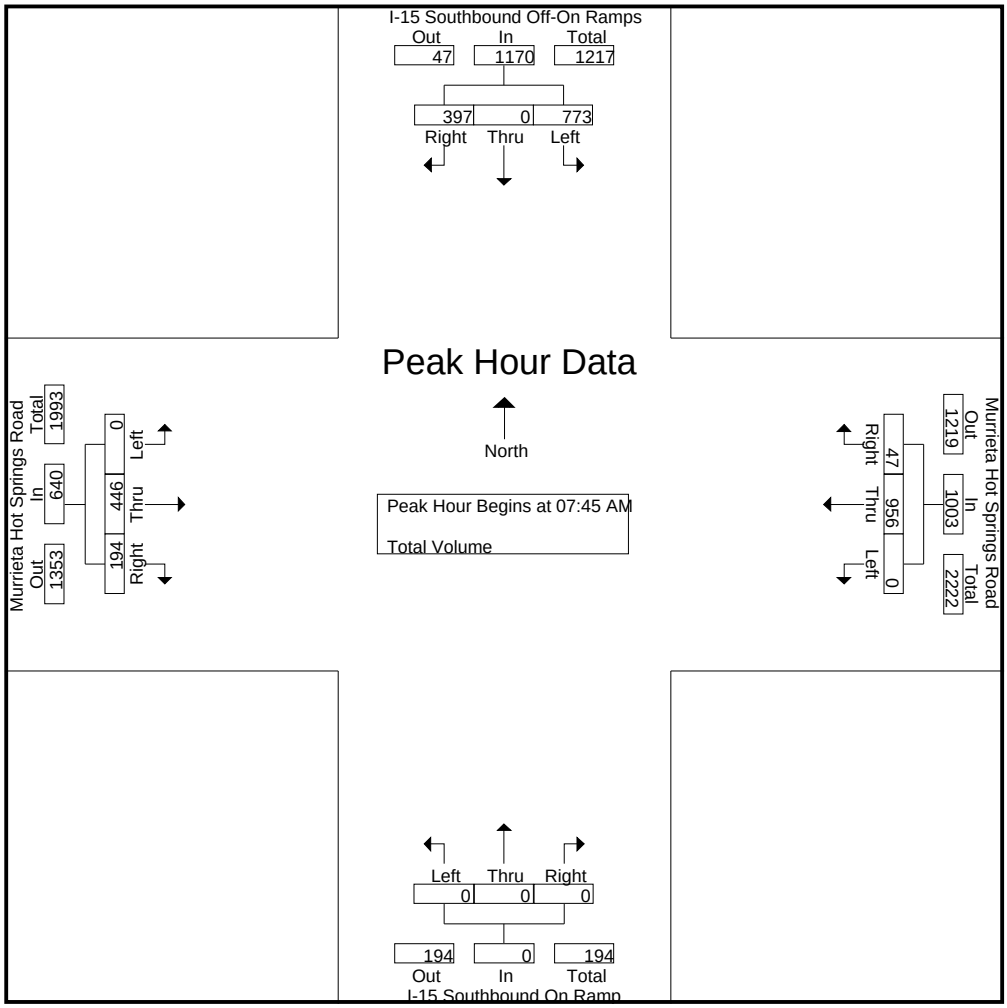

Peak Hour Analysis From 07:00 AM to 08:30 AM - Peak 1 of 1

Peak Hour for Each Approach Begins at:

	07:30 AM				07:45 AM				07:00 AM				07:45 AM			
+0 mins.	180	0	117	297	0	**264**	12	**276**	0	0	0	0	0	94	40	134
+15 mins.	**249**	0	**122**	**371**	0	224	12	236	0	0	0	0	0	80	47	127
+30 mins.	182	0	111	293	0	220	9	229	0	0	0	0	0	108	41	149
+45 mins.	175	0	82	257	0	248	**14**	262	0	0	0	0	0	**164**	**66**	**230**
Total Volume	786	0	432	1218	0	956	47	1003	0	0	0	0	0	446	194	640
% App. Total	64.5	0	35.5		0	95.3	4.7		0	0	0		0	69.7	30.3	
PHF	.789	.000	.885	.821	.000	.905	.839	.909	.000	.000	.000	.000	.000	.680	.735	.696

Counts Unlimited Inc.
25286 Jaclyn Avenue
Moreno Valley, CA 92557
951-485-7934

City of Murrieta
N/S: I-15 Southbound Ramps
E/W: Murrieta Hot Springs Road
Weather: Sunny

File Name : MUR15SMHSPM
Site Code : 9311028
Start Date : 12/8/2009
Page No : 1

Groups Printed- Total Volume

	I-15 Southbound Off-On Ramps Southbound				Murrieta Hot Springs Road Westbound				I-15 Southbound On Ramp Northbound				Murrieta Hot Springs Road Eastbound				
Start Time	Left	Thru	Right	App. Total	Left	Thru	Right	App. Total	Left	Thru	Right	App. Total	Left	Thru	Right	App. Total	Int. Total
04:00 PM	187	0	69	256	0	279	28	307	0	0	0	0	0	342	75	417	980
04:15 PM	216	0	74	290	0	287	30	317	0	0	0	0	0	394	83	477	1084
04:30 PM	203	0	77	280	0	280	23	303	0	0	0	0	0	381	83	464	1047
04:45 PM	209	0	74	283	0	273	23	296	0	0	0	0	0	396	88	484	1063
Total	815	0	294	1109	0	1119	104	1223	0	0	0	0	0	1513	329	1842	4174
05:00 PM	214	0	51	265	0	238	36	274	0	0	0	0	0	428	112	540	1079
05:15 PM	200	0	52	252	0	269	24	293	0	0	0	0	0	448	59	507	1052
05:30 PM	217	0	61	278	0	217	37	254	0	0	0	0	0	355	78	433	965
05:45 PM	189	0	55	244	0	263	15	278	0	0	0	0	0	316	56	372	894
Total	820	0	219	1039	0	987	112	1099	0	0	0	0	0	1547	305	1852	3990
Grand Total	1635	0	513	2148	0	2106	216	2322	0	0	0	0	0	3060	634	3694	8164
Apprch %	76.1	0	23.9		0	90.7	9.3		0	0	0		0	82.8	17.2		
Total %	20	0	6.3	26.3	0	25.8	2.6	28.4	0	0	0	0	0	37.5	7.8	45.2	

	I-15 Southbound Off-On Ramps Southbound				Murrieta Hot Springs Road Westbound				I-15 Southbound On Ramp Northbound				Murrieta Hot Springs Road Eastbound				
Start Time	Left	Thru	Right	App. Total	Left	Thru	Right	App. Total	Left	Thru	Right	App. Total	Left	Thru	Right	App. Total	Int. Total
Peak Hour Analysis From 04:00 PM to 05:30 PM - Peak 1 of 1																	
Peak Hour for Entire Intersection Begins at 04:15 PM																	
04:15 PM	**216**	0	74	**290**	0	**287**	30	**317**	0	0	0	0	0	394	83	477	**1084**
04:30 PM	203	0	**77**	280	0	280	23	303	0	0	0	0	0	381	83	464	1047
04:45 PM	209	0	74	283	0	273	23	296	0	0	0	0	0	396	88	484	1063
05:00 PM	214	0	51	265	0	238	**36**	274	0	0	0	0	0	**428**	**112**	**540**	1079
Total Volume	842	0	276	1118	0	1078	112	1190	0	0	0	0	0	1599	366	1965	4273
% App. Total	75.3	0	24.7		0	90.6	9.4		0	0	0		0	81.4	18.6		
PHF	.975	.000	.896	.964	.000	.939	.778	.938	.000	.000	.000	.000	.000	.934	.817	.910	.985

Counts Unlimited Inc.
25286 Jaclyn Avenue
Moreno Valley, CA 92557
951-485-7934

City of Murrieta
N/S: I-15 Southbound Ramps
E/W: Murrieta Hot Springs Road
Weather: Sunny

File Name : MUR15SMHSPM
Site Code : 9311028
Start Date : 12/8/2009
Page No : 2

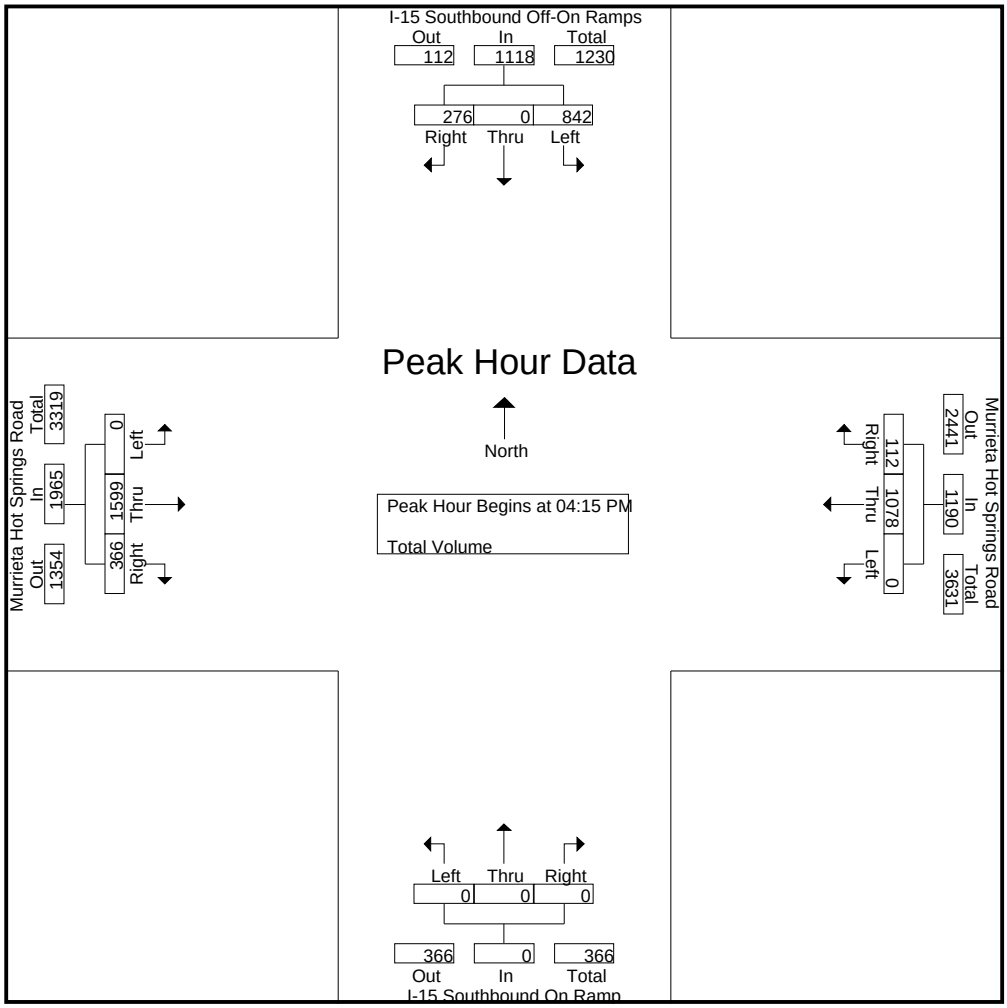

Peak Hour Analysis From 04:00 PM to 05:30 PM - Peak 1 of 1

Peak Hour for Each Approach Begins at:

	04:15 PM				04:00 PM				04:00 PM				04:30 PM			
+0 mins.	**216**	0	74	**290**	0	279	28	307	0	0	0	0	0	381	83	464
+15 mins.	203	0	**77**	280	0	**287**	**30**	**317**	0	0	0	0	0	396	88	484
+30 mins.	209	0	74	283	0	280	23	303	0	0	0	0	0	428	**112**	**540**
+45 mins.	214	0	51	265	0	273	23	296	0	0	0	0	0	**448**	59	507
Total Volume	842	0	276	1118	0	1119	104	1223	0	0	0	0	0	1653	342	1995
% App. Total	75.3	0	24.7		0	91.5	8.5		0	0	0		0	82.9	17.1	
PHF	.975	.000	.896	.964	.000	.975	.867	.965	.000	.000	.000	.000	.000	.922	.763	.924

Counts Unlimited Inc.
25286 Jaclyn Avenue
Moreno Valley, CA 92557
951-485-7934

City of Murrieta
N/S: I-15 Northbound Ramps
E/W: Murrieta Hot Springs Road
Weather: Sunny

File Name : MUR15NMHSAM
Site Code : 9311043
Start Date : 12/8/2009
Page No : 1

Groups Printed- Total Volume

	I-15 Northbound On Ramp Southbound				Murrieta Hot Springs Road Westbound				I-15 Northbound Off Ramp Northbound				Murrieta Hot Springs Road Eastbound				
Start Time	Left	Thru	Right	App. Total	Left	Thru	Right	App. Total	Left	Thru	Right	App. Total	Left	Thru	Right	App. Total	Int. Total
07:00 AM	0	0	0	0	0	102	158	260	21	0	9	30	26	153	0	179	469
07:15 AM	0	0	0	0	0	137	227	364	24	2	14	40	21	176	0	197	601
07:30 AM	0	0	0	0	0	146	178	324	29	0	14	43	15	236	0	251	618
07:45 AM	0	0	0	0	0	232	183	415	55	0	19	74	24	317	0	341	830
Total	0	0	0	0	0	617	746	1363	129	2	56	187	86	882	0	968	2518
08:00 AM	0	0	0	0	0	180	151	331	50	0	24	74	13	237	0	250	655
08:15 AM	0	0	0	0	0	182	164	346	56	0	29	85	24	255	0	279	710
08:30 AM	0	0	0	0	0	212	183	395	51	0	19	70	46	285	0	331	796
08:45 AM	0	0	0	0	0	266	195	461	78	0	19	97	32	291	0	323	881
Total	0	0	0	0	0	840	693	1533	235	0	91	326	115	1068	0	1183	3042
Grand Total	0	0	0	0	0	1457	1439	2896	364	2	147	513	201	1950	0	2151	5560
Apprch %	0	0	0		0	50.3	49.7		71	0.4	28.7		9.3	90.7	0		
Total %	0	0	0	0	0	26.2	25.9	52.1	6.5	0	2.6	9.2	3.6	35.1	0	38.7	

	I-15 Northbound On Ramp Southbound				Murrieta Hot Springs Road Westbound				I-15 Northbound Off Ramp Northbound				Murrieta Hot Springs Road Eastbound				
Start Time	Left	Thru	Right	App. Total	Left	Thru	Right	App. Total	Left	Thru	Right	App. Total	Left	Thru	Right	App. Total	Int. Total
Peak Hour Analysis From 07:00 AM to 08:45 AM - Peak 1 of 1																	
Peak Hour for Entire Intersection Begins at 08:00 AM																	
08:00 AM	0	0	0	0	0	180	151	331	50	0	24	74	13	237	0	250	655
08:15 AM	0	0	0	0	0	182	164	346	56	0	**29**	85	24	255	0	279	710
08:30 AM	0	0	0	0	0	212	183	395	51	0	19	70	**46**	285	0	**331**	796
08:45 AM	0	0	0	0	0	**266**	**195**	**461**	**78**	0	19	**97**	32	**291**	0	323	**881**
Total Volume	0	0	0	0	0	840	693	1533	235	0	91	326	115	1068	0	1183	3042
% App. Total	0	0	0		0	54.8	45.2		72.1	0	27.9		9.7	90.3	0		
PHF	.000	.000	.000	.000	.000	.789	.888	.831	.753	.000	.784	.840	.625	.918	.000	.894	.863

Counts Unlimited Inc.
25286 Jaclyn Avenue
Moreno Valley, CA 92557
951-485-7934

City of Murrieta
N/S: I-15 Northbound Ramps
E/W: Murrieta Hot Springs Road
Weather: Sunny

File Name : MUR15NMHSAM
Site Code : 9311043
Start Date : 12/8/2009
Page No : 2

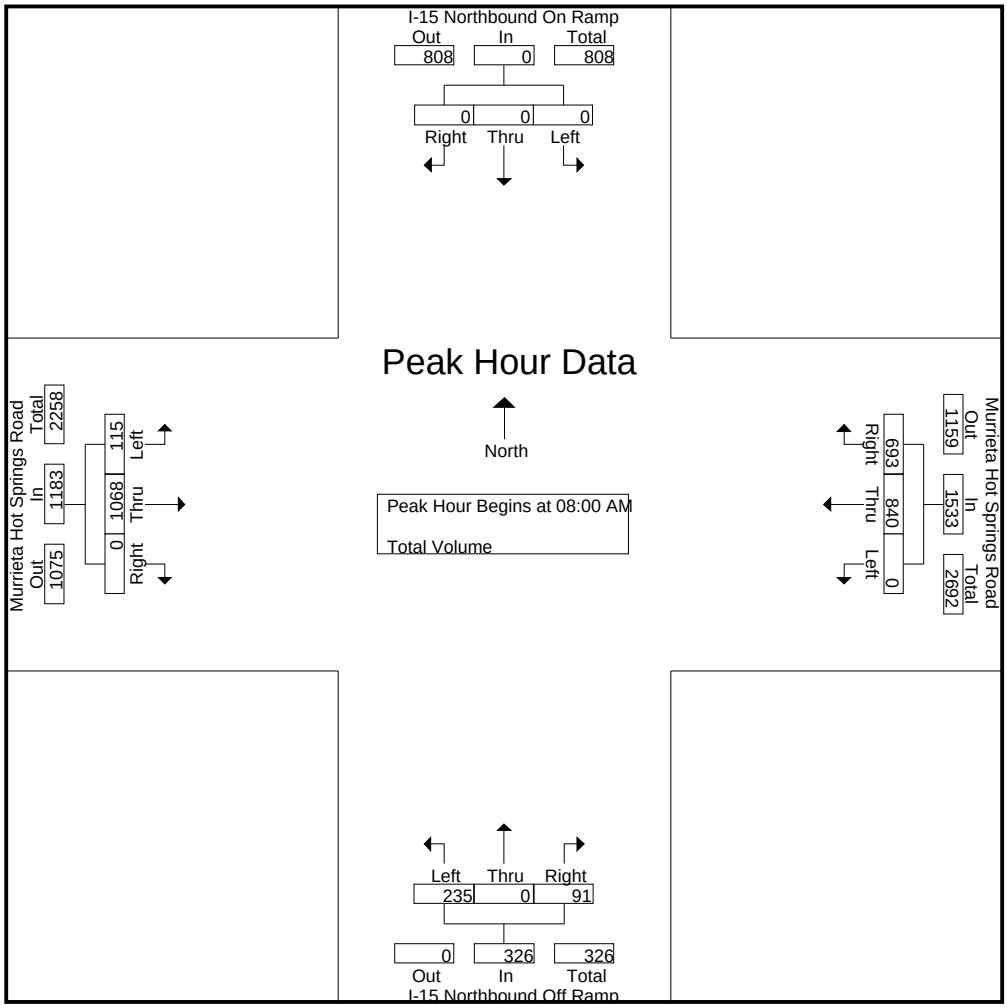

Peak Hour Analysis From 07:00 AM to 08:45 AM - Peak 1 of 1

Peak Hour for Each Approach Begins at:

	07:00 AM				08:00 AM				08:00 AM				07:45 AM			
+0 mins.	0	0	0	0	0	180	151	331	50	0	24	74	24	**317**	0	**341**
+15 mins.	0	0	0	0	0	182	164	346	56	0	**29**	85	13	237	0	250
+30 mins.	0	0	0	0	0	212	183	395	51	0	19	70	24	255	0	279
+45 mins.	0	0	0	0	0	**266**	**195**	**461**	**78**	0	19	**97**	**46**	285	0	331
Total Volume	0	0	0	0	0	840	693	1533	235	0	91	326	107	1094	0	1201
% App. Total	0	0	0		0	54.8	45.2		72.1	0	27.9		8.9	91.1	0	
PHF	.000	.000	.000	.000	.000	.789	.888	.831	.753	.000	.784	.840	.582	.863	.000	.880

Counts Unlimited Inc.
25286 Jaclyn Avenue
Moreno Valley, CA 92557
951-485-7934

City of Murrieta
N/S: I-15 Northbound Ramps
E/W: Murrieta Hot Springs Road
Weather: Sunny

File Name : MUR15NMHSPM
Site Code : 9311043
Start Date : 12/8/2009
Page No : 1

Groups Printed- Total Volume

	I-15 Northbound On Ramp Southbound				Murrieta Hot Springs Road Westbound				I-15 Northbound Off Ramp Northbound				Murrieta Hot Springs Road Eastbound				
Start Time	Left	Thru	Right	App. Total	Left	Thru	Right	App. Total	Left	Thru	Right	App. Total	Left	Thru	Right	App. Total	Int. Total
04:00 PM	0	0	0	0	0	210	224	434	101	0	46	147	98	445	0	543	1124
04:15 PM	0	0	0	0	0	244	254	498	76	0	44	120	95	487	0	582	1200
04:30 PM	0	0	0	0	0	211	169	380	90	0	36	126	127	474	0	601	1107
04:45 PM	0	0	0	0	0	230	243	473	65	0	33	98	108	476	0	584	1155
Total	0	0	0	0	0	895	890	1785	332	0	159	491	428	1882	0	2310	4586
05:00 PM	0	0	0	0	0	197	243	440	86	0	44	130	130	500	0	630	1200
05:15 PM	0	0	0	0	0	230	258	488	60	0	53	113	125	507	0	632	1233
05:30 PM	0	0	0	0	0	195	241	436	64	0	50	114	122	459	0	581	1131
05:45 PM	0	0	0	0	0	213	186	399	64	0	59	123	76	430	0	506	1028
Total	0	0	0	0	0	835	928	1763	274	0	206	480	453	1896	0	2349	4592
Grand Total	0	0	0	0	0	1730	1818	3548	606	0	365	971	881	3778	0	4659	9178
Apprch %	0	0	0		0	48.8	51.2		62.4	0	37.6		18.9	81.1	0		
Total %	0	0	0	0	0	18.8	19.8	38.7	6.6	0	4	10.6	9.6	41.2	0	50.8	

	I-15 Northbound On Ramp Southbound				Murrieta Hot Springs Road Westbound				I-15 Northbound Off Ramp Northbound				Murrieta Hot Springs Road Eastbound				
Start Time	Left	Thru	Right	App. Total	Left	Thru	Right	App. Total	Left	Thru	Right	App. Total	Left	Thru	Right	App. Total	Int. Total
Peak Hour Analysis From 04:00 PM to 05:45 PM - Peak 1 of 1																	
Peak Hour for Entire Intersection Begins at 04:45 PM																	
04:45 PM	0	0	0	0	0	**230**	243	473	65	0	33	98	108	476	0	584	1155
05:00 PM	0	0	0	0	0	197	243	440	**86**	0	44	**130**	**130**	500	0	630	1200
05:15 PM	0	0	0	0	0	230	**258**	**488**	60	0	**53**	113	125	**507**	0	**632**	**1233**
05:30 PM	0	0	0	0	0	195	241	436	64	0	50	114	122	459	0	581	1131
Total Volume	0	0	0	0	0	852	985	1837	275	0	180	455	485	1942	0	2427	4719
% App. Total	0	0	0		0	46.4	53.6		60.4	0	39.6		20	80	0		
PHF	.000	.000	.000	.000	.000	.926	.954	.941	.799	.000	.849	.875	.933	.958	.000	.960	.957

Counts Unlimited Inc.
25286 Jaclyn Avenue
Moreno Valley, CA 92557
951-485-7934

City of Murrieta
N/S: I-15 Northbound Ramps
E/W: Murrieta Hot Springs Road
Weather: Sunny

File Name : MUR15NMHSPM
Site Code : 9311043
Start Date : 12/8/2009
Page No : 2

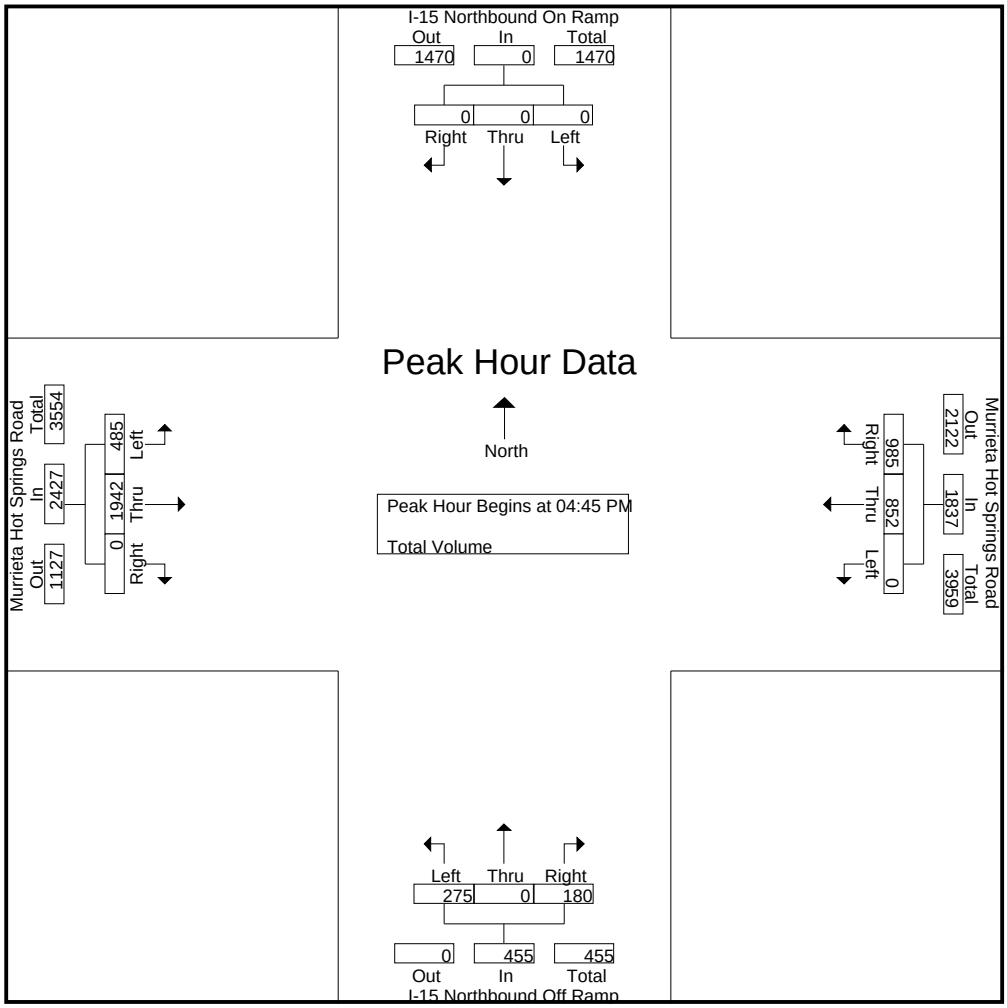

Peak Hour Analysis From 04:00 PM to 05:45 PM - Peak 1 of 1

Peak Hour for Each Approach Begins at:

	04:00 PM				04:45 PM				04:00 PM				04:30 PM			
+0 mins.	0	0	0	0	0	**230**	243	473	**101**	0	**46**	**147**	127	474	0	601
+15 mins.	0	0	0	0	0	197	243	440	76	0	44	120	108	476	0	584
+30 mins.	0	0	0	0	0	230	**258**	**488**	90	0	36	126	**130**	500	0	630
+45 mins.	0	0	0	0	0	195	241	436	65	0	33	98	125	**507**	0	**632**
Total Volume	0	0	0	0	0	852	985	1837	332	0	159	491	490	1957	0	2447
% App. Total	0	0	0		0	46.4	53.6		67.6	0	32.4		20	80	0	
PHF	.000	.000	.000	.000	.000	.926	.954	.941	.822	.000	.864	.835	.942	.965	.000	.968

Counts Unlimited Inc.
25286 Jaclyn Avenue
Moreno Valley, CA 92557
951-485-7934

City of Menifee
N/S: Menifee Road
E/W: Scott Road
Weather: Sunny

File Name : MENMESCAM
Site Code : 9311022
Start Date : 12/9/2009
Page No : 1

Groups Printed- Total Volume

	Menifee Road Southbound				Scott Road Westbound				Menifee Road Northbound				Scott Road Eastbound				
Start Time	Left	Thru	Right	App. Total	Left	Thru	Right	App. Total	Left	Thru	Right	App. Total	Left	Thru	Right	App. Total	Int. Total
07:00 AM	12	14	23	49	14	137	6	157	51	9	5	65	16	98	9	123	394
07:15 AM	19	18	22	59	21	166	20	207	53	14	14	81	19	112	15	146	493
07:30 AM	23	15	28	66	24	123	25	172	39	29	28	96	18	65	12	95	429
07:45 AM	26	17	27	70	10	117	34	161	24	23	30	77	21	89	18	128	436
Total	80	64	100	244	69	543	85	697	167	75	77	319	74	364	54	492	1752
08:00 AM	21	7	34	62	7	86	20	113	33	19	19	71	21	94	17	132	378
08:15 AM	20	20	19	59	7	85	30	122	34	34	9	77	13	106	12	131	389
08:30 AM	20	29	28	77	9	116	21	146	34	23	11	68	13	59	18	90	381
08:45 AM	22	18	23	63	7	105	13	125	35	6	4	45	18	83	17	118	351
Total	83	74	104	261	30	392	84	506	136	82	43	261	65	342	64	471	1499
Grand Total	163	138	204	505	99	935	169	1203	303	157	120	580	139	706	118	963	3251
Apprch %	32.3	27.3	40.4		8.2	77.7	14		52.2	27.1	20.7		14.4	73.3	12.3		
Total %	5	4.2	6.3	15.5	3	28.8	5.2	37	9.3	4.8	3.7	17.8	4.3	21.7	3.6	29.6	

	Menifee Road Southbound				Scott Road Westbound				Menifee Road Northbound				Scott Road Eastbound				
Start Time	Left	Thru	Right	App. Total	Left	Thru	Right	App. Total	Left	Thru	Right	App. Total	Left	Thru	Right	App. Total	Int. Total
Peak Hour Analysis From 07:00 AM to 08:45 AM - Peak 1 of 1																	
Peak Hour for Entire Intersection Begins at 07:00 AM																	
07:00 AM	12	14	23	49	14	137	6	157	51	9	5	65	16	98	9	123	394
07:15 AM	19	**18**	22	59	21	**166**	20	**207**	**53**	14	14	81	19	**112**	15	**146**	**493**
07:30 AM	23	15	**28**	66	**24**	123	25	172	39	**29**	28	**96**	18	65	12	95	429
07:45 AM	**26**	17	27	**70**	10	117	**34**	161	24	23	**30**	77	**21**	89	**18**	128	436
Total Volume	80	64	100	244	69	543	85	697	167	75	77	319	74	364	54	492	1752
% App. Total	32.8	26.2	41		9.9	77.9	12.2		52.4	23.5	24.1		15	74	11		
PHF	.769	.889	.893	.871	.719	.818	.625	.842	.788	.647	.642	.831	.881	.813	.750	.842	.888

Counts Unlimited Inc.
25286 Jaclyn Avenue
Moreno Valley, CA 92557
951-485-7934

City of Menifee
N/S: Menifee Road
E/W: Scott Road
Weather: Sunny

File Name : MENMESCAM
Site Code : 9311022
Start Date : 12/9/2009
Page No : 2

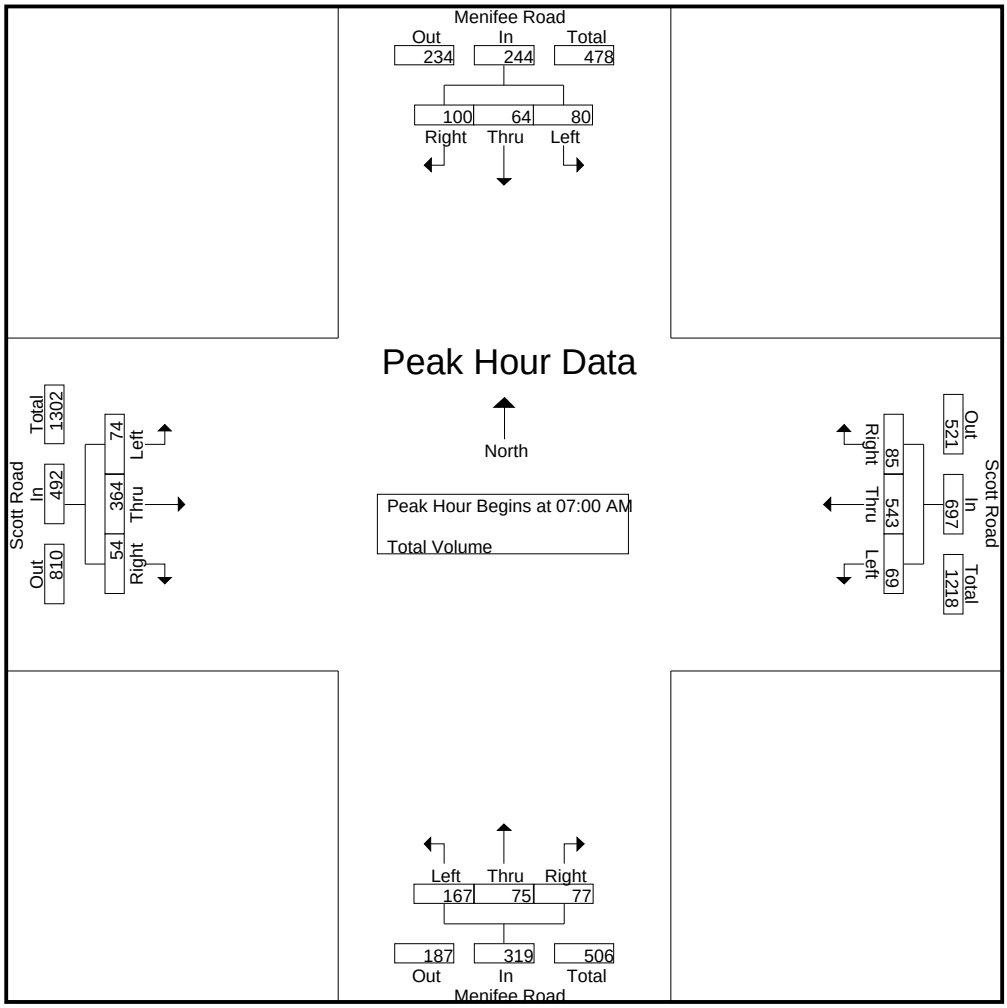

Peak Hour Analysis From 07:00 AM to 08:45 AM - Peak 1 of 1

Peak Hour for Each Approach Begins at:

	07:45 AM				07:00 AM				07:15 AM				07:15 AM			
+0 mins.	**26**	17	27	70	14	137	6	157	**53**	14	14	81	19	**112**	15	**146**
+15 mins.	21	7	**34**	62	21	**166**	20	**207**	39	**29**	28	**96**	18	65	12	95
+30 mins.	20	20	19	59	**24**	123	25	172	24	23	**30**	77	**21**	89	**18**	128
+45 mins.	20	**29**	28	**77**	10	117	**34**	161	33	19	19	71	21	94	17	132
Total Volume	87	73	108	268	69	543	85	697	149	85	91	325	79	360	62	501
% App. Total	32.5	27.2	40.3		9.9	77.9	12.2		45.8	26.2	28		15.8	71.9	12.4	
PHF	.837	.629	.794	.870	.719	.818	.625	.842	.703	.733	.758	.846	.940	.804	.861	.858

Counts Unlimited Inc.
25286 Jaclyn Avenue
Moreno Valley, CA 92557
951-485-7934

City of Menifee
N/S: Menifee Road
E/W: Scott Road
Weather: Sunny

File Name : MENMESCPM
Site Code : 9311022
Start Date : 12/9/2009
Page No : 1

Groups Printed- Total Volume

	Menifee Road Southbound				Scott Road Westbound				Menifee Road Northbound				Scott Road Eastbound				
Start Time	Left	Thru	Right	App. Total	Left	Thru	Right	App. Total	Left	Thru	Right	App. Total	Left	Thru	Right	App. Total	Int. Total
04:00 PM	20	11	20	51	14	111	22	147	26	19	20	65	45	103	31	179	442
04:15 PM	16	14	22	52	6	118	20	144	32	18	11	61	37	113	33	183	440
04:30 PM	10	10	30	50	16	114	25	155	27	8	16	51	29	146	38	213	469
04:45 PM	11	10	22	43	9	120	31	160	29	13	15	57	42	140	35	217	477
Total	57	45	94	196	45	463	98	606	114	58	62	234	153	502	137	792	1828
05:00 PM	16	12	29	57	8	104	15	127	22	13	15	50	39	125	31	195	429
05:15 PM	11	11	26	48	15	121	31	167	19	14	19	52	35	134	55	224	491
05:30 PM	12	16	19	47	11	96	13	120	22	13	9	44	39	135	35	209	420
05:45 PM	7	18	17	42	11	72	26	109	22	21	15	58	39	124	35	198	407
Total	46	57	91	194	45	393	85	523	85	61	58	204	152	518	156	826	1747
Grand Total	103	102	185	390	90	856	183	1129	199	119	120	438	305	1020	293	1618	3575
Apprch %	26.4	26.2	47.4		8	75.8	16.2		45.4	27.2	27.4		18.9	63	18.1		
Total %	2.9	2.9	5.2	10.9	2.5	23.9	5.1	31.6	5.6	3.3	3.4	12.3	8.5	28.5	8.2	45.3	

	Menifee Road Southbound				Scott Road Westbound				Menifee Road Northbound				Scott Road Eastbound				
Start Time	Left	Thru	Right	App. Total	Left	Thru	Right	App. Total	Left	Thru	Right	App. Total	Left	Thru	Right	App. Total	Int. Total
Peak Hour Analysis From 04:00 PM to 05:45 PM - Peak 1 of 1																	
Peak Hour for Entire Intersection Begins at 04:30 PM																	
04:30 PM	10	10	**30**	50	**16**	114	25	155	27	8	16	51	29	**146**	38	213	469
04:45 PM	11	10	22	43	9	120	**31**	160	**29**	13	15	**57**	**42**	140	35	217	477
05:00 PM	**16**	**12**	29	**57**	8	104	15	127	22	13	15	50	39	125	31	195	429
05:15 PM	11	11	26	48	15	**121**	31	**167**	19	**14**	**19**	52	35	134	**55**	**224**	**491**
Total Volume	48	43	107	198	48	459	102	609	97	48	65	210	145	545	159	849	1866
% App. Total	24.2	21.7	54		7.9	75.4	16.7		46.2	22.9	31		17.1	64.2	18.7		
PHF	.750	.896	.892	.868	.750	.948	.823	.912	.836	.857	.855	.921	.863	.933	.723	.948	.950

Counts Unlimited Inc.
25286 Jaclyn Avenue
Moreno Valley, CA 92557
951-485-7934

City of Menifee
N/S: Menifee Road
E/W: Scott Road
Weather: Sunny

File Name : MENMESCPM
Site Code : 9311022
Start Date : 12/9/2009
Page No : 2

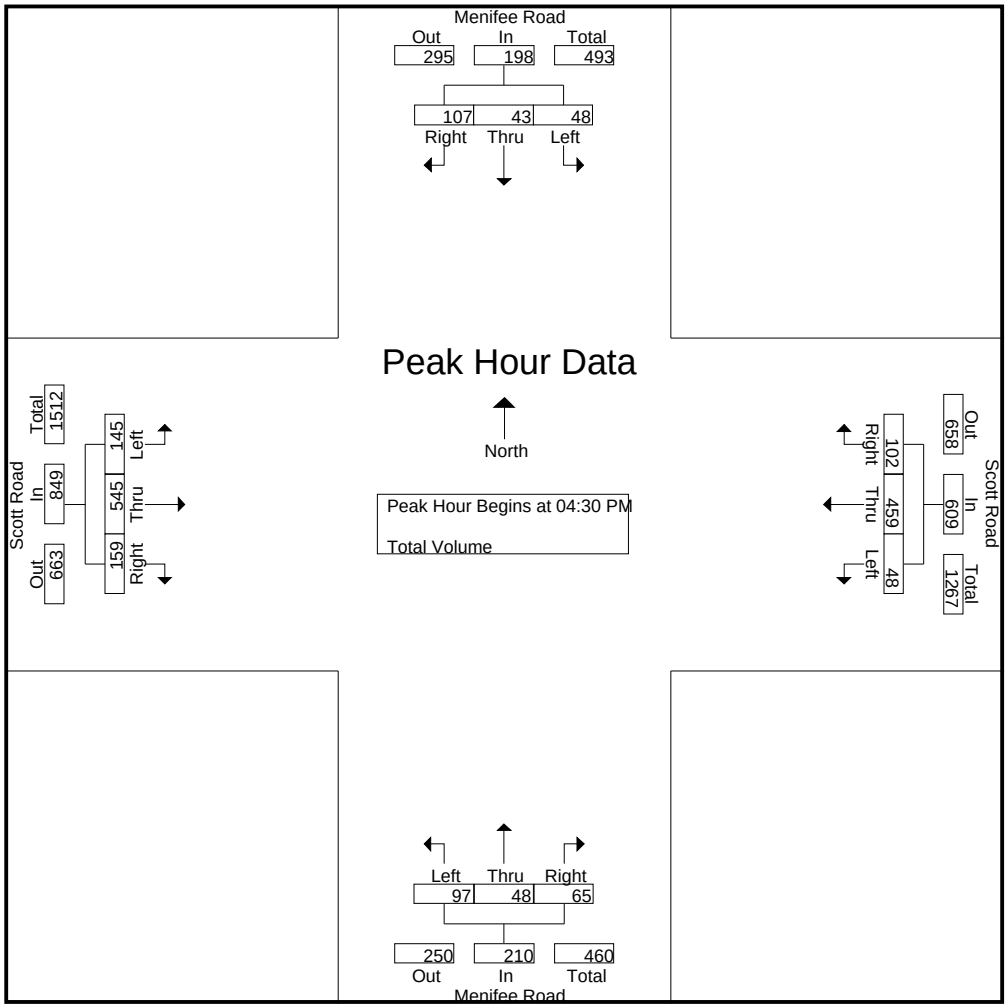

Peak Hour Analysis From 04:00 PM to 05:45 PM - Peak 1 of 1

Peak Hour for Each Approach Begins at:

	04:15 PM				04:30 PM				04:00 PM				04:30 PM			
+0 mins.	**16**	**14**	22	52	**16**	114	25	155	26	**19**	**20**	**65**	29	**146**	38	213
+15 mins.	10	10	**30**	50	9	120	**31**	160	**32**	18	11	61	**42**	140	35	217
+30 mins.	11	10	22	43	8	104	15	127	27	8	16	51	39	125	31	195
+45 mins.	16	12	29	**57**	15	**121**	31	**167**	29	13	15	57	35	134	**55**	**224**
Total Volume	53	46	103	202	48	459	102	609	114	58	62	234	145	545	159	849
% App. Total	26.2	22.8	51		7.9	75.4	16.7		48.7	24.8	26.5		17.1	64.2	18.7	
PHF	.828	.821	.858	.886	.750	.948	.823	.912	.891	.763	.775	.900	.863	.933	.723	.948

Counts Unlimited Inc.
25286 Jaclyn Avenue
Moreno Valley, CA 92557
951-485-7934

County of Riverside
N/S: Winchester Road (SR-79)
E/W: Thompson Rd/Max Gillis Boulevard
Weather: Sunny

File Name : CRVWITHAM
Site Code : 9311028
Start Date : 12/9/2009
Page No : 1

Groups Printed- Total Volume

	Winchester Road (SR-79) Southbound				Thompson Road Westbound				Winchester Road (SR-79) Northbound				Max Gillis Boulavard Eastbound				
Start Time	Left	Thru	Right	App. Total	Left	Thru	Right	App. Total	Left	Thru	Right	App. Total	Left	Thru	Right	App. Total	Int. Total
07:00 AM	5	178	12	195	31	22	3	56	48	107	18	173	12	10	61	83	507
07:15 AM	6	228	11	245	39	23	2	64	46	119	21	186	15	7	70	92	587
07:30 AM	1	263	12	276	46	38	2	86	69	123	21	213	7	12	92	111	686
07:45 AM	2	246	9	257	30	43	0	73	92	122	22	236	7	8	86	101	667
Total	14	915	44	973	146	126	7	279	255	471	82	808	41	37	309	387	2447
08:00 AM	7	232	10	249	42	73	3	118	101	131	45	277	10	16	147	173	817
08:15 AM	2	231	14	247	40	58	1	99	96	120	27	243	9	22	183	214	803
08:30 AM	2	211	16	229	38	12	1	51	52	121	17	190	18	19	150	187	657
08:45 AM	2	170	7	179	65	33	0	98	31	116	19	166	11	14	80	105	548
Total	13	844	47	904	185	176	5	366	280	488	108	876	48	71	560	679	2825
Grand Total	27	1759	91	1877	331	302	12	645	535	959	190	1684	89	108	869	1066	5272
Apprch %	1.4	93.7	4.8		51.3	46.8	1.9		31.8	56.9	11.3		8.3	10.1	81.5		
Total %	0.5	33.4	1.7	35.6	6.3	5.7	0.2	12.2	10.1	18.2	3.6	31.9	1.7	2	16.5	20.2	

	Winchester Road (SR-79) Southbound				Thompson Road Westbound				Winchester Road (SR-79) Northbound				Max Gillis Boulavard Eastbound				
Start Time	Left	Thru	Right	App. Total	Left	Thru	Right	App. Total	Left	Thru	Right	App. Total	Left	Thru	Right	App. Total	Int. Total
Peak Hour Analysis From 07:00 AM to 08:45 AM - Peak 1 of 1																	
Peak Hour for Entire Intersection Begins at 07:30 AM																	
07:30 AM	1	**263**	12	**276**	**46**	38	2	86	69	123	21	213	7	12	92	111	686
07:45 AM	2	246	9	257	30	43	0	73	92	122	22	236	7	8	86	101	667
08:00 AM	**7**	232	10	249	42	**73**	**3**	**118**	**101**	**131**	**45**	**277**	**10**	16	147	173	**817**
08:15 AM	2	231	**14**	247	40	58	1	99	96	120	27	243	9	**22**	**183**	**214**	803
Total Volume	12	972	45	1029	158	212	6	376	358	496	115	969	33	58	508	599	2973
% App. Total	1.2	94.5	4.4		42	56.4	1.6		36.9	51.2	11.9		5.5	9.7	84.8		
PHF	.429	.924	.804	.932	.859	.726	.500	.797	.886	.947	.639	.875	.825	.659	.694	.700	.910

Counts Unlimited Inc.
25286 Jaclyn Avenue
Moreno Valley, CA 92557
951-485-7934

County of Riverside
N/S: Winchester Road (SR-79)
E/W: Thompson Rd/Max Gillis Boulevard
Weather: Sunny

File Name : CRVWITHAM
Site Code : 9311028
Start Date : 12/9/2009
Page No : 2

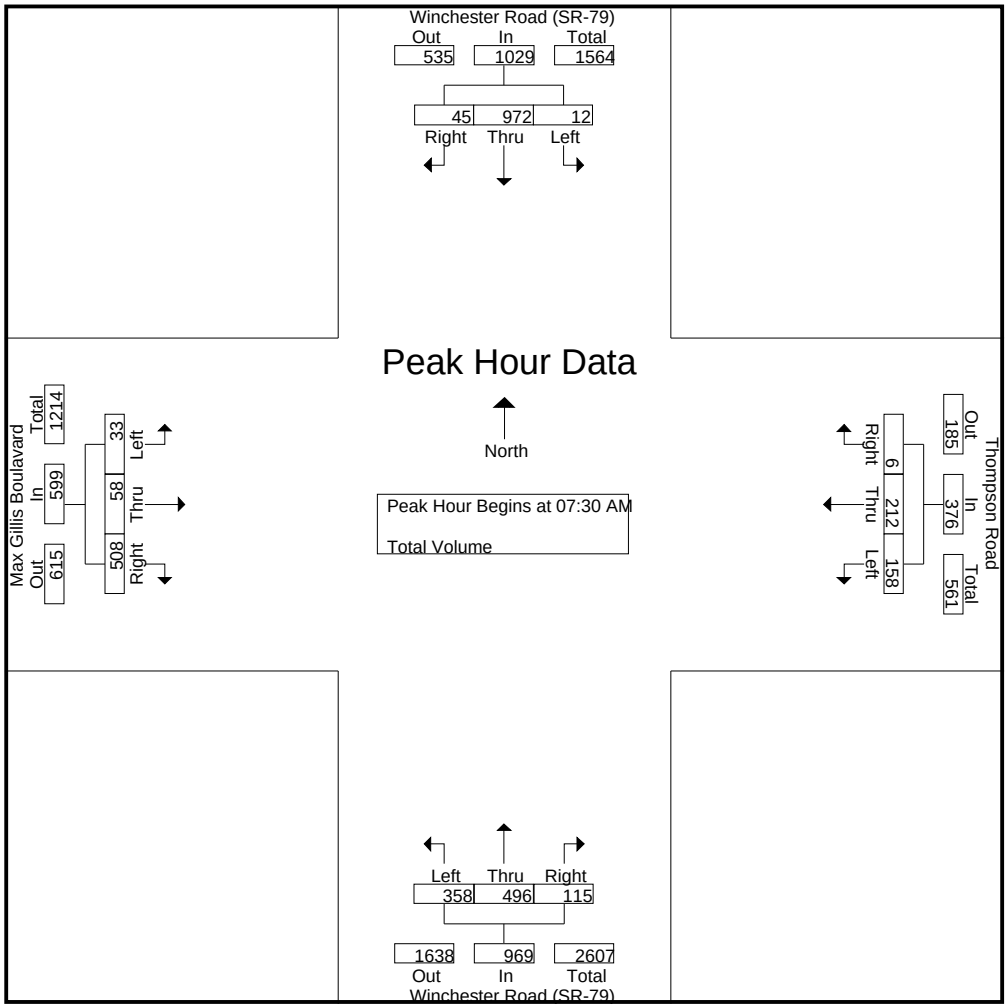

Peak Hour Analysis From 07:00 AM to 08:45 AM - Peak 1 of 1

Peak Hour for Each Approach Begins at:

	07:30 AM				07:30 AM				07:30 AM				08:00 AM			
+0 mins.	1	**263**	12	**276**	**46**	38	2	86	69	123	21	213	10	16	147	173
+15 mins.	2	246	9	257	30	43	0	73	92	122	22	236	9	**22**	**183**	**214**
+30 mins.	**7**	232	10	249	42	**73**	**3**	**118**	**101**	**131**	**45**	**277**	**18**	19	150	187
+45 mins.	2	231	**14**	247	40	58	1	99	96	120	27	243	11	14	80	105
Total Volume	12	972	45	1029	158	212	6	376	358	496	115	969	48	71	560	679
% App. Total	1.2	94.5	4.4		42	56.4	1.6		36.9	51.2	11.9		7.1	10.5	82.5	
PHF	.429	.924	.804	.932	.859	.726	.500	.797	.886	.947	.639	.875	.667	.807	.765	.793

Counts Unlimited Inc.
25286 Jaclyn Avenue
Moreno Valley, CA 92557
951-485-7934

County of Riverside
N/S: Winchester Road (SR-79)
E/W: Thompson Rd/Max Gillis Boulevard
Weather: Sunny

File Name : CRVWITHPM
Site Code : 9311028
Start Date : 12/9/2009
Page No : 1

Groups Printed- Total Volume

	Winchester Road (SR-79) Southbound				Thompson Road Westbound				Winchester Road (SR-79) Northbound				Max Gillis Boulavard Eastbound				
Start Time	Left	Thru	Right	App. Total	Left	Thru	Right	App. Total	Left	Thru	Right	App. Total	Left	Thru	Right	App. Total	Int. Total
04:00 PM	3	172	7	182	23	18	3	44	66	299	56	421	8	31	67	106	753
04:15 PM	4	167	6	177	18	14	1	33	98	274	47	419	10	20	53	83	712
04:30 PM	8	184	2	194	35	22	7	64	87	280	40	407	13	28	65	106	771
04:45 PM	5	164	6	175	25	22	4	51	82	291	64	437	12	26	81	119	782
Total	20	687	21	728	101	76	15	192	333	1144	207	1684	43	105	266	414	3018
05:00 PM	7	155	7	169	32	18	2	52	81	280	47	408	15	32	75	122	751
05:15 PM	5	158	9	172	28	22	2	52	107	324	71	502	10	26	80	116	842
05:30 PM	8	181	7	196	31	40	3	74	101	307	80	488	10	26	73	109	867
05:45 PM	5	142	9	156	41	23	3	67	120	286	53	459	9	31	66	106	788
Total	25	636	32	693	132	103	10	245	409	1197	251	1857	44	115	294	453	3248
Grand Total	45	1323	53	1421	233	179	25	437	742	2341	458	3541	87	220	560	867	6266
Apprch %	3.2	93.1	3.7		53.3	41	5.7		21	66.1	12.9		10	25.4	64.6		
Total %	0.7	21.1	0.8	22.7	3.7	2.9	0.4	7	11.8	37.4	7.3	56.5	1.4	3.5	8.9	13.8	

	Winchester Road (SR-79) Southbound				Thompson Road Westbound				Winchester Road (SR-79) Northbound				Max Gillis Boulavard Eastbound				
Start Time	Left	Thru	Right	App. Total	Left	Thru	Right	App. Total	Left	Thru	Right	App. Total	Left	Thru	Right	App. Total	Int. Total
Peak Hour Analysis From 04:00 PM to 05:45 PM - Peak 1 of 1																	
Peak Hour for Entire Intersection Begins at 05:00 PM																	
05:00 PM	7	155	7	169	32	18	2	52	81	280	47	408	**15**	**32**	75	**122**	751
05:15 PM	5	158	**9**	172	28	22	2	52	107	**324**	71	**502**	10	26	**80**	116	842
05:30 PM	**8**	**181**	7	**196**	31	**40**	**3**	**74**	101	307	**80**	488	10	26	73	109	**867**
05:45 PM	5	142	9	156	**41**	23	3	67	**120**	286	53	459	9	31	66	106	788
Total Volume	25	636	32	693	132	103	10	245	409	1197	251	1857	44	115	294	453	3248
% App. Total	3.6	91.8	4.6		53.9	42	4.1		22	64.5	13.5		9.7	25.4	64.9		
PHF	.781	.878	.889	.884	.805	.644	.833	.828	.852	.924	.784	.925	.733	.898	.919	.928	.937

Counts Unlimited Inc.
25286 Jaclyn Avenue
Moreno Valley, CA 92557
951-485-7934

County of Riverside
N/S: Winchester Road (SR-79)
E/W: Thompson Rd/Max Gillis Boulevard
Weather: Sunny

File Name : CRVWITHPM
Site Code : 9311028
Start Date : 12/9/2009
Page No : 2

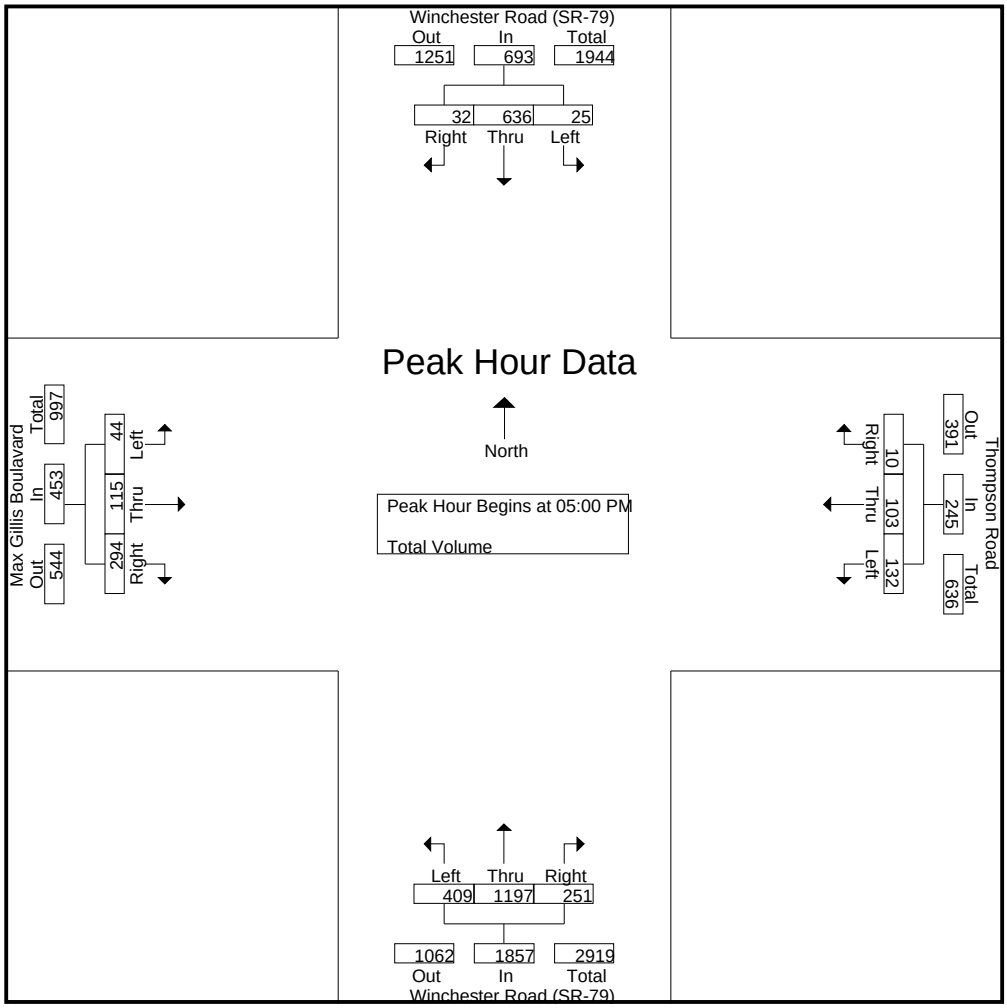

Peak Hour Analysis From 04:00 PM to 05:45 PM - Peak 1 of 1

Peak Hour for Each Approach Begins at:

	04:00 PM				05:00 PM				05:00 PM				04:45 PM			
+0 mins.	3	172	**7**	182	32	18	2	52	81	280	47	408	12	26	**81**	119
+15 mins.	4	167	6	177	28	22	2	52	107	**324**	71	**502**	**15**	**32**	75	**122**
+30 mins.	**8**	**184**	2	**194**	31	**40**	**3**	**74**	101	307	**80**	488	10	26	80	116
+45 mins.	5	164	6	175	**41**	23	3	67	**120**	286	53	459	10	26	73	109
Total Volume	20	687	21	728	132	103	10	245	409	1197	251	1857	47	110	309	466
% App. Total	2.7	94.4	2.9		53.9	42	4.1		22	64.5	13.5		10.1	23.6	66.3	
PHF	.625	.933	.750	.938	.805	.644	.833	.828	.852	.924	.784	.925	.783	.859	.954	.955

Counts Unlimited Inc.
25286 Jaclyn Avenue
Moreno Valley, CA 92557
951-485-7934

County of Riverside
N/S: Winchester Road (SR-79)
E/W: Scott Road-Washington Street
Weather: Sunny

File Name : CRVWISCAM
Site Code : 9311051
Start Date : 12/9/2009
Page No : 1

Groups Printed- Total Volume

	Winchester Road (SR-79) Southbound				Washington Street Westbound				Winchester Road (SR-79) Northbound				Scott Road Eastbound				
Start Time	Left	Thru	Right	App. Total	Left	Thru	Right	App. Total	Left	Thru	Right	App. Total	Left	Thru	Right	App. Total	Int. Total
07:00 AM	34	143	14	191	1	17	32	50	26	107	1	134	16	21	17	54	429
07:15 AM	39	200	14	253	0	14	32	46	27	99	3	129	22	23	14	59	487
07:30 AM	41	214	10	265	1	13	52	66	29	102	0	131	26	16	11	53	515
07:45 AM	25	177	22	224	1	18	31	50	17	120	1	138	26	16	13	55	467
Total	139	734	60	933	3	62	147	212	99	428	5	532	90	76	55	221	1898
08:00 AM	37	186	6	229	1	19	40	60	18	112	5	135	12	19	17	48	472
08:15 AM	28	163	18	209	0	14	31	45	13	85	3	101	13	10	18	41	396
08:30 AM	17	152	19	188	1	15	20	36	16	82	1	99	18	6	12	36	359
08:45 AM	20	136	18	174	0	13	23	36	10	108	4	122	20	6	8	34	366
Total	102	637	61	800	2	61	114	177	57	387	13	457	63	41	55	159	1593
Grand Total	241	1371	121	1733	5	123	261	389	156	815	18	989	153	117	110	380	3491
Apprch %	13.9	79.1	7		1.3	31.6	67.1		15.8	82.4	1.8		40.3	30.8	28.9		
Total %	6.9	39.3	3.5	49.6	0.1	3.5	7.5	11.1	4.5	23.3	0.5	28.3	4.4	3.4	3.2	10.9	

	Winchester Road (SR-79) Southbound				Washington Street Westbound				Winchester Road (SR-79) Northbound				Scott Road Eastbound				
Start Time	Left	Thru	Right	App. Total	Left	Thru	Right	App. Total	Left	Thru	Right	App. Total	Left	Thru	Right	App. Total	Int. Total
Peak Hour Analysis From 07:00 AM to 08:45 AM - Peak 1 of 1																	
Peak Hour for Entire Intersection Begins at 07:15 AM																	
07:15 AM	39	200	14	253	0	14	32	46	27	99	3	129	22	**23**	14	**59**	487
07:30 AM	**41**	**214**	10	**265**	**1**	13	**52**	**66**	**29**	102	0	131	**26**	16	11	53	**515**
07:45 AM	25	177	**22**	224	1	18	31	50	17	**120**	1	**138**	26	16	13	55	467
08:00 AM	37	186	6	229	1	**19**	40	60	18	112	**5**	135	12	19	**17**	48	472
Total Volume	142	777	52	971	3	64	155	222	91	433	9	533	86	74	55	215	1941
% App. Total	14.6	80	5.4		1.4	28.8	69.8		17.1	81.2	1.7		40	34.4	25.6		
PHF	.866	.908	.591	.916	.750	.842	.745	.841	.784	.902	.450	.966	.827	.804	.809	.911	.942

Counts Unlimited Inc.
25286 Jaclyn Avenue
Moreno Valley, CA 92557
951-485-7934

County of Riverside
N/S: Winchester Road (SR-79)
E/W: Scott Road-Washington Street
Weather: Sunny

File Name : CRVWISCAM
Site Code : 9311051
Start Date : 12/9/2009
Page No : 2

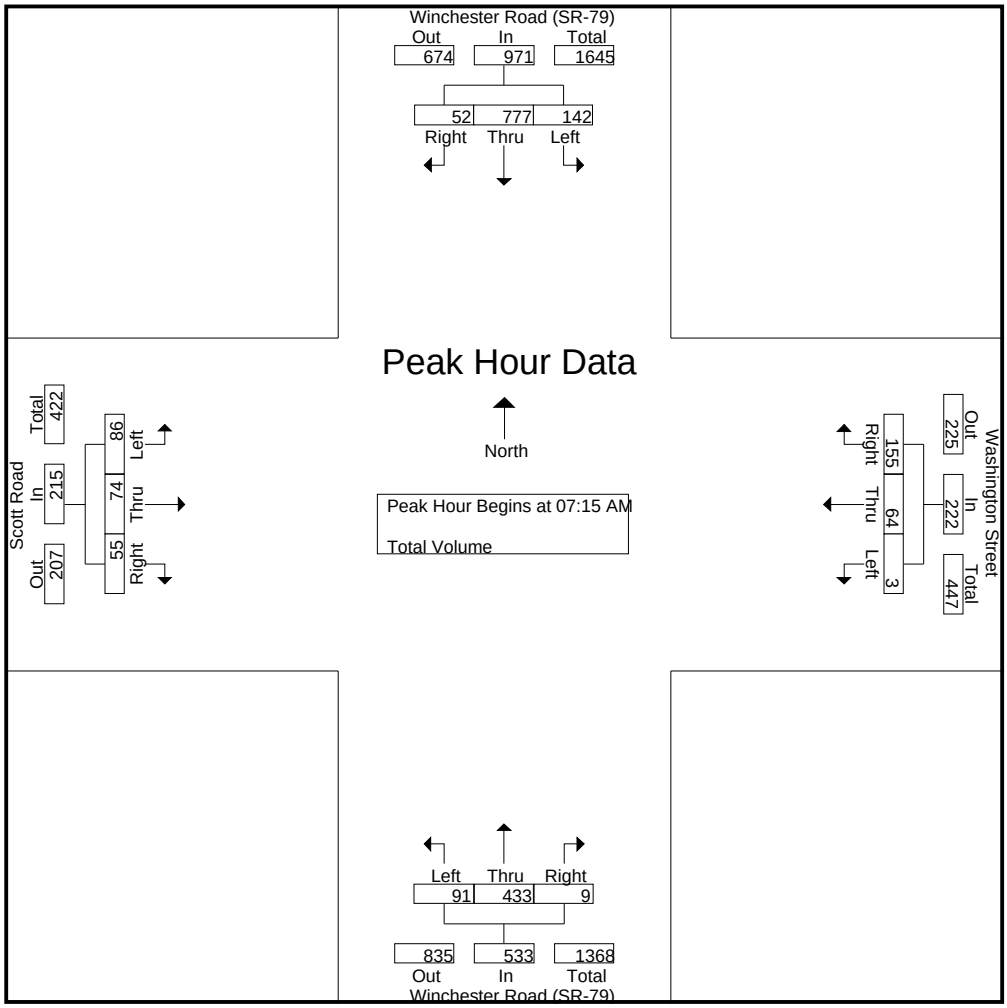

Peak Hour Analysis From 07:00 AM to 08:45 AM - Peak 1 of 1

Peak Hour for Each Approach Begins at:

	07:15 AM				07:15 AM				07:15 AM				07:00 AM			
+0 mins.	39	200	14	253	0	14	32	46	27	99	3	129	16	21	**17**	54
+15 mins.	**41**	**214**	10	**265**	**1**	13	**52**	**66**	**29**	102	0	131	22	**23**	14	**59**
+30 mins.	25	177	**22**	224	1	18	31	50	17	**120**	1	**138**	**26**	16	11	53
+45 mins.	37	186	6	229	1	**19**	40	60	18	112	**5**	135	26	16	13	55
Total Volume	142	777	52	971	3	64	155	222	91	433	9	533	90	76	55	221
% App. Total	14.6	80	5.4		1.4	28.8	69.8		17.1	81.2	1.7		40.7	34.4	24.9	
PHF	.866	.908	.591	.916	.750	.842	.745	.841	.784	.902	.450	.966	.865	.826	.809	.936

Counts Unlimited Inc.
25286 Jaclyn Avenue
Moreno Valley, CA 92557
951-485-7934

County of Riverside
N/S: Winchester Road (SR-79)
E/W: Scott Road-Washington Street
Weather: Sunny

File Name : CRVWISCPM
Site Code : 9311051
Start Date : 12/9/2009
Page No : 1

Groups Printed- Total Volume

	Winchester Road (SR-79) Southbound				Washington Street Westbound				Winchester Road (SR-79) Northbound				Scott Road Eastbound				
Start Time	Left	Thru	Right	App. Total	Left	Thru	Right	App. Total	Left	Thru	Right	App. Total	Left	Thru	Right	App. Total	Int. Total
04:00 PM	34	122	20	176	0	11	39	50	18	220	1	239	24	16	16	56	521
04:15 PM	34	129	23	186	0	14	36	50	25	208	1	234	17	15	14	46	516
04:30 PM	32	169	19	220	0	15	41	56	12	208	0	220	25	12	16	53	549
04:45 PM	23	133	18	174	0	19	55	74	20	255	1	276	15	17	21	53	577
Total	123	553	80	756	0	59	171	230	75	891	3	969	81	60	67	208	2163
05:00 PM	23	123	17	163	0	13	35	48	21	198	0	219	22	11	10	43	473
05:15 PM	12	141	23	176	1	20	57	78	20	221	1	242	16	10	15	41	537
05:30 PM	19	161	19	199	0	15	60	75	13	200	3	216	18	15	20	53	543
05:45 PM	22	106	15	143	0	9	40	49	13	200	1	214	16	15	29	60	466
Total	76	531	74	681	1	57	192	250	67	819	5	891	72	51	74	197	2019
Grand Total	199	1084	154	1437	1	116	363	480	142	1710	8	1860	153	111	141	405	4182
Apprch %	13.8	75.4	10.7		0.2	24.2	75.6		7.6	91.9	0.4		37.8	27.4	34.8		
Total %	4.8	25.9	3.7	34.4	0	2.8	8.7	11.5	3.4	40.9	0.2	44.5	3.7	2.7	3.4	9.7	

	Winchester Road (SR-79) Southbound				Washington Street Westbound				Winchester Road (SR-79) Northbound				Scott Road Eastbound				
Start Time	Left	Thru	Right	App. Total	Left	Thru	Right	App. Total	Left	Thru	Right	App. Total	Left	Thru	Right	App. Total	Int. Total
Peak Hour Analysis From 04:00 PM to 05:45 PM - Peak 1 of 1																	
Peak Hour for Entire Intersection Begins at 04:00 PM																	
04:00 PM	**34**	122	20	176	0	11	39	50	18	220	**1**	239	24	16	16	**56**	521
04:15 PM	34	129	**23**	186	0	14	36	50	**25**	208	1	234	17	15	14	46	516
04:30 PM	32	**169**	19	**220**	0	15	41	56	12	208	0	220	**25**	12	16	53	549
04:45 PM	23	133	18	174	0	**19**	**55**	**74**	20	**255**	1	**276**	15	**17**	**21**	53	**577**
Total Volume	123	553	80	756	0	59	171	230	75	891	3	969	81	60	67	208	2163
% App. Total	16.3	73.1	10.6		0	25.7	74.3		7.7	92	0.3		38.9	28.8	32.2		
PHF	.904	.818	.870	.859	.000	.776	.777	.777	.750	.874	.750	.878	.810	.882	.798	.929	.937

Counts Unlimited Inc.
25286 Jaclyn Avenue
Moreno Valley, CA 92557
951-485-7934

County of Riverside
N/S: Winchester Road (SR-79)
E/W: Scott Road-Washington Street
Weather: Sunny

File Name : CRVWISCPM
Site Code : 9311051
Start Date : 12/9/2009
Page No : 2

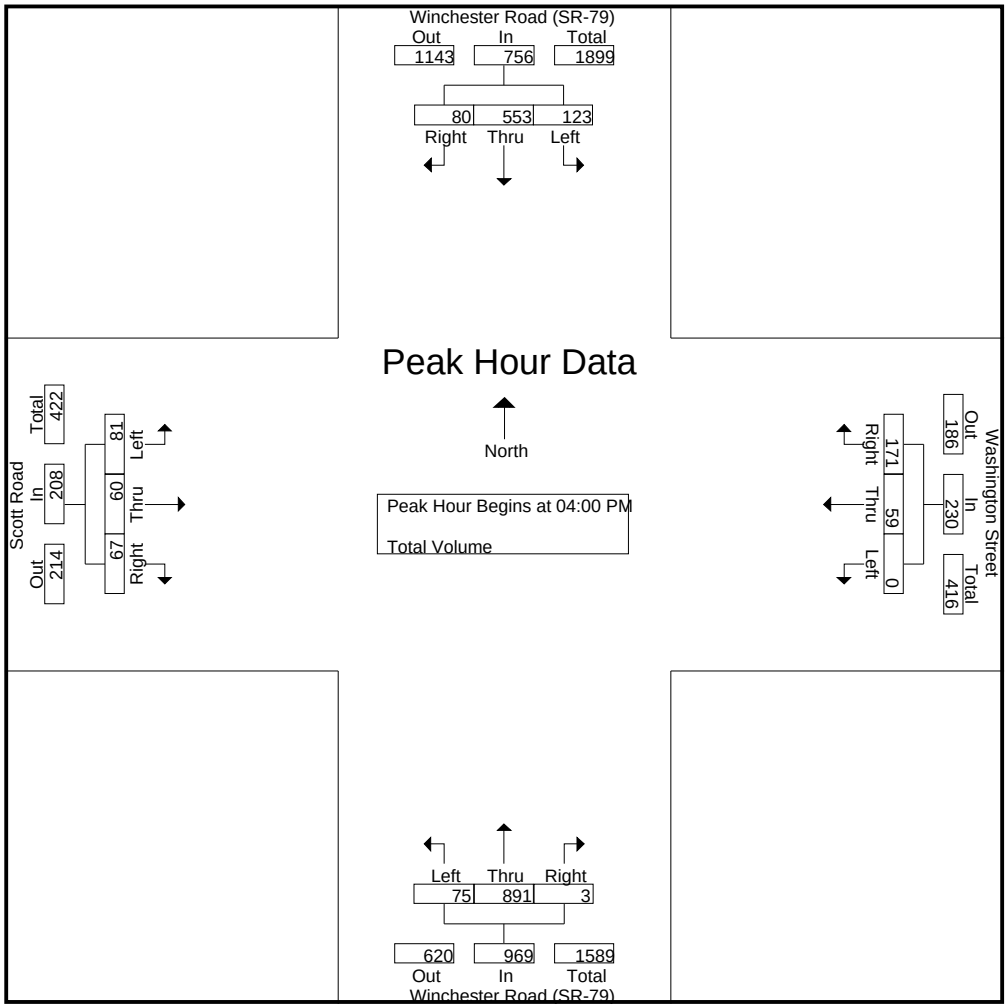

Peak Hour Analysis From 04:00 PM to 05:45 PM - Peak 1 of 1

Peak Hour for Each Approach Begins at:

	04:00 PM				04:45 PM				04:00 PM				04:00 PM			
+0 mins.	**34**	122	20	176	0	19	55	74	18	220	**1**	239	24	16	16	**56**
+15 mins.	34	129	**23**	186	0	13	35	48	**25**	208	1	234	17	15	14	46
+30 mins.	32	**169**	19	**220**	**1**	**20**	57	**78**	12	208	0	220	**25**	12	16	53
+45 mins.	23	133	18	174	0	15	**60**	75	20	**255**	1	**276**	15	**17**	**21**	53
Total Volume	123	553	80	756	1	67	207	275	75	891	3	969	81	60	67	208
% App. Total	16.3	73.1	10.6		0.4	24.4	75.3		7.7	92	0.3		38.9	28.8	32.2	
PHF	.904	.818	.870	.859	.250	.838	.863	.881	.750	.874	.750	.878	.810	.882	.798	.929

Counts Unlimited Inc.
25286 Jaclyn Avenue
Moreno Valley, CA 92557
951-485-7934

County of Riverside
N/S: Winchester Road (SR-79)
E/W: Keller Road
Weather: Sunny

File Name : CRVWIKEAM
Site Code : 9311063
Start Date : 12/9/2009
Page No : 1

Groups Printed- Total Volume

	Winchester Road (SR-79) Southbound				Keller Road Westbound				Winchester Road (SR-79) Northbound				Keller Road Eastbound				
Start Time	Left	Thru	Right	App. Total	Left	Thru	Right	App. Total	Left	Thru	Right	App. Total	Left	Thru	Right	App. Total	Int. Total
07:00 AM	0	157	0	157	0	0	2	2	0	125	0	125	0	0	0	0	284
07:15 AM	0	191	0	191	0	0	0	0	0	128	0	128	0	0	1	1	320
07:30 AM	0	215	0	215	0	0	0	0	0	129	0	129	0	0	0	0	344
07:45 AM	0	185	0	185	0	0	0	0	0	126	0	126	0	0	0	0	311
Total	0	748	0	748	0	0	2	2	0	508	0	508	0	0	1	1	1259
08:00 AM	0	202	0	202	0	0	0	0	0	119	0	119	0	0	0	0	321
08:15 AM	0	177	0	177	0	0	0	0	0	88	0	88	1	0	0	1	266
08:30 AM	0	163	0	163	0	0	0	0	0	97	1	98	1	0	0	1	262
08:45 AM	0	158	0	158	1	0	0	1	1	114	0	115	0	0	0	0	274
Total	0	700	0	700	1	0	0	1	1	418	1	420	2	0	0	2	1123
Grand Total	0	1448	0	1448	1	0	2	3	1	926	1	928	2	0	1	3	2382
Apprch %	0	100	0		33.3	0	66.7		0.1	99.8	0.1		66.7	0	33.3		
Total %	0	60.8	0	60.8	0	0	0.1	0.1	0	38.9	0	39	0.1	0	0	0.1	

	Winchester Road (SR-79) Southbound				Keller Road Westbound				Winchester Road (SR-79) Northbound				Keller Road Eastbound				
Start Time	Left	Thru	Right	App. Total	Left	Thru	Right	App. Total	Left	Thru	Right	App. Total	Left	Thru	Right	App. Total	Int. Total
Peak Hour Analysis From 07:00 AM to 08:45 AM - Peak 1 of 1																	
Peak Hour for Entire Intersection Begins at 07:15 AM																	
07:15 AM	0	191	0	191	0	0	0	0	0	128	0	128	0	0	**1**	**1**	320
07:30 AM	0	**215**	0	**215**	0	0	0	0	0	**129**	0	**129**	0	0	0	0	**344**
07:45 AM	0	185	0	185	0	0	0	0	0	126	0	126	0	0	0	0	311
08:00 AM	0	202	0	202	0	0	0	0	0	119	0	119	0	0	0	0	321
Total Volume	0	793	0	793	0	0	0	0	0	502	0	502	0	0	1	1	1296
% App. Total	0	100	0		0	0	0		0	100	0		0	0	100		
PHF	.000	.922	.000	.922	.000	.000	.000	.000	.000	.973	.000	.973	.000	.000	.250	.250	.942

Counts Unlimited Inc.
25286 Jaclyn Avenue
Moreno Valley, CA 92557
951-485-7934

County of Riverside
N/S: Winchester Road (SR-79)
E/W: Keller Road
Weather: Sunny

File Name : CRVWIKEAM
Site Code : 9311063
Start Date : 12/9/2009
Page No : 2

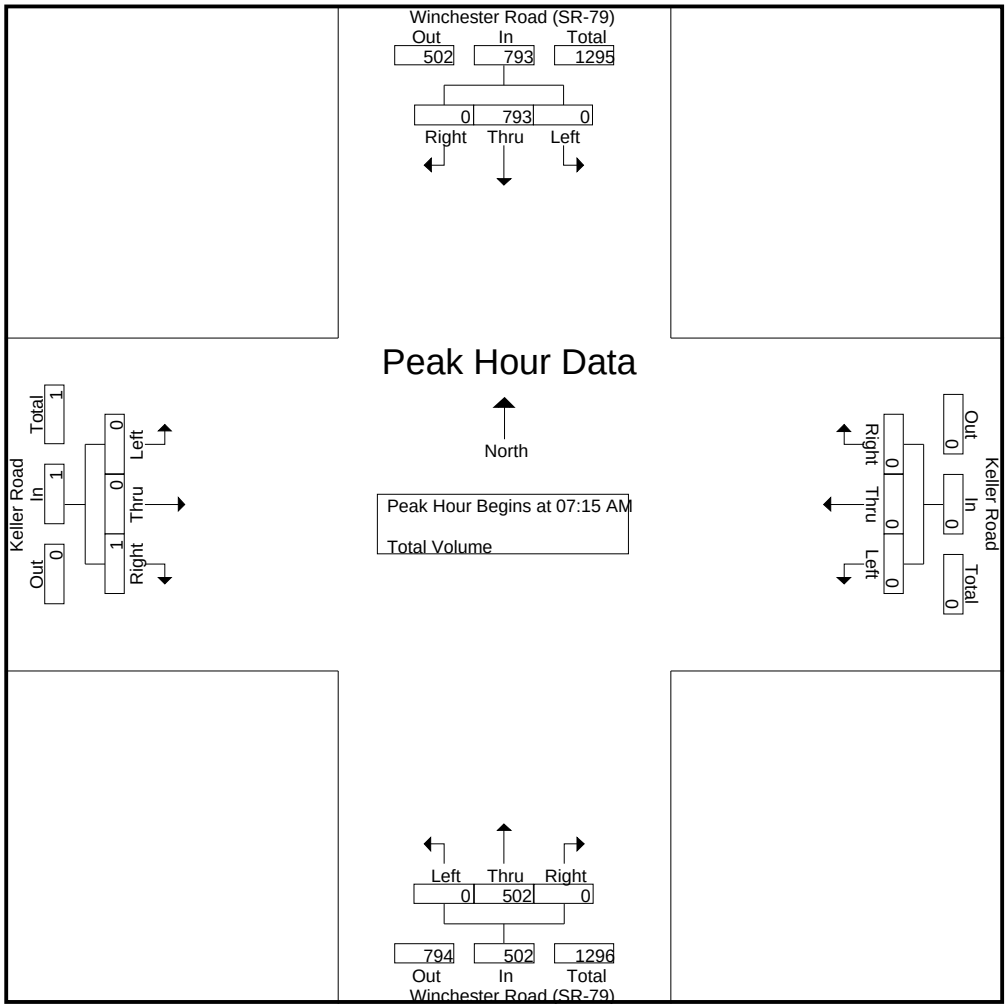

Peak Hour Analysis From 07:00 AM to 08:45 AM - Peak 1 of 1

Peak Hour for Each Approach Begins at:

	07:15 AM				07:00 AM				07:00 AM				07:45 AM			
+0 mins.	0	191	0	191	0	0	**2**	**2**	0	125	0	125	0	0	0	0
+15 mins.	0	**215**	0	**215**	0	0	0	0	0	128	0	128	0	0	0	0
+30 mins.	0	185	0	185	0	0	0	0	0	**129**	0	**129**	**1**	0	0	**1**
+45 mins.	0	202	0	202	0	0	0	0	0	126	0	126	1	0	0	1
Total Volume	0	793	0	793	0	0	2	2	0	508	0	508	2	0	0	2
% App. Total	0	100	0		0	0	100		0	100	0		100	0	0	
PHF	.000	.922	.000	.922	.000	.000	.250	.250	.000	.984	.000	.984	.500	.000	.000	.500

Counts Unlimited Inc.
25286 Jaclyn Avenue
Moreno Valley, CA 92557
951-485-7934

County of Riverside
N/S: Winchester Road (SR-79)
E/W: Keller Road
Weather: Sunny

File Name : CRVWIKEPM
Site Code : 9311063
Start Date : 12/9/2009
Page No : 1

Groups Printed- Total Volume

	Winchester Road (SR-79) Southbound				Keller Road Westbound				Winchester Road (SR-79) Northbound				Keller Road Eastbound				
Start Time	Left	Thru	Right	App. Total	Left	Thru	Right	App. Total	Left	Thru	Right	App. Total	Left	Thru	Right	App. Total	Int. Total
04:00 PM	0	157	2	159	0	0	0	0	1	248	0	249	0	0	0	0	408
04:15 PM	0	145	0	145	0	0	0	0	0	220	3	223	0	0	0	0	368
04:30 PM	0	174	0	174	0	0	0	0	0	207	0	207	0	0	0	0	381
04:45 PM	0	148	0	148	1	0	3	4	0	238	0	238	0	0	0	0	390
Total	0	624	2	626	1	0	3	4	1	913	3	917	0	0	0	0	1547
05:00 PM	0	129	0	129	1	0	0	1	0	238	0	238	0	0	1	1	369
05:15 PM	0	148	0	148	0	0	0	0	0	213	1	214	1	0	0	1	363
05:30 PM	0	172	0	172	1	0	0	1	1	212	1	214	1	0	0	1	388
05:45 PM	0	146	0	146	0	0	0	0	0	190	0	190	0	0	1	1	337
Total	0	595	0	595	2	0	0	2	1	853	2	856	2	0	2	4	1457
Grand Total	0	1219	2	1221	3	0	3	6	2	1766	5	1773	2	0	2	4	3004
Apprch %	0	99.8	0.2		50	0	50		0.1	99.6	0.3		50	0	50		
Total %	0	40.6	0.1	40.6	0.1	0	0.1	0.2	0.1	58.8	0.2	59	0.1	0	0.1	0.1	

	Winchester Road (SR-79) Southbound				Keller Road Westbound				Winchester Road (SR-79) Northbound				Keller Road Eastbound				
Start Time	Left	Thru	Right	App. Total	Left	Thru	Right	App. Total	Left	Thru	Right	App. Total	Left	Thru	Right	App. Total	Int. Total
Peak Hour Analysis From 04:00 PM to 05:45 PM - Peak 1 of 1																	
Peak Hour for Entire Intersection Begins at 04:00 PM																	
04:00 PM	0	157	**2**	159	0	0	0	0	**1**	**248**	0	**249**	0	0	0	0	**408**
04:15 PM	0	145	0	145	0	0	0	0	0	220	**3**	223	0	0	0	0	368
04:30 PM	0	**174**	0	**174**	0	0	0	0	0	207	0	207	0	0	0	0	381
04:45 PM	0	148	0	148	**1**	0	**3**	**4**	0	238	0	238	0	0	0	0	390
Total Volume	0	624	2	626	1	0	3	4	1	913	3	917	0	0	0	0	1547
% App. Total	0	99.7	0.3		25	0	75		0.1	99.6	0.3		0	0	0		
PHF	.000	.897	.250	.899	.250	.000	.250	.250	.250	.920	.250	.921	.000	.000	.000	.000	.948

Counts Unlimited Inc.
25286 Jaclyn Avenue
Moreno Valley, CA 92557
951-485-7934

County of Riverside
N/S: Winchester Road (SR-79)
E/W: Keller Road
Weather: Sunny

File Name : CRVWIKEPM
Site Code : 9311063
Start Date : 12/9/2009
Page No : 2

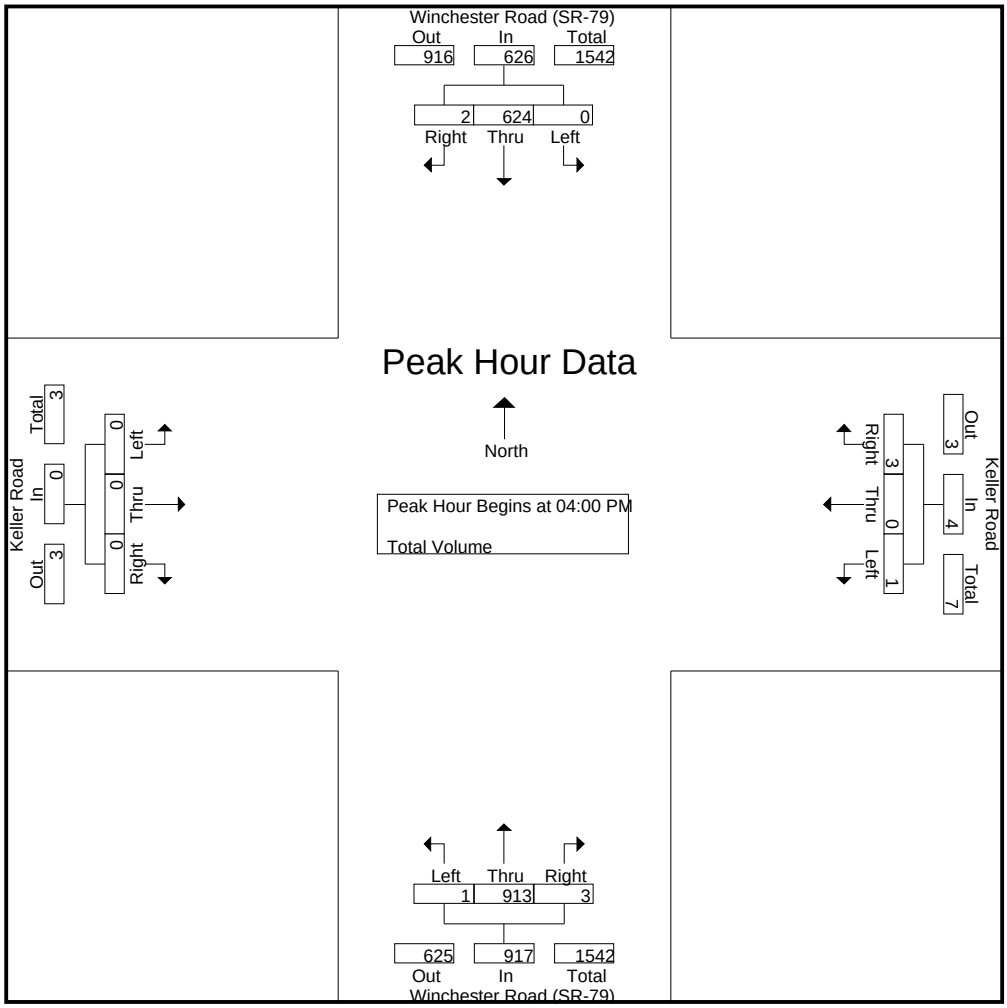

Peak Hour Analysis From 04:00 PM to 05:45 PM - Peak 1 of 1

Peak Hour for Each Approach Begins at:

	04:00 PM				04:45 PM				04:00 PM				05:00 PM			
+0 mins.	0	157	**2**	159	**1**	0	**3**	**4**	**1**	**248**	0	**249**	0	0	**1**	**1**
+15 mins.	0	145	0	145	1	0	0	1	0	220	**3**	223	**1**	0	0	1
+30 mins.	0	**174**	0	**174**	0	0	0	0	0	207	0	207	1	0	0	1
+45 mins.	0	148	0	148	1	0	0	1	0	238	0	238	0	0	1	1
Total Volume	0	624	2	626	3	0	3	6	1	913	3	917	2	0	2	4
% App. Total	0	99.7	0.3		50	0	50		0.1	99.6	0.3		50	0	50	
PHF	.000	.897	.250	.899	.750	.000	.250	.375	.250	.920	.250	.921	.500	.000	.500	1.000

Counts Unlimited Inc.
25286 Jaclyn Avenue
Moreno Valley, CA 92557
951-485-7934

County of Riverside
N/S: Winchester Road/SR-79
E/W: Jean Nichiolas Rd/Skyview Rd
Weather: Sunny

File Name : CRVWIJNAM
Site Code : 9311035
Start Date : 12/9/2009
Page No : 1

Groups Printed- Total Volume

	Winchester Road (SR-79) Southbound				Skyview Road (Closed) Westbound				Winchester Road (SR-79) Northbound				Jean Nicholas Road Eastbound				
Start Time	Left	Thru	Right	App. Total	Left	Thru	Right	App. Total	Left	Thru	Right	App. Total	Left	Thru	Right	App. Total	Int. Total
07:00 AM	0	199	9	208	0	0	0	0	9	110	0	119	4	0	4	8	335
07:15 AM	0	232	13	245	0	0	0	0	9	126	0	135	11	0	9	20	400
07:30 AM	0	269	5	274	0	0	0	0	7	111	0	118	2	0	3	5	397
07:45 AM	0	217	3	220	0	0	0	0	10	111	0	121	5	0	9	14	355
Total	0	917	30	947	0	0	0	0	35	458	0	493	22	0	25	47	1487
08:00 AM	0	235	14	249	0	0	0	0	22	126	0	148	8	0	8	16	413
08:15 AM	0	236	11	247	0	0	0	0	27	92	0	119	4	0	6	10	376
08:30 AM	0	212	6	218	0	0	0	0	7	112	0	119	7	0	7	14	351
08:45 AM	0	191	1	192	0	0	0	0	11	122	0	133	3	0	1	4	329
Total	0	874	32	906	0	0	0	0	67	452	0	519	22	0	22	44	1469
Grand Total	0	1791	62	1853	0	0	0	0	102	910	0	1012	44	0	47	91	2956
Apprch %	0	96.7	3.3		0	0	0		10.1	89.9	0		48.4	0	51.6		
Total %	0	60.6	2.1	62.7	0	0	0	0	3.5	30.8	0	34.2	1.5	0	1.6	3.1	

	Winchester Road (SR-79) Southbound				Skyview Road (Closed) Westbound				Winchester Road (SR-79) Northbound				Jean Nicholas Road Eastbound				
Start Time	Left	Thru	Right	App. Total	Left	Thru	Right	App. Total	Left	Thru	Right	App. Total	Left	Thru	Right	App. Total	Int. Total
Peak Hour Analysis From 07:00 AM to 08:45 AM - Peak 1 of 1																	
Peak Hour for Entire Intersection Begins at 07:15 AM																	
07:15 AM	0	232	13	245	0	0	0	0	9	**126**	0	135	**11**	0	**9**	**20**	400
07:30 AM	0	**269**	5	**274**	0	0	0	0	7	111	0	118	2	0	3	5	397
07:45 AM	0	217	3	220	0	0	0	0	10	111	0	121	5	0	9	14	355
08:00 AM	0	235	**14**	249	0	0	0	0	**22**	126	0	**148**	8	0	8	16	**413**
Total Volume	0	953	35	988	0	0	0	0	48	474	0	522	26	0	29	55	1565
% App. Total	0	96.5	3.5		0	0	0		9.2	90.8	0		47.3	0	52.7		
PHF	.000	.886	.625	.901	.000	.000	.000	.000	.545	.940	.000	.882	.591	.000	.806	.688	.947

Counts Unlimited Inc.
25286 Jaclyn Avenue
Moreno Valley, CA 92557
951-485-7934

County of Riverside
N/S: Winchester Road/SR-79
E/W: Jean Nichiolas Rd/Skyview Rd
Weather: Sunny

File Name : CRVWIJNAM
Site Code : 9311035
Start Date : 12/9/2009
Page No : 2

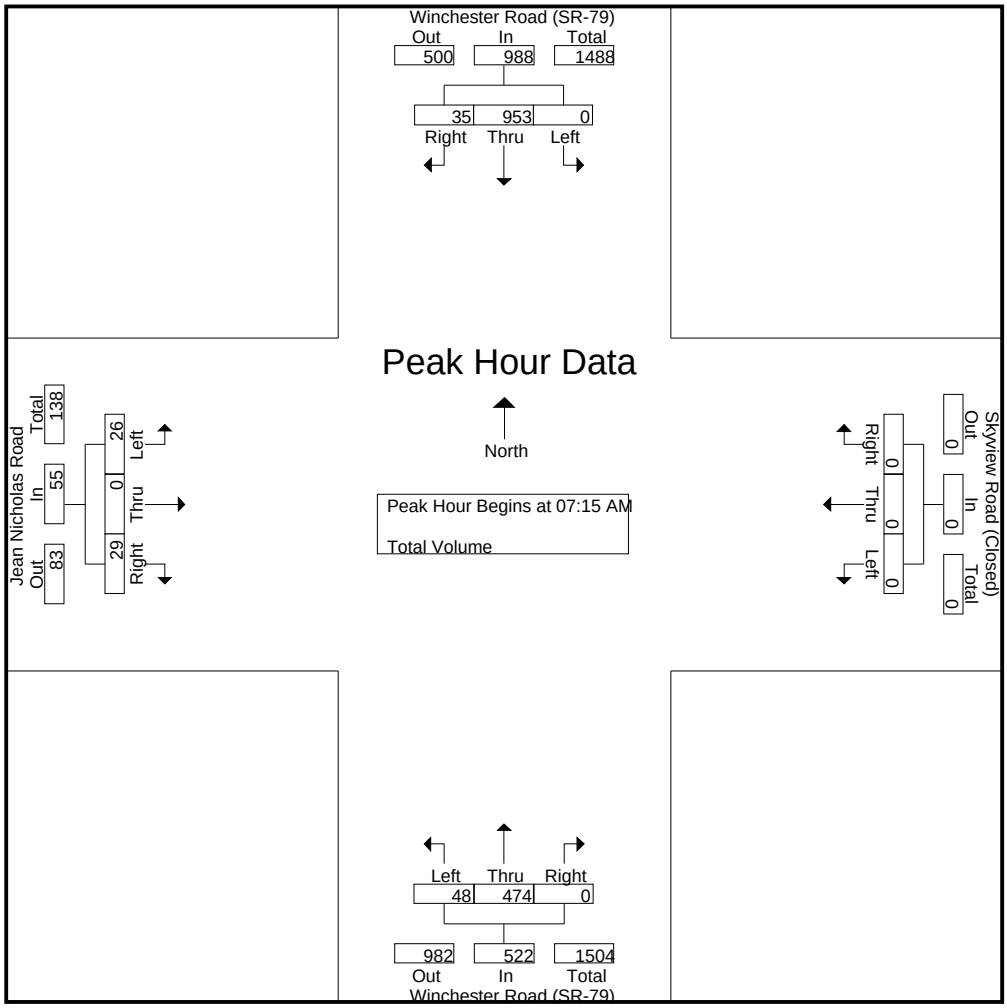

Peak Hour Analysis From 07:00 AM to 08:45 AM - Peak 1 of 1

Peak Hour for Each Approach Begins at:

	07:30 AM				07:00 AM				07:15 AM				07:15 AM			
+0 mins.	0	**269**	5	**274**	0	0	0	0	9	**126**	0	135	**11**	0	**9**	**20**
+15 mins.	0	217	3	220	0	0	0	0	7	111	0	118	2	0	3	5
+30 mins.	0	235	**14**	249	0	0	0	0	10	111	0	121	5	0	9	14
+45 mins.	0	236	11	247	0	0	0	0	**22**	126	0	**148**	8	0	8	16
Total Volume	0	957	33	990	0	0	0	0	48	474	0	522	26	0	29	55
% App. Total	0	96.7	3.3		0	0	0		9.2	90.8	0		47.3	0	52.7	
PHF	.000	.889	.589	.903	.000	.000	.000	.000	.545	.940	.000	.882	.591	.000	.806	.688

Counts Unlimited Inc.
25286 Jaclyn Avenue
Moreno Valley, CA 92557
951-485-7934

County of Riverside
N/S: Winchester Road/SR-79
E/W: Jean Nichiolas Rd/Skyview Rd
Weather: Sunny

File Name : CRVWIJNPM
Site Code : 9311035
Start Date : 12/9/2009
Page No : 1

Groups Printed- Total Volume

	Winchester Road (SR-79) Southbound				Skyview Road (Closed) Westbound				Winchester Road (SR-79) Northbound				Jean Nicholas Road Eastbound				
Start Time	Left	Thru	Right	App. Total	Left	Thru	Right	App. Total	Left	Thru	Right	App. Total	Left	Thru	Right	App. Total	Int. Total
04:00 PM	0	159	7	166	0	0	0	0	15	281	0	296	3	0	8	11	473
04:15 PM	0	168	2	170	0	0	0	0	12	248	0	260	7	0	5	12	442
04:30 PM	0	194	7	201	0	0	0	0	16	242	0	258	6	0	11	17	476
04:45 PM	0	148	6	154	1	0	1	2	10	308	2	320	7	0	4	11	487
Total	0	669	22	691	1	0	1	2	53	1079	2	1134	23	0	28	51	1878
05:00 PM	2	144	8	154	0	0	2	2	15	276	0	291	8	0	8	16	463
05:15 PM	0	166	1	167	0	0	0	0	18	271	0	289	5	0	4	9	465
05:30 PM	0	174	3	177	0	0	0	0	35	265	0	300	5	0	6	11	488
05:45 PM	1	160	3	164	1	0	0	1	18	290	0	308	5	0	3	8	481
Total	3	644	15	662	1	0	2	3	86	1102	0	1188	23	0	21	44	1897
Grand Total	3	1313	37	1353	2	0	3	5	139	2181	2	2322	46	0	49	95	3775
Apprch %	0.2	97	2.7		40	0	60		6	93.9	0.1		48.4	0	51.6		
Total %	0.1	34.8	1	35.8	0.1	0	0.1	0.1	3.7	57.8	0.1	61.5	1.2	0	1.3	2.5	

	Winchester Road (SR-79) Southbound				Skyview Road (Closed) Westbound				Winchester Road (SR-79) Northbound				Jean Nicholas Road Eastbound				
Start Time	Left	Thru	Right	App. Total	Left	Thru	Right	App. Total	Left	Thru	Right	App. Total	Left	Thru	Right	App. Total	Int. Total
Peak Hour Analysis From 04:00 PM to 05:45 PM - Peak 1 of 1																	
Peak Hour for Entire Intersection Begins at 04:45 PM																	
04:45 PM	0	148	6	154	**1**	0	1	**2**	10	**308**	**2**	**320**	7	0	4	11	487
05:00 PM	**2**	144	**8**	154	0	0	**2**	2	15	276	0	291	**8**	0	**8**	**16**	463
05:15 PM	0	166	1	167	0	0	0	0	18	271	0	289	5	0	4	9	465
05:30 PM	0	**174**	3	**177**	0	0	0	0	**35**	265	0	300	5	0	6	11	**488**
Total Volume	2	632	18	652	1	0	3	4	78	1120	2	1200	25	0	22	47	1903
% App. Total	0.3	96.9	2.8		25	0	75		6.5	93.3	0.2		53.2	0	46.8		
PHF	.250	.908	.563	.921	.250	.000	.375	.500	.557	.909	.250	.938	.781	.000	.688	.734	.975

Counts Unlimited Inc.
25286 Jaclyn Avenue
Moreno Valley, CA 92557
951-485-7934

County of Riverside
N/S: Winchester Road/SR-79
E/W: Jean Nichiolas Rd/Skyview Rd
Weather: Sunny

File Name : CRVWIJNPM
Site Code : 9311035
Start Date : 12/9/2009
Page No : 2

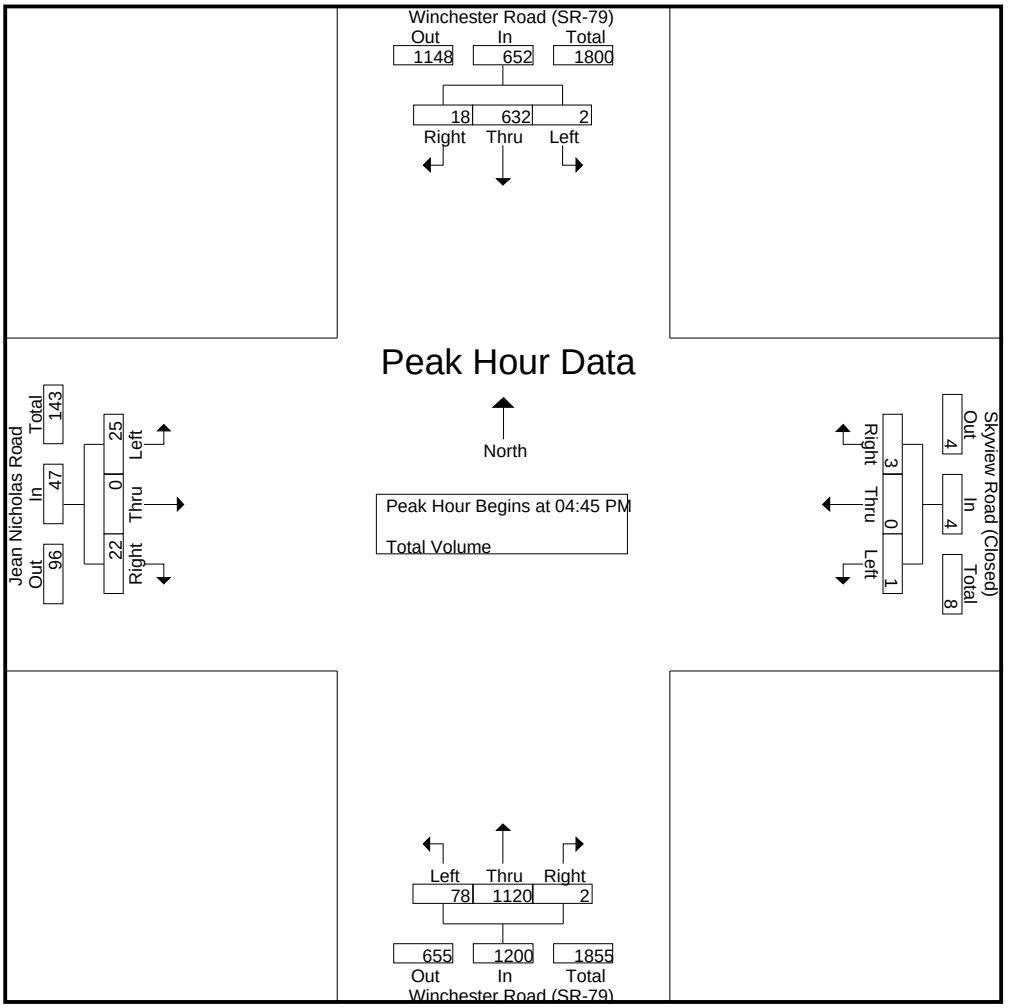

Peak Hour Analysis From 04:00 PM to 05:45 PM - Peak 1 of 1

Peak Hour for Each Approach Begins at:

	04:00 PM				04:15 PM				04:45 PM				04:15 PM			
+0 mins.	0	159	**7**	166	0	0	0	0	10	**308**	**2**	**320**	7	0	5	12
+15 mins.	0	168	2	170	0	0	0	0	15	276	0	291	6	0	**11**	**17**
+30 mins.	0	**194**	7	**201**	**1**	0	1	**2**	18	271	0	289	7	0	4	11
+45 mins.	0	148	6	154	0	0	**2**	2	**35**	265	0	300	**8**	0	8	16
Total Volume	0	669	22	691	1	0	3	4	78	1120	2	1200	28	0	28	56
% App. Total	0	96.8	3.2		25	0	75		6.5	93.3	0.2		50	0	50	
PHF	.000	.862	.786	.859	.250	.000	.375	.500	.557	.909	.250	.938	.875	.000	.636	.824

Counts Unlimited Inc.
25286 Jaclyn Avenue
Moreno Valley, CA 92557
951-485-7934

County of Riverside
N/S: Winchester Road (SR-79)
E/W: Benton Road
Weather: Sunny

File Name : CRVWIBEAM
Site Code : 9311066
Start Date : 12/9/2009
Page No : 1

Groups Printed- Total Volume

	Winchester Road Southbound			Benton Road Westbound			Winchester Road Northbound			
Start Time	Left	Thru	App. Total	Left	Right	App. Total	Thru	Right	App. Total	Int. Total
07:00 AM	42	228	270	87	27	114	148	41	189	573
07:15 AM	50	294	344	96	31	127	165	53	218	689
07:30 AM	40	354	394	96	51	147	167	49	216	757
07:45 AM	55	283	338	87	48	135	191	33	224	697
Total	187	1159	1346	366	157	523	671	176	847	2716
08:00 AM	47	372	419	85	43	128	229	54	283	830
08:15 AM	57	394	451	76	45	121	175	41	216	788
08:30 AM	66	345	411	81	48	129	141	51	192	732
08:45 AM	50	260	310	121	47	168	130	46	176	654
Total	220	1371	1591	363	183	546	675	192	867	3004
Grand Total	407	2530	2937	729	340	1069	1346	368	1714	5720
Apprch %	13.9	86.1		68.2	31.8		78.5	21.5		
Total %	7.1	44.2	51.3	12.7	5.9	18.7	23.5	6.4	30	

	Winchester Road Southbound			Benton Road Westbound			Winchester Road Northbound			
Start Time	Left	Thru	App. Total	Left	Right	App. Total	Thru	Right	App. Total	Int. Total
Peak Hour Analysis From 07:00 AM to 08:45 AM - Peak 1 of 1										
Peak Hour for Entire Intersection Begins at 07:30 AM										
07:30 AM	40	354	394	**96**	**51**	**147**	167	49	216	757
07:45 AM	55	283	338	87	48	135	191	33	224	697
08:00 AM	47	372	419	85	43	128	**229**	**54**	**283**	**830**
08:15 AM	**57**	**394**	**451**	76	45	121	175	41	216	788
Total Volume	199	1403	1602	344	187	531	762	177	939	3072
% App. Total	12.4	87.6		64.8	35.2		81.2	18.8		
PHF	.873	.890	.888	.896	.917	.903	.832	.819	.830	.925

Counts Unlimited Inc.
25286 Jaclyn Avenue
Moreno Valley, CA 92557
951-485-7934

County of Riverside
N/S: Winchester Road (SR-79)
E/W: Benton Road
Weather: Sunny

File Name : CRVWIBEAM
Site Code : 9311066
Start Date : 12/9/2009
Page No : 2

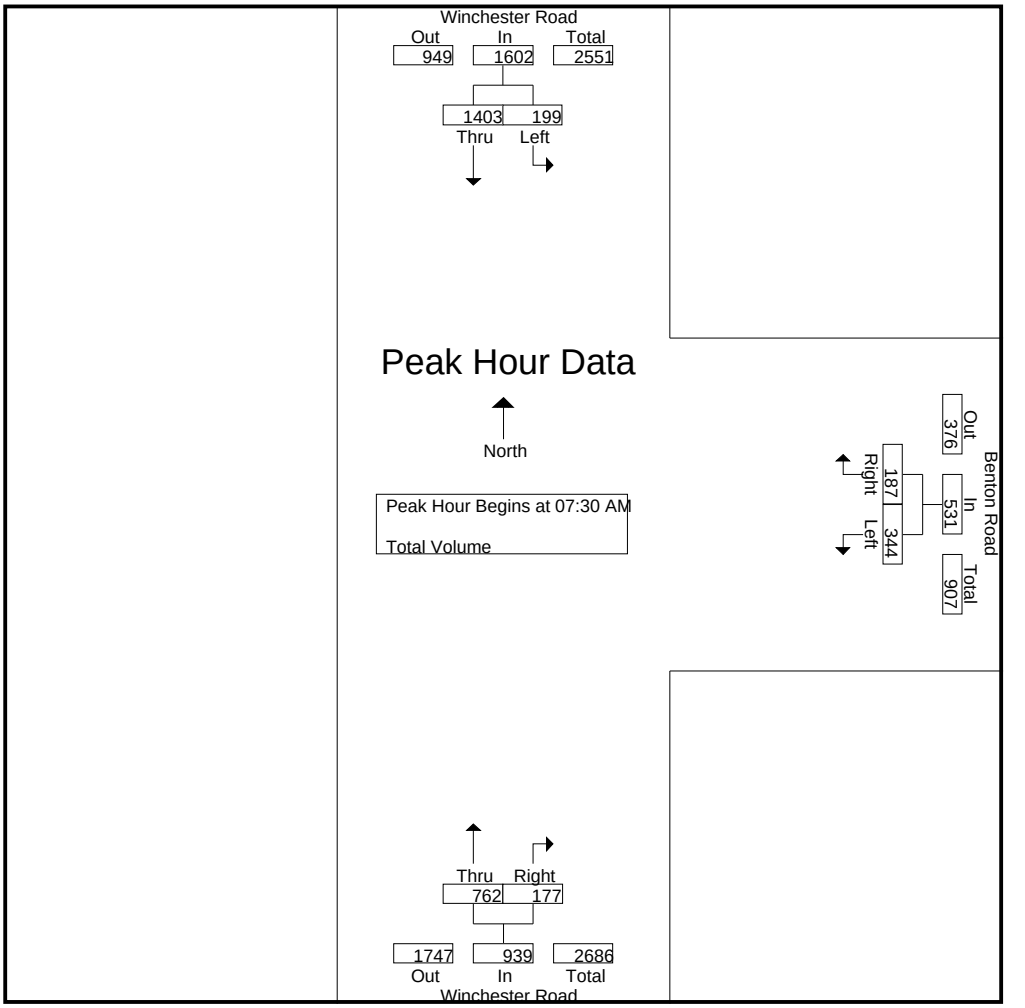

Peak Hour Analysis From 07:00 AM to 08:45 AM - Peak 1 of 1

Peak Hour for Each Approach Begins at:

	07:45 AM			08:00 AM			07:15 AM		
+0 mins.	55	283	338	85	43	128	165	53	218
+15 mins.	47	372	419	76	45	121	167	49	216
+30 mins.	57	**394**	**451**	81	**48**	129	191	33	224
+45 mins.	**66**	345	411	**121**	47	**168**	**229**	**54**	**283**
Total Volume	225	1394	1619	363	183	546	752	189	941
% App. Total	13.9	86.1		66.5	33.5		79.9	20.1	
PHF	.852	.885	.897	.750	.953	.813	.821	.875	.831

Counts Unlimited Inc.
25286 Jaclyn Avenue
Moreno Valley, CA 92557
951-485-7934

County of Riverside
N/S: Winchester Road (SR-79)
E/W: Benton Road
Weather: Sunny

File Name : CRVWIBEPM
Site Code : 9311066
Start Date : 12/9/2009
Page No : 1

Groups Printed- Total Volume

	Winchester Road Southbound			Benton Road Westbound			Winchester Road Northbound			
Start Time	Left	Thru	App. Total	Left	Right	App. Total	Thru	Right	App. Total	Int. Total
04:00 PM	61	195	256	62	64	126	329	74	403	785
04:15 PM	37	199	236	73	84	157	327	101	428	821
04:30 PM	50	236	286	51	74	125	347	117	464	875
04:45 PM	70	205	275	79	68	147	371	117	488	910
Total	218	835	1053	265	290	555	1374	409	1783	3391
05:00 PM	59	203	262	92	82	174	365	80	445	881
05:15 PM	65	197	262	70	95	165	381	111	492	919
05:30 PM	64	211	275	61	84	145	422	133	555	975
05:45 PM	48	206	254	67	95	162	353	134	487	903
Total	236	817	1053	290	356	646	1521	458	1979	3678
Grand Total	454	1652	2106	555	646	1201	2895	867	3762	7069
Apprch %	21.6	78.4		46.2	53.8		77	23		
Total %	6.4	23.4	29.8	7.9	9.1	17	41	12.3	53.2	

	Winchester Road Southbound			Benton Road Westbound			Winchester Road Northbound			
Start Time	Left	Thru	App. Total	Left	Right	App. Total	Thru	Right	App. Total	Int. Total
Peak Hour Analysis From 04:00 PM to 05:45 PM - Peak 1 of 1										
Peak Hour for Entire Intersection Begins at 04:45 PM										
04:45 PM	**70**	205	**275**	79	68	147	371	117	488	910
05:00 PM	59	203	262	**92**	82	**174**	365	80	445	881
05:15 PM	65	197	262	70	**95**	165	381	111	492	919
05:30 PM	64	**211**	275	61	84	145	**422**	**133**	**555**	**975**
Total Volume	258	816	1074	302	329	631	1539	441	1980	3685
% App. Total	24	76		47.9	52.1		77.7	22.3		
PHF	.921	.967	.976	.821	.866	.907	.912	.829	.892	.945

Counts Unlimited Inc.
25286 Jaclyn Avenue
Moreno Valley, CA 92557
951-485-7934

County of Riverside
N/S: Winchester Road (SR-79)
E/W: Benton Road
Weather: Sunny

File Name : CRVWIBEPM
Site Code : 9311066
Start Date : 12/9/2009
Page No : 2

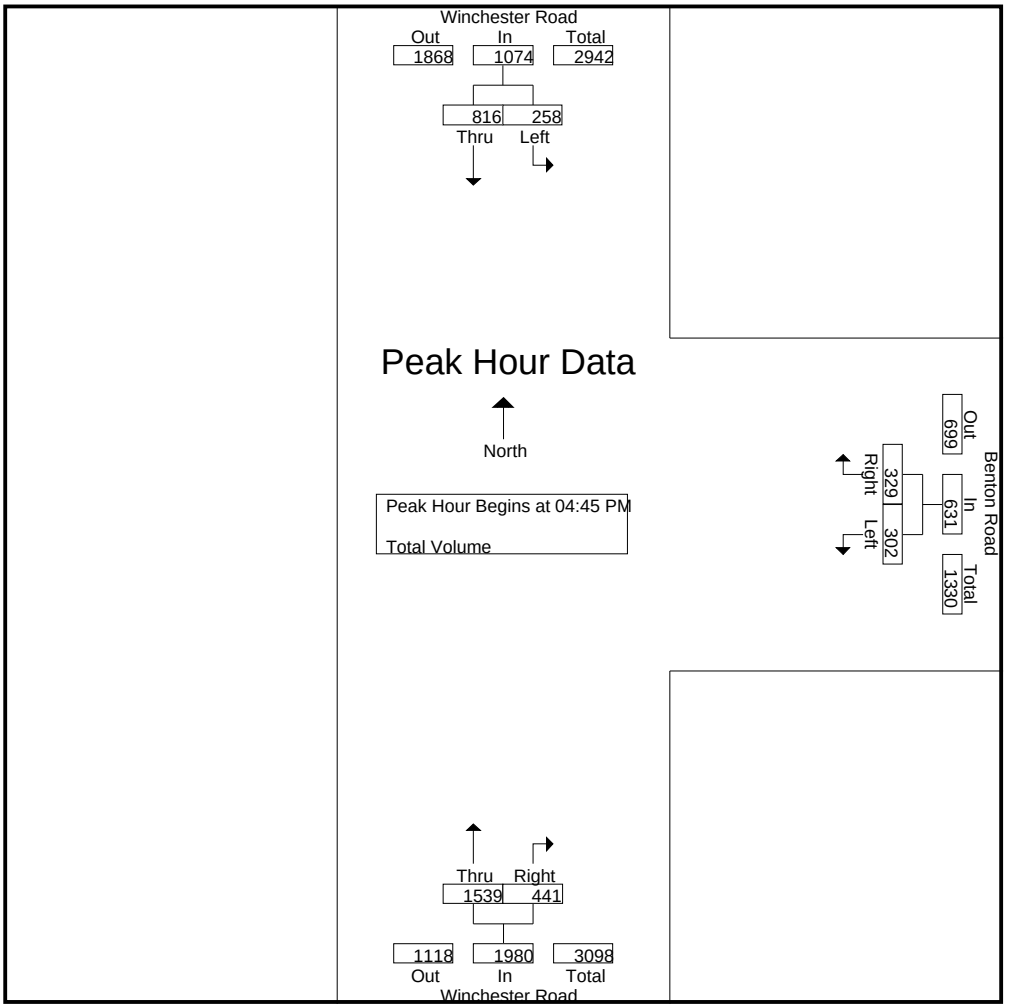

Peak Hour Analysis From 04:00 PM to 05:45 PM - Peak 1 of 1

Peak Hour for Each Approach Begins at:

	04:30 PM			05:00 PM			04:45 PM		
+0 mins.	50	**236**	**286**	**92**	82	**174**	371	117	488
+15 mins.	**70**	205	275	70	**95**	165	365	80	445
+30 mins.	59	203	262	61	84	145	381	111	492
+45 mins.	65	197	262	67	95	162	**422**	**133**	**555**
Total Volume	244	841	1085	290	356	646	1539	441	1980
% App. Total	22.5	77.5		44.9	55.1		77.7	22.3	
PHF	.871	.891	.948	.788	.937	.928	.912	.829	.892

Counts Unlimited Inc.
25286 Jaclyn Avenue
Moreno Valley, CA 92557
951-485-7934

County of Riverside
N/S: Leon Road
E/W: Scott Road
Weather: Sunny

File Name : CRVLESCAM
Site Code : 9311044
Start Date : 12/9/2009
Page No : 1

Groups Printed- Total Volume

	Leon Road Southbound				Scott Road Westbound				Leon Road Northbound				Scott Road Eastbound				
Start Time	Left	Thru	Right	App. Total	Left	Thru	Right	App. Total	Left	Thru	Right	App. Total	Left	Thru	Right	App. Total	Int. Total
07:00 AM	1	16	2	19	3	50	0	53	51	4	0	55	0	52	31	83	210
07:15 AM	1	4	4	9	2	60	3	65	46	5	0	51	3	49	61	113	238
07:30 AM	0	2	5	7	1	53	0	54	71	1	2	74	0	54	56	110	245
07:45 AM	3	8	4	15	5	47	0	52	61	6	2	69	1	47	59	107	243
Total	5	30	15	50	11	210	3	224	229	16	4	249	4	202	207	413	936
08:00 AM	0	5	2	7	3	50	0	53	46	2	2	50	0	45	64	109	219
08:15 AM	1	1	0	2	2	50	2	54	47	3	2	52	6	37	45	88	196
08:30 AM	0	3	1	4	2	43	1	46	43	2	1	46	1	39	35	75	171
08:45 AM	0	0	3	3	2	41	0	43	29	1	1	31	0	35	47	82	159
Total	1	9	6	16	9	184	3	196	165	8	6	179	7	156	191	354	745
Grand Total	6	39	21	66	20	394	6	420	394	24	10	428	11	358	398	767	1681
Apprch %	9.1	59.1	31.8		4.8	93.8	1.4		92.1	5.6	2.3		1.4	46.7	51.9		
Total %	0.4	2.3	1.2	3.9	1.2	23.4	0.4	25	23.4	1.4	0.6	25.5	0.7	21.3	23.7	45.6	

	Leon Road Southbound				Scott Road Westbound				Leon Road Northbound				Scott Road Eastbound				
Start Time	Left	Thru	Right	App. Total	Left	Thru	Right	App. Total	Left	Thru	Right	App. Total	Left	Thru	Right	App. Total	Int. Total
Peak Hour Analysis From 07:00 AM to 08:45 AM - Peak 1 of 1																	
Peak Hour for Entire Intersection Begins at 07:15 AM																	
07:15 AM	1	4	4	9	2	**60**	**3**	**65**	46	5	0	51	**3**	49	61	**113**	238
07:30 AM	0	2	**5**	7	1	53	0	54	**71**	1	**2**	**74**	0	**54**	56	110	**245**
07:45 AM	**3**	**8**	4	**15**	**5**	47	0	52	61	**6**	2	69	1	47	59	107	243
08:00 AM	0	5	2	7	3	50	0	53	46	2	2	50	0	45	**64**	109	219
Total Volume	4	19	15	38	11	210	3	224	224	14	6	244	4	195	240	439	945
% App. Total	10.5	50	39.5		4.9	93.8	1.3		91.8	5.7	2.5		0.9	44.4	54.7		
PHF	.333	.594	.750	.633	.550	.875	.250	.862	.789	.583	.750	.824	.333	.903	.938	.971	.964

Counts Unlimited Inc.
25286 Jaclyn Avenue
Moreno Valley, CA 92557
951-485-7934

County of Riverside
N/S: Leon Road
E/W: Scott Road
Weather: Sunny

File Name : CRVLESCAM
Site Code : 9311044
Start Date : 12/9/2009
Page No : 2

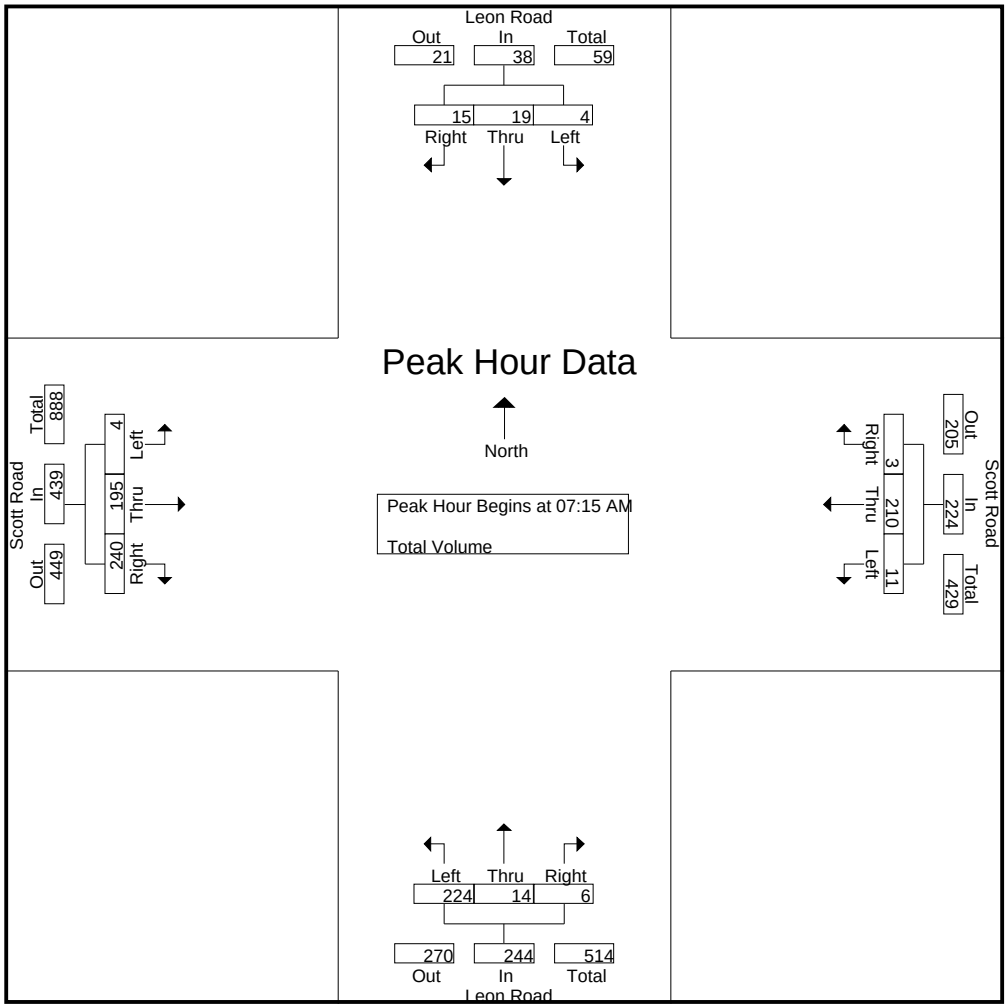

Peak Hour Analysis From 07:00 AM to 08:45 AM - Peak 1 of 1

Peak Hour for Each Approach Begins at:

	07:00 AM				07:00 AM				07:00 AM				07:15 AM			
+0 mins.	1	**16**	2	**19**	3	50	0	53	51	4	0	55	**3**	49	61	**113**
+15 mins.	1	4	4	9	2	**60**	**3**	**65**	46	5	0	51	0	**54**	56	110
+30 mins.	0	2	**5**	7	1	53	0	54	**71**	1	**2**	**74**	1	47	59	107
+45 mins.	**3**	8	4	15	**5**	47	0	52	61	**6**	2	69	0	45	**64**	109
Total Volume	5	30	15	50	11	210	3	224	229	16	4	249	4	195	240	439
% App. Total	10	60	30		4.9	93.8	1.3		92	6.4	1.6		0.9	44.4	54.7	
PHF	.417	.469	.750	.658	.550	.875	.250	.862	.806	.667	.500	.841	.333	.903	.938	.971

Counts Unlimited Inc.
25286 Jaclyn Avenue
Moreno Valley, CA 92557
951-485-7934

County of Riverside
N/S: Leon Road
E/W: Scott Road
Weather: Sunny

File Name : CRVLESCPM
Site Code : 9311044
Start Date : 12/9/2009
Page No : 1

Groups Printed- Total Volume

	Leon Road Southbound				Scott Road Westbound				Leon Road Northbound				Scott Road Eastbound				
Start Time	Left	Thru	Right	App. Total	Left	Thru	Right	App. Total	Left	Thru	Right	App. Total	Left	Thru	Right	App. Total	Int. Total
04:00 PM	0	4	2	6	0	49	2	51	56	5	3	64	2	45	48	95	216
04:15 PM	0	2	5	7	4	53	1	58	71	2	1	74	6	40	56	102	241
04:30 PM	2	1	0	3	1	53	1	55	66	1	2	69	3	57	56	116	243
04:45 PM	0	5	3	8	2	51	1	54	65	3	2	70	1	45	60	106	238
Total	2	12	10	24	7	206	5	218	258	11	8	277	12	187	220	419	938
05:00 PM	0	4	2	6	0	45	0	45	69	3	2	74	2	37	68	107	232
05:15 PM	0	0	2	2	3	55	3	61	77	5	9	91	1	42	77	120	274
05:30 PM	1	0	3	4	3	53	1	57	52	1	4	57	3	60	49	112	230
05:45 PM	0	1	3	4	1	40	0	41	57	4	7	68	0	47	55	102	215
Total	1	5	10	16	7	193	4	204	255	13	22	290	6	186	249	441	951
Grand Total	3	17	20	40	14	399	9	422	513	24	30	567	18	373	469	860	1889
Apprch %	7.5	42.5	50		3.3	94.5	2.1		90.5	4.2	5.3		2.1	43.4	54.5		
Total %	0.2	0.9	1.1	2.1	0.7	21.1	0.5	22.3	27.2	1.3	1.6	30	1	19.7	24.8	45.5	

	Leon Road Southbound				Scott Road Westbound				Leon Road Northbound				Scott Road Eastbound				
Start Time	Left	Thru	Right	App. Total	Left	Thru	Right	App. Total	Left	Thru	Right	App. Total	Left	Thru	Right	App. Total	Int. Total
Peak Hour Analysis From 04:00 PM to 05:45 PM - Peak 1 of 1																	
Peak Hour for Entire Intersection Begins at 04:30 PM																	
04:30 PM	**2**	1	0	3	1	53	1	55	66	1	2	69	**3**	**57**	56	116	243
04:45 PM	0	**5**	**3**	**8**	2	51	1	54	65	3	2	70	1	45	60	106	238
05:00 PM	0	4	2	6	0	45	0	45	69	3	2	74	2	37	68	107	232
05:15 PM	0	0	2	2	**3**	**55**	**3**	**61**	**77**	**5**	**9**	**91**	1	42	**77**	**120**	**274**
Total Volume	2	10	7	19	6	204	5	215	277	12	15	304	7	181	261	449	987
% App. Total	10.5	52.6	36.8		2.8	94.9	2.3		91.1	3.9	4.9		1.6	40.3	58.1		
PHF	.250	.500	.583	.594	.500	.927	.417	.881	.899	.600	.417	.835	.583	.794	.847	.935	.901

Counts Unlimited Inc.
25286 Jaclyn Avenue
Moreno Valley, CA 92557
951-485-7934

County of Riverside
N/S: Leon Road
E/W: Scott Road
Weather: Sunny

File Name : CRVLESCPM
Site Code : 9311044
Start Date : 12/9/2009
Page No : 2

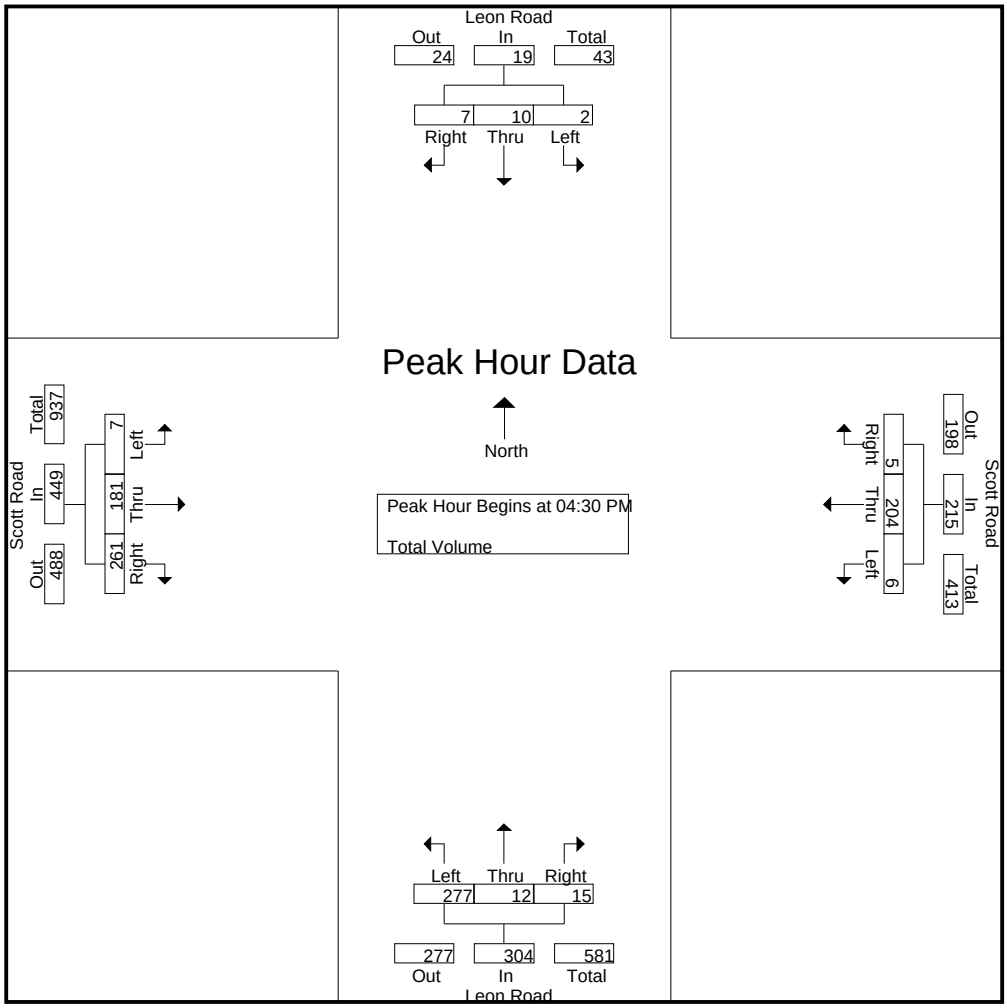

Peak Hour Analysis From 04:00 PM to 05:45 PM - Peak 1 of 1

Peak Hour for Each Approach Begins at:

	04:00 PM				04:00 PM				04:30 PM				04:30 PM			
+0 mins.	0	4	2	6	0	49	**2**	51	66	1	2	69	**3**	**57**	56	116
+15 mins.	0	2	**5**	7	**4**	**53**	1	**58**	65	3	2	70	1	45	60	106
+30 mins.	**2**	1	0	3	1	53	1	55	69	3	2	74	2	37	68	107
+45 mins.	0	**5**	3	**8**	2	51	1	54	**77**	**5**	**9**	**91**	1	42	**77**	**120**
Total Volume	2	12	10	24	7	206	5	218	277	12	15	304	7	181	261	449
% App. Total	8.3	50	41.7		3.2	94.5	2.3		91.1	3.9	4.9		1.6	40.3	58.1	
PHF	.250	.600	.500	.750	.438	.972	.625	.940	.899	.600	.417	.835	.583	.794	.847	.935

Counts Unlimited Inc.
25286 Jaclyn Avenue
Moreno Valley, CA 92557
951-485-7934

County of Riverside
N/S: Leon Road
E/W: Max Gillis Boulevard
Weather: Sunny

File Name : CRVLEMGAM
Site Code : 9311017
Start Date : 12/9/2009
Page No : 1

Groups Printed- Total Volume

	Leon Road Southbound				Max Gillis Boulevard Westbound				Leon Road Northbound				Max Gillis Boulevard Eastbound				
Start Time	Left	Thru	Right	App. Total	Left	Thru	Right	App. Total	Left	Thru	Right	App. Total	Left	Thru	Right	App. Total	Int. Total
07:00 AM	52	16	4	72	46	4	36	86	4	7	25	36	1	3	0	4	198
07:15 AM	45	22	6	73	36	9	36	81	6	17	41	64	1	2	0	3	221
07:30 AM	63	6	6	75	35	23	59	117	11	12	31	54	2	12	3	17	263
07:45 AM	47	12	16	75	21	60	48	129	26	8	32	66	1	22	6	29	299
Total	207	56	32	295	138	96	179	413	47	44	129	220	5	39	9	53	981
08:00 AM	57	6	50	113	22	144	23	189	83	7	25	115	20	112	42	174	591
08:15 AM	50	15	54	119	25	104	37	166	53	11	27	91	33	125	53	211	587
08:30 AM	42	10	7	59	28	37	24	89	11	4	17	32	37	128	45	210	390
08:45 AM	38	11	3	52	33	15	31	79	4	9	29	42	7	24	12	43	216
Total	187	42	114	343	108	300	115	523	151	31	98	280	97	389	152	638	1784
Grand Total	394	98	146	638	246	396	294	936	198	75	227	500	102	428	161	691	2765
Apprch %	61.8	15.4	22.9		26.3	42.3	31.4		39.6	15	45.4		14.8	61.9	23.3		
Total %	14.2	3.5	5.3	23.1	8.9	14.3	10.6	33.9	7.2	2.7	8.2	18.1	3.7	15.5	5.8	25	

	Leon Road Southbound				Max Gillis Boulevard Westbound				Leon Road Northbound				Max Gillis Boulevard Eastbound				
Start Time	Left	Thru	Right	App. Total	Left	Thru	Right	App. Total	Left	Thru	Right	App. Total	Left	Thru	Right	App. Total	Int. Total
Peak Hour Analysis From 07:00 AM to 08:45 AM - Peak 1 of 1																	
Peak Hour for Entire Intersection Begins at 07:45 AM																	
07:45 AM	47	12	16	75	21	60	**48**	129	26	8	**32**	66	1	22	6	29	299
08:00 AM	**57**	6	50	113	22	**144**	23	**189**	**83**	7	25	**115**	20	112	42	174	**591**
08:15 AM	50	**15**	**54**	**119**	25	104	37	166	53	**11**	27	91	33	125	**53**	**211**	587
08:30 AM	42	10	7	59	**28**	37	24	89	11	4	17	32	**37**	**128**	45	210	390
Total Volume	196	43	127	366	96	345	132	573	173	30	101	304	91	387	146	624	1867
% App. Total	53.6	11.7	34.7		16.8	60.2	23		56.9	9.9	33.2		14.6	62	23.4		
PHF	.860	.717	.588	.769	.857	.599	.688	.758	.521	.682	.789	.661	.615	.756	.689	.739	.790

Counts Unlimited Inc.
25286 Jaclyn Avenue
Moreno Valley, CA 92557
951-485-7934

County of Riverside
N/S: Leon Road
E/W: Max Gillis Boulevard
Weather: Sunny

File Name : CRVLEMGAM
Site Code : 9311017
Start Date : 12/9/2009
Page No : 2

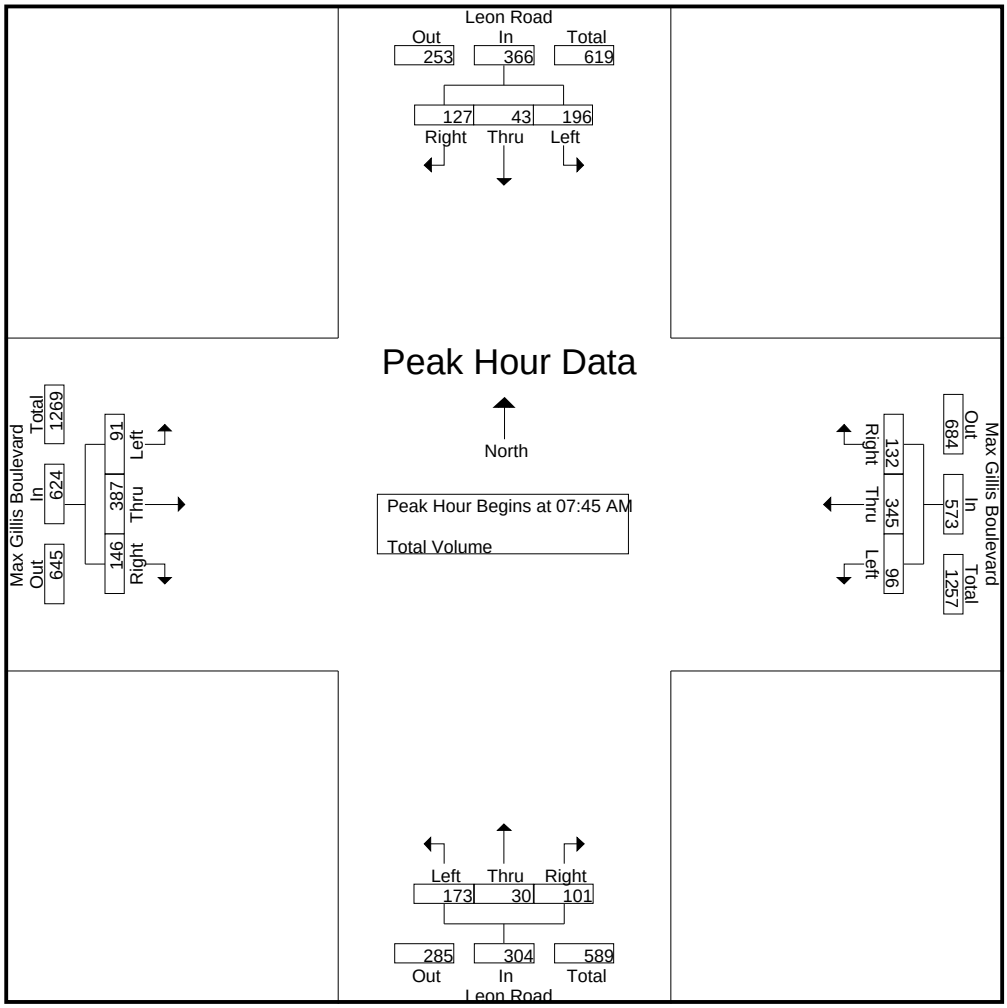

Peak Hour Analysis From 07:00 AM to 08:45 AM - Peak 1 of 1

Peak Hour for Each Approach Begins at:

	07:30 AM				07:30 AM				07:30 AM				08:00 AM			
+0 mins.	**63**	6	6	75	**35**	23	**59**	117	11	**12**	31	54	20	112	42	174
+15 mins.	47	12	16	75	21	60	48	129	26	8	**32**	66	33	125	**53**	**211**
+30 mins.	57	6	50	113	22	**144**	23	**189**	**83**	7	25	**115**	**37**	**128**	45	210
+45 mins.	50	**15**	**54**	**119**	25	104	37	166	53	11	27	91	7	24	12	43
Total Volume	217	39	126	382	103	331	167	601	173	38	115	326	97	389	152	638
% App. Total	56.8	10.2	33		17.1	55.1	27.8		53.1	11.7	35.3		15.2	61	23.8	
PHF	.861	.650	.583	.803	.736	.575	.708	.795	.521	.792	.898	.709	.655	.760	.717	.756

Counts Unlimited Inc.
25286 Jaclyn Avenue
Moreno Valley, CA 92557
951-485-7934

County of Riverside
N/S: Leon Road
E/W: Max Gillis Boulevard
Weather: Sunny

File Name : CRVLEMGPM
Site Code : 9311017
Start Date : 12/9/2009
Page No : 1

Groups Printed- Total Volume

	Leon Road Southbound				Max Gillis Boulevard Westbound				Leon Road Northbound				Max Gillis Boulevard Eastbound				
Start Time	Left	Thru	Right	App. Total	Left	Thru	Right	App. Total	Left	Thru	Right	App. Total	Left	Thru	Right	App. Total	Int. Total
04:00 PM	47	3	0	50	20	14	67	101	2	20	31	53	0	13	6	19	223
04:15 PM	42	9	1	52	30	8	75	113	4	11	34	49	4	9	7	20	234
04:30 PM	46	7	3	56	23	5	70	98	2	12	36	50	2	15	3	20	224
04:45 PM	60	7	4	71	26	17	50	93	12	17	44	73	1	11	3	15	252
Total	195	26	8	229	99	44	262	405	20	60	145	225	7	48	19	74	933
05:00 PM	48	4	9	61	22	31	57	110	7	13	40	60	5	25	14	44	275
05:15 PM	56	4	20	80	19	50	53	122	27	19	49	95	8	13	2	23	320
05:30 PM	46	6	7	59	28	72	48	148	28	15	43	86	4	16	5	25	318
05:45 PM	47	8	3	58	29	63	54	146	22	15	36	73	1	16	4	21	298
Total	197	22	39	258	98	216	212	526	84	62	168	314	18	70	25	113	1211
Grand Total	392	48	47	487	197	260	474	931	104	122	313	539	25	118	44	187	2144
Apprch %	80.5	9.9	9.7		21.2	27.9	50.9		19.3	22.6	58.1		13.4	63.1	23.5		
Total %	18.3	2.2	2.2	22.7	9.2	12.1	22.1	43.4	4.9	5.7	14.6	25.1	1.2	5.5	2.1	8.7	

	Leon Road Southbound				Max Gillis Boulevard Westbound				Leon Road Northbound				Max Gillis Boulevard Eastbound				
Start Time	Left	Thru	Right	App. Total	Left	Thru	Right	App. Total	Left	Thru	Right	App. Total	Left	Thru	Right	App. Total	Int. Total
Peak Hour Analysis From 04:00 PM to 05:45 PM - Peak 1 of 1																	
Peak Hour for Entire Intersection Begins at 05:00 PM																	
05:00 PM	48	4	9	61	22	31	**57**	110	7	13	40	60	5	**25**	**14**	**44**	275
05:15 PM	**56**	4	**20**	**80**	19	50	53	122	27	**19**	**49**	**95**	**8**	13	2	23	**320**
05:30 PM	46	6	7	59	28	**72**	48	**148**	**28**	15	43	86	4	16	5	25	318
05:45 PM	47	**8**	3	58	**29**	63	54	146	22	15	36	73	1	16	4	21	298
Total Volume	197	22	39	258	98	216	212	526	84	62	168	314	18	70	25	113	1211
% App. Total	76.4	8.5	15.1		18.6	41.1	40.3		26.8	19.7	53.5		15.9	61.9	22.1		
PHF	.879	.688	.488	.806	.845	.750	.930	.889	.750	.816	.857	.826	.563	.700	.446	.642	.946

Counts Unlimited Inc.
25286 Jaclyn Avenue
Moreno Valley, CA 92557
951-485-7934

County of Riverside
N/S: Leon Road
E/W: Max Gillis Boulevard
Weather: Sunny

File Name : CRVLEMGPM
Site Code : 9311017
Start Date : 12/9/2009
Page No : 2

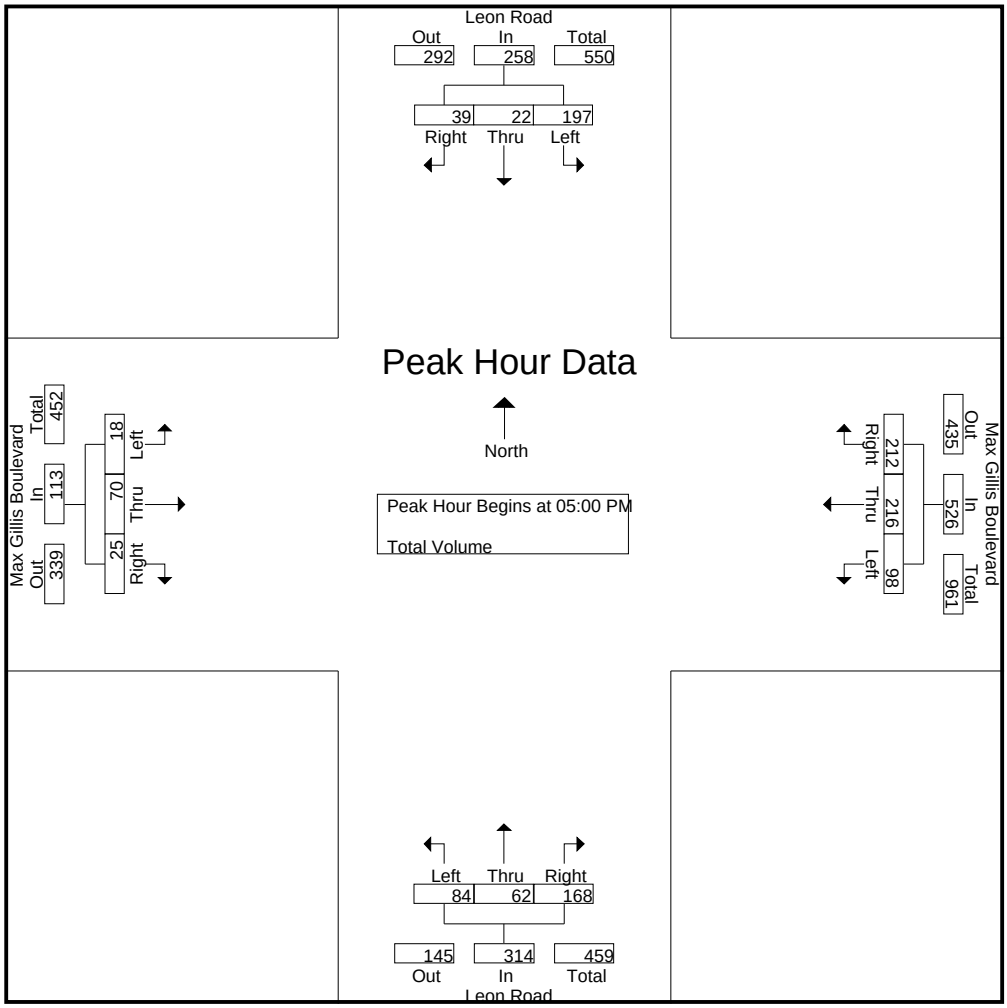

Peak Hour Analysis From 04:00 PM to 05:45 PM - Peak 1 of 1

Peak Hour for Each Approach Begins at:

	04:45 PM				05:00 PM				04:45 PM				05:00 PM			
+0 mins.	**60**	**7**	4	71	22	31	**57**	110	12	17	44	73	5	**25**	**14**	**44**
+15 mins.	48	4	9	61	19	50	53	122	7	13	40	60	**8**	13	2	23
+30 mins.	56	4	**20**	**80**	28	**72**	48	**148**	27	**19**	**49**	**95**	4	16	5	25
+45 mins.	46	6	7	59	**29**	63	54	146	**28**	15	43	86	1	16	4	21
Total Volume	210	21	40	271	98	216	212	526	74	64	176	314	18	70	25	113
% App. Total	77.5	7.7	14.8		18.6	41.1	40.3		23.6	20.4	56.1		15.9	61.9	22.1	
PHF	.875	.750	.500	.847	.845	.750	.930	.889	.661	.842	.898	.826	.563	.700	.446	.642

Counts Unlimited Inc.
25286 Jaclyn Avenue
Moreno Valley, CA 92557
951-485-7934

County of Riverside
N/S: Leon Road
E/W: Keller Road
Weather: Sunny

File Name : CRVLEKEAM
Site Code : 9311058
Start Date : 12/9/2009
Page No : 1

Groups Printed- Total Volume

	Leon Road Southbound				Keller Road Westbound				Leon Road Northbound				Keller Road Eastbound				
Start Time	Left	Thru	Right	App. Total	Left	Thru	Right	App. Total	Left	Thru	Right	App. Total	Left	Thru	Right	App. Total	Int. Total
07:00 AM	1	54	0	55	0	0	2	2	0	65	0	65	0	0	0	0	122
07:15 AM	1	62	0	63	0	1	2	3	0	50	0	50	0	0	0	0	116
07:30 AM	0	68	0	68	1	0	1	2	0	78	0	78	0	0	0	0	148
07:45 AM	2	60	0	62	0	0	1	1	0	45	0	45	0	0	0	0	108
Total	4	244	0	248	1	1	6	8	0	238	0	238	0	0	0	0	494
08:00 AM	0	59	0	59	1	0	1	2	0	43	0	43	1	0	0	1	105
08:15 AM	0	51	0	51	0	0	0	0	0	45	0	45	0	0	0	0	96
08:30 AM	0	45	0	45	2	1	1	4	0	39	0	39	0	0	0	0	88
08:45 AM	0	33	0	33	0	0	0	0	0	29	0	29	0	0	0	0	62
Total	0	188	0	188	3	1	2	6	0	156	0	156	1	0	0	1	351
Grand Total	4	432	0	436	4	2	8	14	0	394	0	394	1	0	0	1	845
Apprch %	0.9	99.1	0		28.6	14.3	57.1		0	100	0		100	0	0		
Total %	0.5	51.1	0	51.6	0.5	0.2	0.9	1.7	0	46.6	0	46.6	0.1	0	0	0.1	

	Leon Road Southbound				Keller Road Westbound				Leon Road Northbound				Keller Road Eastbound				
Start Time	Left	Thru	Right	App. Total	Left	Thru	Right	App. Total	Left	Thru	Right	App. Total	Left	Thru	Right	App. Total	Int. Total
Peak Hour Analysis From 07:00 AM to 08:45 AM - Peak 1 of 1																	
Peak Hour for Entire Intersection Begins at 07:00 AM																	
07:00 AM	1	54	0	55	0	0	**2**	2	0	65	0	65	0	0	0	0	122
07:15 AM	1	62	0	63	0	**1**	2	**3**	0	50	0	50	0	0	0	0	116
07:30 AM	0	**68**	0	**68**	**1**	0	1	2	0	**78**	0	**78**	0	0	0	0	**148**
07:45 AM	**2**	60	0	62	0	0	1	1	0	45	0	45	0	0	0	0	108
Total Volume	4	244	0	248	1	1	6	8	0	238	0	238	0	0	0	0	494
% App. Total	1.6	98.4	0		12.5	12.5	75		0	100	0		0	0	0		
PHF	.500	.897	.000	.912	.250	.250	.750	.667	.000	.763	.000	.763	.000	.000	.000	.000	.834

Counts Unlimited Inc.
25286 Jaclyn Avenue
Moreno Valley, CA 92557
951-485-7934

County of Riverside
N/S: Leon Road
E/W: Keller Road
Weather: Sunny

File Name : CRVLEKEAM
Site Code : 9311058
Start Date : 12/9/2009
Page No : 2

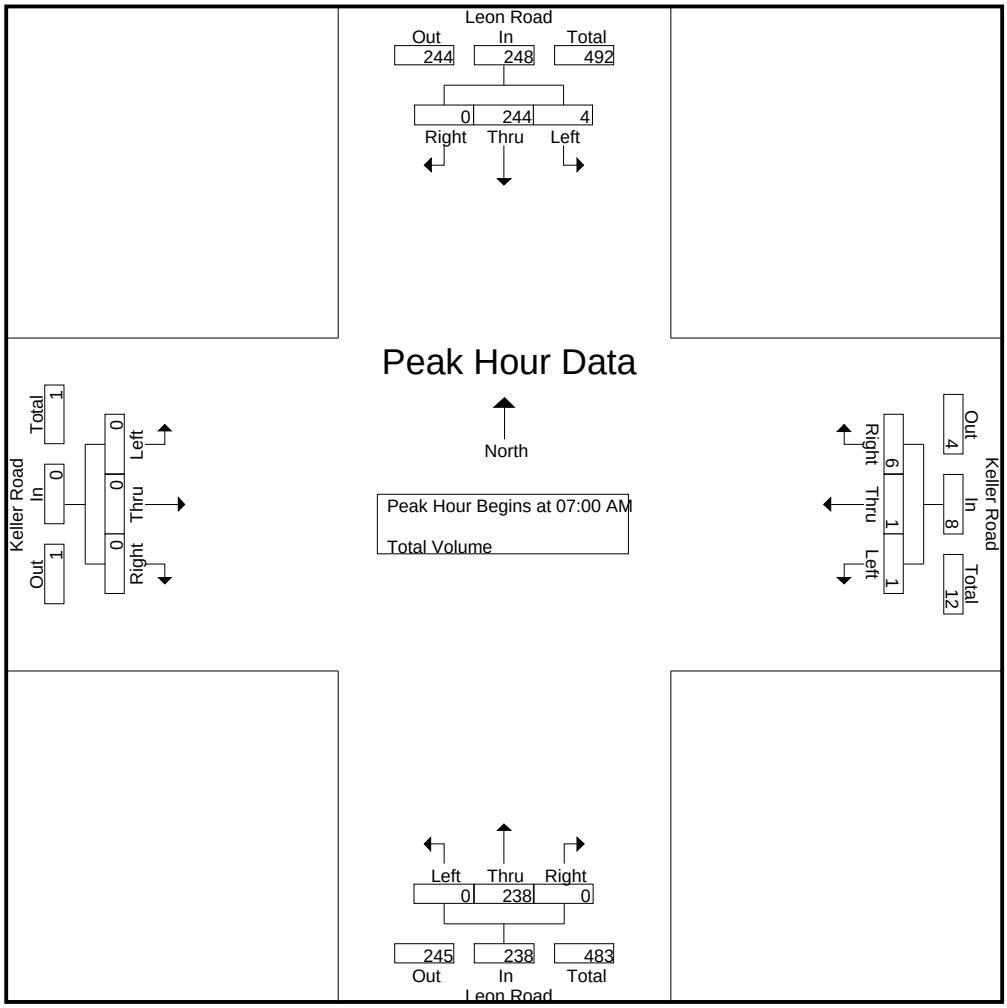

Peak Hour Analysis From 07:00 AM to 08:45 AM - Peak 1 of 1

Peak Hour for Each Approach Begins at:

	07:15 AM				07:00 AM				07:00 AM				07:15 AM			
+0 mins.	1	62	0	63	0	0	**2**	2	0	65	0	65	0	0	0	0
+15 mins.	0	**68**	0	**68**	0	**1**	2	**3**	0	50	0	50	0	0	0	0
+30 mins.	**2**	60	0	62	**1**	0	1	2	0	**78**	0	**78**	0	0	0	0
+45 mins.	0	59	0	59	0	0	1	1	0	45	0	45	**1**	0	0	**1**
Total Volume	3	249	0	252	1	1	6	8	0	238	0	238	1	0	0	1
% App. Total	1.2	98.8	0		12.5	12.5	75		0	100	0		100	0	0	
PHF	.375	.915	.000	.926	.250	.250	.750	.667	.000	.763	.000	.763	.250	.000	.000	.250

Counts Unlimited Inc.
25286 Jaclyn Avenue
Moreno Valley, CA 92557
951-485-7934

County of Riverside
N/S: Leon Road
E/W: Keller Road
Weather: Sunny

File Name : CRVLEKEPM
Site Code : 9311058
Start Date : 12/9/2009
Page No : 1

Groups Printed- Total Volume

	Leon Road Southbound				Keller Road Westbound				Leon Road Northbound				Keller Road Eastbound				
Start Time	Left	Thru	Right	App. Total	Left	Thru	Right	App. Total	Left	Thru	Right	App. Total	Left	Thru	Right	App. Total	Int. Total
04:00 PM	4	50	0	54	0	0	1	1	6	63	2	71	0	1	0	1	127
04:15 PM	3	54	0	57	2	0	4	6	0	66	0	66	0	0	0	0	129
04:30 PM	2	46	0	48	2	0	0	2	0	69	1	70	0	0	0	0	120
04:45 PM	2	67	0	69	1	0	2	3	0	57	1	58	0	0	0	0	130
Total	11	217	0	228	5	0	7	12	6	255	4	265	0	1	0	1	506
05:00 PM	2	60	0	62	1	0	0	1	0	64	1	65	0	0	1	1	129
05:15 PM	1	67	0	68	1	0	1	2	1	68	1	70	0	0	0	0	140
05:30 PM	5	44	0	49	0	0	0	0	0	52	0	52	0	0	0	0	101
05:45 PM	0	50	0	50	0	0	0	0	1	52	0	53	0	0	0	0	103
Total	8	221	0	229	2	0	1	3	2	236	2	240	0	0	1	1	473
Grand Total	19	438	0	457	7	0	8	15	8	491	6	505	0	1	1	2	979
Apprch %	4.2	95.8	0		46.7	0	53.3		1.6	97.2	1.2		0	50	50		
Total %	1.9	44.7	0	46.7	0.7	0	0.8	1.5	0.8	50.2	0.6	51.6	0	0.1	0.1	0.2	

	Leon Road Southbound				Keller Road Westbound				Leon Road Northbound				Keller Road Eastbound				
Start Time	Left	Thru	Right	App. Total	Left	Thru	Right	App. Total	Left	Thru	Right	App. Total	Left	Thru	Right	App. Total	Int. Total
Peak Hour Analysis From 04:00 PM to 05:45 PM - Peak 1 of 1																	
Peak Hour for Entire Intersection Begins at 04:30 PM																	
04:30 PM	**2**	46	0	48	**2**	0	0	2	0	**69**	**1**	**70**	0	0	0	0	120
04:45 PM	2	**67**	0	**69**	1	0	**2**	**3**	0	57	1	58	0	0	0	0	130
05:00 PM	2	60	0	62	1	0	0	1	0	64	1	65	0	0	**1**	**1**	129
05:15 PM	1	67	0	68	1	0	1	2	**1**	68	1	70	0	0	0	0	**140**
Total Volume	7	240	0	247	5	0	3	8	1	258	4	263	0	0	1	1	519
% App. Total	2.8	97.2	0		62.5	0	37.5		0.4	98.1	1.5		0	0	100		
PHF	.875	.896	.000	.895	.625	.000	.375	.667	.250	.935	1.000	.939	.000	.000	.250	.250	.927

Counts Unlimited Inc.
25286 Jaclyn Avenue
Moreno Valley, CA 92557
951-485-7934

County of Riverside
N/S: Leon Road
E/W: Keller Road
Weather: Sunny

File Name : CRVLEKEPM
Site Code : 9311058
Start Date : 12/9/2009
Page No : 2

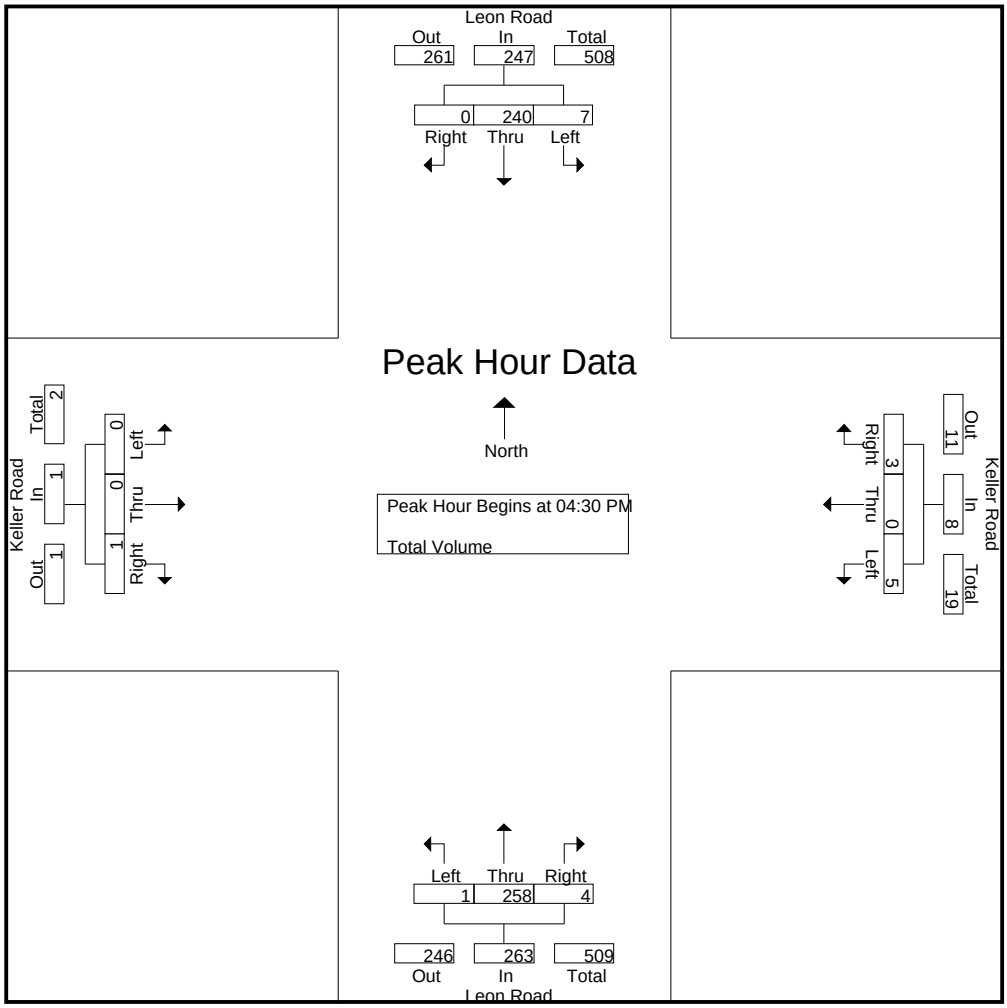

Peak Hour Analysis From 04:00 PM to 05:45 PM - Peak 1 of 1

Peak Hour for Each Approach Begins at:

	04:45 PM				04:00 PM				04:00 PM				04:00 PM			
+0 mins.	2	**67**	0	**69**	0	0	1	1	**6**	63	**2**	**71**	0	**1**	0	**1**
+15 mins.	2	60	0	62	**2**	0	**4**	**6**	0	66	0	66	0	0	0	0
+30 mins.	1	67	0	68	2	0	0	2	0	**69**	1	70	0	0	0	0
+45 mins.	**5**	44	0	49	1	0	2	3	0	57	1	58	0	0	0	0
Total Volume	10	238	0	248	5	0	7	12	6	255	4	265	0	1	0	1
% App. Total	4	96	0		41.7	0	58.3		2.3	96.2	1.5		0	100	0	
PHF	.500	.888	.000	.899	.625	.000	.438	.500	.250	.924	.500	.933	.000	.250	.000	.250

Counts Unlimited Inc.
25286 Jaclyn Avenue
Moreno Valley, CA 92557
951-485-7934

County of Riverside
N/S: Leon Road
E/W: Jean Nicholas Road
Weather: Sunny

File Name : CRVLEJNAM
Site Code : 9311037
Start Date : 12/9/2009
Page No : 1

Groups Printed- Total Volume

	Leon Road Southbound				Jean Nicholas Road Westbound				Leon Road Northbound				Closed Eastbound				
Start Time	Left	Thru	Right	App. Total	Left	Thru	Right	App. Total	Left	Thru	Right	App. Total	Left	Thru	Right	App. Total	Int. Total
07:00 AM	2	53	0	55	2	0	11	13	0	49	4	53	0	0	0	0	121
07:15 AM	2	58	0	60	7	0	9	16	0	42	6	48	0	0	0	0	124
07:30 AM	0	61	0	61	3	0	8	11	0	57	1	58	0	0	0	0	130
07:45 AM	3	60	0	63	4	0	7	11	0	58	3	61	0	0	0	0	135
Total	7	232	0	239	16	0	35	51	0	206	14	220	0	0	0	0	510
08:00 AM	9	54	0	63	8	0	27	35	0	38	7	45	0	0	0	0	143
08:15 AM	4	55	0	59	12	0	29	41	0	55	4	59	0	0	0	0	159
08:30 AM	7	47	0	54	0	0	8	8	0	34	1	35	0	0	0	0	97
08:45 AM	2	45	0	47	2	0	4	6	0	28	2	30	0	0	0	0	83
Total	22	201	0	223	22	0	68	90	0	155	14	169	0	0	0	0	482
Grand Total	29	433	0	462	38	0	103	141	0	361	28	389	0	0	0	0	992
Apprch %	6.3	93.7	0		27	0	73		0	92.8	7.2		0	0	0		
Total %	2.9	43.6	0	46.6	3.8	0	10.4	14.2	0	36.4	2.8	39.2	0	0	0	0	

	Leon Road Southbound				Jean Nicholas Road Westbound				Leon Road Northbound				Closed Eastbound				
Start Time	Left	Thru	Right	App. Total	Left	Thru	Right	App. Total	Left	Thru	Right	App. Total	Left	Thru	Right	App. Total	Int. Total
Peak Hour Analysis From 07:00 AM to 08:45 AM - Peak 1 of 1																	
Peak Hour for Entire Intersection Begins at 07:30 AM																	
07:30 AM	0	**61**	0	61	3	0	8	11	0	57	1	58	0	0	0	0	130
07:45 AM	3	60	0	**63**	4	0	7	11	0	**58**	3	**61**	0	0	0	0	135
08:00 AM	**9**	54	0	63	8	0	27	35	0	38	**7**	45	0	0	0	0	143
08:15 AM	4	55	0	59	**12**	0	**29**	**41**	0	55	4	59	0	0	0	0	**159**
Total Volume	16	230	0	246	27	0	71	98	0	208	15	223	0	0	0	0	567
% App. Total	6.5	93.5	0		27.6	0	72.4		0	93.3	6.7		0	0	0		
PHF	.444	.943	.000	.976	.563	.000	.612	.598	.000	.897	.536	.914	.000	.000	.000	.000	.892

Counts Unlimited Inc.
25286 Jaclyn Avenue
Moreno Valley, CA 92557
951-485-7934

County of Riverside
N/S: Leon Road
E/W: Jean Nicholas Road
Weather: Sunny

File Name : CRVLEJNAM
Site Code : 9311037
Start Date : 12/9/2009
Page No : 2

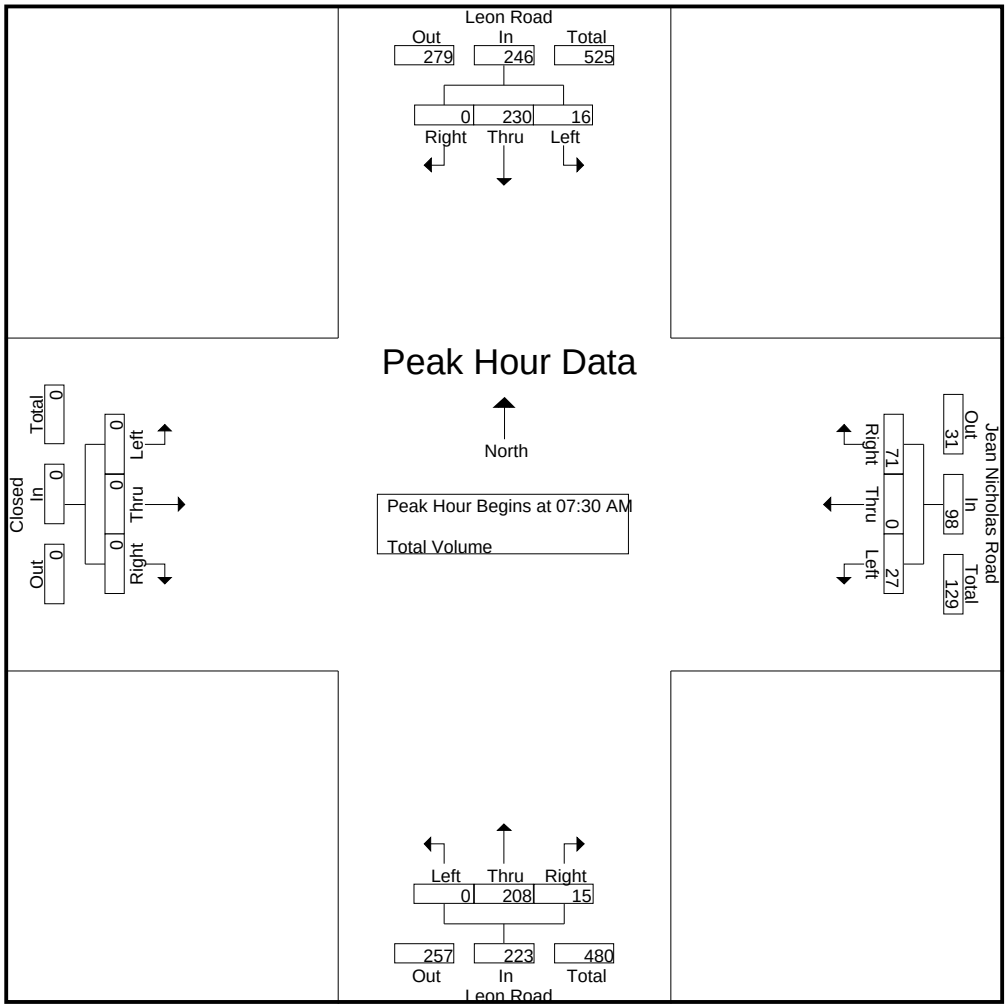

Peak Hour Analysis From 07:00 AM to 08:45 AM - Peak 1 of 1

Peak Hour for Each Approach Begins at:

	07:15 AM				07:30 AM				07:30 AM				07:00 AM			
+0 mins.	2	58	0	60	3	0	8	11	0	57	1	58	0	0	0	0
+15 mins.	0	**61**	0	61	4	0	7	11	0	**58**	3	**61**	0	0	0	0
+30 mins.	3	60	0	**63**	8	0	27	35	0	38	**7**	45	0	0	0	0
+45 mins.	**9**	54	0	63	**12**	0	**29**	**41**	0	55	4	59	0	0	0	0
Total Volume	14	233	0	247	27	0	71	98	0	208	15	223	0	0	0	0
% App. Total	5.7	94.3	0		27.6	0	72.4		0	93.3	6.7		0	0	0	
PHF	.389	.955	.000	.980	.563	.000	.612	.598	.000	.897	.536	.914	.000	.000	.000	.000

Counts Unlimited Inc.
25286 Jaclyn Avenue
Moreno Valley, CA 92557
951-485-7934

County of Riverside
N/S: Leon Road
E/W: Jean Nicholas Road
Weather: Sunny

File Name : CRVLEJNPM
Site Code : 9311037
Start Date : 12/9/2009
Page No : 1

Groups Printed- Total Volume

	Leon Road Southbound				Jean Nicholas Road Westbound				Leon Road Northbound				Closed Eastbound				
Start Time	Left	Thru	Right	App. Total	Left	Thru	Right	App. Total	Left	Thru	Right	App. Total	Left	Thru	Right	App. Total	Int. Total
04:00 PM	5	45	0	50	2	0	4	6	0	62	4	66	0	0	0	0	122
04:15 PM	9	46	0	55	1	0	8	9	0	61	3	64	0	0	0	0	128
04:30 PM	4	39	0	43	2	0	6	8	0	59	4	63	0	0	0	0	114
04:45 PM	6	65	0	71	2	0	6	8	0	52	7	59	0	0	0	0	138
Total	24	195	0	219	7	0	24	31	0	234	18	252	0	0	0	0	502
05:00 PM	9	57	0	66	4	0	11	15	0	58	7	65	0	0	0	0	146
05:15 PM	5	63	0	68	0	0	11	11	0	60	1	61	0	0	0	0	140
05:30 PM	5	47	0	52	3	0	11	14	0	42	5	47	0	0	0	0	113
05:45 PM	4	48	0	52	2	0	9	11	0	47	3	50	0	0	0	0	113
Total	23	215	0	238	9	0	42	51	0	207	16	223	0	0	0	0	512
Grand Total	47	410	0	457	16	0	66	82	0	441	34	475	0	0	0	0	1014
Apprch %	10.3	89.7	0		19.5	0	80.5		0	92.8	7.2		0	0	0		
Total %	4.6	40.4	0	45.1	1.6	0	6.5	8.1	0	43.5	3.4	46.8	0	0	0	0	

	Leon Road Southbound				Jean Nicholas Road Westbound				Leon Road Northbound				Closed Eastbound				
Start Time	Left	Thru	Right	App. Total	Left	Thru	Right	App. Total	Left	Thru	Right	App. Total	Left	Thru	Right	App. Total	Int. Total
Peak Hour Analysis From 04:00 PM to 05:45 PM - Peak 1 of 1																	
Peak Hour for Entire Intersection Begins at 04:30 PM																	
04:30 PM	4	39	0	43	2	0	6	8	0	59	4	63	0	0	0	0	114
04:45 PM	6	**65**	0	**71**	2	0	6	8	0	52	**7**	59	0	0	0	0	138
05:00 PM	**9**	57	0	66	**4**	0	**11**	**15**	0	58	7	**65**	0	0	0	0	**146**
05:15 PM	5	63	0	68	0	0	11	11	0	**60**	1	61	0	0	0	0	140
Total Volume	24	224	0	248	8	0	34	42	0	229	19	248	0	0	0	0	538
% App. Total	9.7	90.3	0		19	0	81		0	92.3	7.7		0	0	0		
PHF	.667	.862	.000	.873	.500	.000	.773	.700	.000	.954	.679	.954	.000	.000	.000	.000	.921

Counts Unlimited Inc.
25286 Jaclyn Avenue
Moreno Valley, CA 92557
951-485-7934

County of Riverside
N/S: Leon Road
E/W: Jean Nicholas Road
Weather: Sunny

File Name : CRVLEJNPM
Site Code : 9311037
Start Date : 12/9/2009
Page No : 2

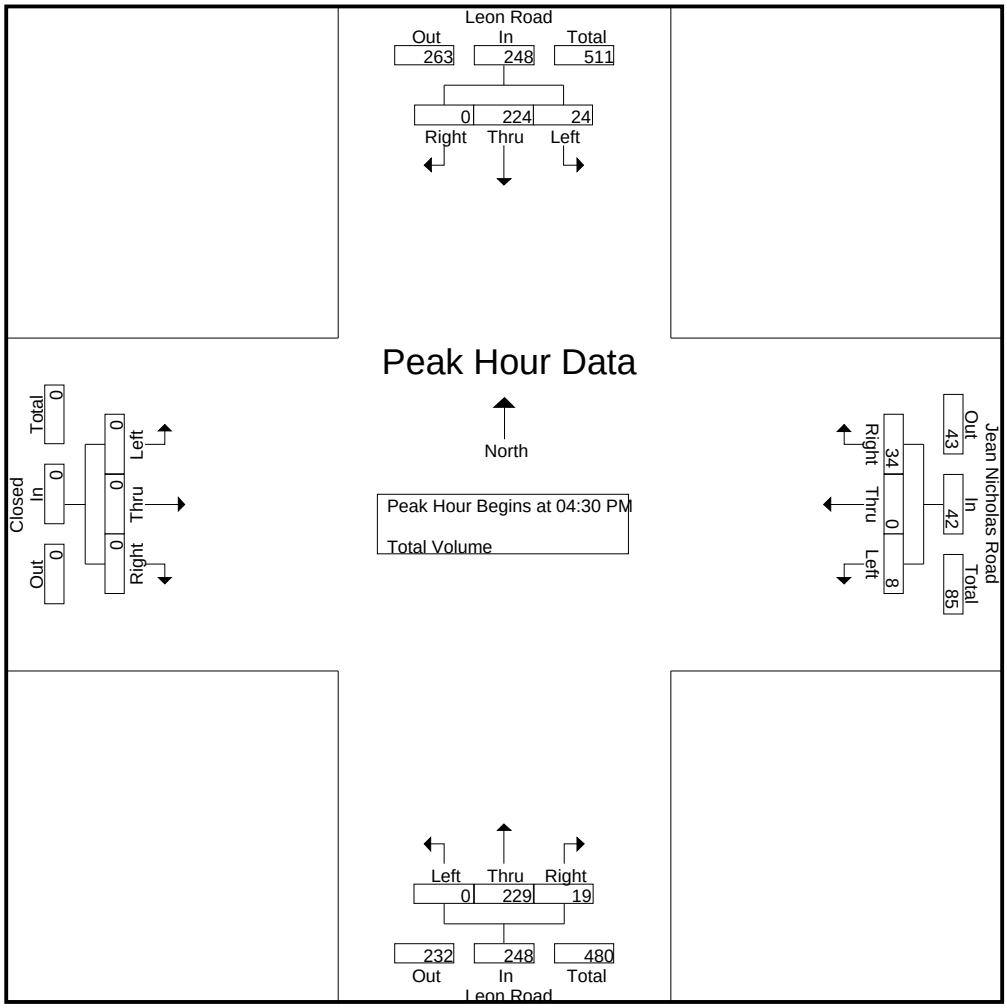

Peak Hour Analysis From 04:00 PM to 05:45 PM - Peak 1 of 1

Peak Hour for Each Approach Begins at:

	04:45 PM				05:00 PM				04:00 PM				04:00 PM			
+0 mins.	6	**65**	0	**71**	**4**	0	**11**	**15**	0	**62**	4	**66**	0	0	0	0
+15 mins.	**9**	57	0	66	0	0	11	11	0	61	3	64	0	0	0	0
+30 mins.	5	63	0	68	3	0	11	14	0	59	4	63	0	0	0	0
+45 mins.	5	47	0	52	2	0	9	11	0	52	**7**	59	0	0	0	0
Total Volume	25	232	0	257	9	0	42	51	0	234	18	252	0	0	0	0
% App. Total	9.7	90.3	0		17.6	0	82.4		0	92.9	7.1		0	0	0	
PHF	.694	.892	.000	.905	.563	.000	.955	.850	.000	.944	.643	.955	.000	.000	.000	.000

Counts Unlimited Inc.
PO Box 1178
Corona, CA 92878
(951) 268-6268

City of Murrieta
N/S: Winchester Road
E/W: Benton Road
Weather: Sunny

File Name : MURWIBEAM
Site Code : 10266044
Start Date : 12/7/2010
Page No : 1

Groups Printed- Class 1

	Winchester Road Southbound			Benton Road Westbound			Winchester Road Northbound			
Start Time	Left	Thru	App. Total	Left	Rght	App. Total	Thru	Rght	App. Total	Int. Total
07:00 AM	35	298	333	93	29	122	118	48	166	621
07:15 AM	45	266	311	64	27	91	171	33	204	606
07:30 AM	46	312	358	90	34	124	165	21	186	668
07:45 AM	56	329	385	67	36	103	245	34	279	767
Total	182	1205	1387	314	126	440	699	136	835	2662
08:00 AM	72	318	390	88	25	113	224	46	270	773
08:15 AM	64	366	430	71	32	103	170	45	215	748
08:30 AM	75	356	431	75	49	124	123	43	166	721
08:45 AM	45	270	315	97	49	146	130	54	184	645
Total	256	1310	1566	331	155	486	647	188	835	2887
Grand Total	438	2515	2953	645	281	926	1346	324	1670	5549
Apprch %	14.8	85.2		69.7	30.3		80.6	19.4		
Total %	7.9	45.3	53.2	11.6	5.1	16.7	24.3	5.8	30.1	

	Winchester Road Southbound			Benton Road Westbound			Winchester Road Northbound			
Start Time	Left	Thru	App. Total	Left	Rght	App. Total	Thru	Rght	App. Total	Int. Total
Peak Hour Analysis From 07:00 AM to 08:45 AM - Peak 1 of 1										
Peak Hour for Entire Intersection Begins at 07:45 AM										
07:45 AM	56	329	385	67	36	103	**245**	34	**279**	767
08:00 AM	72	318	390	**88**	25	113	224	**46**	270	**773**
08:15 AM	64	**366**	430	71	32	103	170	45	215	748
08:30 AM	**75**	356	**431**	75	**49**	**124**	123	43	166	721
Total Volume	267	1369	1636	301	142	443	762	168	930	3009
% App. Total	16.3	83.7		67.9	32.1		81.9	18.1		
PHF	.890	.935	.949	.855	.724	.893	.778	.913	.833	.973

Counts Unlimited Inc.
PO Box 1178
Corona, CA 92878
(951) 268-6268

City of Murrieta
N/S: Winchester Road
E/W: Benton Road
Weather: Sunny

File Name : MURWIBEAM
Site Code : 10266044
Start Date : 12/7/2010
Page No : 2

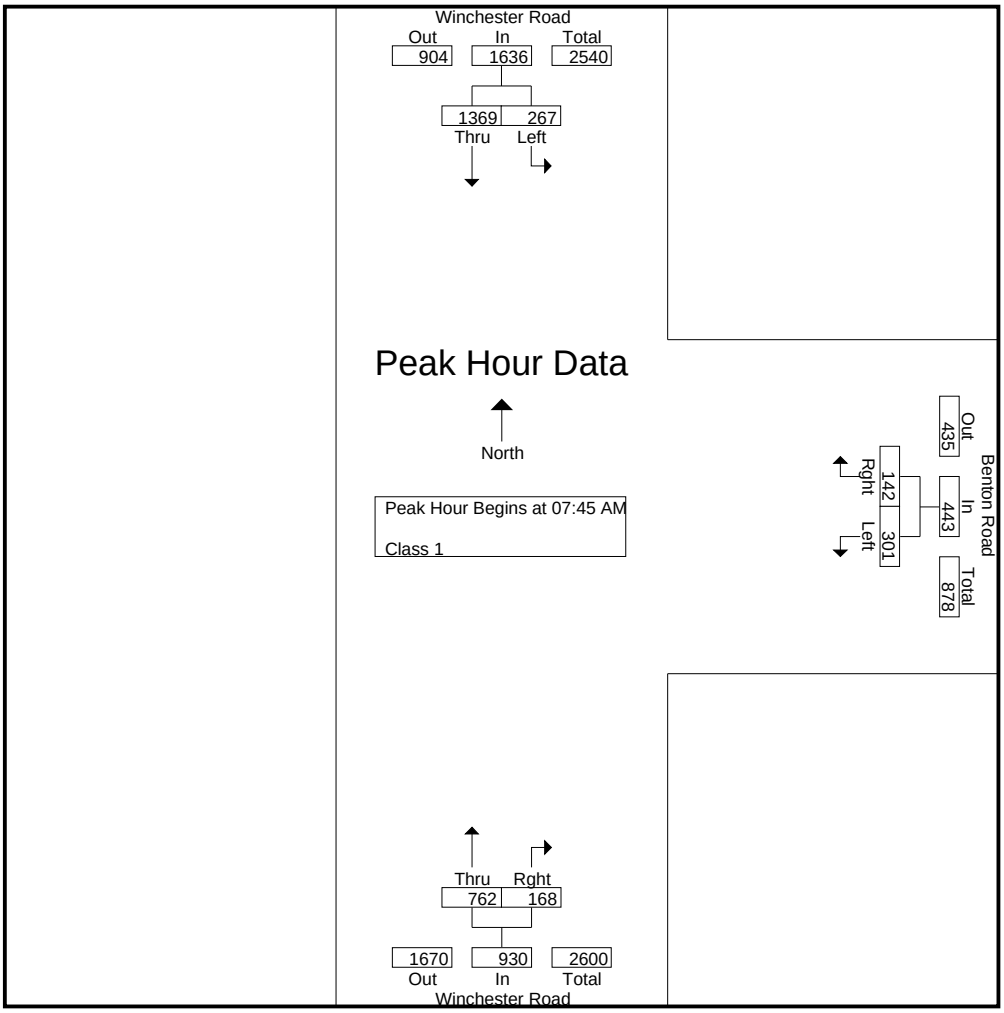

Peak Hour Analysis From 07:00 AM to 08:45 AM - Peak 1 of 1
Peak Hour for Each Approach Begins at:

	07:45 AM			08:00 AM			07:30 AM		
+0 mins.	56	329	385	88	25	113	165	21	186
+15 mins.	72	318	390	71	32	103	**245**	34	**279**
+30 mins.	64	**366**	430	75	**49**	124	224	**46**	270
+45 mins.	**75**	356	**431**	**97**	49	**146**	170	45	215
Total Volume	267	1369	1636	331	155	486	804	146	950
% App. Total	16.3	83.7		68.1	31.9		84.6	15.4	
PHF	.890	.935	.949	.853	.791	.832	.820	.793	.851

Counts Unlimited Inc.
PO Box 1178
Corona, CA 92878
(951) 268-6268

City of Murrieta
N/S: Winchester Road
E/W: Benton Road
Weather: Sunny

File Name : MURWIBEPM
Site Code : 10266044
Start Date : 12/7/2010
Page No : 1

Groups Printed- Class 1

	Winchester Road Southbound			Benton Road Westbound			Winchester Road Northbound			
Start Time	Left	Thru	App. Total	Left	Rght	App. Total	Thru	Rght	App. Total	Int. Total
04:00 PM	46	189	235	44	63	107	265	78	343	685
04:15 PM	39	187	226	66	84	150	312	93	405	781
04:30 PM	59	228	287	56	76	132	349	115	464	883
04:45 PM	47	209	256	65	89	154	350	102	452	862
Total	191	813	1004	231	312	543	1276	388	1664	3211
05:00 PM	49	235	284	60	91	151	369	105	474	909
05:15 PM	67	207	274	76	84	160	382	123	505	939
05:30 PM	60	226	286	72	79	151	393	147	540	977
05:45 PM	79	197	276	72	103	175	353	151	504	955
Total	255	865	1120	280	357	637	1497	526	2023	3780
Grand Total	446	1678	2124	511	669	1180	2773	914	3687	6991
Apprch %	21	79		43.3	56.7		75.2	24.8		
Total %	6.4	24	30.4	7.3	9.6	16.9	39.7	13.1	52.7	

	Winchester Road Southbound			Benton Road Westbound			Winchester Road Northbound			
Start Time	Left	Thru	App. Total	Left	Rght	App. Total	Thru	Rght	App. Total	Int. Total
Peak Hour Analysis From 04:00 PM to 05:45 PM - Peak 1 of 1										
Peak Hour for Entire Intersection Begins at 05:00 PM										
05:00 PM	49	**235**	284	60	91	151	369	105	474	909
05:15 PM	67	207	274	**76**	84	160	382	123	505	939
05:30 PM	60	226	**286**	72	79	151	**393**	147	**540**	**977**
05:45 PM	**79**	197	276	72	**103**	**175**	353	**151**	504	955
Total Volume	255	865	1120	280	357	637	1497	526	2023	3780
% App. Total	22.8	77.2		44	56		74	26		
PHF	.807	.920	.979	.921	.867	.910	.952	.871	.937	.967

Counts Unlimited Inc.
PO Box 1178
Corona, CA 92878
(951) 268-6268

City of Murrieta
N/S: Winchester Road
E/W: Benton Road
Weather: Sunny

File Name : MURWIBEPM
Site Code : 10266044
Start Date : 12/7/2010
Page No : 2

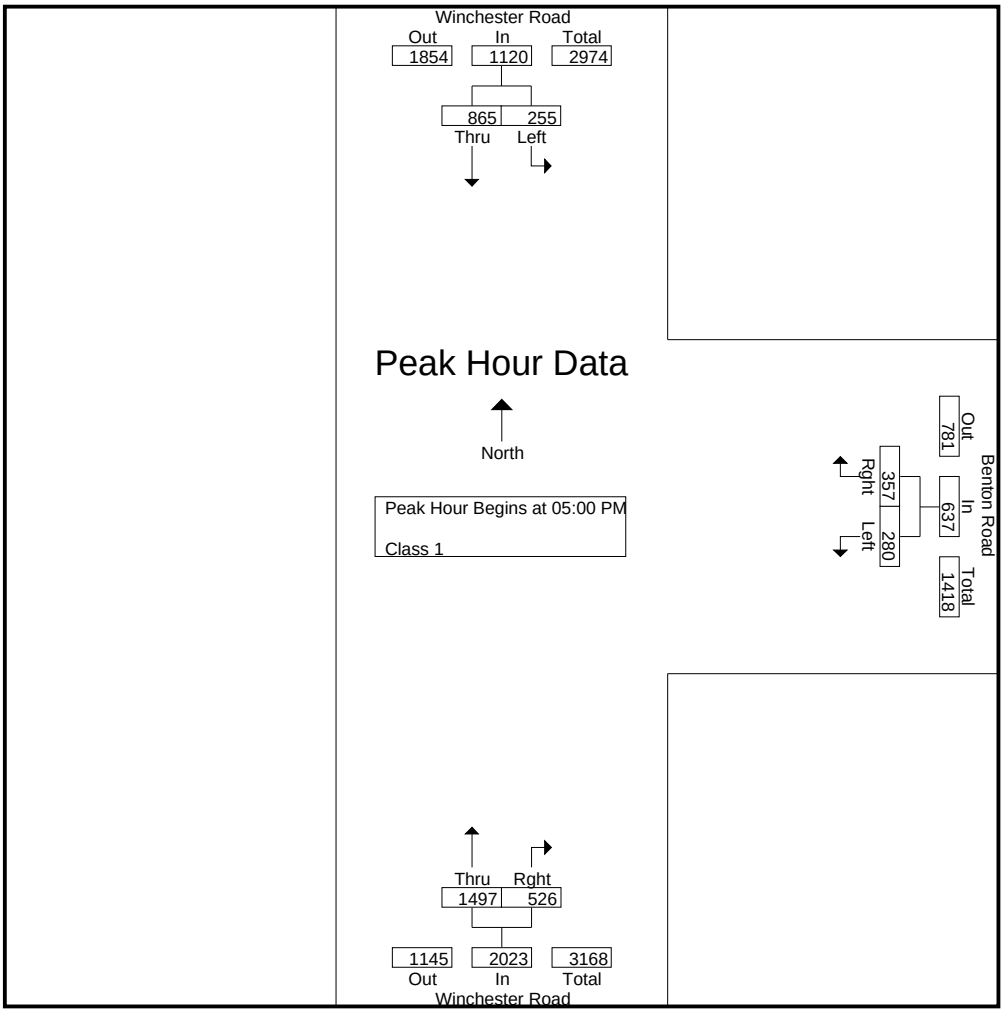

Peak Hour Analysis From 04:00 PM to 05:45 PM - Peak 1 of 1
Peak Hour for Each Approach Begins at:

	05:00 PM			05:00 PM			05:00 PM		
+0 mins.	49	**235**	284	60	91	151	369	105	474
+15 mins.	67	207	274	**76**	84	160	382	123	505
+30 mins.	60	226	**286**	72	79	151	**393**	147	**540**
+45 mins.	**79**	197	276	72	**103**	**175**	353	**151**	504
Total Volume	255	865	1120	280	357	637	1497	526	2023
% App. Total	22.8	77.2		44	56		74	26	
PHF	.807	.920	.979	.921	.867	.910	.952	.871	.937

Counts Unlimited Inc.
PO Box 1178
Corona, CA 92878
(951) 268-6268

County of Riverside
N/S: Winchester Road (SR-79)
E/W: Auld Road
Weather: Sunny

File Name : CRVWIAUAM
Site Code : 10236064
Start Date : 11/4/2010
Page No : 1

Groups Printed- Passenger Vehicles - Large 2 Axle Vehicles - 3 Axle Vehicles - 4+ Axle Trucks

	Winchester Road (SR-79) Southbound				Auld Road Westbound				Winchester Road (SR-79) Northbound				Auld Road Eastbound				
Start Time	Left	Thru	Right	App. Total	Left	Thru	Right	App. Total	Left	Thru	Right	App. Total	Left	Thru	Right	App. Total	Int. Total
07:00 AM	16	350	4	370	53	0	4	57	1	185	67	253	20	3	6	29	709
07:15 AM	33	329	19	381	46	1	4	51	0	187	94	281	8	6	3	17	730
07:30 AM	37	418	11	466	43	2	8	53	1	207	118	326	23	5	4	32	877
07:45 AM	57	370	25	452	49	4	5	58	4	233	116	353	34	5	13	52	915
Total	143	1467	59	1669	191	7	21	219	6	812	395	1213	85	19	26	130	3231
08:00 AM	44	373	46	463	41	6	9	56	3	183	92	278	45	6	12	63	860
08:15 AM	29	379	22	430	51	4	6	61	4	166	83	253	26	2	8	36	780
08:30 AM	37	388	27	452	51	0	9	60	3	160	75	238	22	10	8	40	790
08:45 AM	24	376	15	415	64	4	8	76	1	165	62	228	11	3	8	22	741
Total	134	1516	110	1760	207	14	32	253	11	674	312	997	104	21	36	161	3171
Grand Total	277	2983	169	3429	398	21	53	472	17	1486	707	2210	189	40	62	291	6402
Apprch %	8.1	87	4.9		84.3	4.4	11.2		0.8	67.2	32		64.9	13.7	21.3		
Total %	4.3	46.6	2.6	53.6	6.2	0.3	0.8	7.4	0.3	23.2	11	34.5	3	0.6	1	4.5	
Passenger Vehicles	274	2943	165	3382	395	21	51	467	17	1447	701	2165	186	40	60	286	6300
% Passenger Vehicles	98.9	98.7	97.6	98.6	99.2	100	96.2	98.9	100	97.4	99.2	98	98.4	100	96.8	98.3	98.4
Large 2 Axle Vehicles	3	26	3	32	3	0	1	4	0	30	6	36	3	0	1	4	76
% Large 2 Axle Vehicles	1.1	0.9	1.8	0.9	0.8	0	1.9	0.8	0	2	0.8	1.6	1.6	0	1.6	1.4	1.2
3 Axle Vehicles	0	2	1	3	0	0	1	1	0	4	0	4	0	0	1	1	9
% 3 Axle Vehicles	0	0.1	0.6	0.1	0	0	1.9	0.2	0	0.3	0	0.2	0	0	1.6	0.3	0.1
4+ Axle Trucks	0	12	0	12	0	0	0	0	0	5	0	5	0	0	0	0	17
% 4+ Axle Trucks	0	0.4	0	0.3	0	0	0	0	0	0.3	0	0.2	0	0	0	0	0.3

	Winchester Road (SR-79) Southbound				Auld Road Westbound				Winchester Road (SR-79) Northbound				Auld Road Eastbound				
Start Time	Left	Thru	Right	App. Total	Left	Thru	Right	App. Total	Left	Thru	Right	App. Total	Left	Thru	Right	App. Total	Int. Total
Peak Hour Analysis From 07:30 AM to 08:15 AM - Peak 1 of 1																	
Peak Hour for Entire Intersection Begins at 07:30 AM																	
07:30 AM	37	**418**	11	**466**	43	2	8	53	1	207	**118**	326	23	5	4	32	877
07:45 AM	**57**	370	25	452	49	4	5	58	**4**	**233**	116	**353**	34	5	**13**	52	**915**
08:00 AM	44	373	**46**	463	41	**6**	**9**	56	3	183	92	278	**45**	**6**	12	**63**	860
08:15 AM	29	379	22	430	**51**	4	6	**61**	4	166	83	253	26	2	8	36	780
Total Volume	167	1540	104	1811	184	16	28	228	12	789	409	1210	128	18	37	183	3432
% App. Total	9.2	85	5.7		80.7	7	12.3		1	65.2	33.8		69.9	9.8	20.2		
PHF	.732	.921	.565	.972	.902	.667	.778	.934	.750	.847	.867	.857	.711	.750	.712	.726	.938

Counts Unlimited Inc.
PO Box 1178
Corona, CA 92878
(951) 268-6268

County of Riverside
N/S: Winchester Road (SR-79)
E/W: Auld Road
Weather: Sunny

File Name : CRVWIAUAM
Site Code : 10236064
Start Date : 11/4/2010
Page No : 2

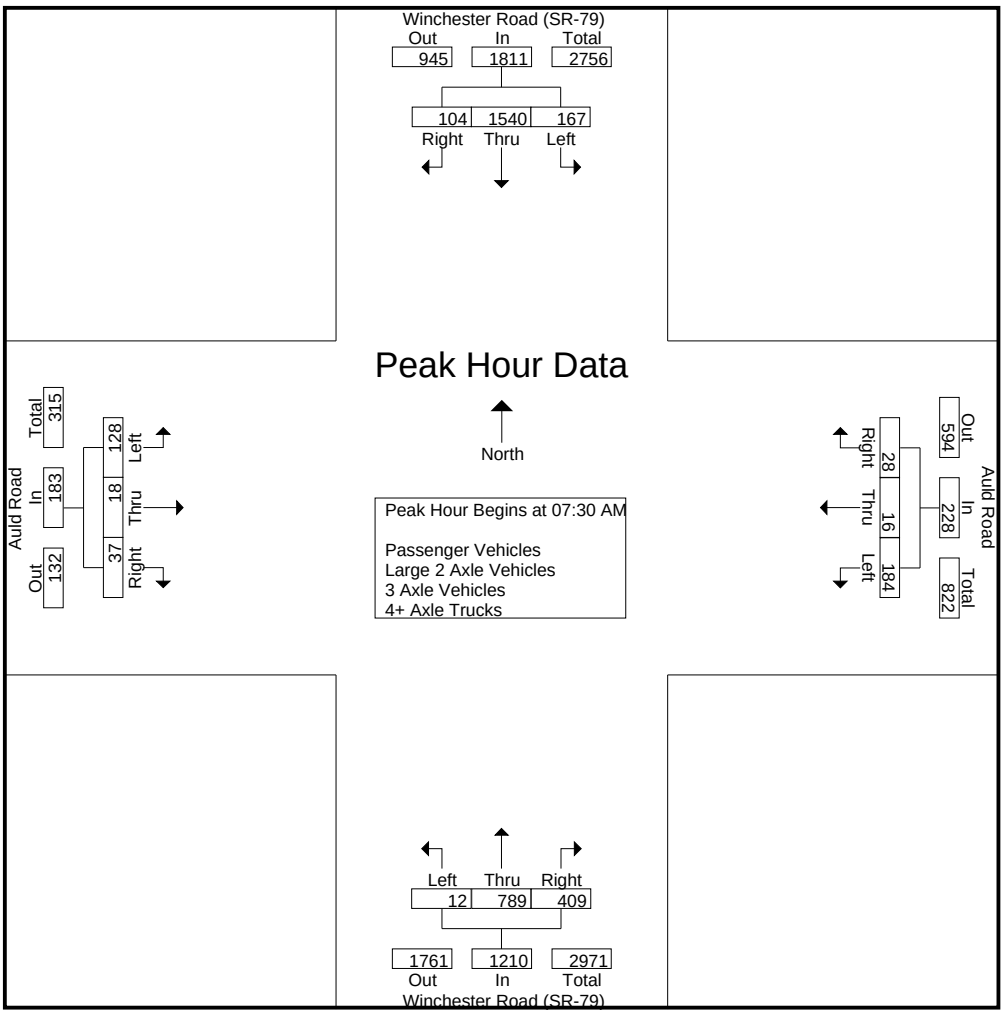

Peak Hour Analysis From 07:30 AM to 08:15 AM - Peak 1 of 1

Peak Hour for Each Approach Begins at:

	07:30 AM				07:30 AM				07:30 AM				07:30 AM			
+0 mins.	37	**418**	11	**466**	43	2	8	53	1	207	**118**	326	23	5	4	32
+15 mins.	**57**	370	25	452	49	4	5	58	**4**	**233**	116	**353**	34	5	**13**	52
+30 mins.	44	373	**46**	463	41	**6**	**9**	56	3	183	92	278	**45**	**6**	12	**63**
+45 mins.	29	379	22	430	**51**	4	6	**61**	4	166	83	253	26	2	8	36
Total Volume	167	1540	104	1811	184	16	28	228	12	789	409	1210	128	18	37	183
% App. Total	9.2	85	5.7		80.7	7	12.3		1	65.2	33.8		69.9	9.8	20.2	
PHF	.732	.921	.565	.972	.902	.667	.778	.934	.750	.847	.867	.857	.711	.750	.712	.726

Counts Unlimited Inc.
PO Box 1178
Corona, CA 92878
(951) 268-6268

County of Riverside
N/S: Winchester Road (SR-79)
E/W: Auld Road
Weather: Sunny

File Name : CRVWIAUAM
Site Code : 10236064
Start Date : 11/4/2010
Page No : 1

Groups Printed- Passenger Vehicles

	Winchester Road (SR-79) Southbound				Auld Road Westbound				Winchester Road (SR-79) Northbound				Auld Road Eastbound				
Start Time	Left	Thru	Right	App. Total	Left	Thru	Right	App. Total	Left	Thru	Right	App. Total	Left	Thru	Right	App. Total	Int. Total
07:00 AM	16	339	4	359	53	0	3	56	1	178	65	244	20	3	6	29	688
07:15 AM	33	323	18	374	46	1	4	51	0	183	92	275	8	6	3	17	717
07:30 AM	36	414	11	461	42	2	8	52	1	203	117	321	23	5	4	32	866
07:45 AM	56	366	25	447	49	4	5	58	4	226	116	346	33	5	13	51	902
Total	141	1442	58	1641	190	7	20	217	6	790	390	1186	84	19	26	129	3173
08:00 AM	44	370	46	460	41	6	8	55	3	178	91	272	43	6	12	61	848
08:15 AM	28	374	22	424	51	4	6	61	4	163	83	250	26	2	8	36	771
08:30 AM	37	384	24	445	49	0	9	58	3	154	75	232	22	10	7	39	774
08:45 AM	24	373	15	412	64	4	8	76	1	162	62	225	11	3	7	21	734
Total	133	1501	107	1741	205	14	31	250	11	657	311	979	102	21	34	157	3127
Grand Total	274	2943	165	3382	395	21	51	467	17	1447	701	2165	186	40	60	286	6300
Apprch %	8.1	87	4.9		84.6	4.5	10.9		0.8	66.8	32.4		65	14	21		
Total %	4.3	46.7	2.6	53.7	6.3	0.3	0.8	7.4	0.3	23	11.1	34.4	3	0.6	1	4.5	

	Winchester Road (SR-79) Southbound				Auld Road Westbound				Winchester Road (SR-79) Northbound				Auld Road Eastbound				
Start Time	Left	Thru	Right	App. Total	Left	Thru	Right	App. Total	Left	Thru	Right	App. Total	Left	Thru	Right	App. Total	Int. Total
Peak Hour Analysis From 07:30 AM to 08:15 AM - Peak 1 of 1																	
Peak Hour for Entire Intersection Begins at 07:30 AM																	
07:30 AM	36	**414**	11	**461**	42	2	**8**	52	1	203	**117**	321	23	5	4	32	866
07:45 AM	**56**	366	25	447	49	4	5	58	**4**	**226**	116	**346**	33	5	**13**	51	**902**
08:00 AM	44	370	**46**	460	41	**6**	8	55	3	178	91	272	**43**	**6**	12	**61**	848
08:15 AM	28	374	22	424	**51**	4	6	**61**	4	163	83	250	26	2	8	36	771
Total Volume	164	1524	104	1792	183	16	27	226	12	770	407	1189	125	18	37	180	3387
% App. Total	9.2	85	5.8		81	7.1	11.9		1	64.8	34.2		69.4	10	20.6		
PHF	.732	.920	.565	.972	.897	.667	.844	.926	.750	.852	.870	.859	.727	.750	.712	.738	.939

Counts Unlimited Inc.
PO Box 1178
Corona, CA 92878
(951) 268-6268

County of Riverside
N/S: Winchester Road (SR-79)
E/W: Auld Road
Weather: Sunny

File Name : CRVWIAUAM
Site Code : 10236064
Start Date : 11/4/2010
Page No : 2

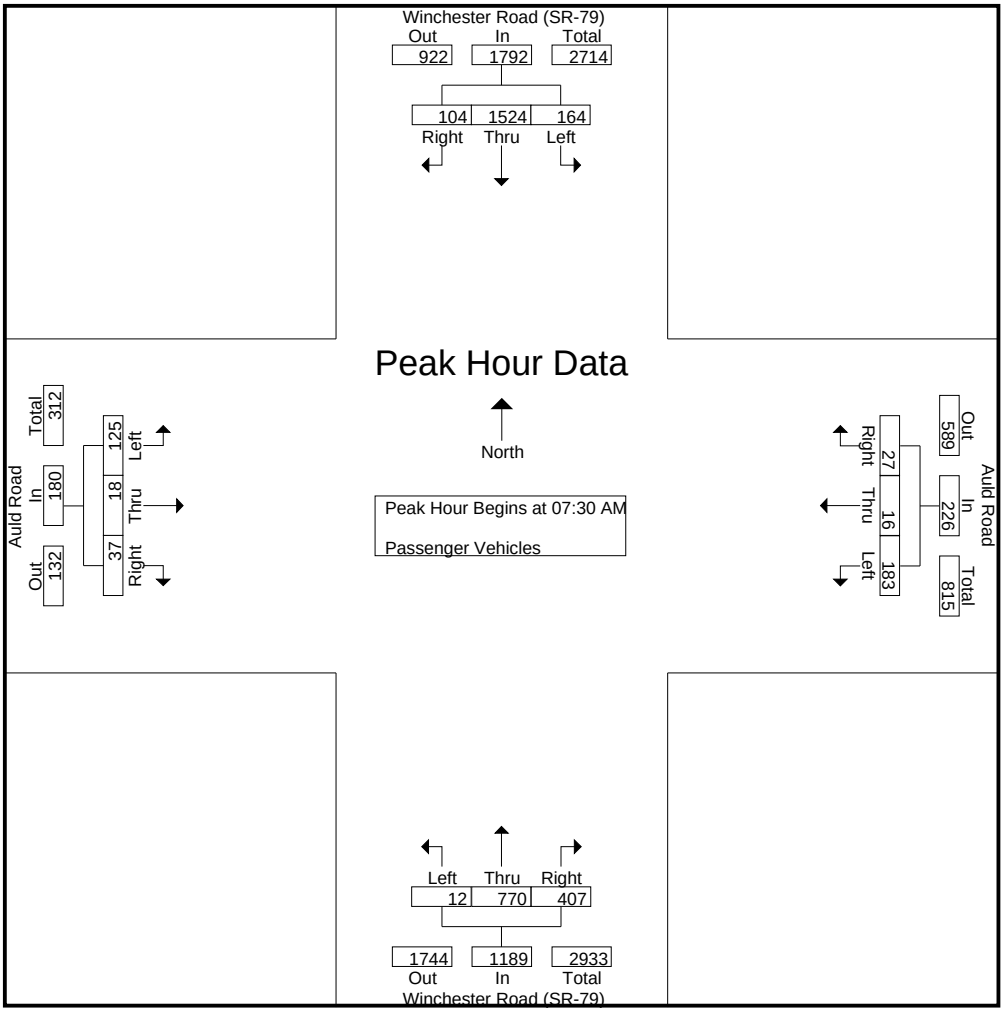

Peak Hour Analysis From 07:30 AM to 08:15 AM - Peak 1 of 1

Peak Hour for Each Approach Begins at:

	07:30 AM				07:30 AM				07:30 AM				07:30 AM			
+0 mins.	36	**414**	11	**461**	42	2	**8**	52	1	203	**117**	321	23	5	4	32
+15 mins.	**56**	366	25	447	49	4	5	58	**4**	**226**	116	**346**	33	5	**13**	51
+30 mins.	44	370	**46**	460	41	**6**	8	55	3	178	91	272	**43**	**6**	12	**61**
+45 mins.	28	374	22	424	**51**	4	6	**61**	4	163	83	250	26	2	8	36
Total Volume	164	1524	104	1792	183	16	27	226	12	770	407	1189	125	18	37	180
% App. Total	9.2	85	5.8		81	7.1	11.9		1	64.8	34.2		69.4	10	20.6	
PHF	.732	.920	.565	.972	.897	.667	.844	.926	.750	.852	.870	.859	.727	.750	.712	.738

Counts Unlimited Inc.
PO Box 1178
Corona, CA 92878
(951) 268-6268

County of Riverside
N/S: Winchester Road (SR-79)
E/W: Auld Road
Weather: Sunny

File Name : CRVWIAUAM
Site Code : 10236064
Start Date : 11/4/2010
Page No : 1

Groups Printed- Large 2 Axle Vehicles

	Winchester Road (SR-79) Southbound				Auld Road Westbound				Winchester Road (SR-79) Northbound				Auld Road Eastbound				
Start Time	Left	Thru	Right	App. Total	Left	Thru	Right	App. Total	Left	Thru	Right	App. Total	Left	Thru	Right	App. Total	Int. Total
07:00 AM	0	6	0	6	0	0	0	0	0	6	2	8	0	0	0	0	14
07:15 AM	0	2	1	3	0	0	0	0	0	3	2	5	0	0	0	0	8
07:30 AM	1	4	0	5	1	0	0	1	0	2	1	3	0	0	0	0	9
07:45 AM	1	2	0	3	0	0	0	0	0	6	0	6	1	0	0	1	10
Total	2	14	1	17	1	0	0	1	0	17	5	22	1	0	0	1	41
08:00 AM	0	3	0	3	0	0	1	1	0	4	1	5	2	0	0	2	11
08:15 AM	1	4	0	5	0	0	0	0	0	1	0	1	0	0	0	0	6
08:30 AM	0	3	2	5	2	0	0	2	0	6	0	6	0	0	0	0	13
08:45 AM	0	2	0	2	0	0	0	0	0	2	0	2	0	0	1	1	5
Total	1	12	2	15	2	0	1	3	0	13	1	14	2	0	1	3	35
Grand Total	3	26	3	32	3	0	1	4	0	30	6	36	3	0	1	4	76
Apprch %	9.4	81.2	9.4		75	0	25		0	83.3	16.7		75	0	25		
Total %	3.9	34.2	3.9	42.1	3.9	0	1.3	5.3	0	39.5	7.9	47.4	3.9	0	1.3	5.3	

	Winchester Road (SR-79) Southbound				Auld Road Westbound				Winchester Road (SR-79) Northbound				Auld Road Eastbound				
Start Time	Left	Thru	Right	App. Total	Left	Thru	Right	App. Total	Left	Thru	Right	App. Total	Left	Thru	Right	App. Total	Int. Total
Peak Hour Analysis From 07:30 AM to 08:15 AM - Peak 1 of 1																	
Peak Hour for Entire Intersection Begins at 07:30 AM																	
07:30 AM	**1**	**4**	0	**5**	**1**	0	0	**1**	0	2	**1**	3	0	0	0	0	9
07:45 AM	1	2	0	3	0	0	0	0	0	**6**	0	**6**	1	0	0	1	10
08:00 AM	0	3	0	3	0	0	**1**	1	0	4	1	5	**2**	0	0	**2**	**11**
08:15 AM	1	4	0	5	0	0	0	0	0	1	0	1	0	0	0	0	6
Total Volume	3	13	0	16	1	0	1	2	0	13	2	15	3	0	0	3	36
% App. Total	18.8	81.2	0		50	0	50		0	86.7	13.3		100	0	0		
PHF	.750	.813	.000	.800	.250	.000	.250	.500	.000	.542	.500	.625	.375	.000	.000	.375	.818

Counts Unlimited Inc.
PO Box 1178
Corona, CA 92878
(951) 268-6268

County of Riverside
N/S: Winchester Road (SR-79)
E/W: Auld Road
Weather: Sunny

File Name : CRVWIAUAM
Site Code : 10236064
Start Date : 11/4/2010
Page No : 2

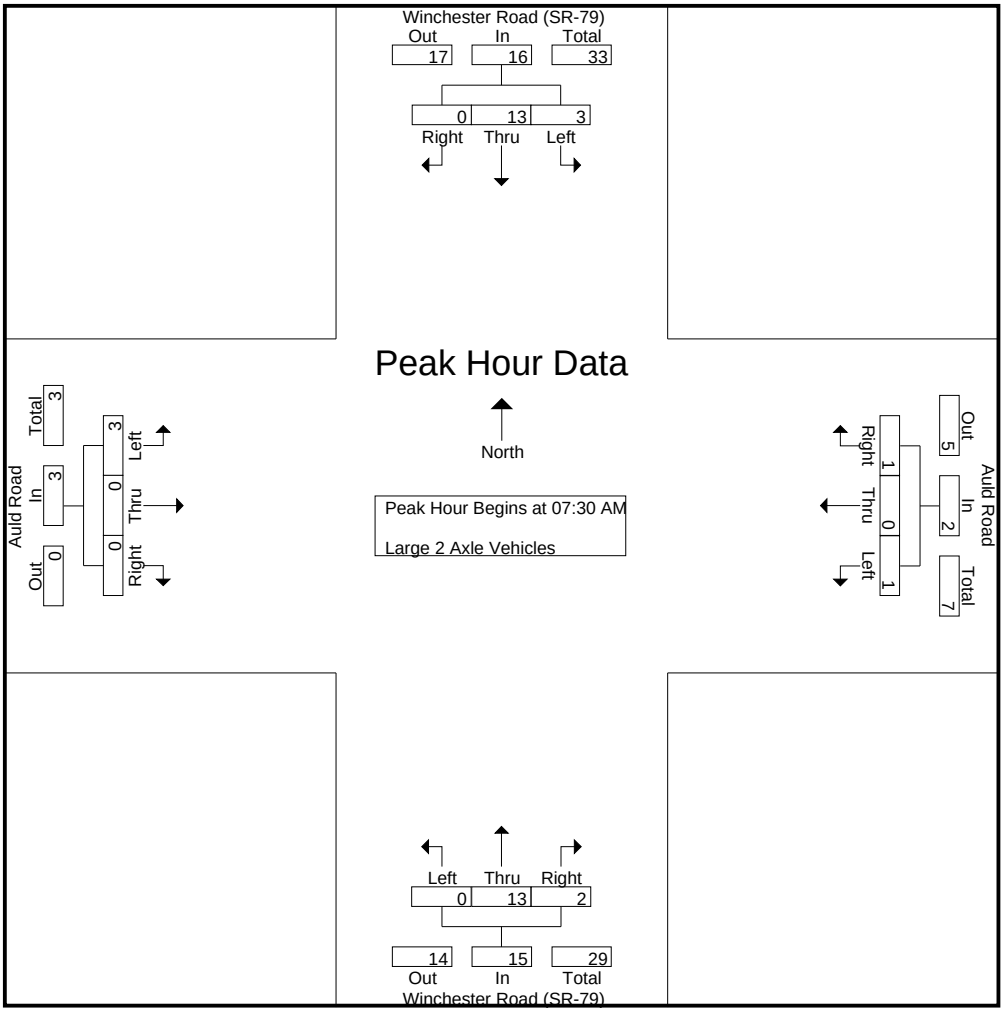

Peak Hour Analysis From 07:30 AM to 08:15 AM - Peak 1 of 1

Peak Hour for Each Approach Begins at:

	07:30 AM				07:30 AM				07:30 AM				07:30 AM			
+0 mins.	**1**	**4**	0	**5**	**1**	0	0	**1**	0	2	**1**	3	0	0	0	0
+15 mins.	1	2	0	3	0	0	0	0	0	**6**	0	**6**	1	0	0	1
+30 mins.	0	3	0	3	0	0	**1**	1	0	4	1	5	**2**	0	0	**2**
+45 mins.	1	4	0	5	0	0	0	0	0	1	0	1	0	0	0	0
Total Volume	3	13	0	16	1	0	1	2	0	13	2	15	3	0	0	3
% App. Total	18.8	81.2	0		50	0	50		0	86.7	13.3		100	0	0	
PHF	.750	.813	.000	.800	.250	.000	.250	.500	.000	.542	.500	.625	.375	.000	.000	.375

Counts Unlimited Inc.
PO Box 1178
Corona, CA 92878
(951) 268-6268

County of Riverside
N/S: Winchester Road (SR-79)
E/W: Auld Road
Weather: Sunny

File Name : CRVWIAUAM
Site Code : 10236064
Start Date : 11/4/2010
Page No : 1

Groups Printed- 3 Axle Vehicles

	Winchester Road (SR-79) Southbound				Auld Road Westbound				Winchester Road (SR-79) Northbound				Auld Road Eastbound				
Start Time	Left	Thru	Right	App. Total	Left	Thru	Right	App. Total	Left	Thru	Right	App. Total	Left	Thru	Right	App. Total	Int. Total
07:00 AM	0	0	0	0	0	0	1	1	0	0	0	0	0	0	0	0	1
07:15 AM	0	0	0	0	0	0	0	0	0	1	0	1	0	0	0	0	1
07:30 AM	0	0	0	0	0	0	0	0	0	1	0	1	0	0	0	0	1
07:45 AM	0	0	0	0	0	0	0	0	0	0	0	0	0	0	0	0	0
Total	0	0	0	0	0	0	1	1	0	2	0	2	0	0	0	0	3
08:00 AM	0	0	0	0	0	0	0	0	0	0	0	0	0	0	0	0	0
08:15 AM	0	0	0	0	0	0	0	0	0	1	0	1	0	0	0	0	1
08:30 AM	0	1	1	2	0	0	0	0	0	0	0	0	0	0	1	1	3
08:45 AM	0	1	0	1	0	0	0	0	0	1	0	1	0	0	0	0	2
Total	0	2	1	3	0	0	0	0	0	2	0	2	0	0	1	1	6
Grand Total	0	2	1	3	0	0	1	1	0	4	0	4	0	0	1	1	9
Apprch %	0	66.7	33.3		0	0	100		0	100	0		0	0	100		
Total %	0	22.2	11.1	33.3	0	0	11.1	11.1	0	44.4	0	44.4	0	0	11.1	11.1	

	Winchester Road (SR-79) Southbound				Auld Road Westbound				Winchester Road (SR-79) Northbound				Auld Road Eastbound				
Start Time	Left	Thru	Right	App. Total	Left	Thru	Right	App. Total	Left	Thru	Right	App. Total	Left	Thru	Right	App. Total	Int. Total
Peak Hour Analysis From 07:30 AM to 08:15 AM - Peak 1 of 1																	
Peak Hour for Entire Intersection Begins at 07:30 AM																	
07:30 AM	0	0	0	0	0	0	0	0	0	**1**	0	**1**	0	0	0	0	**1**
07:45 AM	0	0	0	0	0	0	0	0	0	0	0	0	0	0	0	0	0
08:00 AM	0	0	0	0	0	0	0	0	0	0	0	0	0	0	0	0	0
08:15 AM	0	0	0	0	0	0	0	0	0	1	0	1	0	0	0	0	1
Total Volume	0	0	0	0	0	0	0	0	0	2	0	2	0	0	0	0	2
% App. Total	0	0	0		0	0	0		0	100	0		0	0	0		
PHF	.000	.000	.000	.000	.000	.000	.000	.000	.000	.500	.000	.500	.000	.000	.000	.000	.500

Counts Unlimited Inc.
PO Box 1178
Corona, CA 92878
(951) 268-6268

County of Riverside
N/S: Winchester Road (SR-79)
E/W: Auld Road
Weather: Sunny

File Name : CRVWIAUAM
Site Code : 10236064
Start Date : 11/4/2010
Page No : 2

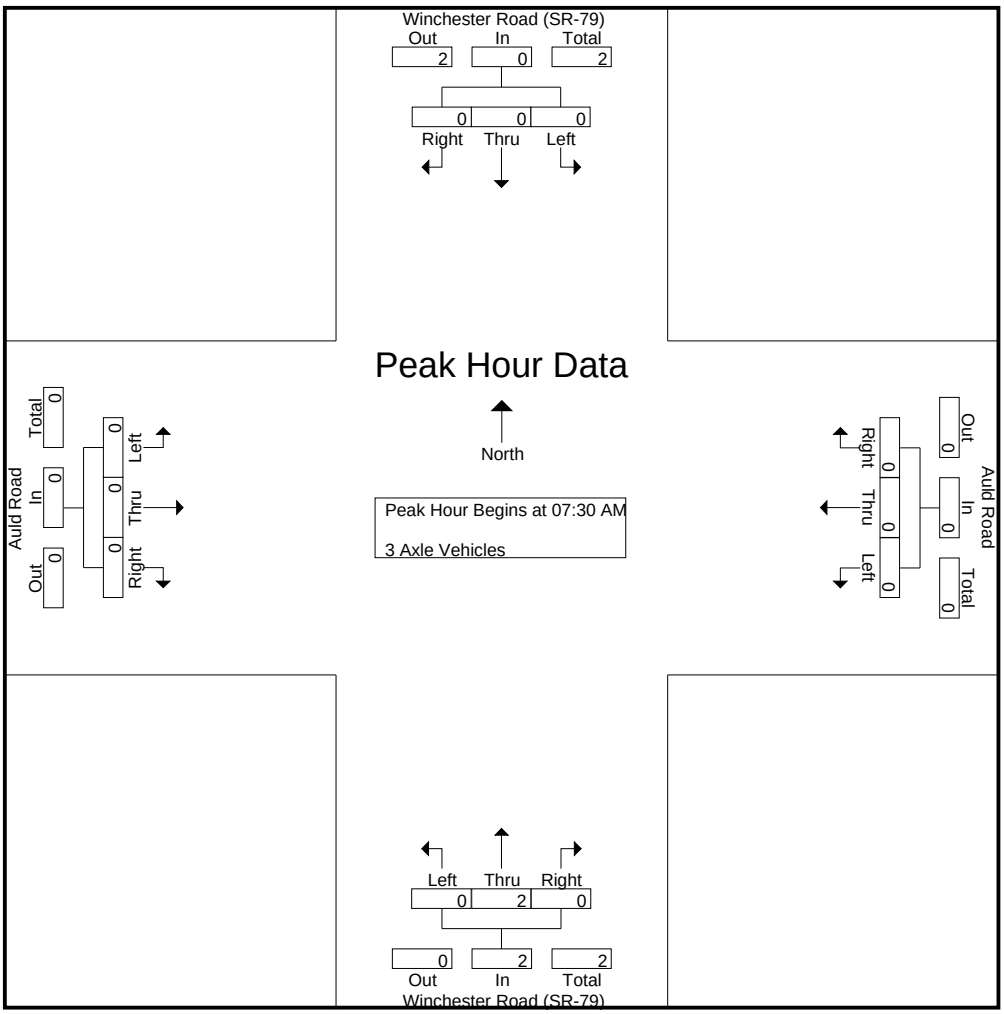

Peak Hour Analysis From 07:30 AM to 08:15 AM - Peak 1 of 1

Peak Hour for Each Approach Begins at:

	07:30 AM				07:30 AM				07:30 AM				07:30 AM			
+0 mins.	0	0	0	0	0	0	0	0	0	**1**	0	**1**	0	0	0	0
+15 mins.	0	0	0	0	0	0	0	0	0	0	0	0	0	0	0	0
+30 mins.	0	0	0	0	0	0	0	0	0	0	0	0	0	0	0	0
+45 mins.	0	0	0	0	0	0	0	0	0	1	0	1	0	0	0	0
Total Volume	0	0	0	0	0	0	0	0	0	2	0	2	0	0	0	0
% App. Total	0	0	0		0	0	0		0	100	0		0	0	0	
PHF	.000	.000	.000	.000	.000	.000	.000	.000	.000	.500	.000	.500	.000	.000	.000	.000

Counts Unlimited Inc.
PO Box 1178
Corona, CA 92878
(951) 268-6268

County of Riverside
N/S: Winchester Road (SR-79)
E/W: Auld Road
Weather: Sunny

File Name : CRVWIAUAM
Site Code : 10236064
Start Date : 11/4/2010
Page No : 1

Groups Printed- 4+ Axle Trucks

	Winchester Road (SR-79) Southbound				Auld Road Westbound				Winchester Road (SR-79) Northbound				Auld Road Eastbound				
Start Time	Left	Thru	Right	App. Total	Left	Thru	Right	App. Total	Left	Thru	Right	App. Total	Left	Thru	Right	App. Total	Int. Total
07:00 AM	0	5	0	5	0	0	0	0	0	1	0	1	0	0	0	0	6
07:15 AM	0	4	0	4	0	0	0	0	0	0	0	0	0	0	0	0	4
07:30 AM	0	0	0	0	0	0	0	0	0	1	0	1	0	0	0	0	1
07:45 AM	0	2	0	2	0	0	0	0	0	1	0	1	0	0	0	0	3
Total	0	11	0	11	0	0	0	0	0	3	0	3	0	0	0	0	14
08:00 AM	0	0	0	0	0	0	0	0	0	1	0	1	0	0	0	0	1
08:15 AM	0	1	0	1	0	0	0	0	0	1	0	1	0	0	0	0	2
08:30 AM	0	0	0	0	0	0	0	0	0	0	0	0	0	0	0	0	0
08:45 AM	0	0	0	0	0	0	0	0	0	0	0	0	0	0	0	0	0
Total	0	1	0	1	0	0	0	0	0	2	0	2	0	0	0	0	3
Grand Total	0	12	0	12	0	0	0	0	0	5	0	5	0	0	0	0	17
Apprch %	0	100	0		0	0	0		0	100	0		0	0	0		
Total %	0	70.6	0	70.6	0	0	0	0	0	29.4	0	29.4	0	0	0	0	

	Winchester Road (SR-79) Southbound				Auld Road Westbound				Winchester Road (SR-79) Northbound				Auld Road Eastbound				
Start Time	Left	Thru	Right	App. Total	Left	Thru	Right	App. Total	Left	Thru	Right	App. Total	Left	Thru	Right	App. Total	Int. Total
Peak Hour Analysis From 07:30 AM to 08:15 AM - Peak 1 of 1																	
Peak Hour for Entire Intersection Begins at 07:30 AM																	
07:30 AM	0	0	0	0	0	0	0	0	0	**1**	0	**1**	0	0	0	0	1
07:45 AM	0	**2**	0	**2**	0	0	0	0	0	1	0	1	0	0	0	0	**3**
08:00 AM	0	0	0	0	0	0	0	0	0	1	0	1	0	0	0	0	1
08:15 AM	0	1	0	1	0	0	0	0	0	1	0	1	0	0	0	0	2
Total Volume	0	3	0	3	0	0	0	0	0	4	0	4	0	0	0	0	7
% App. Total	0	100	0		0	0	0		0	100	0		0	0	0		
PHF	.000	.375	.000	.375	.000	.000	.000	.000	.000	1.000	.000	1.000	.000	.000	.000	.000	.583

Counts Unlimited Inc.
PO Box 1178
Corona, CA 92878
(951) 268-6268

County of Riverside
N/S: Winchester Road (SR-79)
E/W: Auld Road
Weather: Sunny

File Name : CRVWIAUAM
Site Code : 10236064
Start Date : 11/4/2010
Page No : 2

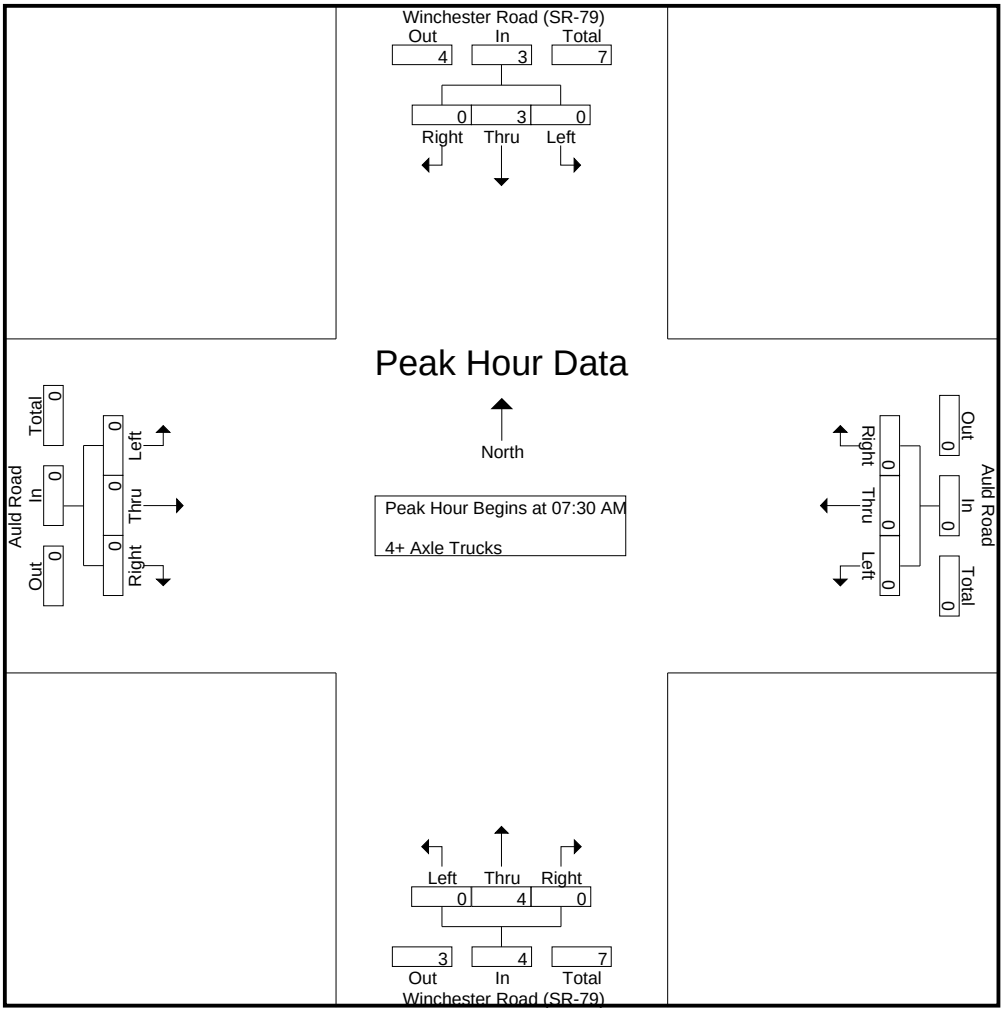

Peak Hour Analysis From 07:30 AM to 08:15 AM - Peak 1 of 1

Peak Hour for Each Approach Begins at:

	07:30 AM				07:30 AM				07:30 AM				07:30 AM			
+0 mins.	0	0	0	0	0	0	0	0	0	**1**	0	**1**	0	0	0	0
+15 mins.	0	**2**	0	**2**	0	0	0	0	0	1	0	1	0	0	0	0
+30 mins.	0	0	0	0	0	0	0	0	0	1	0	1	0	0	0	0
+45 mins.	0	1	0	1	0	0	0	0	0	1	0	1	0	0	0	0
Total Volume	0	3	0	3	0	0	0	0	0	4	0	4	0	0	0	0
% App. Total	0	100	0		0	0	0		0	100	0		0	0	0	
PHF	.000	.375	.000	.375	.000	.000	.000	.000	.000	1.000	.000	1.000	.000	.000	.000	.000

Counts Unlimited Inc.
PO Box 1178
Corona, CA 92878
(951) 268-6268

County of Riverside
N/S: Winchester Road (SR-79)
E/W: Auld Road
Weather: Sunny

File Name : CRVWIAUPM
Site Code : 10236064
Start Date : 11/4/2010
Page No : 1

Groups Printed- Passenger Vehicles - Large 2 Axle Vehicles - 3 Axle Vehicles - 4+ Axle Trucks

	Winchester Road (SR-79) Southbound				Auld Road Westbound				Winchester Road (SR-79) Northbound				Auld Road Eastbound				
Start Time	Left	Thru	Right	App. Total	Left	Thru	Right	App. Total	Left	Thru	Right	App. Total	Left	Thru	Right	App. Total	Int. Total
04:00 AM	7	260	17	284	66	4	26	96	13	367	40	420	7	0	4	11	811
04:15 AM	11	258	13	282	57	6	18	81	8	487	45	540	12	0	11	23	926
04:30 AM	22	252	16	290	90	1	24	115	6	459	51	516	12	3	4	19	940
04:45 AM	3	273	16	292	67	4	10	81	3	480	60	543	19	5	8	32	948
Total	43	1043	62	1148	280	15	78	373	30	1793	196	2019	50	8	27	85	3625
05:00 AM	6	286	10	302	90	5	34	129	7	467	48	522	15	3	4	22	975
05:15 AM	9	261	13	283	47	3	10	60	5	440	38	483	17	1	4	22	848
05:30 AM	18	269	15	302	46	2	18	66	8	501	47	556	12	3	7	22	946
05:45 AM	18	252	16	286	52	0	13	65	4	389	53	446	18	0	12	30	827
Total	51	1068	54	1173	235	10	75	320	24	1797	186	2007	62	7	27	96	3596
Grand Total	94	2111	116	2321	515	25	153	693	54	3590	382	4026	112	15	54	181	7221
Apprch %	4	91	5		74.3	3.6	22.1		1.3	89.2	9.5		61.9	8.3	29.8		
Total %	1.3	29.2	1.6	32.1	7.1	0.3	2.1	9.6	0.7	49.7	5.3	55.8	1.6	0.2	0.7	2.5	
Passenger Vehicles	93	2085	114	2292	509	25	150	684	52	3567	377	3996	111	15	54	180	7152
% Passenger Vehicles	98.9	98.8	98.3	98.8	98.8	100	98	98.7	96.3	99.4	98.7	99.3	99.1	100	100	99.4	99
Large 2 Axle Vehicles	1	23	1	25	6	0	3	9	2	19	5	26	1	0	0	1	61
% Large 2 Axle Vehicles	1.1	1.1	0.9	1.1	1.2	0	2	1.3	3.7	0.5	1.3	0.6	0.9	0	0	0.6	0.8
3 Axle Vehicles	0	2	1	3	0	0	0	0	0	2	0	2	0	0	0	0	5
% 3 Axle Vehicles	0	0.1	0.9	0.1	0	0	0	0	0	0.1	0	0	0	0	0	0	0.1
4+ Axle Trucks	0	1	0	1	0	0	0	0	0	2	0	2	0	0	0	0	3
% 4+ Axle Trucks	0	0	0	0	0	0	0	0	0	0.1	0	0	0	0	0	0	0

	Winchester Road (SR-79) Southbound				Auld Road Westbound				Winchester Road (SR-79) Northbound				Auld Road Eastbound				
Start Time	Left	Thru	Right	App. Total	Left	Thru	Right	App. Total	Left	Thru	Right	App. Total	Left	Thru	Right	App. Total	Int. Total
Peak Hour Analysis From 04:00 AM to 05:45 AM - Peak 1 of 1																	
Peak Hour for Entire Intersection Begins at 04:15 AM																	
04:15 AM	11	258	13	282	57	**6**	18	81	**8**	**487**	45	540	12	0	**11**	23	926
04:30 AM	**22**	252	**16**	290	**90**	1	24	115	6	459	51	516	12	3	4	19	940
04:45 AM	3	273	16	292	67	4	10	81	3	480	**60**	**543**	**19**	**5**	8	**32**	948
05:00 AM	6	**286**	10	**302**	90	5	**34**	**129**	7	467	48	522	15	3	4	22	**975**
Total Volume	42	1069	55	1166	304	16	86	406	24	1893	204	2121	58	11	27	96	3789
% App. Total	3.6	91.7	4.7		74.9	3.9	21.2		1.1	89.3	9.6		60.4	11.5	28.1		
PHF	.477	.934	.859	.965	.844	.667	.632	.787	.750	.972	.850	.977	.763	.550	.614	.750	.972

Counts Unlimited Inc.
PO Box 1178
Corona, CA 92878
(951) 268-6268

County of Riverside
N/S: Winchester Road (SR-79)
E/W: Auld Road
Weather: Sunny

File Name : CRVWIAUPM
Site Code : 10236064
Start Date : 11/4/2010
Page No : 2

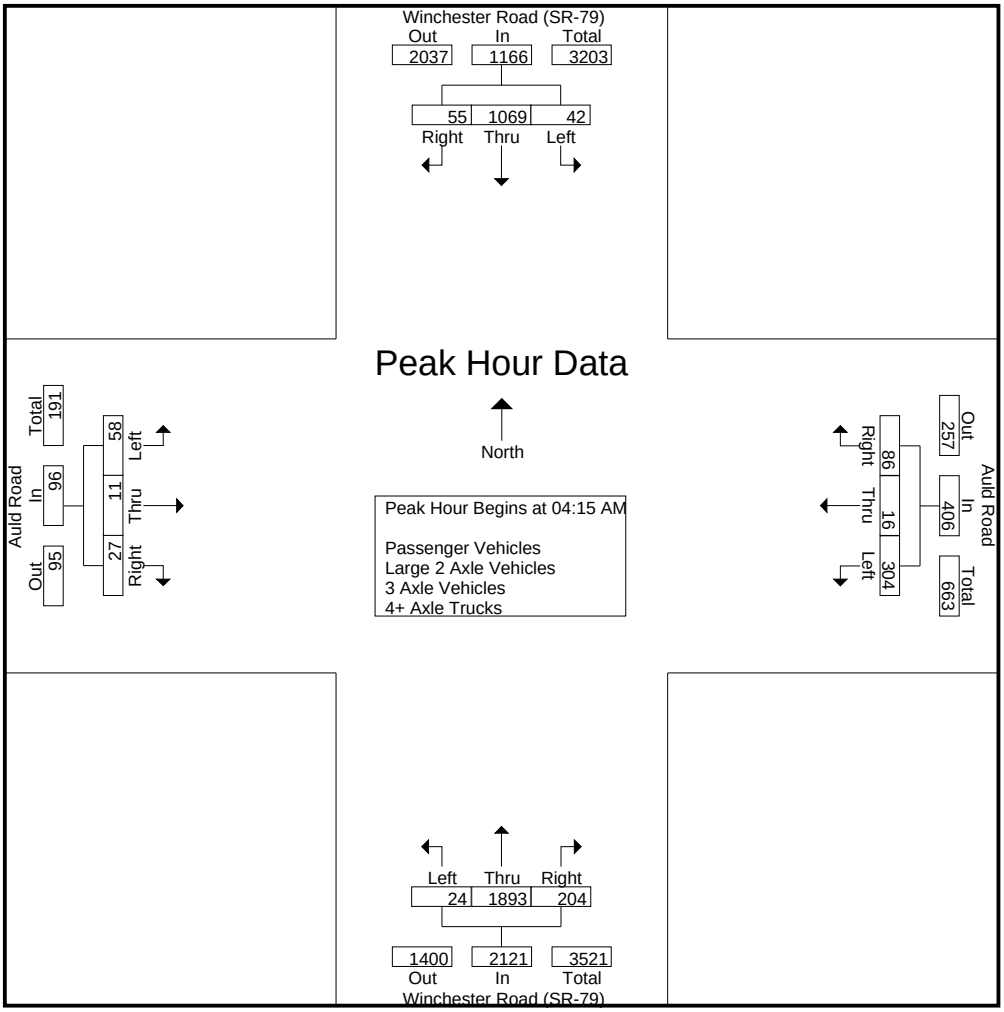

Peak Hour Analysis From 04:00 AM to 05:45 AM - Peak 1 of 1

Peak Hour for Each Approach Begins at:

	04:45 AM				04:15 AM				04:15 AM				04:45 AM			
+0 mins.	3	273	**16**	292	57	**6**	18	81	**8**	**487**	45	540	**19**	**5**	**8**	**32**
+15 mins.	6	**286**	10	**302**	**90**	1	24	115	6	459	51	516	15	3	4	22
+30 mins.	9	261	13	283	67	4	10	81	3	480	**60**	**543**	17	1	4	22
+45 mins.	**18**	269	15	302	90	5	**34**	**129**	7	467	48	522	12	3	7	22
Total Volume	36	1089	54	1179	304	16	86	406	24	1893	204	2121	63	12	23	98
% App. Total	3.1	92.4	4.6		74.9	3.9	21.2		1.1	89.3	9.6		64.3	12.2	23.5	
PHF	.500	.952	.844	.976	.844	.667	.632	.787	.750	.972	.850	.977	.829	.600	.719	.766

Counts Unlimited Inc.
PO Box 1178
Corona, CA 92878
(951) 268-6268

County of Riverside
N/S: Winchester Road (SR-79)
E/W: Auld Road
Weather: Sunny

File Name : CRVWIAUPM
Site Code : 10236064
Start Date : 11/4/2010
Page No : 1

Groups Printed- Passenger Vehicles

	Winchester Road (SR-79) Southbound				Auld Road Westbound				Winchester Road (SR-79) Northbound				Auld Road Eastbound				
Start Time	Left	Thru	Right	App. Total	Left	Thru	Right	App. Total	Left	Thru	Right	App. Total	Left	Thru	Right	App. Total	Int. Total
04:00 AM	7	252	17	276	64	4	26	94	13	362	39	414	7	0	4	11	795
04:15 AM	10	254	12	276	56	6	16	78	7	483	44	534	12	0	11	23	911
04:30 AM	22	246	16	284	88	1	24	113	6	458	51	515	12	3	4	19	931
04:45 AM	3	271	16	290	67	4	9	80	3	475	59	537	19	5	8	32	939
Total	42	1023	61	1126	275	15	75	365	29	1778	193	2000	50	8	27	85	3576
05:00 AM	6	284	9	299	90	5	34	129	7	465	47	519	15	3	4	22	969
05:15 AM	9	261	13	283	47	3	10	60	4	437	38	479	16	1	4	21	843
05:30 AM	18	265	15	298	46	2	18	66	8	499	46	553	12	3	7	22	939
05:45 AM	18	252	16	286	51	0	13	64	4	388	53	445	18	0	12	30	825
Total	51	1062	53	1166	234	10	75	319	23	1789	184	1996	61	7	27	95	3576
Grand Total	93	2085	114	2292	509	25	150	684	52	3567	377	3996	111	15	54	180	7152
Apprch %	4.1	91	5		74.4	3.7	21.9		1.3	89.3	9.4		61.7	8.3	30		
Total %	1.3	29.2	1.6	32	7.1	0.3	2.1	9.6	0.7	49.9	5.3	55.9	1.6	0.2	0.8	2.5	

	Winchester Road (SR-79) Southbound				Auld Road Westbound				Winchester Road (SR-79) Northbound				Auld Road Eastbound				
Start Time	Left	Thru	Right	App. Total	Left	Thru	Right	App. Total	Left	Thru	Right	App. Total	Left	Thru	Right	App. Total	Int. Total
Peak Hour Analysis From 04:15 AM to 05:00 AM - Peak 1 of 1																	
Peak Hour for Entire Intersection Begins at 04:15 AM																	
04:15 AM	10	254	12	276	56	**6**	16	78	**7**	**483**	44	534	12	0	**11**	23	911
04:30 AM	**22**	246	**16**	284	88	1	24	113	6	458	51	515	12	3	4	19	931
04:45 AM	3	271	16	290	67	4	9	80	3	475	**59**	**537**	**19**	**5**	8	**32**	939
05:00 AM	6	**284**	9	**299**	**90**	5	**34**	**129**	7	465	47	519	15	3	4	22	**969**
Total Volume	41	1055	53	1149	301	16	83	400	23	1881	201	2105	58	11	27	96	3750
% App. Total	3.6	91.8	4.6		75.2	4	20.8		1.1	89.4	9.5		60.4	11.5	28.1		
PHF	.466	.929	.828	.961	.836	.667	.610	.775	.821	.974	.852	.980	.763	.550	.614	.750	.967

Counts Unlimited Inc.
PO Box 1178
Corona, CA 92878
(951) 268-6268

County of Riverside
N/S: Winchester Road (SR-79)
E/W: Auld Road
Weather: Sunny

File Name : CRVWIAUPM
Site Code : 10236064
Start Date : 11/4/2010
Page No : 2

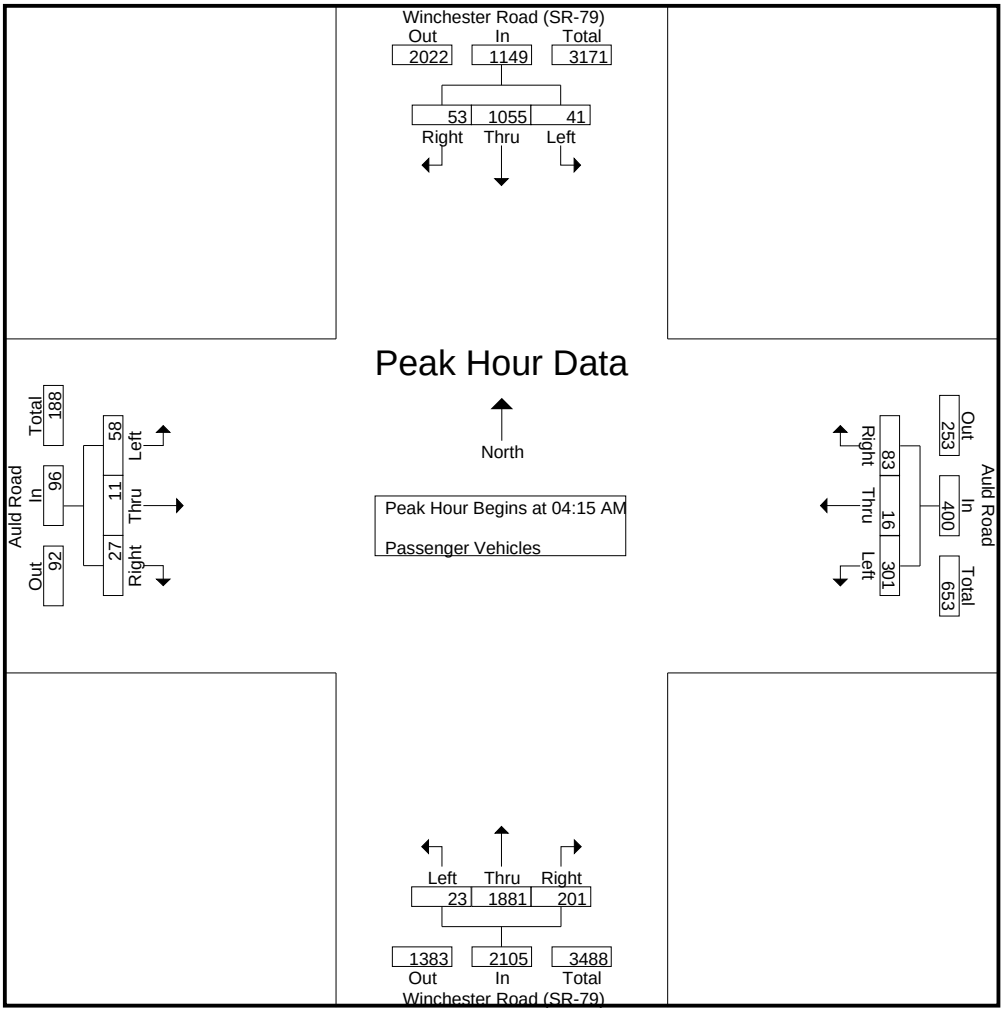

Peak Hour Analysis From 04:15 AM to 05:00 AM - Peak 1 of 1

Peak Hour for Each Approach Begins at:

	04:15 AM				04:15 AM				04:15 AM				04:15 AM			
+0 mins.	10	254	12	276	56	**6**	16	78	**7**	**483**	44	534	12	0	**11**	23
+15 mins.	**22**	246	**16**	284	88	1	24	113	6	458	51	515	12	3	4	19
+30 mins.	3	271	16	290	67	4	9	80	3	475	**59**	**537**	**19**	**5**	8	**32**
+45 mins.	6	**284**	9	**299**	**90**	5	**34**	**129**	7	465	47	519	15	3	4	22
Total Volume	41	1055	53	1149	301	16	83	400	23	1881	201	2105	58	11	27	96
% App. Total	3.6	91.8	4.6		75.2	4	20.8		1.1	89.4	9.5		60.4	11.5	28.1	
PHF	.466	.929	.828	.961	.836	.667	.610	.775	.821	.974	.852	.980	.763	.550	.614	.750

Counts Unlimited Inc.
PO Box 1178
Corona, CA 92878
(951) 268-6268

County of Riverside
N/S: Winchester Road (SR-79)
E/W: Auld Road
Weather: Sunny

File Name : CRVWIAUPM
Site Code : 10236064
Start Date : 11/4/2010
Page No : 1

Groups Printed- Large 2 Axle Vehicles

	Winchester Road (SR-79) Southbound				Auld Road Westbound				Winchester Road (SR-79) Northbound				Auld Road Eastbound				
Start Time	Left	Thru	Right	App. Total	Left	Thru	Right	App. Total	Left	Thru	Right	App. Total	Left	Thru	Right	App. Total	Int. Total
04:00 AM	0	8	0	8	2	0	0	2	0	5	1	6	0	0	0	0	16
04:15 AM	1	2	0	3	1	0	2	3	1	2	1	4	0	0	0	0	10
04:30 AM	0	5	0	5	2	0	0	2	0	1	0	1	0	0	0	0	8
04:45 AM	0	2	0	2	0	0	1	1	0	4	1	5	0	0	0	0	8
Total	1	17	0	18	5	0	3	8	1	12	3	16	0	0	0	0	42
05:00 AM	0	2	1	3	0	0	0	0	0	2	1	3	0	0	0	0	6
05:15 AM	0	0	0	0	0	0	0	0	1	2	0	3	1	0	0	1	4
05:30 AM	0	4	0	4	0	0	0	0	0	2	1	3	0	0	0	0	7
05:45 AM	0	0	0	0	1	0	0	1	0	1	0	1	0	0	0	0	2
Total	0	6	1	7	1	0	0	1	1	7	2	10	1	0	0	1	19
Grand Total	1	23	1	25	6	0	3	9	2	19	5	26	1	0	0	1	61
Apprch %	4	92	4		66.7	0	33.3		7.7	73.1	19.2		100	0	0		
Total %	1.6	37.7	1.6	41	9.8	0	4.9	14.8	3.3	31.1	8.2	42.6	1.6	0	0	1.6	

	Winchester Road (SR-79) Southbound				Auld Road Westbound				Winchester Road (SR-79) Northbound				Auld Road Eastbound				
Start Time	Left	Thru	Right	App. Total	Left	Thru	Right	App. Total	Left	Thru	Right	App. Total	Left	Thru	Right	App. Total	Int. Total
Peak Hour Analysis From 04:15 AM to 05:00 AM - Peak 1 of 1																	
Peak Hour for Entire Intersection Begins at 04:15 AM																	
04:15 AM	**1**	2	0	3	1	0	**2**	**3**	**1**	2	**1**	4	0	0	0	0	**10**
04:30 AM	0	**5**	0	**5**	**2**	0	0	2	0	1	0	1	0	0	0	0	8
04:45 AM	0	2	0	2	0	0	1	1	0	**4**	1	**5**	0	0	0	0	8
05:00 AM	0	2	**1**	3	0	0	0	0	0	2	1	3	0	0	0	0	6
Total Volume	1	11	1	13	3	0	3	6	1	9	3	13	0	0	0	0	32
% App. Total	7.7	84.6	7.7		50	0	50		7.7	69.2	23.1		0	0	0		
PHF	.250	.550	.250	.650	.375	.000	.375	.500	.250	.563	.750	.650	.000	.000	.000	.000	.800

Counts Unlimited Inc.
PO Box 1178
Corona, CA 92878
(951) 268-6268

County of Riverside
N/S: Winchester Road (SR-79)
E/W: Auld Road
Weather: Sunny

File Name : CRVWIAUPM
Site Code : 10236064
Start Date : 11/4/2010
Page No : 2

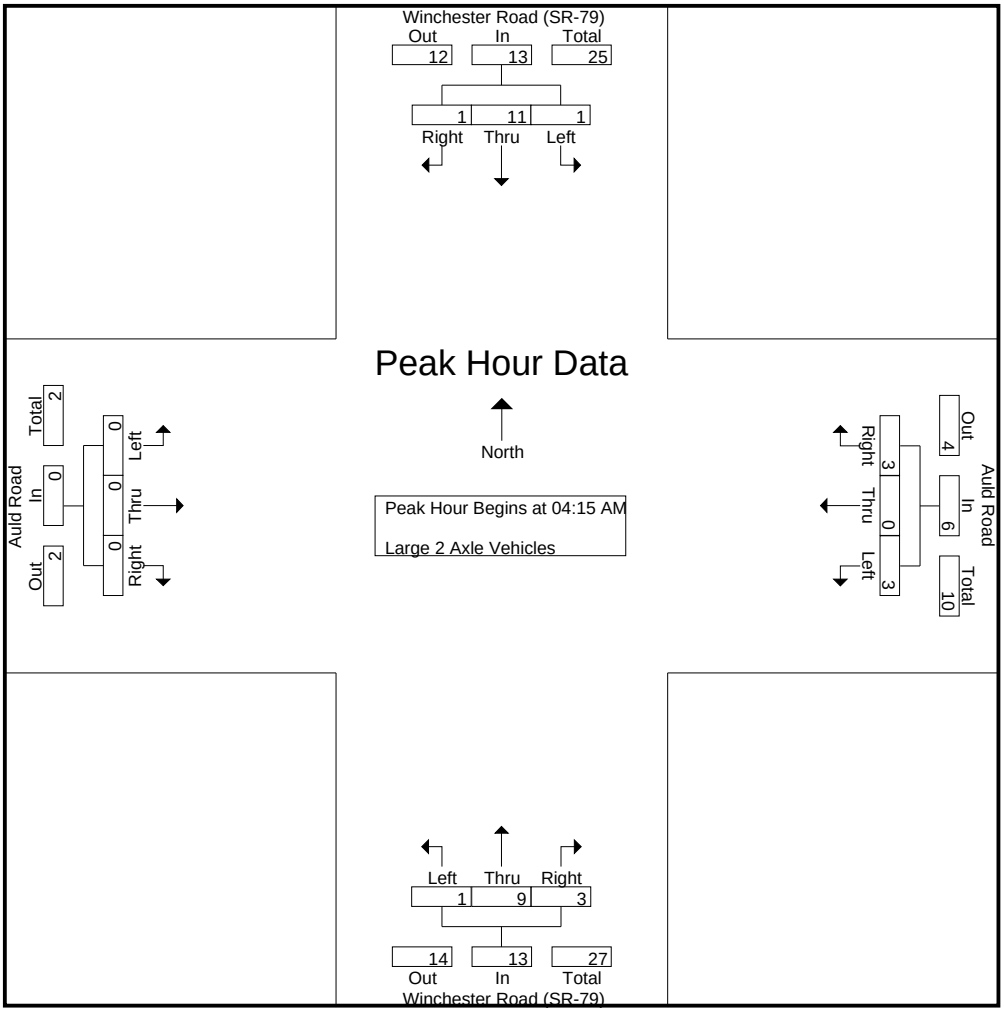

Peak Hour Analysis From 04:15 AM to 05:00 AM - Peak 1 of 1

Peak Hour for Each Approach Begins at:

	04:15 AM				04:15 AM				04:15 AM				04:15 AM			
+0 mins.	**1**	2	0	3	1	0	**2**	**3**	**1**	2	**1**	4	0	0	0	0
+15 mins.	0	**5**	0	**5**	**2**	0	0	2	0	1	0	1	0	0	0	0
+30 mins.	0	2	0	2	0	0	1	1	0	**4**	1	**5**	0	0	0	0
+45 mins.	0	2	**1**	3	0	0	0	0	0	2	1	3	0	0	0	0
Total Volume	1	11	1	13	3	0	3	6	1	9	3	13	0	0	0	0
% App. Total	7.7	84.6	7.7		50	0	50		7.7	69.2	23.1		0	0	0	
PHF	.250	.550	.250	.650	.375	.000	.375	.500	.250	.563	.750	.650	.000	.000	.000	.000

Counts Unlimited Inc.
PO Box 1178
Corona, CA 92878
(951) 268-6268

County of Riverside
N/S: Winchester Road (SR-79)
E/W: Auld Road
Weather: Sunny

File Name : CRVWIAUPM
Site Code : 10236064
Start Date : 11/4/2010
Page No : 1

Groups Printed- 3 Axle Vehicles

	Winchester Road (SR-79) Southbound				Auld Road Westbound				Winchester Road (SR-79) Northbound				Auld Road Eastbound				
Start Time	Left	Thru	Right	App. Total	Left	Thru	Right	App. Total	Left	Thru	Right	App. Total	Left	Thru	Right	App. Total	Int. Total
04:00 AM	0	0	0	0	0	0	0	0	0	0	0	0	0	0	0	0	0
04:15 AM	0	2	1	3	0	0	0	0	0	1	0	1	0	0	0	0	4
04:30 AM	0	0	0	0	0	0	0	0	0	0	0	0	0	0	0	0	0
04:45 AM	0	0	0	0	0	0	0	0	0	0	0	0	0	0	0	0	0
Total	0	2	1	3	0	0	0	0	0	1	0	1	0	0	0	0	4
05:00 AM	0	0	0	0	0	0	0	0	0	0	0	0	0	0	0	0	0
05:15 AM	0	0	0	0	0	0	0	0	0	1	0	1	0	0	0	0	1
05:30 AM	0	0	0	0	0	0	0	0	0	0	0	0	0	0	0	0	0
05:45 AM	0	0	0	0	0	0	0	0	0	0	0	0	0	0	0	0	0
Total	0	0	0	0	0	0	0	0	0	1	0	1	0	0	0	0	1
Grand Total	0	2	1	3	0	0	0	0	0	2	0	2	0	0	0	0	5
Apprch %	0	66.7	33.3		0	0	0		0	100	0		0	0	0		
Total %	0	40	20	60	0	0	0	0	0	40	0	40	0	0	0	0	

	Winchester Road (SR-79) Southbound				Auld Road Westbound				Winchester Road (SR-79) Northbound				Auld Road Eastbound				
Start Time	Left	Thru	Right	App. Total	Left	Thru	Right	App. Total	Left	Thru	Right	App. Total	Left	Thru	Right	App. Total	Int. Total
Peak Hour Analysis From 04:15 AM to 05:00 AM - Peak 1 of 1																	
Peak Hour for Entire Intersection Begins at 04:15 AM																	
04:15 AM	0	**2**	**1**	**3**	0	0	0	0	0	**1**	0	**1**	0	0	0	0	**4**
04:30 AM	0	0	0	0	0	0	0	0	0	0	0	0	0	0	0	0	0
04:45 AM	0	0	0	0	0	0	0	0	0	0	0	0	0	0	0	0	0
05:00 AM	0	0	0	0	0	0	0	0	0	0	0	0	0	0	0	0	0
Total Volume	0	2	1	3	0	0	0	0	0	1	0	1	0	0	0	0	4
% App. Total	0	66.7	33.3		0	0	0		0	100	0		0	0	0		
PHF	.000	.250	.250	.250	.000	.000	.000	.000	.000	.250	.000	.250	.000	.000	.000	.000	.250

Counts Unlimited Inc.
PO Box 1178
Corona, CA 92878
(951) 268-6268

County of Riverside
N/S: Winchester Road (SR-79)
E/W: Auld Road
Weather: Sunny

File Name : CRVWIAUPM
Site Code : 10236064
Start Date : 11/4/2010
Page No : 2

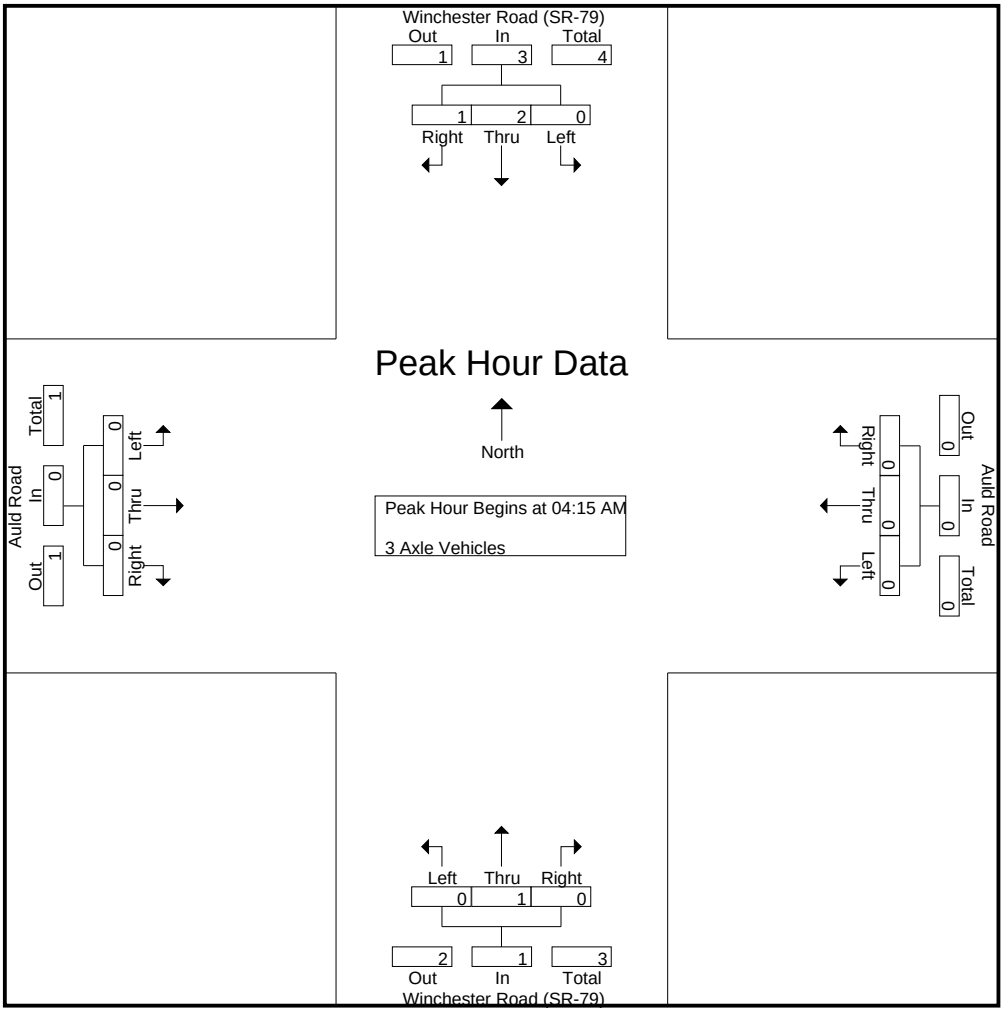

Peak Hour Analysis From 04:15 AM to 05:00 AM - Peak 1 of 1

Peak Hour for Each Approach Begins at:

	04:15 AM				04:15 AM				04:15 AM				04:15 AM			
+0 mins.	0	**2**	**1**	**3**	0	0	0	0	0	**1**	0	**1**	0	0	0	0
+15 mins.	0	0	0	0	0	0	0	0	0	0	0	0	0	0	0	0
+30 mins.	0	0	0	0	0	0	0	0	0	0	0	0	0	0	0	0
+45 mins.	0	0	0	0	0	0	0	0	0	0	0	0	0	0	0	0
Total Volume	0	2	1	3	0	0	0	0	0	1	0	1	0	0	0	0
% App. Total	0	66.7	33.3		0	0	0		0	100	0		0	0	0	
PHF	.000	.250	.250	.250	.000	.000	.000	.000	.000	.250	.000	.250	.000	.000	.000	.000

Counts Unlimited Inc.
PO Box 1178
Corona, CA 92878
(951) 268-6268

County of Riverside
N/S: Winchester Road (SR-79)
E/W: Auld Road
Weather: Sunny

File Name : CRVWIAUPM
Site Code : 10236064
Start Date : 11/4/2010
Page No : 1

Groups Printed- 4+ Axle Trucks

	Winchester Road (SR-79) Southbound				Auld Road Westbound				Winchester Road (SR-79) Northbound				Auld Road Eastbound				
Start Time	Left	Thru	Right	App. Total	Left	Thru	Right	App. Total	Left	Thru	Right	App. Total	Left	Thru	Right	App. Total	Int. Total
04:00 AM	0	0	0	0	0	0	0	0	0	0	0	0	0	0	0	0	0
04:15 AM	0	0	0	0	0	0	0	0	0	1	0	1	0	0	0	0	1
04:30 AM	0	1	0	1	0	0	0	0	0	0	0	0	0	0	0	0	1
04:45 AM	0	0	0	0	0	0	0	0	0	1	0	1	0	0	0	0	1
Total	0	1	0	1	0	0	0	0	0	2	0	2	0	0	0	0	3
05:00 AM	0	0	0	0	0	0	0	0	0	0	0	0	0	0	0	0	0
05:15 AM	0	0	0	0	0	0	0	0	0	0	0	0	0	0	0	0	0
05:30 AM	0	0	0	0	0	0	0	0	0	0	0	0	0	0	0	0	0
05:45 AM	0	0	0	0	0	0	0	0	0	0	0	0	0	0	0	0	0
Total	0	0	0	0	0	0	0	0	0	0	0	0	0	0	0	0	0
Grand Total	0	1	0	1	0	0	0	0	0	2	0	2	0	0	0	0	3
Apprch %	0	100	0		0	0	0		0	100	0		0	0	0		
Total %	0	33.3	0	33.3	0	0	0	0	0	66.7	0	66.7	0	0	0	0	

	Winchester Road (SR-79) Southbound				Auld Road Westbound				Winchester Road (SR-79) Northbound				Auld Road Eastbound				
Start Time	Left	Thru	Right	App. Total	Left	Thru	Right	App. Total	Left	Thru	Right	App. Total	Left	Thru	Right	App. Total	Int. Total
Peak Hour Analysis From 04:15 AM to 05:00 AM - Peak 1 of 1																	
Peak Hour for Entire Intersection Begins at 04:15 AM																	
04:15 AM	0	0	0	0	0	0	0	0	0	**1**	0	**1**	0	0	0	0	**1**
04:30 AM	0	**1**	0	**1**	0	0	0	0	0	0	0	0	0	0	0	0	1
04:45 AM	0	0	0	0	0	0	0	0	0	1	0	1	0	0	0	0	1
05:00 AM	0	0	0	0	0	0	0	0	0	0	0	0	0	0	0	0	0
Total Volume	0	1	0	1	0	0	0	0	0	2	0	2	0	0	0	0	3
% App. Total	0	100	0		0	0	0		0	100	0		0	0	0		
PHF	.000	.250	.000	.250	.000	.000	.000	.000	.000	.500	.000	.500	.000	.000	.000	.000	.750

Counts Unlimited Inc.
PO Box 1178
Corona, CA 92878
(951) 268-6268

County of Riverside
N/S: Winchester Road (SR-79)
E/W: Auld Road
Weather: Sunny

File Name : CRVWIAUPM
Site Code : 10236064
Start Date : 11/4/2010
Page No : 2

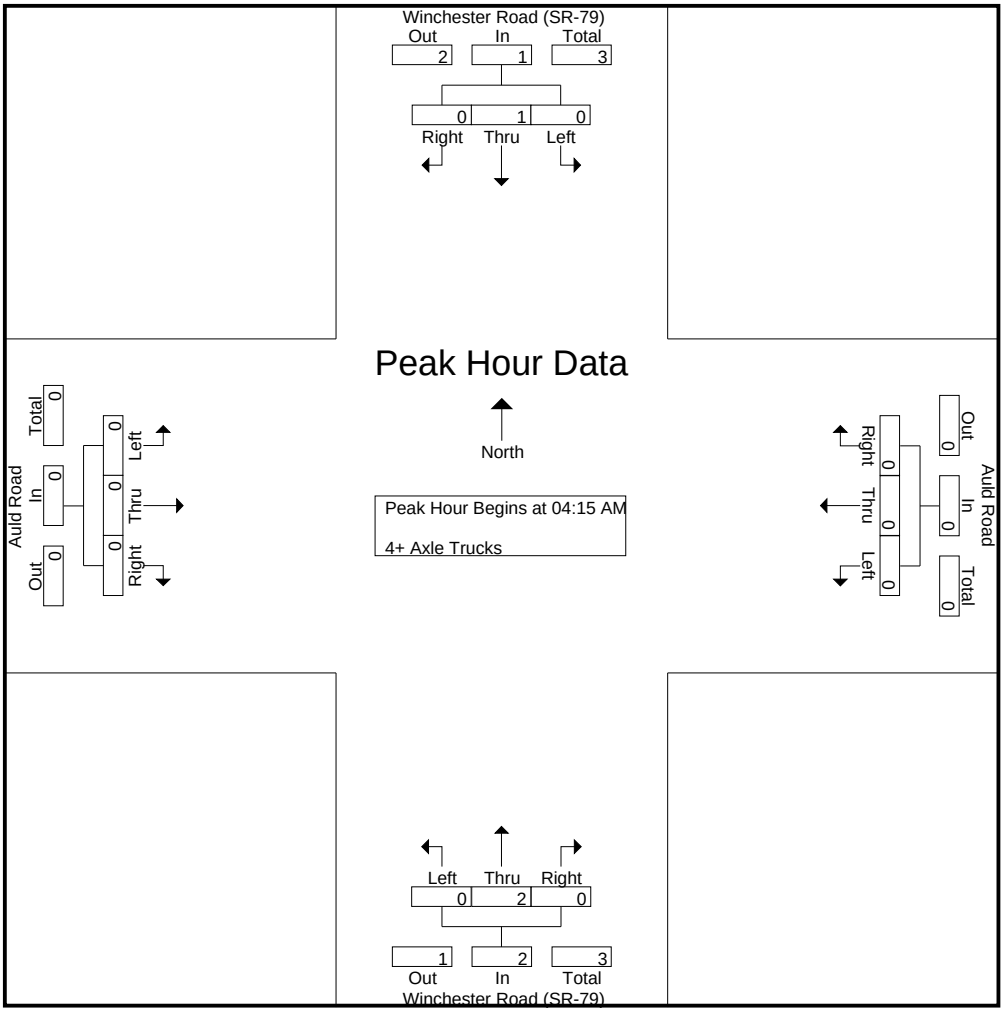

Peak Hour Analysis From 04:15 AM to 05:00 AM - Peak 1 of 1

Peak Hour for Each Approach Begins at:

	04:15 AM				04:15 AM				04:15 AM				04:15 AM			
+0 mins.	0	0	0	0	0	0	0	0	0	**1**	0	**1**	0	0	0	0
+15 mins.	0	**1**	0	**1**	0	0	0	0	0	0	0	0	0	0	0	0
+30 mins.	0	0	0	0	0	0	0	0	0	1	0	1	0	0	0	0
+45 mins.	0	0	0	0	0	0	0	0	0	0	0	0	0	0	0	0
Total Volume	0	1	0	1	0	0	0	0	0	2	0	2	0	0	0	0
% App. Total	0	100	0		0	0	0		0	100	0		0	0	0	
PHF	.000	.250	.000	.250	.000	.000	.000	.000	.000	.500	.000	.500	.000	.000	.000	.000

Counts Unlimited Inc.
PO Box 1178
Corona, CA 92878
(951) 268-6268

City of Murrieta
N/S: Clinton Keith Road
E/W: Calle Del Oso Oro/Bear Creek Drive
Weather: Sunny

File Name : MURCKCDOAM
Site Code : 10266139
Start Date : 12/1/2010
Page No : 1

Groups Printed- Total Volume

	Clinton Keith Road Southbound				Calle Del Oso Oro Westbound				Clinton Keith Road Northbound				Bear Creek Drive Eastbound				
Start Time	Left	Thru	Right	App. Total	Left	Thru	Right	App. Total	Left	Thru	Right	App. Total	Left	Thru	Right	App. Total	Int. Total
07:00 AM	1	35	17	53	6	0	15	21	1	52	3	56	10	1	0	11	141
07:15 AM	2	31	13	46	5	0	23	28	0	68	18	86	10	1	0	11	171
07:30 AM	4	30	13	47	3	4	21	28	0	71	12	83	17	2	0	19	177
07:45 AM	14	42	26	82	1	4	21	26	1	64	17	82	8	4	1	13	203
Total	21	138	69	228	15	8	80	103	2	255	50	307	45	8	1	54	692
08:00 AM	5	38	22	65	12	3	13	28	1	68	31	100	13	5	0	18	211
08:15 AM	10	35	14	59	19	5	15	39	0	62	65	127	12	13	0	25	250
08:30 AM	9	39	18	66	17	11	22	50	0	67	31	98	20	15	1	36	250
08:45 AM	7	45	21	73	16	7	14	37	1	65	28	94	24	4	1	29	233
Total	31	157	75	263	64	26	64	154	2	262	155	419	69	37	2	108	944
Grand Total	52	295	144	491	79	34	144	257	4	517	205	726	114	45	3	162	1636
Apprch %	10.6	60.1	29.3		30.7	13.2	56		0.6	71.2	28.2		70.4	27.8	1.9		
Total %	3.2	18	8.8	30	4.8	2.1	8.8	15.7	0.2	31.6	12.5	44.4	7	2.8	0.2	9.9	

	Clinton Keith Road Southbound				Calle Del Oso Oro Westbound				Clinton Keith Road Northbound				Bear Creek Drive Eastbound				
Start Time	Left	Thru	Right	App. Total	Left	Thru	Right	App. Total	Left	Thru	Right	App. Total	Left	Thru	Right	App. Total	Int. Total
Peak Hour Analysis From 07:00 AM to 08:45 AM - Peak 1 of 1																	
Peak Hour for Entire Intersection Begins at 08:00 AM																	
08:00 AM	5	38	**22**	65	12	3	13	28	**1**	**68**	31	100	13	5	0	18	211
08:15 AM	**10**	35	14	59	**19**	5	15	39	0	62	**65**	**127**	12	13	0	25	**250**
08:30 AM	9	39	18	66	17	**11**	**22**	**50**	0	67	31	98	20	**15**	**1**	**36**	250
08:45 AM	7	**45**	21	**73**	16	7	14	37	1	65	28	94	**24**	4	1	29	233
Total Volume	31	157	75	263	64	26	64	154	2	262	155	419	69	37	2	108	944
% App. Total	11.8	59.7	28.5		41.6	16.9	41.6		0.5	62.5	37		63.9	34.3	1.9		
PHF	.775	.872	.852	.901	.842	.591	.727	.770	.500	.963	.596	.825	.719	.617	.500	.750	.944

Counts Unlimited Inc.
PO Box 1178
Corona, CA 92878
(951) 268-6268

City of Murrieta
N/S: Clinton Keith Road
E/W: Calle Del Oso Oro/Bear Creek Drive
Weather: Sunny

File Name : MURCKCDOAM
Site Code : 10266139
Start Date : 12/1/2010
Page No : 2

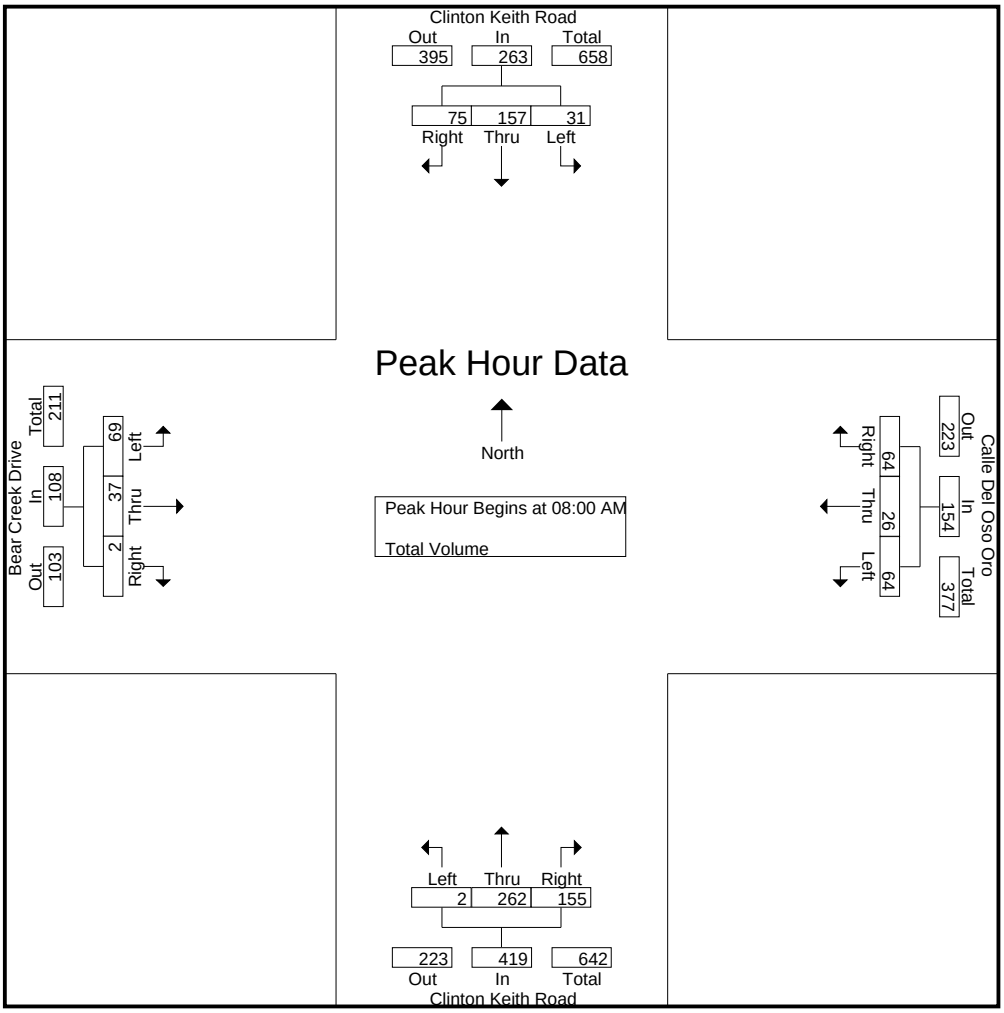

Peak Hour Analysis From 07:00 AM to 08:45 AM - Peak 1 of 1
Peak Hour for Each Approach Begins at:

	07:45 AM				08:00 AM				08:00 AM				08:00 AM			
+0 mins.	**14**	**42**	**26**	**82**	12	3	13	28	**1**	**68**	31	100	13	5	0	18
+15 mins.	5	38	22	65	**19**	5	15	39	0	62	**65**	**127**	12	13	0	25
+30 mins.	10	35	14	59	17	**11**	**22**	**50**	0	67	31	98	20	**15**	**1**	**36**
+45 mins.	9	39	18	66	16	7	14	37	1	65	28	94	**24**	4	1	29
Total Volume	38	154	80	272	64	26	64	154	2	262	155	419	69	37	2	108
% App. Total	14	56.6	29.4		41.6	16.9	41.6		0.5	62.5	37		63.9	34.3	1.9	
PHF	.679	.917	.769	.829	.842	.591	.727	.770	.500	.963	.596	.825	.719	.617	.500	.750

Counts Unlimited Inc.
PO Box 1178
Corona, CA 92878
(951) 268-6268

City of Murrieta
N/S: Clinton Keith Road
E/W: Calle Del Oso Oro/Bear Creek Drive
Weather: Sunny

File Name : MURCKCDOPM
Site Code : 10266139
Start Date : 12/1/2010
Page No : 1

Groups Printed- Total Volume

	Clinton Keith Road Southbound				Calle Del Oso Oro Westbound				Clinton Keith Road Northbound				Bear Creek Drive Eastbound				
Start Time	Left	Thru	Right	App. Total	Left	Thru	Right	App. Total	Left	Thru	Right	App. Total	Left	Thru	Right	App. Total	Int. Total
04:00 PM	18	57	24	99	24	6	11	41	1	70	11	82	13	2	0	15	237
04:15 PM	18	61	17	96	15	14	10	39	0	60	10	70	19	4	1	24	229
04:30 PM	17	58	30	105	20	8	8	36	0	73	8	81	19	3	2	24	246
04:45 PM	10	51	30	91	14	10	17	41	0	57	7	64	16	5	0	21	217
Total	63	227	101	391	73	38	46	157	1	260	36	297	67	14	3	84	929
05:00 PM	38	63	28	129	26	5	18	49	1	65	10	76	13	10	0	23	277
05:15 PM	17	49	27	93	23	7	15	45	0	52	8	60	12	9	1	22	220
05:30 PM	18	62	25	105	20	7	7	34	3	41	10	54	9	1	1	11	204
05:45 PM	10	67	34	111	15	7	9	31	10	42	14	66	7	3	0	10	218
Total	83	241	114	438	84	26	49	159	14	200	42	256	41	23	2	66	919
Grand Total	146	468	215	829	157	64	95	316	15	460	78	553	108	37	5	150	1848
Apprch %	17.6	56.5	25.9		49.7	20.3	30.1		2.7	83.2	14.1		72	24.7	3.3		
Total %	7.9	25.3	11.6	44.9	8.5	3.5	5.1	17.1	0.8	24.9	4.2	29.9	5.8	2	0.3	8.1	

	Clinton Keith Road Southbound				Calle Del Oso Oro Westbound				Clinton Keith Road Northbound				Bear Creek Drive Eastbound				
Start Time	Left	Thru	Right	App. Total	Left	Thru	Right	App. Total	Left	Thru	Right	App. Total	Left	Thru	Right	App. Total	Int. Total
Peak Hour Analysis From 04:00 PM to 05:45 PM - Peak 1 of 1																	
Peak Hour for Entire Intersection Begins at 04:15 PM																	
04:15 PM	18	61	17	96	15	**14**	10	39	0	60	**10**	70	**19**	4	1	**24**	229
04:30 PM	17	58	**30**	105	20	8	8	36	0	**73**	8	**81**	19	3	**2**	24	246
04:45 PM	10	51	30	91	14	10	17	41	0	57	7	64	16	5	0	21	217
05:00 PM	**38**	**63**	28	**129**	**26**	5	**18**	**49**	**1**	65	10	76	13	**10**	0	23	**277**
Total Volume	83	233	105	421	75	37	53	165	1	255	35	291	67	22	3	92	969
% App. Total	19.7	55.3	24.9		45.5	22.4	32.1		0.3	87.6	12		72.8	23.9	3.3		
PHF	.546	.925	.875	.816	.721	.661	.736	.842	.250	.873	.875	.898	.882	.550	.375	.958	.875

Counts Unlimited Inc.
PO Box 1178
Corona, CA 92878
(951) 268-6268

City of Murrieta
N/S: Clinton Keith Road
E/W: Calle Del Oso Oro/Bear Creek Drive
Weather: Sunny

File Name : MURCKCDOPM
Site Code : 10266139
Start Date : 12/1/2010
Page No : 2

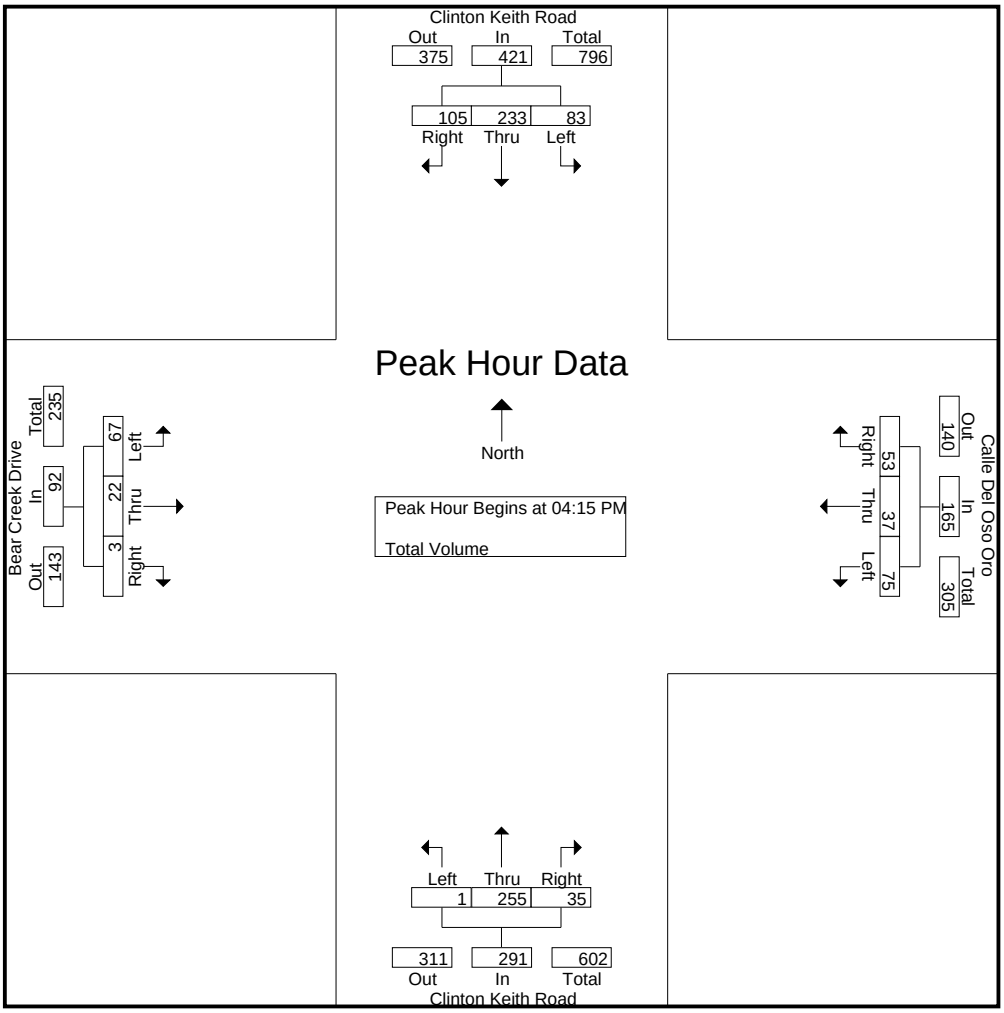

Peak Hour Analysis From 04:00 PM to 05:45 PM - Peak 1 of 1
Peak Hour for Each Approach Begins at:

	05:00 PM				04:30 PM				04:00 PM				04:15 PM			
+0 mins.	**38**	63	28	**129**	20	8	8	36	**1**	70	**11**	**82**	**19**	4	1	**24**
+15 mins.	17	49	27	93	14	**10**	17	41	0	60	10	70	19	3	**2**	24
+30 mins.	18	62	25	105	**26**	5	**18**	**49**	0	**73**	8	81	16	5	0	21
+45 mins.	10	**67**	**34**	111	23	7	15	45	0	57	7	64	13	**10**	0	23
Total Volume	83	241	114	438	83	30	58	171	1	260	36	297	67	22	3	92
% App. Total	18.9	55	26		48.5	17.5	33.9		0.3	87.5	12.1		72.8	23.9	3.3	
PHF	.546	.899	.838	.849	.798	.750	.806	.872	.250	.890	.818	.905	.882	.550	.375	.958

Counts Unlimited Inc.
PO Box 1178
Corona, CA 92878
(951) 268-6268

City of Murrieta
N/S: Jefferson Avenue
E/W: Nutmeg Street
Weather: Sunny

File Name : MURJENUAM
Site Code : 10266111
Start Date : 11/30/2010
Page No : 1

Groups Printed- Total Volume

	Jefferson Avenue Southbound				Nutmeg Street Westbound				Jefferson Avenue Northbound				Nutmeg Street Eastbound				
Start Time	Left	Thru	Right	App. Total	Left	Thru	Right	App. Total	Left	Thru	Right	App. Total	Left	Thru	Right	App. Total	Int. Total
07:00 AM	2	16	4	22	93	89	7	189	10	8	33	51	15	39	27	81	343
07:15 AM	7	19	1	27	81	56	1	138	15	9	66	90	1	39	43	83	338
07:30 AM	5	16	1	22	32	27	1	60	21	9	63	93	2	60	27	89	264
07:45 AM	5	20	1	26	46	29	1	76	14	8	16	38	0	47	33	80	220
Total	19	71	7	97	252	201	10	463	60	34	178	272	18	185	130	333	1165
08:00 AM	3	23	0	26	66	46	4	116	24	8	23	55	1	41	30	72	269
08:15 AM	4	30	4	38	60	60	11	131	22	9	27	58	5	50	42	97	324
08:30 AM	2	26	1	29	82	75	4	161	18	7	45	70	5	47	59	111	371
08:45 AM	2	14	2	18	53	69	3	125	16	8	41	65	4	43	47	94	302
Total	11	93	7	111	261	250	22	533	80	32	136	248	15	181	178	374	1266
Grand Total	30	164	14	208	513	451	32	996	140	66	314	520	33	366	308	707	2431
Apprch %	14.4	78.8	6.7		51.5	45.3	3.2		26.9	12.7	60.4		4.7	51.8	43.6		
Total %	1.2	6.7	0.6	8.6	21.1	18.6	1.3	41	5.8	2.7	12.9	21.4	1.4	15.1	12.7	29.1	

	Jefferson Avenue Southbound				Nutmeg Street Westbound				Jefferson Avenue Northbound				Nutmeg Street Eastbound				
Start Time	Left	Thru	Right	App. Total	Left	Thru	Right	App. Total	Left	Thru	Right	App. Total	Left	Thru	Right	App. Total	Int. Total
Peak Hour Analysis From 07:00 AM to 08:45 AM - Peak 1 of 1																	
Peak Hour for Entire Intersection Begins at 08:00 AM																	
08:00 AM	3	23	0	26	66	46	4	116	**24**	8	23	55	1	41	30	72	269
08:15 AM	**4**	**30**	**4**	**38**	60	60	**11**	131	22	**9**	27	58	**5**	**50**	42	97	324
08:30 AM	2	26	1	29	**82**	**75**	4	**161**	18	7	**45**	**70**	5	47	**59**	**111**	**371**
08:45 AM	2	14	2	18	53	69	3	125	16	8	41	65	4	43	47	94	302
Total Volume	11	93	7	111	261	250	22	533	80	32	136	248	15	181	178	374	1266
% App. Total	9.9	83.8	6.3		49	46.9	4.1		32.3	12.9	54.8		4	48.4	47.6		
PHF	.688	.775	.438	.730	.796	.833	.500	.828	.833	.889	.756	.886	.750	.905	.754	.842	.853

Counts Unlimited Inc.
PO Box 1178
Corona, CA 92878
(951) 268-6268

City of Murrieta
N/S: Jefferson Avenue
E/W: Nutmeg Street
Weather: Sunny

File Name : MURJENUAM
Site Code : 10266111
Start Date : 11/30/2010
Page No : 2

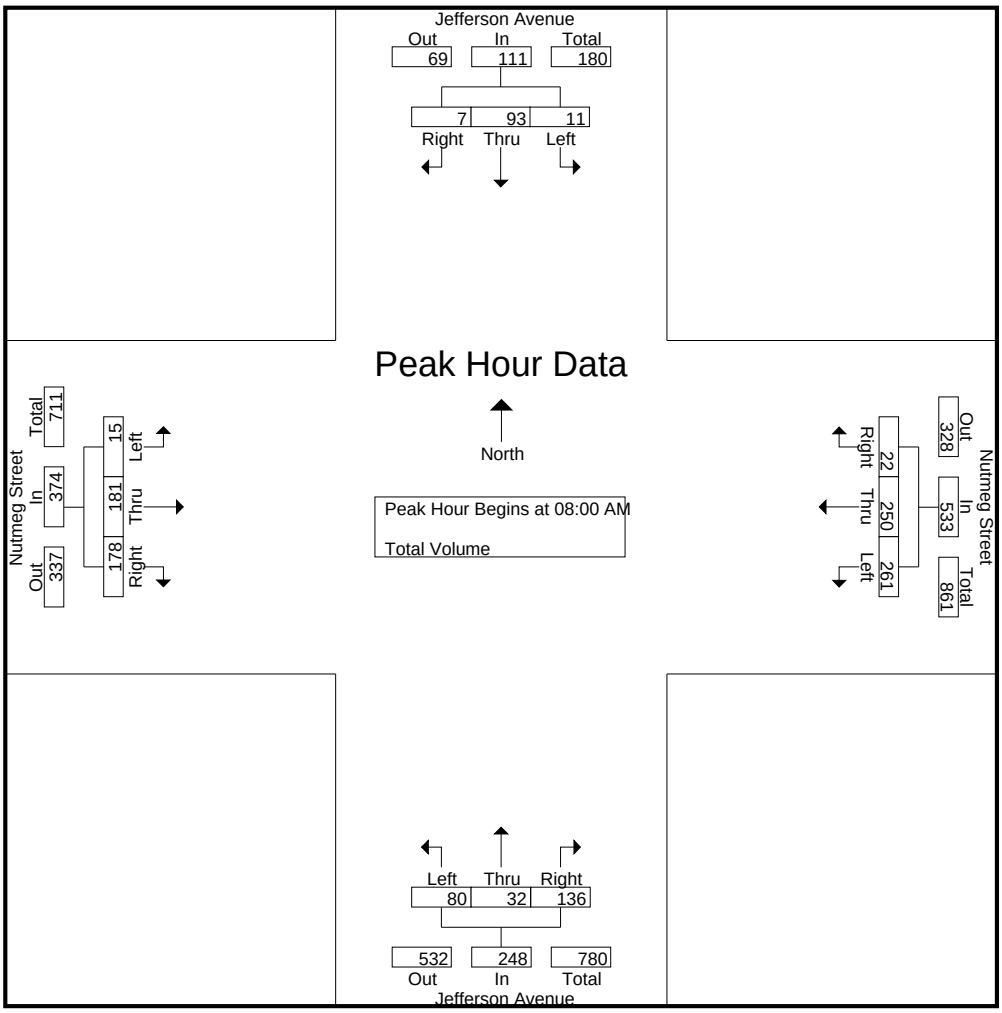

Peak Hour Analysis From 07:00 AM to 08:45 AM - Peak 1 of 1

Peak Hour for Each Approach Begins at:

	07:45 AM				08:00 AM				07:15 AM				08:00 AM			
+0 mins.	**5**	20	1	26	66	46	4	116	15	**9**	**66**	90	1	41	30	72
+15 mins.	3	23	0	26	60	60	**11**	131	21	9	63	**93**	**5**	**50**	42	97
+30 mins.	4	**30**	**4**	**38**	**82**	**75**	4	**161**	14	8	16	38	5	47	**59**	**111**
+45 mins.	2	26	1	29	53	69	3	125	**24**	8	23	55	4	43	47	94
Total Volume	14	99	6	119	261	250	22	533	74	34	168	276	15	181	178	374
% App. Total	11.8	83.2	5		49	46.9	4.1		26.8	12.3	60.9		4	48.4	47.6	
PHF	.700	.825	.375	.783	.796	.833	.500	.828	.771	.944	.636	.742	.750	.905	.754	.842

Counts Unlimited Inc.
PO Box 1178
Corona, CA 92878
(951) 268-6268

City of Murrieta
N/S: Jefferson Avenue
E/W: Nutmeg Street
Weather: Sunny

File Name : MURJENUPM
Site Code : 10266111
Start Date : 11/30/2010
Page No : 1

Groups Printed- Total Volume

	Jefferson Avenue Southbound				Nutmeg Street Westbound				Jefferson Avenue Northbound				Nutmeg Street Eastbound				
Start Time	Left	Thru	Right	App. Total	Left	Thru	Right	App. Total	Left	Thru	Right	App. Total	Left	Thru	Right	App. Total	Int. Total
04:00 PM	3	8	2	13	34	46	5	85	53	13	46	112	1	51	29	81	291
04:15 PM	2	11	2	15	38	51	4	93	48	27	48	123	4	45	27	76	307
04:30 PM	4	14	4	22	40	58	9	107	49	21	43	113	2	45	23	70	312
04:45 PM	5	9	0	14	31	54	4	89	54	22	54	130	3	40	24	67	300
Total	14	42	8	64	143	209	22	374	204	83	191	478	10	181	103	294	1210
05:00 PM	2	10	3	15	23	56	8	87	56	23	45	124	3	51	26	80	306
05:15 PM	3	11	2	16	31	59	8	98	62	18	53	133	3	43	21	67	314
05:30 PM	7	15	2	24	32	42	7	81	52	24	29	105	1	60	10	71	281
05:45 PM	8	9	1	18	27	56	7	90	57	28	38	123	0	46	32	78	309
Total	20	45	8	73	113	213	30	356	227	93	165	485	7	200	89	296	1210
Grand Total	34	87	16	137	256	422	52	730	431	176	356	963	17	381	192	590	2420
Apprch %	24.8	63.5	11.7		35.1	57.8	7.1		44.8	18.3	37		2.9	64.6	32.5		
Total %	1.4	3.6	0.7	5.7	10.6	17.4	2.1	30.2	17.8	7.3	14.7	39.8	0.7	15.7	7.9	24.4	

	Jefferson Avenue Southbound				Nutmeg Street Westbound				Jefferson Avenue Northbound				Nutmeg Street Eastbound				
Start Time	Left	Thru	Right	App. Total	Left	Thru	Right	App. Total	Left	Thru	Right	App. Total	Left	Thru	Right	App. Total	Int. Total
Peak Hour Analysis From 04:00 PM to 05:45 PM - Peak 1 of 1																	
Peak Hour for Entire Intersection Begins at 04:30 PM																	
04:30 PM	4	**14**	**4**	**22**	**40**	58	**9**	**107**	49	21	43	113	2	45	23	70	312
04:45 PM	**5**	9	0	14	31	54	4	89	54	22	**54**	130	**3**	40	24	67	300
05:00 PM	2	10	3	15	23	56	8	87	56	**23**	45	124	3	**51**	**26**	**80**	306
05:15 PM	3	11	2	16	31	**59**	8	98	**62**	18	53	**133**	3	43	21	67	**314**
Total Volume	14	44	9	67	125	227	29	381	221	84	195	500	11	179	94	284	1232
% App. Total	20.9	65.7	13.4		32.8	59.6	7.6		44.2	16.8	39		3.9	63	33.1		
PHF	.700	.786	.563	.761	.781	.962	.806	.890	.891	.913	.903	.940	.917	.877	.904	.888	.981

Counts Unlimited Inc.
PO Box 1178
Corona, CA 92878
(951) 268-6268

City of Murrieta
N/S: Jefferson Avenue
E/W: Nutmeg Street
Weather: Sunny

File Name : MURJENUPM
Site Code : 10266111
Start Date : 11/30/2010
Page No : 2

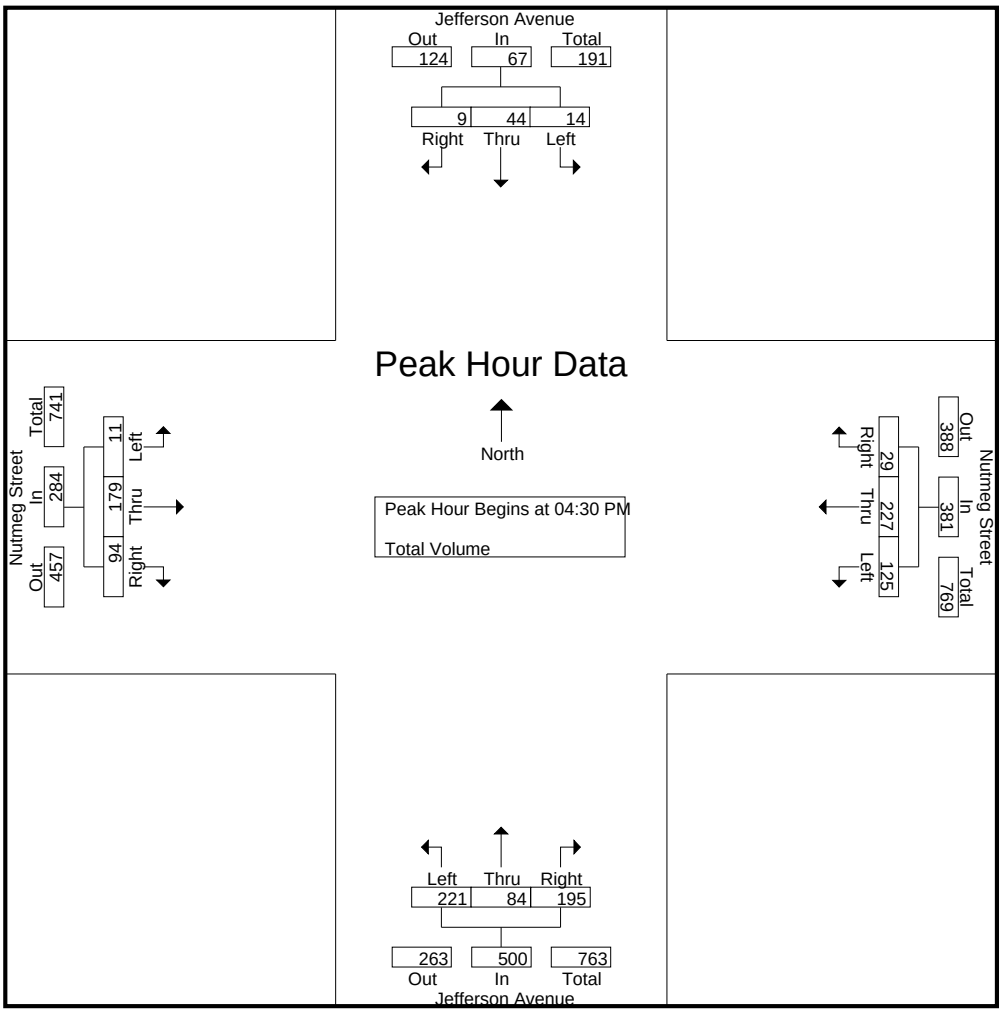

Peak Hour Analysis From 04:00 PM to 05:45 PM - Peak 1 of 1

Peak Hour for Each Approach Begins at:

	05:00 PM				04:30 PM				04:30 PM				05:00 PM			
+0 mins.	2	10	**3**	15	**40**	58	**9**	**107**	49	21	43	113	**3**	51	26	**80**
+15 mins.	3	11	2	16	31	54	4	89	54	22	**54**	130	3	43	21	67
+30 mins.	7	**15**	2	**24**	23	56	8	87	56	**23**	45	124	1	**60**	10	71
+45 mins.	**8**	9	1	18	31	**59**	8	98	**62**	18	53	**133**	0	46	**32**	78
Total Volume	20	45	8	73	125	227	29	381	221	84	195	500	7	200	89	296
% App. Total	27.4	61.6	11		32.8	59.6	7.6		44.2	16.8	39		2.4	67.6	30.1	
PHF	.625	.750	.667	.760	.781	.962	.806	.890	.891	.913	.903	.940	.583	.833	.695	.925

Counts Unlimited Inc.
PO Box 1178
Corona, CA 92878
(951) 268-6268

City of Murrieta
N/S: Jefferson Avenue
E/W: Magnolia Street
Weather: Sunny

File Name : MURJEMAAM
Site Code : 10266131
Start Date : 11/30/2010
Page No : 1

Groups Printed- Total Volume

	Jefferson Avenue Southbound				Magnolia Street Westbound				Jefferson Avenue Northbound				Magnolia Street Eastbound				
Start Time	Left	Thru	Right	App. Total	Left	Thru	Right	App. Total	Left	Thru	Right	App. Total	Left	Thru	Right	App. Total	Int. Total
07:00 AM	2	83	101	186	2	2	1	5	20	27	0	47	41	3	22	66	304
07:15 AM	0	103	54	157	2	1	1	4	10	39	0	49	63	3	29	95	305
07:30 AM	0	85	9	94	1	0	2	3	11	48	0	59	33	1	20	54	210
07:45 AM	2	107	8	117	2	0	2	4	10	36	0	46	10	1	10	21	188
Total	4	378	172	554	7	3	6	16	51	150	0	201	147	8	81	236	1007
08:00 AM	1	107	27	135	8	1	0	9	15	38	4	57	15	0	11	26	227
08:15 AM	2	119	37	158	1	2	1	4	15	42	1	58	28	1	24	53	273
08:30 AM	1	118	52	171	4	1	0	5	14	41	0	55	45	2	18	65	296
08:45 AM	1	84	27	112	4	2	0	6	12	43	1	56	36	0	42	78	252
Total	5	428	143	576	17	6	1	24	56	164	6	226	124	3	95	222	1048
Grand Total	9	806	315	1130	24	9	7	40	107	314	6	427	271	11	176	458	2055
Apprch %	0.8	71.3	27.9		60	22.5	17.5		25.1	73.5	1.4		59.2	2.4	38.4		
Total %	0.4	39.2	15.3	55	1.2	0.4	0.3	1.9	5.2	15.3	0.3	20.8	13.2	0.5	8.6	22.3	

	Jefferson Avenue Southbound				Magnolia Street Westbound				Jefferson Avenue Northbound				Magnolia Street Eastbound				
Start Time	Left	Thru	Right	App. Total	Left	Thru	Right	App. Total	Left	Thru	Right	App. Total	Left	Thru	Right	App. Total	Int. Total
Peak Hour Analysis From 07:00 AM to 08:45 AM - Peak 1 of 1																	
Peak Hour for Entire Intersection Begins at 08:00 AM																	
08:00 AM	1	107	27	135	**8**	1	0	**9**	**15**	38	**4**	57	15	0	11	26	227
08:15 AM	**2**	**119**	37	158	1	**2**	**1**	4	15	42	1	**58**	28	1	24	53	273
08:30 AM	1	118	**52**	**171**	4	1	0	5	14	41	0	55	**45**	**2**	18	65	**296**
08:45 AM	1	84	27	112	4	2	0	6	12	**43**	1	56	36	0	**42**	**78**	252
Total Volume	5	428	143	576	17	6	1	24	56	164	6	226	124	3	95	222	1048
% App. Total	0.9	74.3	24.8		70.8	25	4.2		24.8	72.6	2.7		55.9	1.4	42.8		
PHF	.625	.899	.688	.842	.531	.750	.250	.667	.933	.953	.375	.974	.689	.375	.565	.712	.885

Counts Unlimited Inc.
PO Box 1178
Corona, CA 92878
(951) 268-6268

City of Murrieta
N/S: Jefferson Avenue
E/W: Magnolia Street
Weather: Sunny

File Name : MURJEMAAM
Site Code : 10266131
Start Date : 11/30/2010
Page No : 2

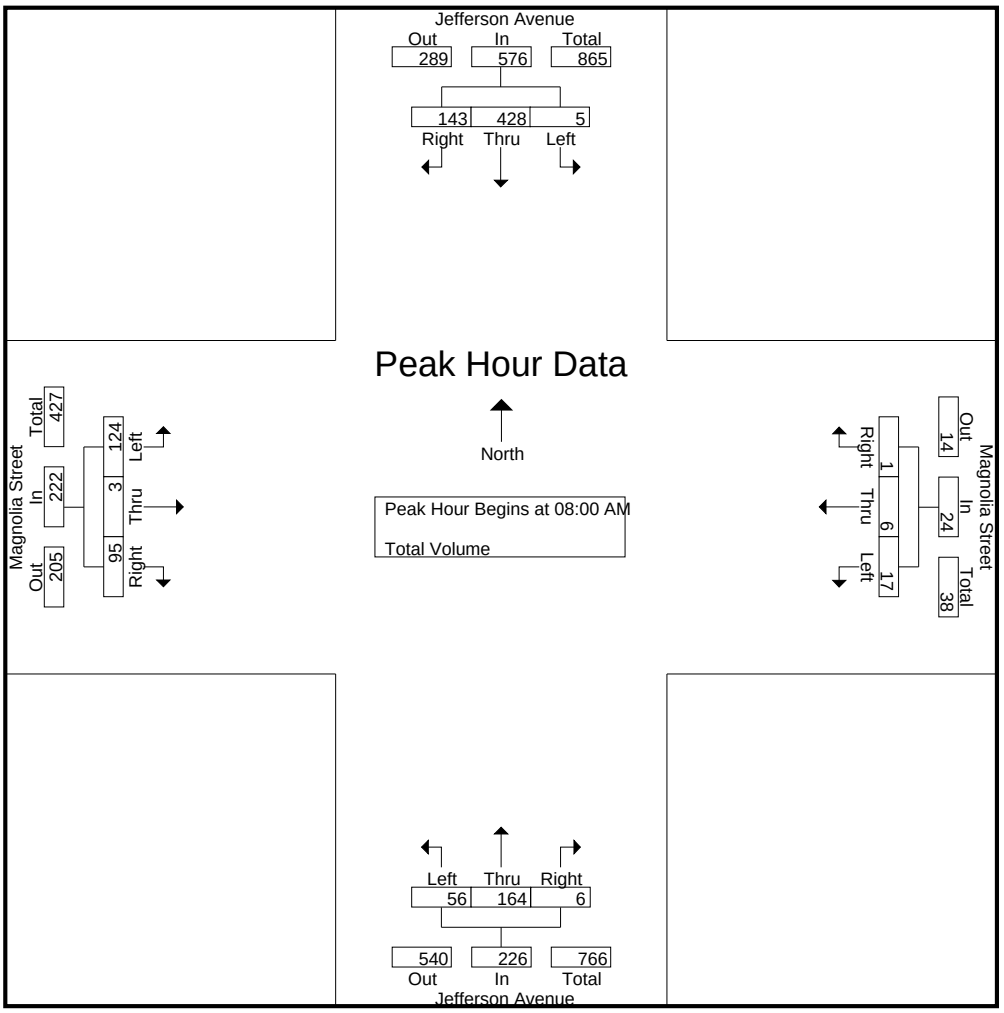

Peak Hour Analysis From 07:00 AM to 08:45 AM - Peak 1 of 1

Peak Hour for Each Approach Begins at:

	07:45 AM				08:00 AM				08:00 AM				07:00 AM			
+0 mins.	**2**	107	8	117	**8**	1	0	**9**	**15**	38	**4**	57	41	**3**	22	66
+15 mins.	1	107	27	135	1	**2**	**1**	4	15	42	1	**58**	**63**	3	**29**	**95**
+30 mins.	2	**119**	37	158	4	1	0	5	14	41	0	55	33	1	20	54
+45 mins.	1	118	**52**	**171**	4	2	0	6	12	**43**	1	56	10	1	10	21
Total Volume	6	451	124	581	17	6	1	24	56	164	6	226	147	8	81	236
% App. Total	1	77.6	21.3		70.8	25	4.2		24.8	72.6	2.7		62.3	3.4	34.3	
PHF	.750	.947	.596	.849	.531	.750	.250	.667	.933	.953	.375	.974	.583	.667	.698	.621

Counts Unlimited Inc.
PO Box 1178
Corona, CA 92878
(951) 268-6268

City of Murrieta
N/S: Jefferson Avenue
E/W: Magnolia Street
Weather: Sunny

File Name : MURJEMAPM
Site Code : 10266131
Start Date : 11/30/2010
Page No : 1

Groups Printed- Total Volume

	Jefferson Avenue Southbound				Magnolia Street Westbound				Jefferson Avenue Northbound				Magnolia Street Eastbound				
Start Time	Left	Thru	Right	App. Total	Left	Thru	Right	App. Total	Left	Thru	Right	App. Total	Left	Thru	Right	App. Total	Int. Total
04:00 PM	1	73	4	78	1	2	1	4	16	107	1	124	21	1	16	38	244
04:15 PM	1	63	14	78	1	0	2	3	18	110	0	128	18	2	14	34	243
04:30 PM	0	78	13	91	1	1	2	4	22	119	1	142	17	0	9	26	263
04:45 PM	2	62	9	73	1	0	0	1	28	124	0	152	14	0	7	21	247
Total	4	276	40	320	4	3	5	12	84	460	2	546	70	3	46	119	997
05:00 PM	2	63	10	75	3	3	3	9	18	117	4	139	23	2	9	34	257
05:15 PM	0	61	6	67	0	3	2	5	28	120	4	152	13	5	8	26	250
05:30 PM	1	55	7	63	1	3	0	4	20	109	2	131	7	2	9	18	216
05:45 PM	4	61	9	74	2	1	3	6	20	124	5	149	9	2	10	21	250
Total	7	240	32	279	6	10	8	24	86	470	15	571	52	11	36	99	973
Grand Total	11	516	72	599	10	13	13	36	170	930	17	1117	122	14	82	218	1970
Apprch %	1.8	86.1	12		27.8	36.1	36.1		15.2	83.3	1.5		56	6.4	37.6		
Total %	0.6	26.2	3.7	30.4	0.5	0.7	0.7	1.8	8.6	47.2	0.9	56.7	6.2	0.7	4.2	11.1	

	Jefferson Avenue Southbound				Magnolia Street Westbound				Jefferson Avenue Northbound				Magnolia Street Eastbound				
Start Time	Left	Thru	Right	App. Total	Left	Thru	Right	App. Total	Left	Thru	Right	App. Total	Left	Thru	Right	App. Total	Int. Total
Peak Hour Analysis From 04:00 PM to 05:45 PM - Peak 1 of 1																	
Peak Hour for Entire Intersection Begins at 04:30 PM																	
04:30 PM	0	**78**	**13**	**91**	1	1	2	4	22	119	1	142	17	0	**9**	26	**263**
04:45 PM	**2**	62	9	73	1	0	0	1	**28**	**124**	0	**152**	14	0	7	21	247
05:00 PM	2	63	10	75	**3**	**3**	**3**	**9**	18	117	**4**	139	**23**	2	9	**34**	257
05:15 PM	0	61	6	67	0	3	2	5	28	120	4	152	13	**5**	8	26	250
Total Volume	4	264	38	306	5	7	7	19	96	480	9	585	67	7	33	107	1017
% App. Total	1.3	86.3	12.4		26.3	36.8	36.8		16.4	82.1	1.5		62.6	6.5	30.8		
PHF	.500	.846	.731	.841	.417	.583	.583	.528	.857	.968	.563	.962	.728	.350	.917	.787	.967

Counts Unlimited Inc.
PO Box 1178
Corona, CA 92878
(951) 268-6268

City of Murrieta
N/S: Jefferson Avenue
E/W: Magnolia Street
Weather: Sunny

File Name : MURJEMAPM
Site Code : 10266131
Start Date : 11/30/2010
Page No : 2

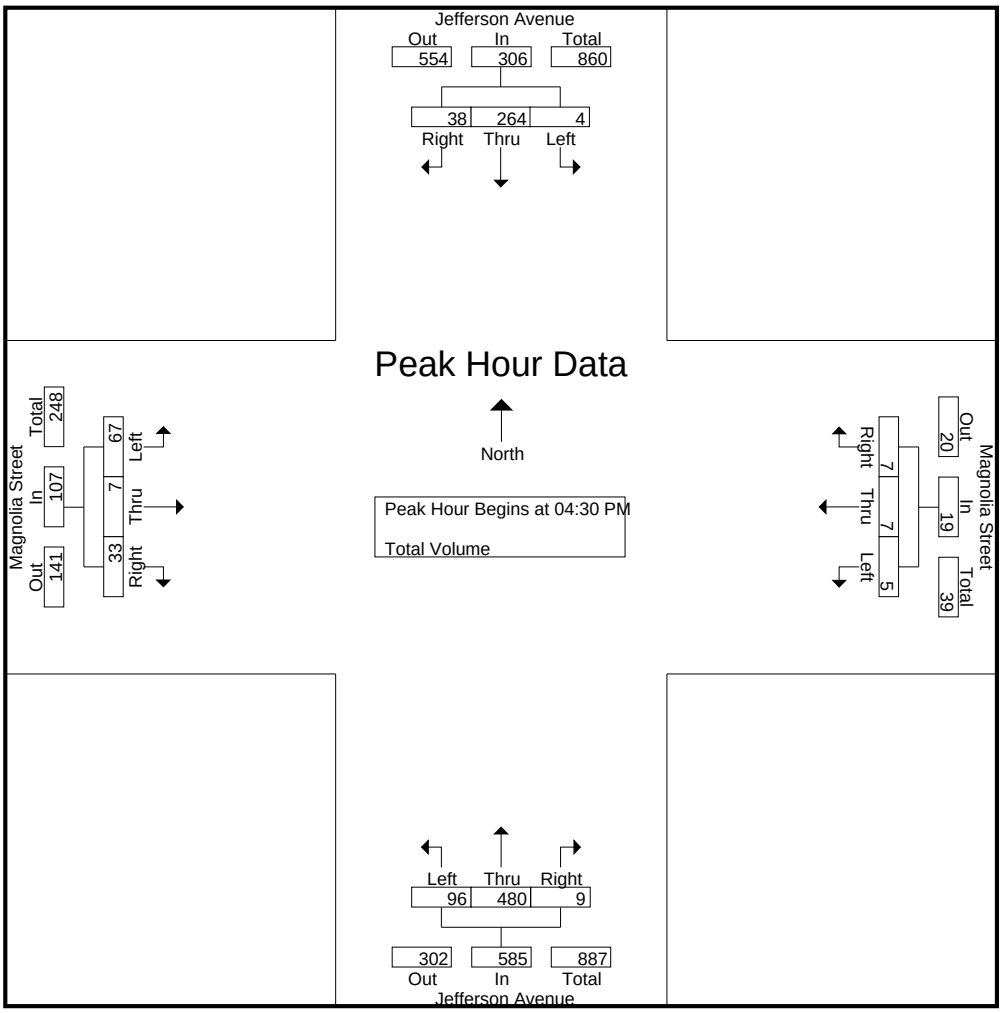

Peak Hour Analysis From 04:00 PM to 05:45 PM - Peak 1 of 1

Peak Hour for Each Approach Begins at:

	04:00 PM				05:00 PM				04:30 PM				04:00 PM			
+0 mins.	1	73	4	78	**3**	**3**	**3**	**9**	22	119	1	142	**21**	1	**16**	**38**
+15 mins.	1	63	**14**	78	0	3	2	5	**28**	**124**	0	**152**	18	**2**	14	34
+30 mins.	0	**78**	13	**91**	1	3	0	4	18	117	**4**	139	17	0	9	26
+45 mins.	**2**	62	9	73	2	1	3	6	28	120	4	152	14	0	7	21
Total Volume	4	276	40	320	6	10	8	24	96	480	9	585	70	3	46	119
% App. Total	1.2	86.2	12.5		25	41.7	33.3		16.4	82.1	1.5		58.8	2.5	38.7	
PHF	.500	.885	.714	.879	.500	.833	.667	.667	.857	.968	.563	.962	.833	.375	.719	.783

Counts Unlimited Inc.
PO Box 1178
Corona, CA 92878
(951) 268-6268

City of Murrieta
N/S: Jefferson Avenue
E/W: Lemon Street
Weather: Sunny

File Name : MURJELEAM
Site Code : 10268661
Start Date : 11/30/2010
Page No : 1

Groups Printed- Total Volume

	Jefferson Avenue Southbound				Lemon Street Westbound				Jefferson Avenue Northbound				Lemon Street Eastbound				
Start Time	Left	Thru	Right	App. Total	Left	Thru	Right	App. Total	Left	Thru	Right	App. Total	Left	Thru	Right	App. Total	Int. Total
07:00 AM	0	80	18	98	0	0	0	0	37	56	0	93	1	0	2	3	194
07:15 AM	0	124	29	153	0	0	0	0	42	36	0	78	24	0	22	46	277
07:30 AM	0	106	6	112	2	0	1	3	15	55	0	70	16	0	31	47	232
07:45 AM	0	124	4	128	0	1	2	3	3	55	0	58	2	0	5	7	196
Total	0	434	57	491	2	1	3	6	97	202	0	299	43	0	60	103	899
08:00 AM	0	121	19	140	0	1	0	1	15	80	0	95	4	0	7	11	247
08:15 AM	0	116	28	144	0	0	1	1	15	62	0	77	5	1	23	29	251
08:30 AM	0	150	6	156	0	1	1	2	25	50	0	75	6	0	32	38	271
08:45 AM	1	114	8	123	1	1	0	2	21	65	0	86	6	0	20	26	237
Total	1	501	61	563	1	3	2	6	76	257	0	333	21	1	82	104	1006
Grand Total	1	935	118	1054	3	4	5	12	173	459	0	632	64	1	142	207	1905
Apprch %	0.1	88.7	11.2		25	33.3	41.7		27.4	72.6	0		30.9	0.5	68.6		
Total %	0.1	49.1	6.2	55.3	0.2	0.2	0.3	0.6	9.1	24.1	0	33.2	3.4	0.1	7.5	10.9	

	Jefferson Avenue Southbound				Lemon Street Westbound				Jefferson Avenue Northbound				Lemon Street Eastbound				
Start Time	Left	Thru	Right	App. Total	Left	Thru	Right	App. Total	Left	Thru	Right	App. Total	Left	Thru	Right	App. Total	Int. Total
Peak Hour Analysis From 07:00 AM to 08:45 AM - Peak 1 of 1																	
Peak Hour for Entire Intersection Begins at 08:00 AM																	
08:00 AM	0	121	19	140	0	**1**	0	1	15	**80**	0	**95**	4	0	7	11	247
08:15 AM	0	116	**28**	144	0	0	**1**	1	15	62	0	77	5	**1**	23	29	251
08:30 AM	0	**150**	6	**156**	0	1	1	**2**	**25**	50	0	75	**6**	0	**32**	**38**	**271**
08:45 AM	**1**	114	8	123	**1**	1	0	2	21	65	0	86	6	0	20	26	237
Total Volume	1	501	61	563	1	3	2	6	76	257	0	333	21	1	82	104	1006
% App. Total	0.2	89	10.8		16.7	50	33.3		22.8	77.2	0		20.2	1	78.8		
PHF	.250	.835	.545	.902	.250	.750	.500	.750	.760	.803	.000	.876	.875	.250	.641	.684	.928

Counts Unlimited Inc.
PO Box 1178
Corona, CA 92878
(951) 268-6268

City of Murrieta
N/S: Jefferson Avenue
E/W: Lemon Street
Weather: Sunny

File Name : MURJELEAM
Site Code : 10268661
Start Date : 11/30/2010
Page No : 2

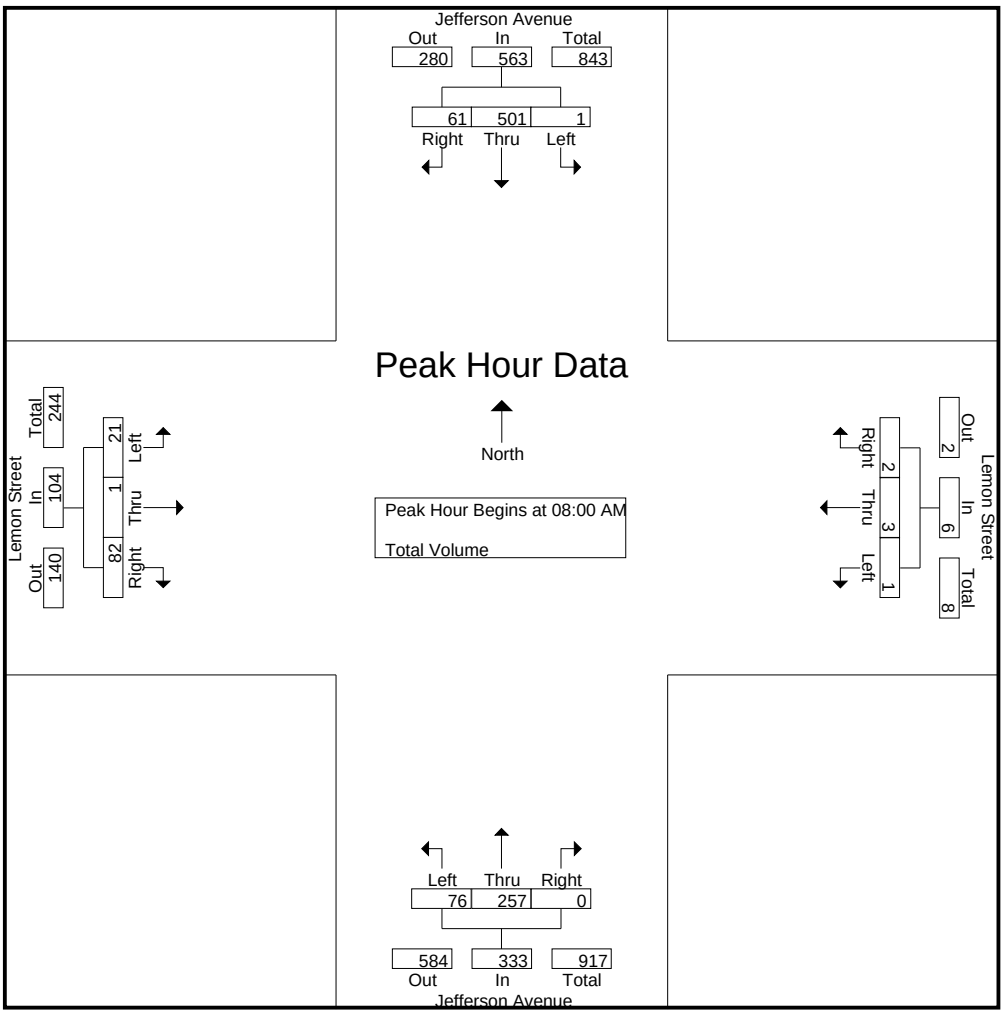

Peak Hour Analysis From 07:00 AM to 08:45 AM - Peak 1 of 1

Peak Hour for Each Approach Begins at:

	07:45 AM				07:30 AM				08:00 AM				07:15 AM			
+0 mins.	0	124	4	128	**2**	0	1	**3**	15	**80**	0	**95**	**24**	0	22	46
+15 mins.	0	121	19	140	0	**1**	**2**	3	15	62	0	77	16	0	**31**	**47**
+30 mins.	0	116	**28**	144	0	1	0	1	**25**	50	0	75	2	0	5	7
+45 mins.	0	**150**	6	**156**	0	0	1	1	21	65	0	86	4	0	7	11
Total Volume	0	511	57	568	2	2	4	8	76	257	0	333	46	0	65	111
% App. Total	0	90	10		25	25	50		22.8	77.2	0		41.4	0	58.6	
PHF	.000	.852	.509	.910	.250	.500	.500	.667	.760	.803	.000	.876	.479	.000	.524	.590

Counts Unlimited Inc.
PO Box 1178
Corona, CA 92878
(951) 268-6268

City of Murrieta
N/S: Jefferson Avenue
E/W: Lemon Street
Weather: Sunny

File Name : MURJELEPM
Site Code : 10268661
Start Date : 11/30/2010
Page No : 1

Groups Printed- Total Volume

	Jefferson Avenue Southbound				Lemon Street Westbound				Jefferson Avenue Northbound				Lemon Street Eastbound				
Start Time	Left	Thru	Right	App. Total	Left	Thru	Right	App. Total	Left	Thru	Right	App. Total	Left	Thru	Right	App. Total	Int. Total
04:00 PM	0	85	8	93	0	0	0	0	16	138	0	154	2	0	10	12	259
04:15 PM	1	85	3	89	1	0	2	3	26	129	0	155	2	0	14	16	263
04:30 PM	1	88	3	92	1	1	3	5	16	146	0	162	1	0	10	11	270
04:45 PM	0	77	1	78	1	2	0	3	24	161	0	185	4	0	9	13	279
Total	2	335	15	352	3	3	5	11	82	574	0	656	9	0	43	52	1071
05:00 PM	0	79	0	79	1	1	1	3	21	151	1	173	1	0	9	10	265
05:15 PM	1	80	2	83	1	0	0	1	17	158	0	175	1	0	9	10	269
05:30 PM	0	72	3	75	0	0	0	0	9	145	0	154	2	0	4	6	235
05:45 PM	0	82	0	82	1	0	0	1	17	155	0	172	0	0	8	8	263
Total	1	313	5	319	3	1	1	5	64	609	1	674	4	0	30	34	1032
Grand Total	3	648	20	671	6	4	6	16	146	1183	1	1330	13	0	73	86	2103
Apprch %	0.4	96.6	3		37.5	25	37.5		11	88.9	0.1		15.1	0	84.9		
Total %	0.1	30.8	1	31.9	0.3	0.2	0.3	0.8	6.9	56.3	0	63.2	0.6	0	3.5	4.1	

	Jefferson Avenue Southbound				Lemon Street Westbound				Jefferson Avenue Northbound				Lemon Street Eastbound				
Start Time	Left	Thru	Right	App. Total	Left	Thru	Right	App. Total	Left	Thru	Right	App. Total	Left	Thru	Right	App. Total	Int. Total
Peak Hour Analysis From 04:00 PM to 05:45 PM - Peak 1 of 1																	
Peak Hour for Entire Intersection Begins at 04:30 PM																	
04:30 PM	**1**	**88**	**3**	**92**	**1**	1	**3**	**5**	16	146	0	162	1	0	**10**	11	270
04:45 PM	0	77	1	78	1	**2**	0	3	**24**	**161**	0	**185**	**4**	0	9	**13**	**279**
05:00 PM	0	79	0	79	1	1	1	3	21	151	**1**	173	1	0	9	10	265
05:15 PM	1	80	2	83	1	0	0	1	17	158	0	175	1	0	9	10	269
Total Volume	2	324	6	332	4	4	4	12	78	616	1	695	7	0	37	44	1083
% App. Total	0.6	97.6	1.8		33.3	33.3	33.3		11.2	88.6	0.1		15.9	0	84.1		
PHF	.500	.920	.500	.902	1.000	.500	.333	.600	.813	.957	.250	.939	.438	.000	.925	.846	.970

Counts Unlimited Inc.
PO Box 1178
Corona, CA 92878
(951) 268-6268

City of Murrieta
N/S: Jefferson Avenue
E/W: Lemon Street
Weather: Sunny

File Name : MURJELEPM
Site Code : 10268661
Start Date : 11/30/2010
Page No : 2

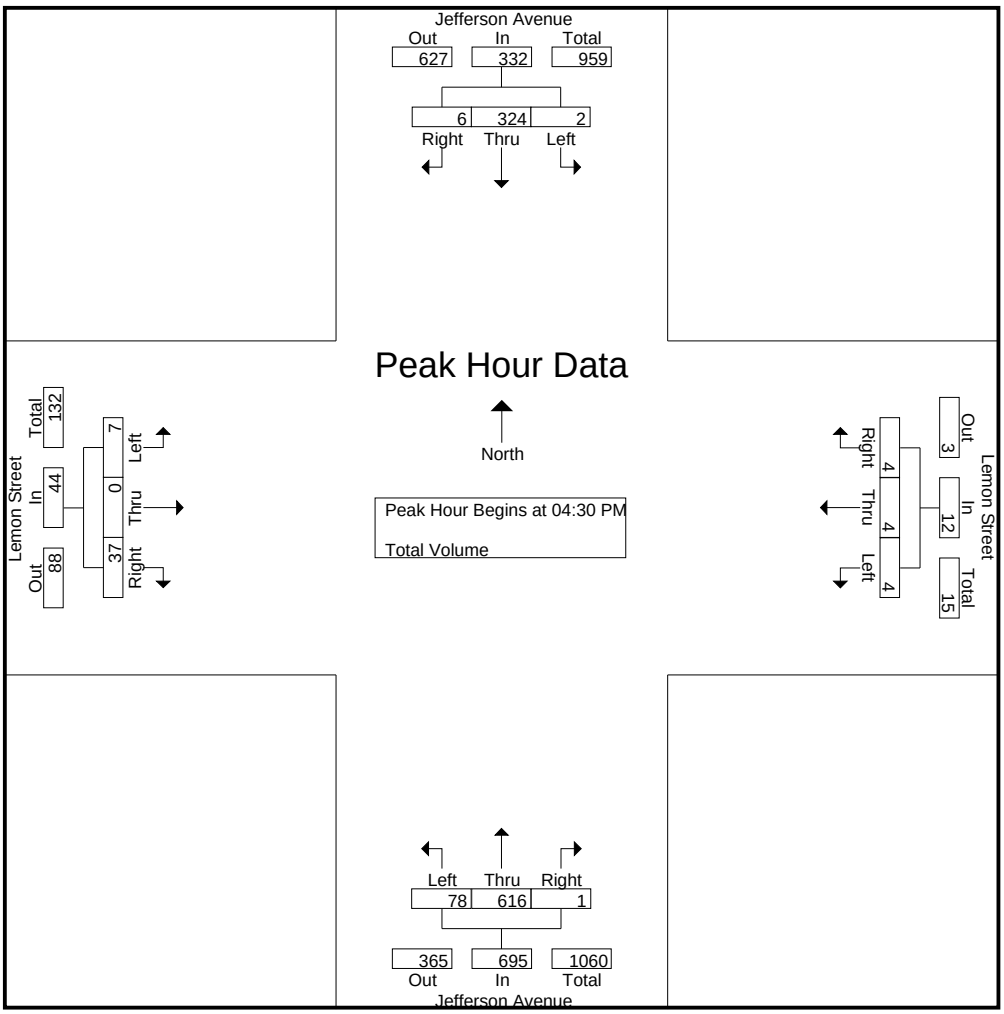

Peak Hour Analysis From 04:00 PM to 05:45 PM - Peak 1 of 1

Peak Hour for Each Approach Begins at:

	04:00 PM				04:15 PM				04:30 PM				04:00 PM			
+0 mins.	0	85	**8**	**93**	**1**	0	2	3	16	146	0	162	2	0	10	12
+15 mins.	**1**	85	3	89	1	1	**3**	**5**	**24**	**161**	0	**185**	2	0	**14**	**16**
+30 mins.	1	**88**	3	92	1	**2**	0	3	21	151	**1**	173	1	0	10	11
+45 mins.	0	77	1	78	1	1	1	3	17	158	0	175	**4**	0	9	13
Total Volume	2	335	15	352	4	4	6	14	78	616	1	695	9	0	43	52
% App. Total	0.6	95.2	4.3		28.6	28.6	42.9		11.2	88.6	0.1		17.3	0	82.7	
PHF	.500	.952	.469	.946	1.000	.500	.500	.700	.813	.957	.250	.939	.563	.000	.768	.813

Counts Unlimited Inc.
PO Box 1178
Corona, CA 92878
(951) 268-6268

City of Murrieta
N/S: Jefferson Avenue
E/W: Kalmia Street
Weather: Sunny

File Name : MURJEKAAM
Site Code : 10266035
Start Date : 11/30/2010
Page No : 1

Groups Printed- Total Volume

	Jefferson Avenue Southbound				Kalmia Street Westbound				Jefferson Avenue Northbound				Kalmia Street Eastbound				
Start Time	Left	Thru	Right	App. Total	Left	Thru	Right	App. Total	Left	Thru	Right	App. Total	Left	Thru	Right	App. Total	Int. Total
07:00 AM	49	29	1	79	15	116	70	201	39	24	16	79	1	83	22	106	465
07:15 AM	78	61	2	141	24	105	45	174	40	28	18	86	0	138	47	185	586
07:30 AM	79	72	1	152	31	60	43	134	14	27	21	62	2	155	40	197	545
07:45 AM	48	71	3	122	52	76	39	167	13	27	5	45	1	94	29	124	458
Total	254	233	7	494	122	357	197	676	106	106	60	272	4	470	138	612	2054
08:00 AM	57	55	17	129	24	73	52	149	12	36	26	74	5	88	36	129	481
08:15 AM	59	58	19	136	34	140	62	236	26	24	30	80	8	135	40	183	635
08:30 AM	77	81	7	165	38	87	42	167	43	27	22	92	4	154	68	226	650
08:45 AM	72	79	9	160	42	128	44	214	34	39	19	92	2	141	63	206	672
Total	265	273	52	590	138	428	200	766	115	126	97	338	19	518	207	744	2438
Grand Total	519	506	59	1084	260	785	397	1442	221	232	157	610	23	988	345	1356	4492
Apprch %	47.9	46.7	5.4		18	54.4	27.5		36.2	38	25.7		1.7	72.9	25.4		
Total %	11.6	11.3	1.3	24.1	5.8	17.5	8.8	32.1	4.9	5.2	3.5	13.6	0.5	22	7.7	30.2	

	Jefferson Avenue Southbound				Kalmia Street Westbound				Jefferson Avenue Northbound				Kalmia Street Eastbound				
Start Time	Left	Thru	Right	App. Total	Left	Thru	Right	App. Total	Left	Thru	Right	App. Total	Left	Thru	Right	App. Total	Int. Total
Peak Hour Analysis From 07:00 AM to 08:45 AM - Peak 1 of 1																	
Peak Hour for Entire Intersection Begins at 08:00 AM																	
08:00 AM	57	55	17	129	24	73	52	149	12	36	26	74	5	88	36	129	481
08:15 AM	59	58	**19**	136	34	**140**	**62**	**236**	26	24	**30**	80	**8**	135	40	183	635
08:30 AM	**77**	**81**	7	**165**	38	87	42	167	**43**	27	22	**92**	4	**154**	**68**	**226**	650
08:45 AM	72	79	9	160	**42**	128	44	214	34	**39**	19	92	2	141	63	206	**672**
Total Volume	265	273	52	590	138	428	200	766	115	126	97	338	19	518	207	744	2438
% App. Total	44.9	46.3	8.8		18	55.9	26.1		34	37.3	28.7		2.6	69.6	27.8		
PHF	.860	.843	.684	.894	.821	.764	.806	.811	.669	.808	.808	.918	.594	.841	.761	.823	.907

Counts Unlimited Inc.
PO Box 1178
Corona, CA 92878
(951) 268-6268

City of Murrieta
N/S: Jefferson Avenue
E/W: Kalmia Street
Weather: Sunny

File Name : MURJEKAAM
Site Code : 10266035
Start Date : 11/30/2010
Page No : 2

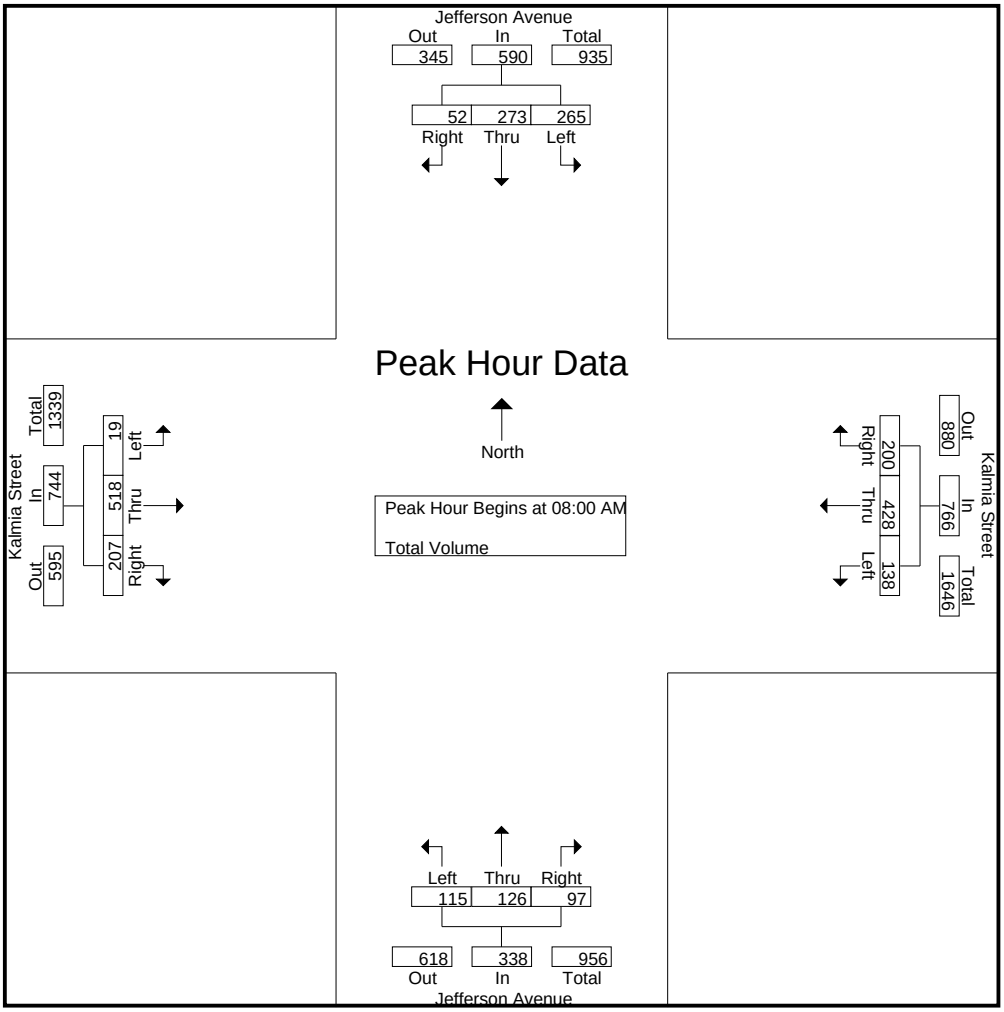

Peak Hour Analysis From 07:00 AM to 08:45 AM - Peak 1 of 1

Peak Hour for Each Approach Begins at:

	08:00 AM				08:00 AM				08:00 AM				08:00 AM			
+0 mins.	57	55	17	129	24	73	52	149	12	36	26	74	5	88	36	129
+15 mins.	59	58	**19**	136	34	**140**	**62**	**236**	26	24	**30**	80	**8**	135	40	183
+30 mins.	**77**	**81**	7	**165**	38	87	42	167	**43**	27	22	**92**	4	**154**	**68**	**226**
+45 mins.	72	79	9	160	**42**	128	44	214	34	**39**	19	92	2	141	63	206
Total Volume	265	273	52	590	138	428	200	766	115	126	97	338	19	518	207	744
% App. Total	44.9	46.3	8.8		18	55.9	26.1		34	37.3	28.7		2.6	69.6	27.8	
PHF	.860	.843	.684	.894	.821	.764	.806	.811	.669	.808	.808	.918	.594	.841	.761	.823

Counts Unlimited Inc.
PO Box 1178
Corona, CA 92878
(951) 268-6268

City of Murrieta
N/S: Jefferson Avenue
E/W: Kalmia Street
Weather: Sunny

File Name : MURJEKAPM
Site Code : 10266035
Start Date : 11/30/2010
Page No : 1

Groups Printed- Total Volume

	Jefferson Avenue Southbound				Kalmia Street Westbound				Jefferson Avenue Northbound				Kalmia Street Eastbound				
Start Time	Left	Thru	Right	App. Total	Left	Thru	Right	App. Total	Left	Thru	Right	App. Total	Left	Thru	Right	App. Total	Int. Total
04:00 PM	43	44	5	92	34	130	86	250	37	73	41	151	0	135	42	177	670
04:15 PM	45	56	3	104	32	95	54	181	49	82	54	185	6	128	53	187	657
04:30 PM	46	37	2	85	28	101	74	203	38	74	65	177	2	123	46	171	636
04:45 PM	43	51	4	98	35	133	92	260	56	78	49	183	9	109	50	168	709
Total	177	188	14	379	129	459	306	894	180	307	209	696	17	495	191	703	2672
05:00 PM	34	42	2	78	33	129	78	240	48	92	65	205	3	155	49	207	730
05:15 PM	35	41	2	78	28	113	91	232	48	77	55	180	4	122	38	164	654
05:30 PM	39	43	3	85	23	110	71	204	62	75	59	196	3	100	47	150	635
05:45 PM	36	46	4	86	30	131	72	233	65	106	38	209	3	111	34	148	676
Total	144	172	11	327	114	483	312	909	223	350	217	790	13	488	168	669	2695
Grand Total	321	360	25	706	243	942	618	1803	403	657	426	1486	30	983	359	1372	5367
Apprch %	45.5	51	3.5		13.5	52.2	34.3		27.1	44.2	28.7		2.2	71.6	26.2		
Total %	6	6.7	0.5	13.2	4.5	17.6	11.5	33.6	7.5	12.2	7.9	27.7	0.6	18.3	6.7	25.6	

	Jefferson Avenue Southbound				Kalmia Street Westbound				Jefferson Avenue Northbound				Kalmia Street Eastbound				
Start Time	Left	Thru	Right	App. Total	Left	Thru	Right	App. Total	Left	Thru	Right	App. Total	Left	Thru	Right	App. Total	Int. Total
Peak Hour Analysis From 04:00 PM to 05:45 PM - Peak 1 of 1																	
Peak Hour for Entire Intersection Begins at 04:15 PM																	
04:15 PM	45	**56**	3	**104**	32	95	54	181	49	82	54	185	6	128	**53**	187	657
04:30 PM	**46**	37	2	85	28	101	74	203	38	74	**65**	177	2	123	46	171	636
04:45 PM	43	51	**4**	98	**35**	**133**	**92**	**260**	**56**	78	49	183	**9**	109	50	168	709
05:00 PM	34	42	2	78	33	129	78	240	48	**92**	65	**205**	3	**155**	49	**207**	**730**
Total Volume	168	186	11	365	128	458	298	884	191	326	233	750	20	515	198	733	2732
% App. Total	46	51	3		14.5	51.8	33.7		25.5	43.5	31.1		2.7	70.3	27		
PHF	.913	.830	.688	.877	.914	.861	.810	.850	.853	.886	.896	.915	.556	.831	.934	.885	.936

Counts Unlimited Inc.
PO Box 1178
Corona, CA 92878
(951) 268-6268

City of Murrieta
N/S: Jefferson Avenue
E/W: Kalmia Street
Weather: Sunny

File Name : MURJEKAPM
Site Code : 10266035
Start Date : 11/30/2010
Page No : 2

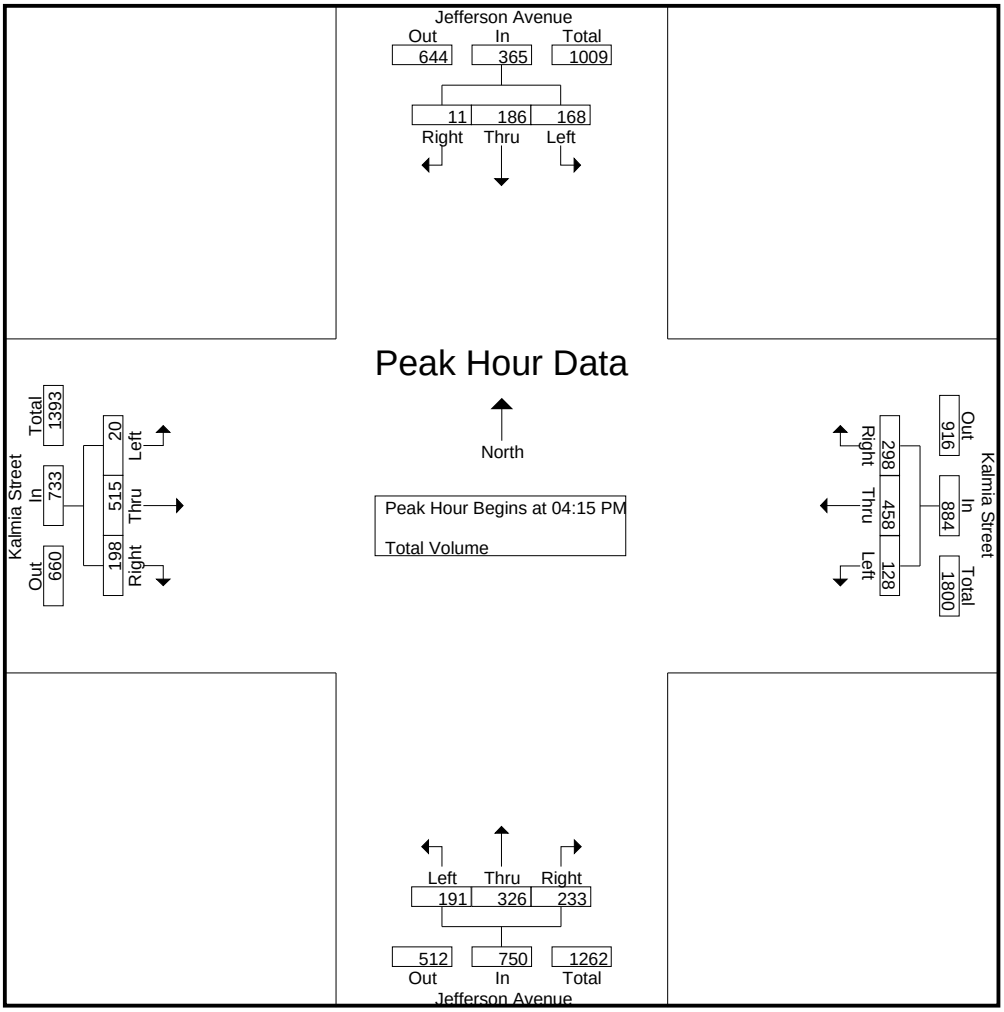

Peak Hour Analysis From 04:00 PM to 05:45 PM - Peak 1 of 1

Peak Hour for Each Approach Begins at:

	04:00 PM				04:45 PM				05:00 PM				04:15 PM			
+0 mins.	43	44	**5**	92	**35**	**133**	**92**	**260**	48	92	**65**	205	6	128	**53**	187
+15 mins.	45	**56**	3	**104**	33	129	78	240	48	77	55	180	2	123	46	171
+30 mins.	**46**	37	2	85	28	113	91	232	62	75	59	196	**9**	109	50	168
+45 mins.	43	51	4	98	23	110	71	204	**65**	**106**	38	**209**	3	**155**	49	**207**
Total Volume	177	188	14	379	119	485	332	936	223	350	217	790	20	515	198	733
% App. Total	46.7	49.6	3.7		12.7	51.8	35.5		28.2	44.3	27.5		2.7	70.3	27	
PHF	.962	.839	.700	.911	.850	.912	.902	.900	.858	.825	.835	.945	.556	.831	.934	.885

Counts Unlimited Inc.
PO Box 1178
Corona, CA 92878
(951) 268-6268

City of Murrieta
N/S: Jefferson Avenue
E/W: Juniper Street
Weather: Sunny

File Name : MURJEJUAM
Site Code : 10266155
Start Date : 11/30/2010
Page No : 1

Groups Printed- Total Volume

	Jefferson Avenue Southbound				Juniper Street Westbound				Jefferson Avenue Northbound				Juniper Street Eastbound				
Start Time	Left	Thru	Right	App. Total	Left	Thru	Right	App. Total	Left	Thru	Right	App. Total	Left	Thru	Right	App. Total	Int. Total
07:00 AM	5	59	3	67	3	5	11	19	5	71	1	77	12	8	9	29	192
07:15 AM	10	111	4	125	6	7	9	22	9	60	2	71	6	11	9	26	244
07:30 AM	9	138	7	154	4	12	4	20	13	46	1	60	8	7	9	24	258
07:45 AM	2	146	13	161	7	11	3	21	11	52	4	67	6	8	11	25	274
Total	26	454	27	507	20	35	27	82	38	229	8	275	32	34	38	104	968
08:00 AM	8	102	8	118	1	17	3	21	23	59	0	82	10	12	15	37	258
08:15 AM	4	124	9	137	1	35	9	45	26	59	6	91	16	26	41	83	356
08:30 AM	15	142	3	160	0	15	7	22	10	68	3	81	17	31	14	62	325
08:45 AM	10	158	11	179	6	11	4	21	10	72	6	88	11	15	9	35	323
Total	37	526	31	594	8	78	23	109	69	258	15	342	54	84	79	217	1262
Grand Total	63	980	58	1101	28	113	50	191	107	487	23	617	86	118	117	321	2230
Apprch %	5.7	89	5.3		14.7	59.2	26.2		17.3	78.9	3.7		26.8	36.8	36.4		
Total %	2.8	43.9	2.6	49.4	1.3	5.1	2.2	8.6	4.8	21.8	1	27.7	3.9	5.3	5.2	14.4	

	Jefferson Avenue Southbound				Juniper Street Westbound				Jefferson Avenue Northbound				Juniper Street Eastbound				
Start Time	Left	Thru	Right	App. Total	Left	Thru	Right	App. Total	Left	Thru	Right	App. Total	Left	Thru	Right	App. Total	Int. Total
Peak Hour Analysis From 07:00 AM to 08:45 AM - Peak 1 of 1																	
Peak Hour for Entire Intersection Begins at 08:00 AM																	
08:00 AM	8	102	8	118	1	17	3	21	23	59	0	82	10	12	15	37	258
08:15 AM	4	124	9	137	1	**35**	**9**	**45**	**26**	59	**6**	**91**	16	26	**41**	**83**	**356**
08:30 AM	**15**	142	3	160	0	15	7	22	10	68	3	81	**17**	**31**	14	62	325
08:45 AM	10	**158**	**11**	**179**	**6**	11	4	21	10	**72**	6	88	11	15	9	35	323
Total Volume	37	526	31	594	8	78	23	109	69	258	15	342	54	84	79	217	1262
% App. Total	6.2	88.6	5.2		7.3	71.6	21.1		20.2	75.4	4.4		24.9	38.7	36.4		
PHF	.617	.832	.705	.830	.333	.557	.639	.606	.663	.896	.625	.940	.794	.677	.482	.654	.886

Counts Unlimited Inc.
PO Box 1178
Corona, CA 92878
(951) 268-6268

City of Murrieta
N/S: Jefferson Avenue
E/W: Juniper Street
Weather: Sunny

File Name : MURJEJUAM
Site Code : 10266155
Start Date : 11/30/2010
Page No : 2

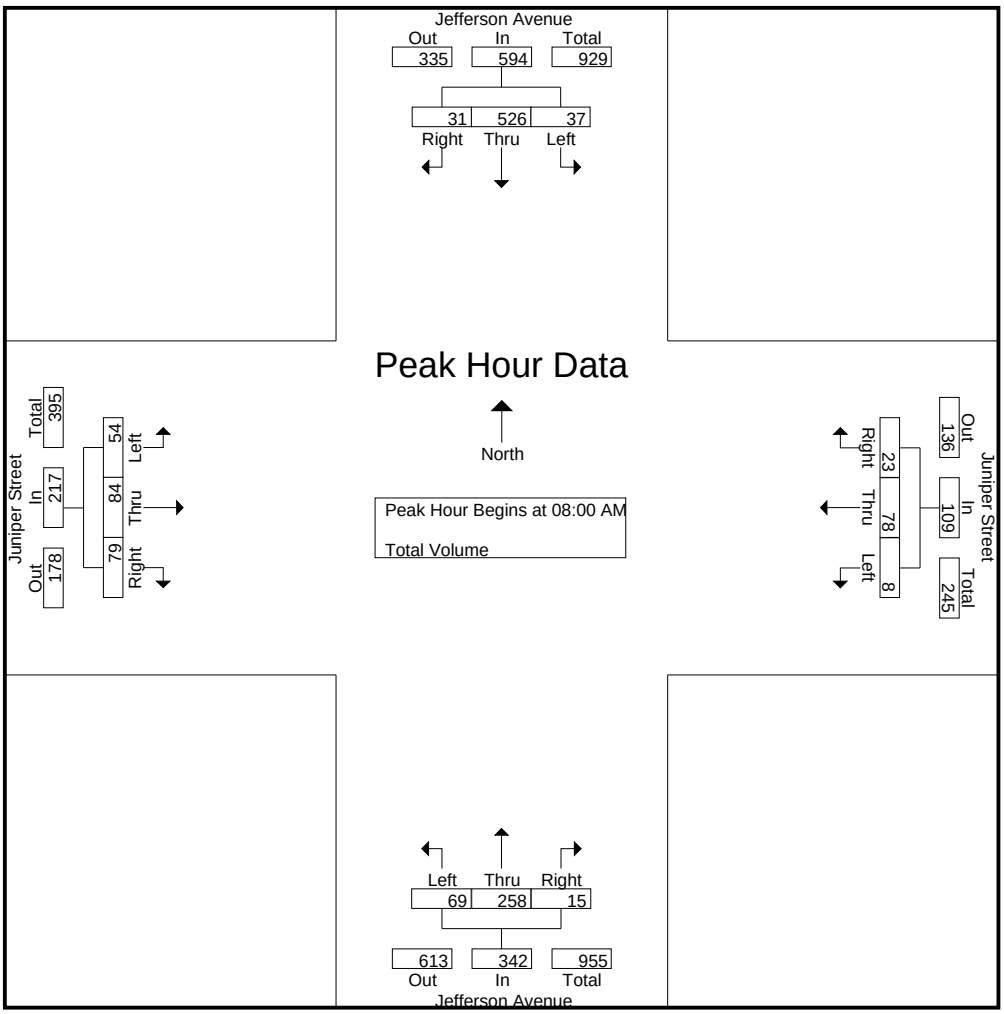

Peak Hour Analysis From 07:00 AM to 08:45 AM - Peak 1 of 1

Peak Hour for Each Approach Begins at:

	08:00 AM				07:45 AM				08:00 AM				08:00 AM			
+0 mins.	8	102	8	118	**7**	11	3	21	23	59	0	82	10	12	15	37
+15 mins.	4	124	9	137	1	17	3	21	**26**	59	**6**	**91**	16	26	**41**	**83**
+30 mins.	**15**	142	3	160	1	**35**	**9**	**45**	10	68	3	81	**17**	**31**	14	62
+45 mins.	10	**158**	**11**	**179**	0	15	7	22	10	**72**	6	88	11	15	9	35
Total Volume	37	526	31	594	9	78	22	109	69	258	15	342	54	84	79	217
% App. Total	6.2	88.6	5.2		8.3	71.6	20.2		20.2	75.4	4.4		24.9	38.7	36.4	
PHF	.617	.832	.705	.830	.321	.557	.611	.606	.663	.896	.625	.940	.794	.677	.482	.654

Counts Unlimited Inc.
PO Box 1178
Corona, CA 92878
(951) 268-6268

City of Murrieta
N/S: Jefferson Avenue
E/W: Juniper Street
Weather: Sunny

File Name : MURJEJUPM
Site Code : 10266155
Start Date : 11/30/2010
Page No : 1

Groups Printed- Total Volume

	Jefferson Avenue Southbound				Juniper Street Westbound				Jefferson Avenue Northbound				Juniper Street Eastbound				
Start Time	Left	Thru	Right	App. Total	Left	Thru	Right	App. Total	Left	Thru	Right	App. Total	Left	Thru	Right	App. Total	Int. Total
04:00 PM	7	84	10	101	6	11	16	33	11	137	7	155	7	7	21	35	324
04:15 PM	16	111	4	131	3	11	9	23	13	159	7	179	8	11	6	25	358
04:30 PM	10	88	5	103	4	14	10	28	15	156	14	185	15	14	12	41	357
04:45 PM	5	109	9	123	4	10	19	33	12	189	20	221	12	11	13	36	413
Total	38	392	28	458	17	46	54	117	51	641	48	740	42	43	52	137	1452
05:00 PM	21	105	7	133	3	16	6	25	21	185	24	230	13	18	16	47	435
05:15 PM	8	84	6	98	3	11	7	21	16	169	18	203	11	14	9	34	356
05:30 PM	13	94	6	113	0	10	13	23	12	195	12	219	12	10	17	39	394
05:45 PM	2	62	5	69	2	6	14	22	11	175	5	191	10	3	10	23	305
Total	44	345	24	413	8	43	40	91	60	724	59	843	46	45	52	143	1490
Grand Total	82	737	52	871	25	89	94	208	111	1365	107	1583	88	88	104	280	2942
Apprch %	9.4	84.6	6		12	42.8	45.2		7	86.2	6.8		31.4	31.4	37.1		
Total %	2.8	25.1	1.8	29.6	0.8	3	3.2	7.1	3.8	46.4	3.6	53.8	3	3	3.5	9.5	

	Jefferson Avenue Southbound				Juniper Street Westbound				Jefferson Avenue Northbound				Juniper Street Eastbound				
Start Time	Left	Thru	Right	App. Total	Left	Thru	Right	App. Total	Left	Thru	Right	App. Total	Left	Thru	Right	App. Total	Int. Total
Peak Hour Analysis From 04:00 PM to 05:45 PM - Peak 1 of 1																	
Peak Hour for Entire Intersection Begins at 04:45 PM																	
04:45 PM	5	**109**	**9**	123	**4**	10	**19**	**33**	12	189	20	221	12	11	13	36	413
05:00 PM	**21**	105	7	**133**	3	**16**	6	25	**21**	185	**24**	**230**	**13**	**18**	16	**47**	**435**
05:15 PM	8	84	6	98	3	11	7	21	16	169	18	203	11	14	9	34	356
05:30 PM	13	94	6	113	0	10	13	23	12	**195**	12	219	12	10	**17**	39	394
Total Volume	47	392	28	467	10	47	45	102	61	738	74	873	48	53	55	156	1598
% App. Total	10.1	83.9	6		9.8	46.1	44.1		7	84.5	8.5		30.8	34	35.3		
PHF	.560	.899	.778	.878	.625	.734	.592	.773	.726	.946	.771	.949	.923	.736	.809	.830	.918

Counts Unlimited Inc.
PO Box 1178
Corona, CA 92878
(951) 268-6268

City of Murrieta
N/S: Jefferson Avenue
E/W: Juniper Street
Weather: Sunny

File Name : MURJEJUPM
Site Code : 10266155
Start Date : 11/30/2010
Page No : 2

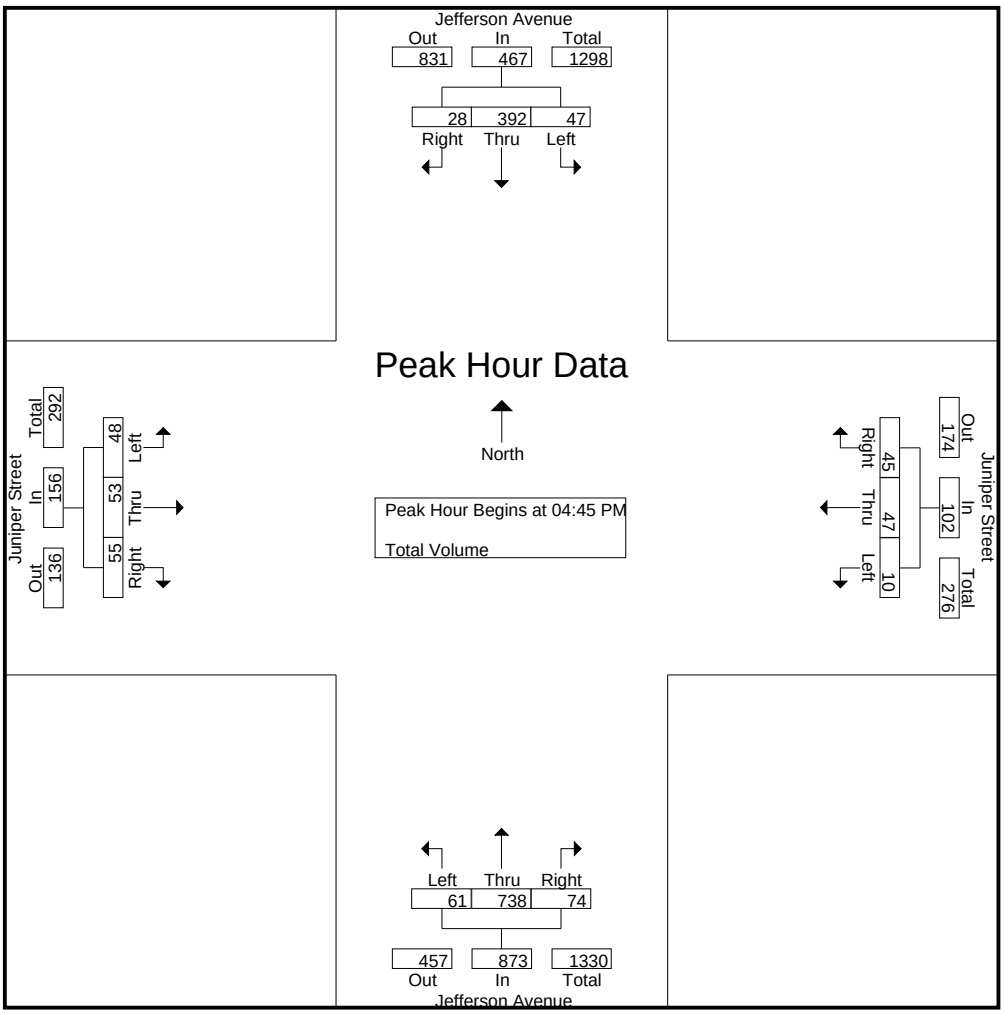

Peak Hour Analysis From 04:00 PM to 05:45 PM - Peak 1 of 1

Peak Hour for Each Approach Begins at:

	04:15 PM				04:00 PM				04:45 PM				04:30 PM			
+0 mins.	16	**111**	4	131	**6**	11	16	**33**	12	189	20	221	**15**	14	12	41
+15 mins.	10	88	5	103	3	11	9	23	**21**	185	**24**	**230**	12	11	13	36
+30 mins.	5	109	**9**	123	4	**14**	10	28	16	169	18	203	13	**18**	**16**	**47**
+45 mins.	**21**	105	7	**133**	4	10	**19**	33	12	**195**	12	219	11	14	9	34
Total Volume	52	413	25	490	17	46	54	117	61	738	74	873	51	57	50	158
% App. Total	10.6	84.3	5.1		14.5	39.3	46.2		7	84.5	8.5		32.3	36.1	31.6	
PHF	.619	.930	.694	.921	.708	.821	.711	.886	.726	.946	.771	.949	.850	.792	.781	.840

Counts Unlimited Inc.
PO Box 1178
Corona, CA 92878
(951) 268-6268

City of Murrieta
N/S: Jefferson Street
E/W: Ivy Street-Los Alamos Road
Weather: Sunny

File Name : MURJELAAM
Site Code : 10266156
Start Date : 11/30/2010
Page No : 1

Groups Printed- Total Volume

	Jefferson Avenue Southbound				Los Alamos Road Westbound				Jefferson Avenue Northbound				Ivy Street Eastbound				
Start Time	Left	Thru	Right	App. Total	Left	Thru	Right	App. Total	Left	Thru	Right	App. Total	Left	Thru	Right	App. Total	Int. Total
07:00 AM	30	40	1	71	26	25	47	98	7	25	4	36	5	39	20	64	269
07:15 AM	41	66	6	113	32	25	39	96	5	22	3	30	9	38	14	61	300
07:30 AM	49	106	9	164	47	40	30	117	7	24	2	33	2	34	23	59	373
07:45 AM	22	118	10	150	64	49	31	144	13	26	9	48	2	33	28	63	405
Total	142	330	26	498	169	139	147	455	32	97	18	147	18	144	85	247	1347
08:00 AM	24	85	4	113	42	27	32	101	22	46	9	77	7	35	23	65	356
08:15 AM	38	113	5	156	43	28	34	105	24	38	11	73	10	33	29	72	406
08:30 AM	54	118	9	181	39	20	27	86	23	47	13	83	6	43	30	79	429
08:45 AM	36	125	19	180	47	45	39	131	31	40	6	77	4	34	20	58	446
Total	152	441	37	630	171	120	132	423	100	171	39	310	27	145	102	274	1637
Grand Total	294	771	63	1128	340	259	279	878	132	268	57	457	45	289	187	521	2984
Apprch %	26.1	68.4	5.6		38.7	29.5	31.8		28.9	58.6	12.5		8.6	55.5	35.9		
Total %	9.9	25.8	2.1	37.8	11.4	8.7	9.3	29.4	4.4	9	1.9	15.3	1.5	9.7	6.3	17.5	

	Jefferson Avenue Southbound				Los Alamos Road Westbound				Jefferson Avenue Northbound				Ivy Street Eastbound				
Start Time	Left	Thru	Right	App. Total	Left	Thru	Right	App. Total	Left	Thru	Right	App. Total	Left	Thru	Right	App. Total	Int. Total
Peak Hour Analysis From 07:00 AM to 08:45 AM - Peak 1 of 1																	
Peak Hour for Entire Intersection Begins at 08:00 AM																	
08:00 AM	24	85	4	113	42	27	32	101	22	46	9	77	7	35	23	65	356
08:15 AM	38	113	5	156	43	28	34	105	24	38	11	73	**10**	33	29	72	406
08:30 AM	**54**	118	9	**181**	39	20	27	86	23	**47**	**13**	**83**	6	**43**	**30**	**79**	429
08:45 AM	36	**125**	**19**	180	**47**	**45**	**39**	**131**	**31**	40	6	77	4	34	20	58	**446**
Total Volume	152	441	37	630	171	120	132	423	100	171	39	310	27	145	102	274	1637
% App. Total	24.1	70	5.9		40.4	28.4	31.2		32.3	55.2	12.6		9.9	52.9	37.2		
PHF	.704	.882	.487	.870	.910	.667	.846	.807	.806	.910	.750	.934	.675	.843	.850	.867	.918

Counts Unlimited Inc.
PO Box 1178
Corona, CA 92878
(951) 268-6268

City of Murrieta
N/S: Jefferson Street
E/W: Ivy Street-Los Alamos Road
Weather: Sunny

File Name : MURJELAAM
Site Code : 10266156
Start Date : 11/30/2010
Page No : 2

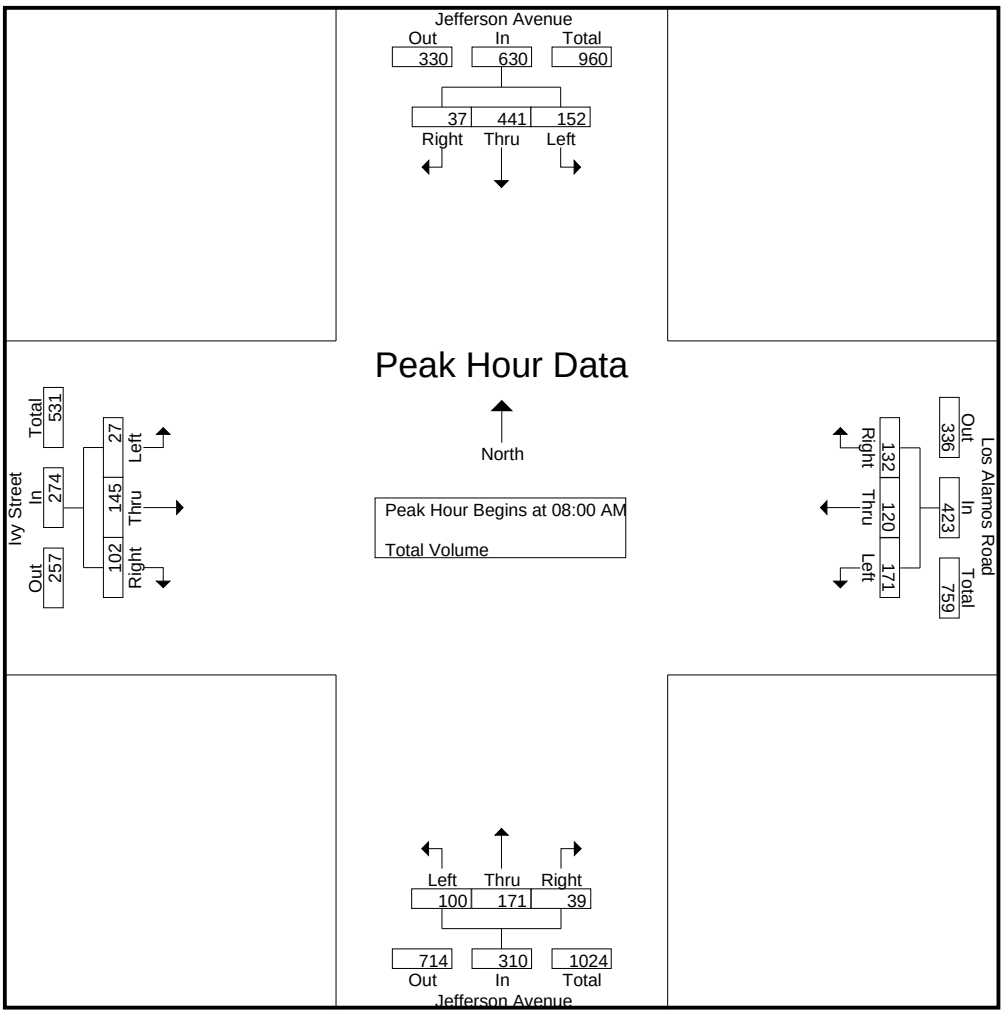

Peak Hour Analysis From 07:00 AM to 08:45 AM - Peak 1 of 1

Peak Hour for Each Approach Begins at:

	08:00 AM				07:30 AM				08:00 AM				07:45 AM			
+0 mins.	24	85	4	113	47	40	30	117	22	46	9	77	2	33	28	63
+15 mins.	38	113	5	156	**64**	**49**	31	**144**	24	38	11	73	7	35	23	65
+30 mins.	**54**	118	9	**181**	42	27	32	101	23	**47**	**13**	**83**	**10**	33	29	72
+45 mins.	36	**125**	**19**	180	43	28	**34**	105	**31**	40	6	77	6	**43**	**30**	**79**
Total Volume	152	441	37	630	196	144	127	467	100	171	39	310	25	144	110	279
% App. Total	24.1	70	5.9		42	30.8	27.2		32.3	55.2	12.6		9	51.6	39.4	
PHF	.704	.882	.487	.870	.766	.735	.934	.811	.806	.910	.750	.934	.625	.837	.917	.883

Counts Unlimited Inc.
PO Box 1178
Corona, CA 92878
(951) 268-6268

City of Murrieta
N/S: Jefferson Street
E/W: Ivy Street-Los Alamos Road
Weather: Sunny

File Name : MURJELAPM
Site Code : 10266156
Start Date : 11/30/2010
Page No : 1

Groups Printed- Total Volume

	Jefferson Avenue Southbound				Los Alamos Road Westbound				Jefferson Avenue Northbound				Ivy Street Eastbound				
Start Time	Left	Thru	Right	App. Total	Left	Thru	Right	App. Total	Left	Thru	Right	App. Total	Left	Thru	Right	App. Total	Int. Total
04:00 PM	39	83	12	134	27	41	35	103	28	118	77	223	12	51	32	95	555
04:15 PM	33	81	9	123	31	48	26	105	37	135	60	232	13	49	31	93	553
04:30 PM	35	77	6	118	33	40	30	103	46	145	87	278	10	78	39	127	626
04:45 PM	43	78	12	133	27	52	34	113	46	158	86	290	10	54	31	95	631
Total	150	319	39	508	118	181	125	424	157	556	310	1023	45	232	133	410	2365
05:00 PM	35	76	9	120	24	39	48	111	44	155	126	325	16	57	38	111	667
05:15 PM	35	66	9	110	14	30	20	64	44	169	103	316	8	56	21	85	575
05:30 PM	30	77	6	113	17	27	37	81	29	155	95	279	7	39	17	63	536
05:45 PM	25	63	7	95	26	49	46	121	38	129	62	229	9	40	21	70	515
Total	125	282	31	438	81	145	151	377	155	608	386	1149	40	192	97	329	2293
Grand Total	275	601	70	946	199	326	276	801	312	1164	696	2172	85	424	230	739	4658
Apprch %	29.1	63.5	7.4		24.8	40.7	34.5		14.4	53.6	32		11.5	57.4	31.1		
Total %	5.9	12.9	1.5	20.3	4.3	7	5.9	17.2	6.7	25	14.9	46.6	1.8	9.1	4.9	15.9	

	Jefferson Avenue Southbound				Los Alamos Road Westbound				Jefferson Avenue Northbound				Ivy Street Eastbound				
Start Time	Left	Thru	Right	App. Total	Left	Thru	Right	App. Total	Left	Thru	Right	App. Total	Left	Thru	Right	App. Total	Int. Total
Peak Hour Analysis From 04:00 PM to 05:45 PM - Peak 1 of 1																	
Peak Hour for Entire Intersection Begins at 04:30 PM																	
04:30 PM	35	77	6	118	**33**	40	30	103	**46**	145	87	278	10	**78**	**39**	**127**	626
04:45 PM	**43**	**78**	**12**	**133**	27	**52**	34	**113**	46	158	86	290	10	54	31	95	631
05:00 PM	35	76	9	120	24	39	**48**	111	44	155	**126**	**325**	**16**	57	38	111	**667**
05:15 PM	35	66	9	110	14	30	20	64	44	**169**	103	316	8	56	21	85	575
Total Volume	148	297	36	481	98	161	132	391	180	627	402	1209	44	245	129	418	2499
% App. Total	30.8	61.7	7.5		25.1	41.2	33.8		14.9	51.9	33.3		10.5	58.6	30.9		
PHF	.860	.952	.750	.904	.742	.774	.688	.865	.978	.928	.798	.930	.688	.785	.827	.823	.937

Counts Unlimited Inc.
PO Box 1178
Corona, CA 92878
(951) 268-6268

City of Murrieta
N/S: Jefferson Street
E/W: Ivy Street-Los Alamos Road
Weather: Sunny

File Name : MURJELAPM
Site Code : 10266156
Start Date : 11/30/2010
Page No : 2

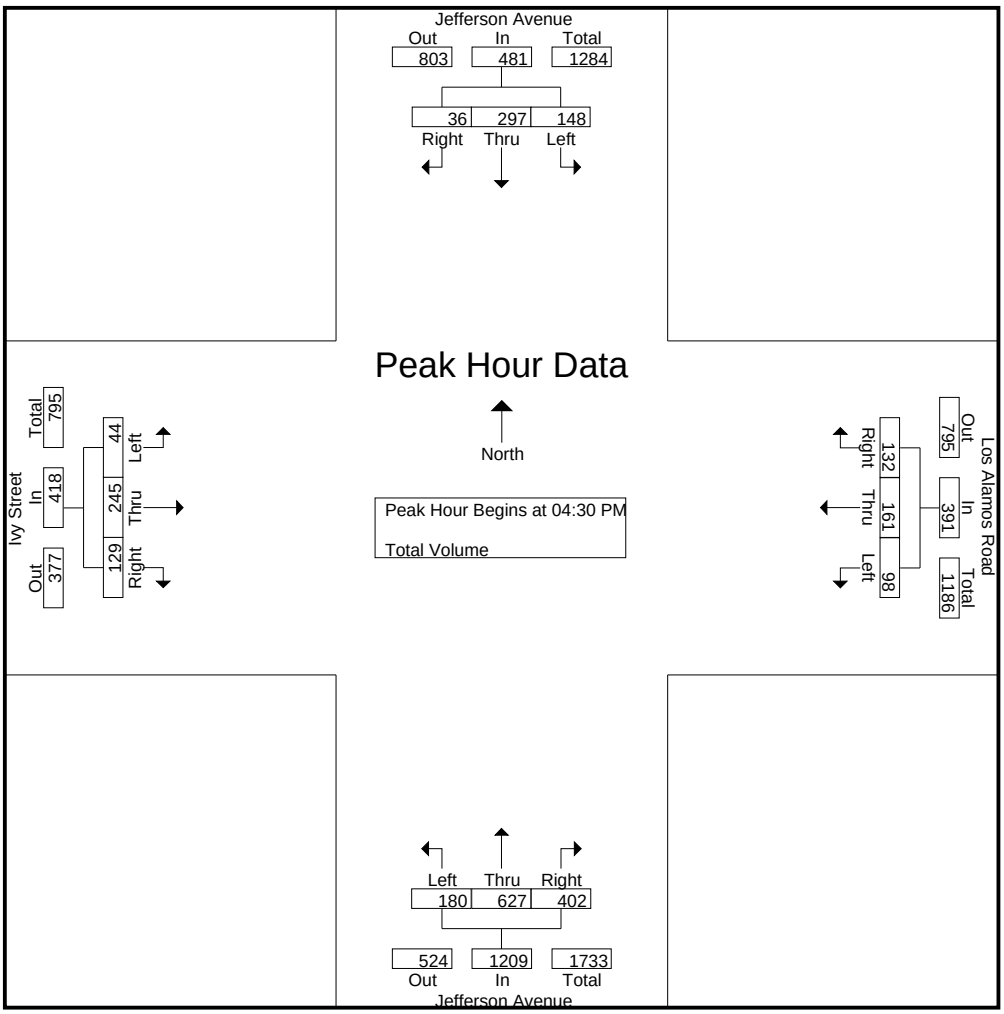

Peak Hour Analysis From 04:00 PM to 05:45 PM - Peak 1 of 1

Peak Hour for Each Approach Begins at:

	04:00 PM				04:15 PM				04:45 PM				04:15 PM			
+0 mins.	39	**83**	**12**	**134**	31	48	26	105	**46**	158	86	290	13	49	31	93
+15 mins.	33	81	9	123	**33**	40	30	103	44	155	**126**	**325**	10	**78**	**39**	**127**
+30 mins.	35	77	6	118	27	**52**	34	**113**	44	**169**	103	316	10	54	31	95
+45 mins.	**43**	78	12	133	24	39	**48**	111	29	155	95	279	**16**	57	38	111
Total Volume	150	319	39	508	115	179	138	432	163	637	410	1210	49	238	139	426
% App. Total	29.5	62.8	7.7		26.6	41.4	31.9		13.5	52.6	33.9		11.5	55.9	32.6	
PHF	.872	.961	.813	.948	.871	.861	.719	.956	.886	.942	.813	.931	.766	.763	.891	.839

Counts Unlimited Inc.
PO Box 1178
Corona, CA 92878
(951) 268-6268

City of Murrieta
N/S: Madison Avenue
E/W: Kalmia Street
Weather: Sunny

File Name : MURMAKAAM
Site Code : 10266051
Start Date : 11/30/2010
Page No : 1

Groups Printed- Total Volume

	Kalmia Street Westbound			Madison Avenue Northbound			Kalmia Street Eastbound			
Start Time	Left	Thru	App. Total	Left	Right	App. Total	Thru	Right	App. Total	Int. Total
07:00 AM	36	189	225	16	40	56	131	15	146	427
07:15 AM	50	165	215	9	41	50	183	27	210	475
07:30 AM	74	148	222	13	41	54	225	32	257	533
07:45 AM	79	166	245	14	47	61	172	13	185	491
Total	239	668	907	52	169	221	711	87	798	1926
08:00 AM	67	166	233	18	47	65	149	18	167	465
08:15 AM	61	217	278	27	47	74	207	19	226	578
08:30 AM	82	175	257	32	63	95	210	30	240	592
08:45 AM	100	214	314	31	80	111	199	40	239	664
Total	310	772	1082	108	237	345	765	107	872	2299
Grand Total	549	1440	1989	160	406	566	1476	194	1670	4225
Apprch %	27.6	72.4		28.3	71.7		88.4	11.6		
Total %	13	34.1	47.1	3.8	9.6	13.4	34.9	4.6	39.5	

	Kalmia Street Westbound			Madison Avenue Northbound			Kalmia Street Eastbound			
Start Time	Left	Thru	App. Total	Left	Right	App. Total	Thru	Right	App. Total	Int. Total
Peak Hour Analysis From 07:00 AM to 08:45 AM - Peak 1 of 1										
Peak Hour for Entire Intersection Begins at 08:00 AM										
08:00 AM	67	166	233	18	47	65	149	18	167	465
08:15 AM	61	**217**	278	27	47	74	207	19	226	578
08:30 AM	82	175	257	**32**	63	95	**210**	30	**240**	592
08:45 AM	**100**	214	**314**	31	**80**	**111**	199	**40**	239	**664**
Total Volume	310	772	1082	108	237	345	765	107	872	2299
% App. Total	28.7	71.3		31.3	68.7		87.7	12.3		
PHF	.775	.889	.861	.844	.741	.777	.911	.669	.908	.866

Counts Unlimited Inc.
PO Box 1178
Corona, CA 92878
(951) 268-6268

City of Murrieta
N/S: Madison Avenue
E/W: Kalmia Street
Weather: Sunny

File Name : MURMAKAAM
Site Code : 10266051
Start Date : 11/30/2010
Page No : 2

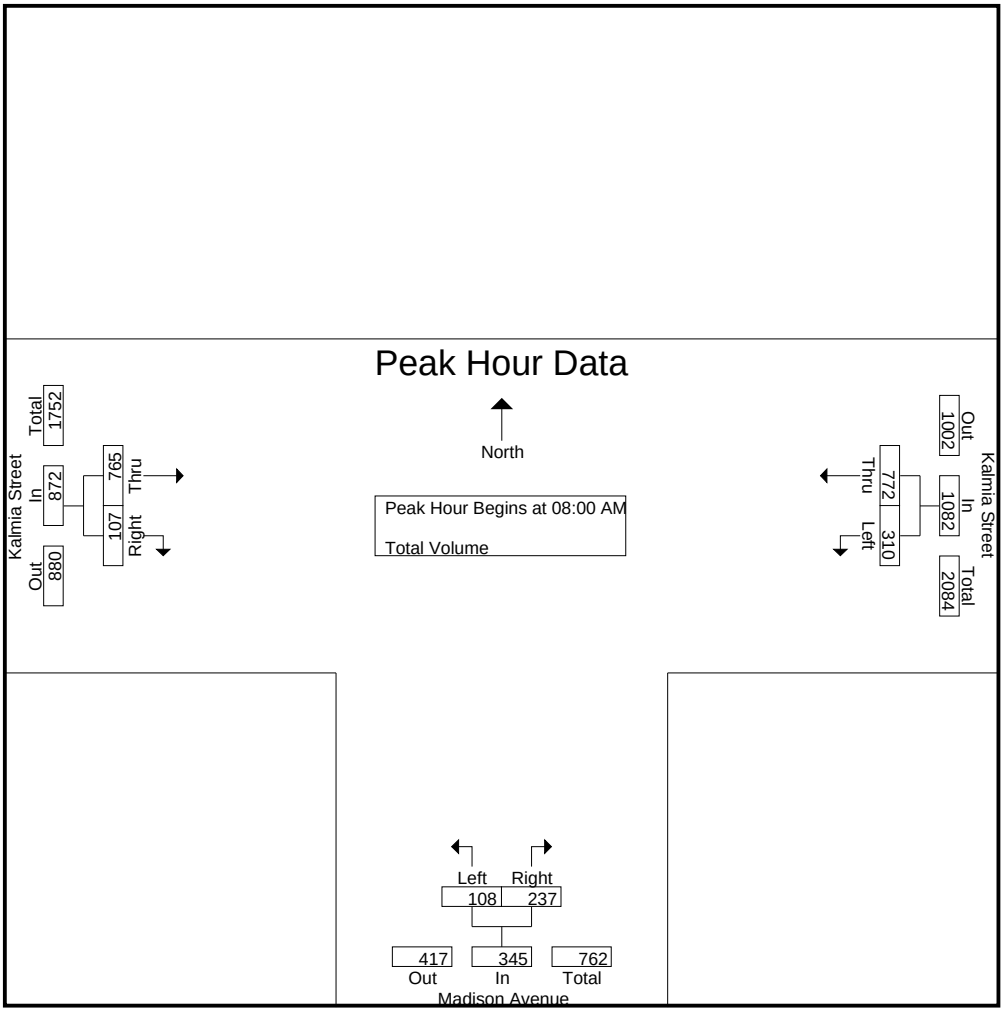

Peak Hour Analysis From 07:00 AM to 08:45 AM - Peak 1 of 1

Peak Hour for Each Approach Begins at:

	08:00 AM			08:00 AM			08:00 AM		
+0 mins.	67	166	233	18	47	65	149	18	167
+15 mins.	61	**217**	278	27	47	74	207	19	226
+30 mins.	82	175	257	**32**	63	95	**210**	30	**240**
+45 mins.	**100**	214	**314**	31	**80**	**111**	199	**40**	239
Total Volume	310	772	1082	108	237	345	765	107	872
% App. Total	28.7	71.3		31.3	68.7		87.7	12.3	
PHF	.775	.889	.861	.844	.741	.777	.911	.669	.908

Counts Unlimited Inc.
PO Box 1178
Corona, CA 92878
(951) 268-6268

City of Murrieta
N/S: Madison Avenue
E/W: Kalmia Street
Weather: Sunny

File Name : MURMAKAPM
Site Code : 10266051
Start Date : 11/30/2010
Page No : 1

Groups Printed- Total Volume

	Kalmia Street Westbound			Madison Avenue Northbound			Kalmia Street Eastbound			
Start Time	Left	Thru	App. Total	Left	Right	App. Total	Thru	Right	App. Total	Int. Total
04:00 PM	114	256	370	45	129	174	241	44	285	829
04:15 PM	111	205	316	54	111	165	259	48	307	788
04:30 PM	92	225	317	44	145	189	259	51	310	816
04:45 PM	89	228	317	62	148	210	244	36	280	807
Total	406	914	1320	205	533	738	1003	179	1182	3240
05:00 PM	96	232	328	41	126	167	265	50	315	810
05:15 PM	106	267	373	43	118	161	252	35	287	821
05:30 PM	109	231	340	42	109	151	242	37	279	770
05:45 PM	86	224	310	56	125	181	230	41	271	762
Total	397	954	1351	182	478	660	989	163	1152	3163
Grand Total	803	1868	2671	387	1011	1398	1992	342	2334	6403
Apprch %	30.1	69.9		27.7	72.3		85.3	14.7		
Total %	12.5	29.2	41.7	6	15.8	21.8	31.1	5.3	36.5	

	Kalmia Street Westbound			Madison Avenue Northbound			Kalmia Street Eastbound			
Start Time	Left	Thru	App. Total	Left	Right	App. Total	Thru	Right	App. Total	Int. Total
Peak Hour Analysis From 04:00 PM to 05:45 PM - Peak 1 of 1										
Peak Hour for Entire Intersection Begins at 04:30 PM										
04:30 PM	92	225	317	44	145	189	259	**51**	310	816
04:45 PM	89	228	317	**62**	**148**	**210**	244	36	280	807
05:00 PM	96	232	328	41	126	167	**265**	50	**315**	810
05:15 PM	**106**	**267**	**373**	43	118	161	252	35	287	**821**
Total Volume	383	952	1335	190	537	727	1020	172	1192	3254
% App. Total	28.7	71.3		26.1	73.9		85.6	14.4		
PHF	.903	.891	.895	.766	.907	.865	.962	.843	.946	.991

Counts Unlimited Inc.
PO Box 1178
Corona, CA 92878
(951) 268-6268

City of Murrieta
N/S: Madison Avenue
E/W: Kalmia Street
Weather: Sunny

File Name : MURMAKAPM
Site Code : 10266051
Start Date : 11/30/2010
Page No : 2

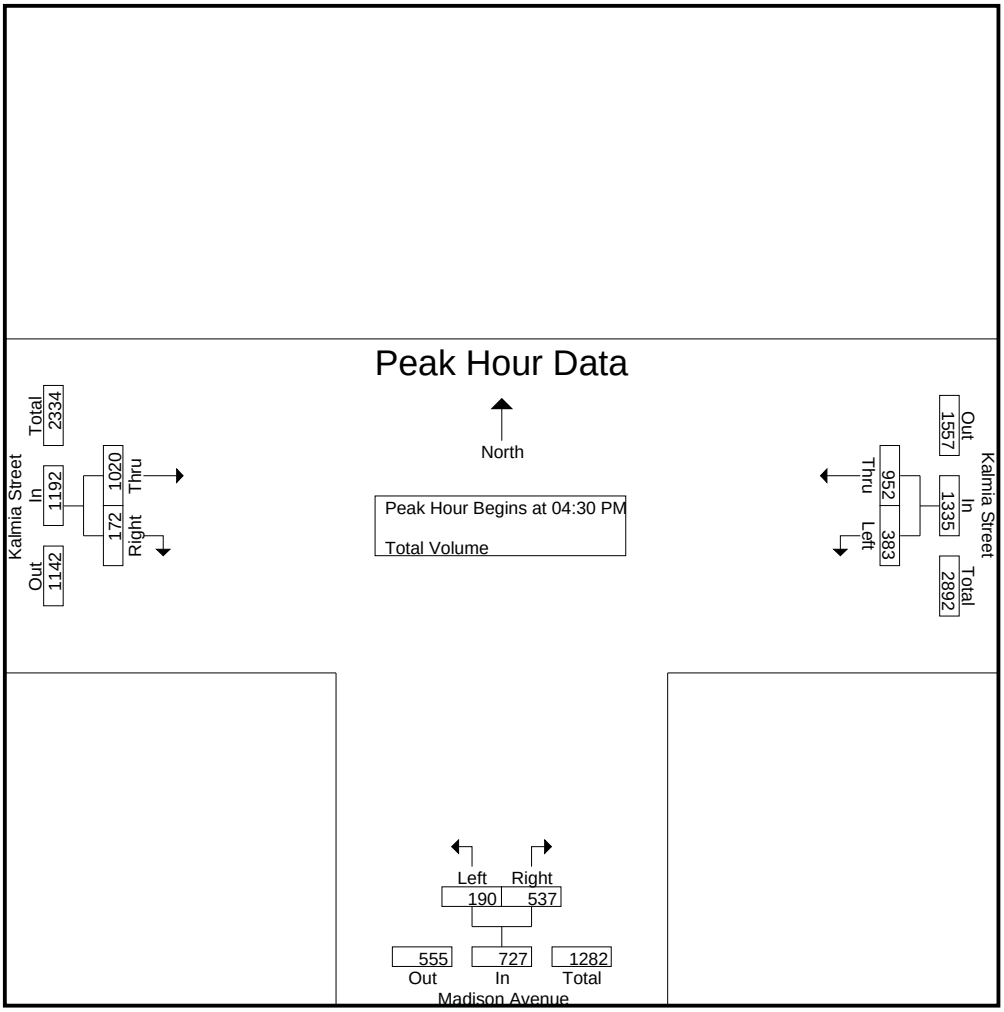

Peak Hour Analysis From 04:00 PM to 05:45 PM - Peak 1 of 1

Peak Hour for Each Approach Begins at:

	04:45 PM			04:00 PM			04:15 PM		
+0 mins.	89	228	317	45	129	174	259	48	307
+15 mins.	96	232	328	54	111	165	259	**51**	310
+30 mins.	106	**267**	**373**	44	145	189	244	36	280
+45 mins.	**109**	231	340	**62**	**148**	**210**	**265**	50	**315**
Total Volume	400	958	1358	205	533	738	1027	185	1212
% App. Total	29.5	70.5		27.8	72.2		84.7	15.3	
PHF	.917	.897	.910	.827	.900	.879	.969	.907	.962

Counts Unlimited Inc.
PO Box 1178
Corona, CA 92878
(951) 268-6268

City of Murrieta
N/S: I-15 Southbound Ramps
E/W: Kalmia Street
Weather: Sunny

File Name : MUR15SKAAM
Site Code : 10266063
Start Date : 11/30/2010
Page No : 1

Groups Printed- Total Volume

	I-15 Southbound Off Ramp Southbound				Kalmia Street Westbound				I-15 Southbound On Ramp Northbound				Kalmia Street Eastbound				
Start Time	Left	Thru	Right	App. Total	Left	Thru	Right	App. Total	Left	Thru	Right	App. Total	Left	Thru	Right	App. Total	Int. Total
07:00 AM	47	0	51	98	81	183	0	264	0	0	0	0	0	51	88	139	501
07:15 AM	84	0	54	138	104	143	0	247	0	0	0	0	0	120	80	200	585
07:30 AM	81	0	54	135	149	150	0	299	0	0	0	0	0	130	82	212	646
07:45 AM	68	0	82	150	119	160	0	279	0	0	0	0	0	93	80	173	602
Total	280	0	241	521	453	636	0	1089	0	0	0	0	0	394	330	724	2334
08:00 AM	57	0	62	119	108	168	0	276	0	0	0	0	0	88	61	149	544
08:15 AM	76	0	70	146	95	209	0	304	0	0	0	0	0	117	83	200	650
08:30 AM	84	2	71	157	96	183	0	279	0	0	0	0	0	126	109	235	671
08:45 AM	88	0	75	163	113	213	0	326	0	0	0	0	0	152	120	272	761
Total	305	2	278	585	412	773	0	1185	0	0	0	0	0	483	373	856	2626
Grand Total	585	2	519	1106	865	1409	0	2274	0	0	0	0	0	877	703	1580	4960
Apprch %	52.9	0.2	46.9		38	62	0		0	0	0		0	55.5	44.5		
Total %	11.8	0	10.5	22.3	17.4	28.4	0	45.8	0	0	0	0	0	17.7	14.2	31.9	

	I-15 Southbound Off Ramp Southbound				Kalmia Street Westbound				I-15 Southbound On Ramp Northbound				Kalmia Street Eastbound				
Start Time	Left	Thru	Right	App. Total	Left	Thru	Right	App. Total	Left	Thru	Right	App. Total	Left	Thru	Right	App. Total	Int. Total
Peak Hour Analysis From 07:00 AM to 08:45 AM - Peak 1 of 1																	
Peak Hour for Entire Intersection Begins at 08:00 AM																	
08:00 AM	57	0	62	119	108	168	0	276	0	0	0	0	0	88	61	149	544
08:15 AM	76	0	70	146	95	209	0	304	0	0	0	0	0	117	83	200	650
08:30 AM	84	**2**	71	157	96	183	0	279	0	0	0	0	0	126	109	235	671
08:45 AM	**88**	0	**75**	**163**	**113**	**213**	0	**326**	0	0	0	0	0	**152**	**120**	**272**	**761**
Total Volume	305	2	278	585	412	773	0	1185	0	0	0	0	0	483	373	856	2626
% App. Total	52.1	0.3	47.5		34.8	65.2	0		0	0	0		0	56.4	43.6		
PHF	.866	.250	.927	.897	.912	.907	.000	.909	.000	.000	.000	.000	.000	.794	.777	.787	.863

Counts Unlimited Inc.
PO Box 1178
Corona, CA 92878
(951) 268-6268

City of Murrieta
N/S: I-15 Southbound Ramps
E/W: Kalmia Street
Weather: Sunny

File Name : MUR15SKAAM
Site Code : 10266063
Start Date : 11/30/2010
Page No : 2

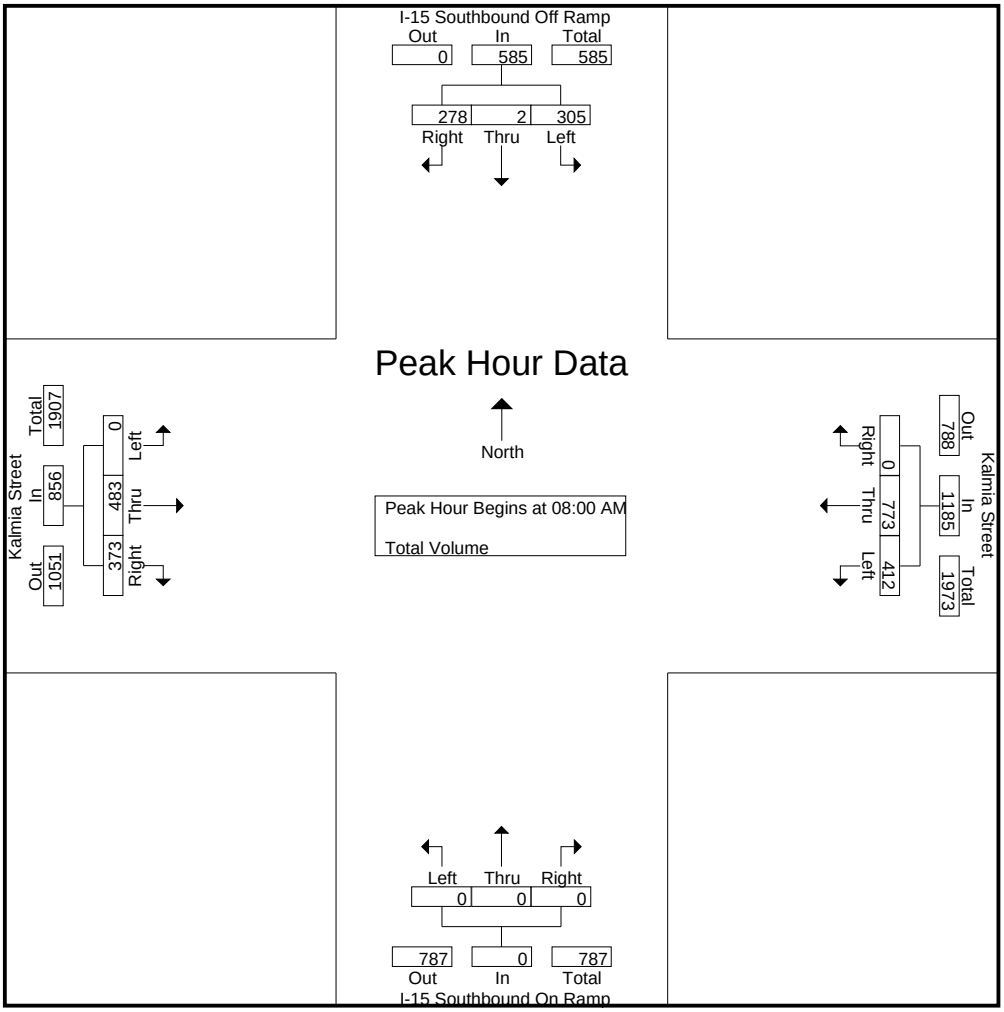

Peak Hour Analysis From 07:00 AM to 08:45 AM - Peak 1 of 1

Peak Hour for Each Approach Begins at:

	08:00 AM				08:00 AM				07:00 AM				08:00 AM			
+0 mins.	57	0	62	119	108	168	0	276	0	0	0	0	0	88	61	149
+15 mins.	76	0	70	146	95	209	0	304	0	0	0	0	0	117	83	200
+30 mins.	84	**2**	71	157	96	183	0	279	0	0	0	0	0	126	109	235
+45 mins.	**88**	0	**75**	**163**	**113**	**213**	0	**326**	0	0	0	0	0	**152**	**120**	**272**
Total Volume	305	2	278	585	412	773	0	1185	0	0	0	0	0	483	373	856
% App. Total	52.1	0.3	47.5		34.8	65.2	0		0	0	0		0	56.4	43.6	
PHF	.866	.250	.927	.897	.912	.907	.000	.909	.000	.000	.000	.000	.000	.794	.777	.787

Counts Unlimited Inc.
PO Box 1178
Corona, CA 92878
(951) 268-6268

City of Murrieta
N/S: I-15 Southbound Ramps
E/W: Kalmia Street
Weather: Sunny

File Name : MUR15SKAPM
Site Code : 10266063
Start Date : 11/30/2010
Page No : 1

Groups Printed- Total Volume

	I-15 Southbound Off Ramp Southbound				Kalmia Street Westbound				I-15 Southbound On Ramp Northbound				Kalmia Street Eastbound				
Start Time	Left	Thru	Right	App. Total	Left	Thru	Right	App. Total	Left	Thru	Right	App. Total	Left	Thru	Right	App. Total	Int. Total
04:00 PM	85	1	95	181	87	250	0	337	0	0	0	0	0	256	101	357	875
04:15 PM	93	1	89	183	85	228	0	313	0	0	0	0	0	259	103	362	858
04:30 PM	105	0	77	182	85	243	0	328	0	0	0	0	0	283	104	387	897
04:45 PM	96	1	110	207	94	247	0	341	0	0	0	0	0	291	90	381	929
Total	379	3	371	753	351	968	0	1319	0	0	0	0	0	1089	398	1487	3559
05:00 PM	73	1	86	160	104	238	0	342	0	0	0	0	0	289	106	395	897
05:15 PM	85	0	88	173	102	259	0	361	0	0	0	0	0	246	108	354	888
05:30 PM	96	0	91	187	80	227	0	307	0	0	0	0	0	256	84	340	834
05:45 PM	98	0	86	184	67	231	0	298	0	0	0	0	0	262	94	356	838
Total	352	1	351	704	353	955	0	1308	0	0	0	0	0	1053	392	1445	3457
Grand Total	731	4	722	1457	704	1923	0	2627	0	0	0	0	0	2142	790	2932	7016
Apprch %	50.2	0.3	49.6		26.8	73.2	0		0	0	0		0	73.1	26.9		
Total %	10.4	0.1	10.3	20.8	10	27.4	0	37.4	0	0	0	0	0	30.5	11.3	41.8	

	I-15 Southbound Off Ramp Southbound				Kalmia Street Westbound				I-15 Southbound On Ramp Northbound				Kalmia Street Eastbound				
Start Time	Left	Thru	Right	App. Total	Left	Thru	Right	App. Total	Left	Thru	Right	App. Total	Left	Thru	Right	App. Total	Int. Total
Peak Hour Analysis From 04:00 PM to 05:45 PM - Peak 1 of 1																	
Peak Hour for Entire Intersection Begins at 04:30 PM																	
04:30 PM	**105**	0	77	182	85	243	0	328	0	0	0	0	0	283	104	387	897
04:45 PM	96	**1**	**110**	**207**	94	247	0	341	0	0	0	0	0	**291**	90	381	**929**
05:00 PM	73	1	86	160	**104**	238	0	342	0	0	0	0	0	289	106	**395**	897
05:15 PM	85	0	88	173	102	**259**	0	**361**	0	0	0	0	0	246	**108**	354	888
Total Volume	359	2	361	722	385	987	0	1372	0	0	0	0	0	1109	408	1517	3611
% App. Total	49.7	0.3	50		28.1	71.9	0		0	0	0		0	73.1	26.9		
PHF	.855	.500	.820	.872	.925	.953	.000	.950	.000	.000	.000	.000	.000	.953	.944	.960	.972

Counts Unlimited Inc.
PO Box 1178
Corona, CA 92878
(951) 268-6268

City of Murrieta
N/S: I-15 Southbound Ramps
E/W: Kalmia Street
Weather: Sunny

File Name : MUR15SKAPM
Site Code : 10266063
Start Date : 11/30/2010
Page No : 2

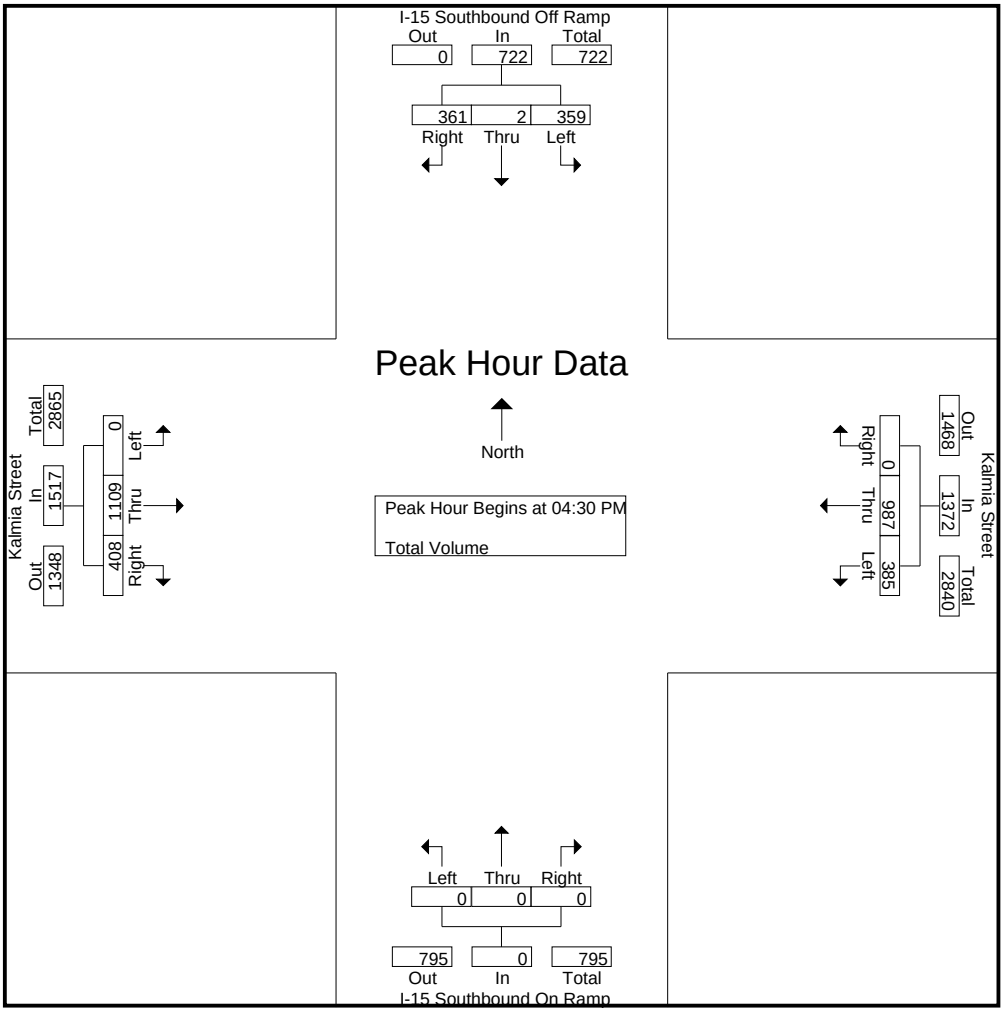

Peak Hour Analysis From 04:00 PM to 05:45 PM - Peak 1 of 1

Peak Hour for Each Approach Begins at:

	04:00 PM				04:30 PM				04:00 PM				04:15 PM			
+0 mins.	85	**1**	95	181	85	243	0	328	0	0	0	0	0	259	103	362
+15 mins.	93	1	89	183	94	247	0	341	0	0	0	0	0	283	104	387
+30 mins.	**105**	0	77	182	**104**	238	0	342	0	0	0	0	0	**291**	90	381
+45 mins.	96	1	**110**	**207**	102	**259**	0	**361**	0	0	0	0	0	289	**106**	**395**
Total Volume	379	3	371	753	385	987	0	1372	0	0	0	0	0	1122	403	1525
% App. Total	50.3	0.4	49.3		28.1	71.9	0		0	0	0		0	73.6	26.4	
PHF	.902	.750	.843	.909	.925	.953	.000	.950	.000	.000	.000	.000	.000	.964	.950	.965

Counts Unlimited Inc.
PO Box 1178
Corona, CA 92878
(951) 268-6268

City of Murrieta
N/S: Monroe Avenue
E/W: Murrieta Hot Springs Road
Weather: Sunny

File Name : MURMOMHSAM
Site Code : 10266066
Start Date : 11/30/2010
Page No : 1

Groups Printed- Total Volume

	Monroe Avenue Southbound			Murrieta Hot Springs Road Westbound			Murrieta Hot Springs Road Eastbound			
Start Time	Left	Right	App. Total	Thru	Right	App. Total	Left	Thru	App. Total	Int. Total
07:00 AM	0	12	12	283	1	284	14	141	155	451
07:15 AM	0	9	9	349	1	350	22	195	217	576
07:30 AM	0	16	16	366	2	368	33	259	292	676
07:45 AM	0	22	22	398	2	400	37	273	310	732
Total	0	59	59	1396	6	1402	106	868	974	2435
08:00 AM	0	15	15	326	5	331	26	252	278	624
08:15 AM	0	12	12	347	8	355	42	275	317	684
08:30 AM	0	24	24	385	3	388	27	271	298	710
08:45 AM	0	20	20	405	9	414	30	299	329	763
Total	0	71	71	1463	25	1488	125	1097	1222	2781
Grand Total	0	130	130	2859	31	2890	231	1965	2196	5216
Apprch %	0	100		98.9	1.1		10.5	89.5		
Total %	0	2.5	2.5	54.8	0.6	55.4	4.4	37.7	42.1	

	Monroe Avenue Southbound			Murrieta Hot Springs Road Westbound			Murrieta Hot Springs Road Eastbound			
Start Time	Left	Right	App. Total	Thru	Right	App. Total	Left	Thru	App. Total	Int. Total
Peak Hour Analysis From 07:00 AM to 08:45 AM - Peak 1 of 1										
Peak Hour for Entire Intersection Begins at 08:00 AM										
08:00 AM	0	15	15	326	5	331	26	252	278	624
08:15 AM	0	12	12	347	8	355	**42**	275	317	684
08:30 AM	0	**24**	**24**	385	3	388	27	271	298	710
08:45 AM	0	20	20	**405**	**9**	**414**	30	**299**	**329**	**763**
Total Volume	0	71	71	1463	25	1488	125	1097	1222	2781
% App. Total	0	100		98.3	1.7		10.2	89.8		
PHF	.000	.740	.740	.903	.694	.899	.744	.917	.929	.911

Counts Unlimited Inc.
PO Box 1178
Corona, CA 92878
(951) 268-6268

City of Murrieta
N/S: Monroe Avenue
E/W: Murrieta Hot Springs Road
Weather: Sunny

File Name : MURMOMHSAM
Site Code : 10266066
Start Date : 11/30/2010
Page No : 2

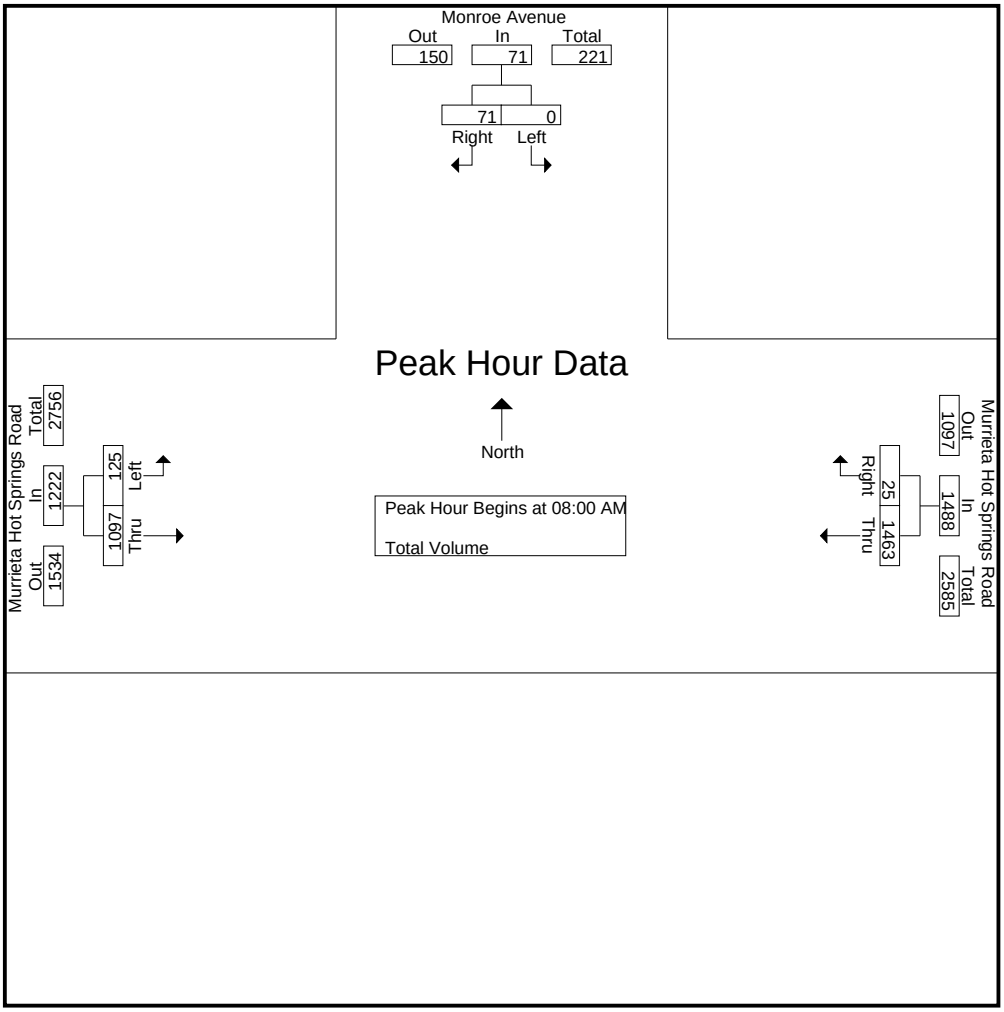

Peak Hour Analysis From 07:00 AM to 08:45 AM - Peak 1 of 1

Peak Hour for Each Approach Begins at:

	07:45 AM			08:00 AM			08:00 AM		
+0 mins.	0	22	22	326	5	331	26	252	278
+15 mins.	0	15	15	347	8	355	**42**	275	317
+30 mins.	0	12	12	385	3	388	27	271	298
+45 mins.	0	**24**	**24**	**405**	**9**	**414**	30	**299**	**329**
Total Volume	0	73	73	1463	25	1488	125	1097	1222
% App. Total	0	100		98.3	1.7		10.2	89.8	
PHF	.000	.760	.760	.903	.694	.899	.744	.917	.929

Counts Unlimited Inc.
PO Box 1178
Corona, CA 92878
(951) 268-6268

City of Murrieta
N/S: Monroe Avenue
E/W: Murrieta Hot Springs Road
Weather: Sunny

File Name : MURMOMHSPM
Site Code : 10266066
Start Date : 11/30/2010
Page No : 1

Groups Printed- Total Volume

	Monroe Avenue Southbound			Murrieta Hot Springs Road Westbound			Murrieta Hot Springs Road Eastbound			
Start Time	Left	Right	App. Total	Thru	Right	App. Total	Left	Thru	App. Total	Int. Total
04:00 PM	0	27	27	491	3	494	29	435	464	985
04:15 PM	0	33	33	390	5	395	35	508	543	971
04:30 PM	0	40	40	441	5	446	26	462	488	974
04:45 PM	0	37	37	368	5	373	43	570	613	1023
Total	0	137	137	1690	18	1708	133	1975	2108	3953
05:00 PM	0	33	33	427	7	434	36	512	548	1015
05:15 PM	0	34	34	385	12	397	65	555	620	1051
05:30 PM	0	26	26	394	6	400	83	474	557	983
05:45 PM	0	20	20	338	7	345	85	489	574	939
Total	0	113	113	1544	32	1576	269	2030	2299	3988
Grand Total	0	250	250	3234	50	3284	402	4005	4407	7941
Apprch %	0	100		98.5	1.5		9.1	90.9		
Total %	0	3.1	3.1	40.7	0.6	41.4	5.1	50.4	55.5	

	Monroe Avenue Southbound			Murrieta Hot Springs Road Westbound			Murrieta Hot Springs Road Eastbound			
Start Time	Left	Right	App. Total	Thru	Right	App. Total	Left	Thru	App. Total	Int. Total
Peak Hour Analysis From 04:00 PM to 05:45 PM - Peak 1 of 1										
Peak Hour for Entire Intersection Begins at 04:45 PM										
04:45 PM	0	**37**	**37**	368	5	373	43	**570**	613	1023
05:00 PM	0	33	33	**427**	7	**434**	36	512	548	1015
05:15 PM	0	34	34	385	**12**	397	65	555	**620**	**1051**
05:30 PM	0	26	26	394	6	400	**83**	474	557	983
Total Volume	0	130	130	1574	30	1604	227	2111	2338	4072
% App. Total	0	100		98.1	1.9		9.7	90.3		
PHF	.000	.878	.878	.922	.625	.924	.684	.926	.943	.969

Counts Unlimited Inc.
PO Box 1178
Corona, CA 92878
(951) 268-6268

City of Murrieta
N/S: Monroe Avenue
E/W: Murrieta Hot Springs Road
Weather: Sunny

File Name : MURMOMHSPM
Site Code : 10266066
Start Date : 11/30/2010
Page No : 2

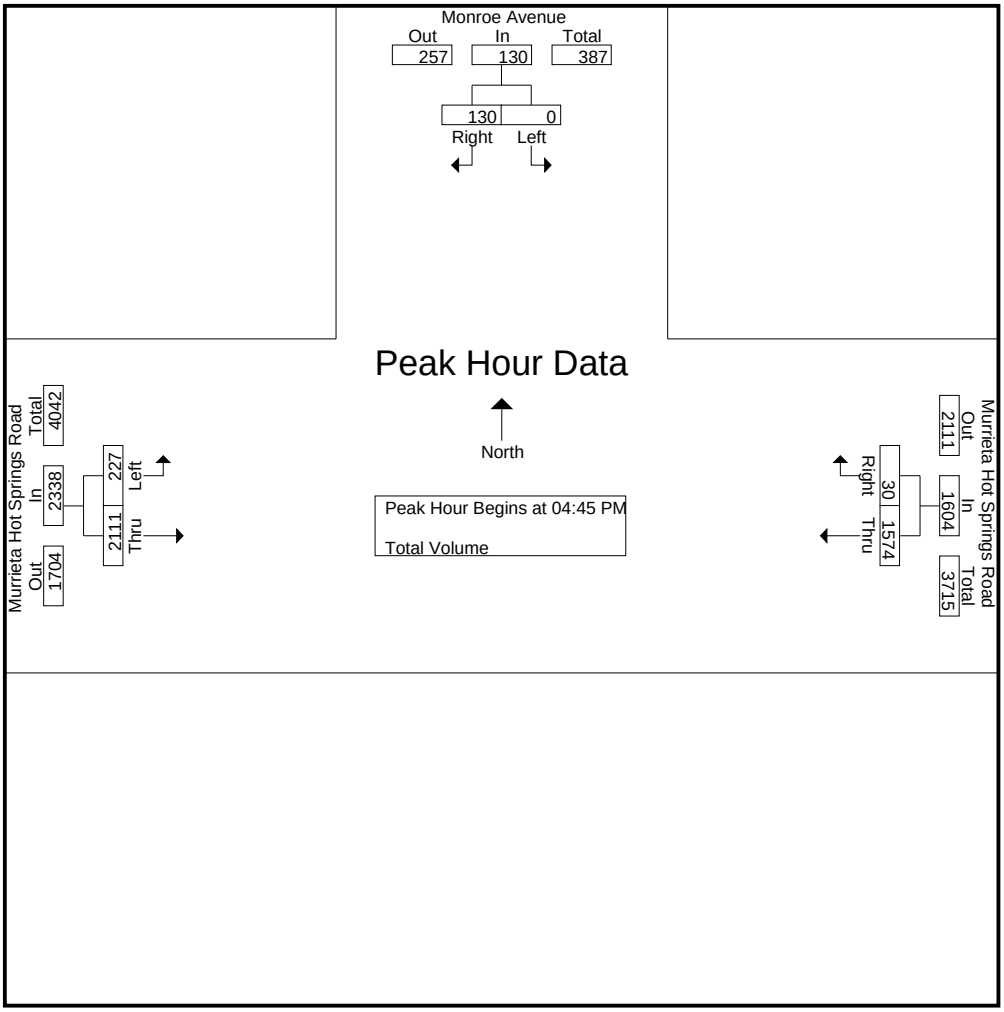

Peak Hour Analysis From 04:00 PM to 05:45 PM - Peak 1 of 1

Peak Hour for Each Approach Begins at:

	04:30 PM			04:00 PM			04:45 PM		
+0 mins.	0	**40**	**40**	**491**	3	**494**	43	**570**	613
+15 mins.	0	37	37	390	**5**	395	36	512	548
+30 mins.	0	33	33	441	5	446	65	555	**620**
+45 mins.	0	34	34	368	5	373	**83**	474	557
Total Volume	0	144	144	1690	18	1708	227	2111	2338
% App. Total	0	100		98.9	1.1		9.7	90.3	
PHF	.000	.900	.900	.860	.900	.864	.684	.926	.943

Counts Unlimited Inc.
PO Box 1178
Corona, CA 92878
(951) 268-6268

City of Murrieta
N/S: Hancock Avenue
E/W: Murrieta Hot Springs Road
Weather: Sunny

File Name : MURHAMHSAM
Site Code : 10266048
Start Date : 11/30/2010
Page No : 1

Groups Printed- Total Volume

	Hancock Avenue Southbound			Murrieta Hot Springs Road Westbound			Murrieta Hot Springs Road Eastbound			
Start Time	Left	Right	App. Total	Thru	Right	App. Total	Left	Thru	App. Total	Int. Total
07:00 AM	28	22	50	281	42	323	21	124	145	518
07:15 AM	41	30	71	303	72	375	33	171	204	650
07:30 AM	78	37	115	344	75	419	42	220	262	796
07:45 AM	82	43	125	370	115	485	42	226	268	878
Total	229	132	361	1298	304	1602	138	741	879	2842
08:00 AM	53	28	81	296	113	409	41	210	251	741
08:15 AM	59	38	97	339	122	461	60	220	280	838
08:30 AM	74	39	113	346	106	452	54	224	278	843
08:45 AM	78	42	120	365	123	488	72	230	302	910
Total	264	147	411	1346	464	1810	227	884	1111	3332
Grand Total	493	279	772	2644	768	3412	365	1625	1990	6174
Apprch %	63.9	36.1		77.5	22.5		18.3	81.7		
Total %	8	4.5	12.5	42.8	12.4	55.3	5.9	26.3	32.2	

	Hancock Avenue Southbound			Murrieta Hot Springs Road Westbound			Murrieta Hot Springs Road Eastbound			
Start Time	Left	Right	App. Total	Thru	Right	App. Total	Left	Thru	App. Total	Int. Total
Peak Hour Analysis From 07:00 AM to 08:45 AM - Peak 1 of 1										
Peak Hour for Entire Intersection Begins at 08:00 AM										
08:00 AM	53	28	81	296	113	409	41	210	251	741
08:15 AM	59	38	97	339	122	461	60	220	280	838
08:30 AM	74	39	113	346	106	452	54	224	278	843
08:45 AM	**78**	**42**	**120**	**365**	**123**	**488**	**72**	**230**	**302**	**910**
Total Volume	264	147	411	1346	464	1810	227	884	1111	3332
% App. Total	64.2	35.8		74.4	25.6		20.4	79.6		
PHF	.846	.875	.856	.922	.943	.927	.788	.961	.920	.915

Counts Unlimited Inc.
PO Box 1178
Corona, CA 92878
(951) 268-6268

City of Murrieta
N/S: Hancock Avenue
E/W: Murrieta Hot Springs Road
Weather: Sunny

File Name : MURHAMHSAM
Site Code : 10266048
Start Date : 11/30/2010
Page No : 2

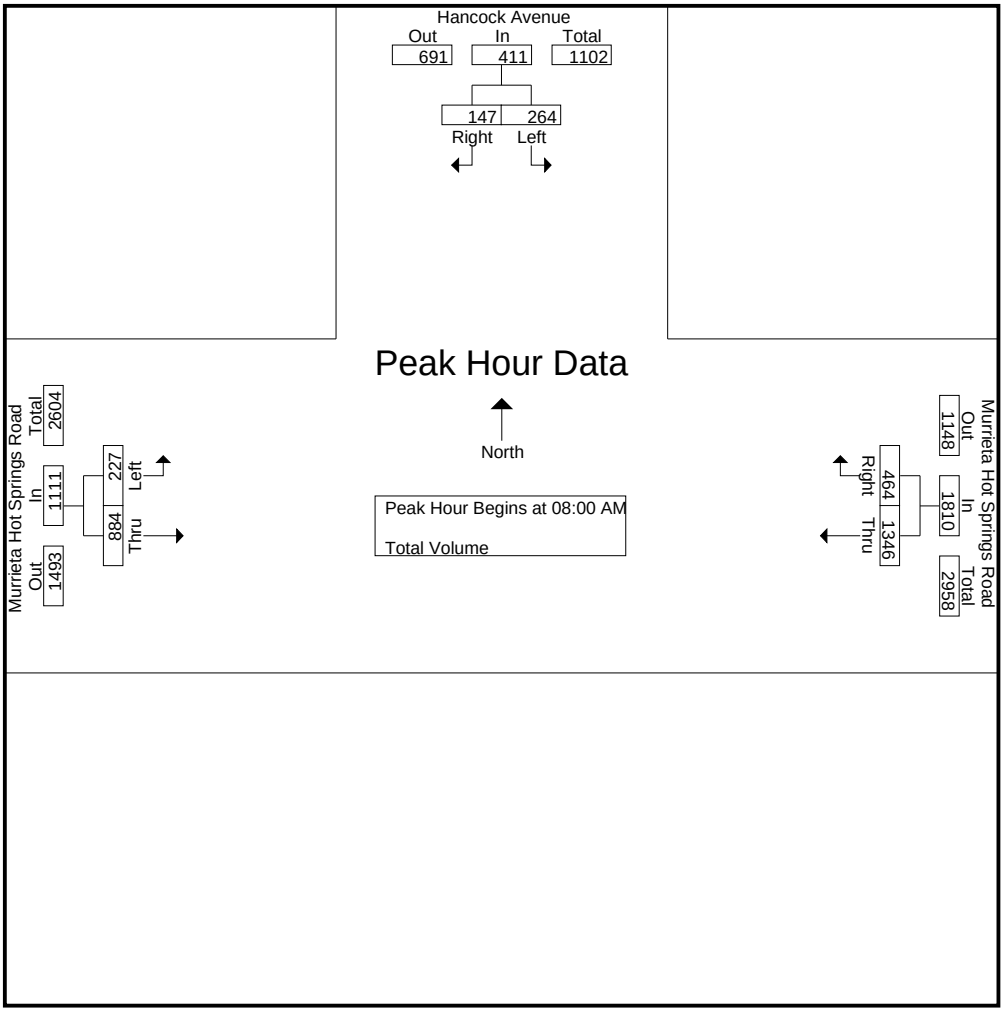

Peak Hour Analysis From 07:00 AM to 08:45 AM - Peak 1 of 1

Peak Hour for Each Approach Begins at:

	07:30 AM			08:00 AM			08:00 AM		
+0 mins.	78	37	115	296	113	409	41	210	251
+15 mins.	**82**	**43**	**125**	339	122	461	60	220	280
+30 mins.	53	28	81	346	106	452	54	224	278
+45 mins.	59	38	97	**365**	**123**	**488**	**72**	**230**	**302**
Total Volume	272	146	418	1346	464	1810	227	884	1111
% App. Total	65.1	34.9		74.4	25.6		20.4	79.6	
PHF	.829	.849	.836	.922	.943	.927	.788	.961	.920

Counts Unlimited Inc.
PO Box 1178
Corona, CA 92878
(951) 268-6268

City of Murrieta
N/S: Hancock Avenue
E/W: Murrieta Hot Springs Road
Weather: Sunny

File Name : MURHAMHSPM
Site Code : 10266048
Start Date : 11/30/2010
Page No : 1

Groups Printed- Total Volume

	Hancock Avenue Southbound			Murrieta Hot Springs Road Westbound			Murrieta Hot Springs Road Eastbound			
Start Time	Left	Right	App. Total	Thru	Right	App. Total	Left	Thru	App. Total	Int. Total
04:00 PM	115	57	172	386	114	500	53	407	460	1132
04:15 PM	115	51	166	381	120	501	65	421	486	1153
04:30 PM	131	47	178	356	106	462	51	440	491	1131
04:45 PM	120	49	169	379	101	480	57	478	535	1184
Total	481	204	685	1502	441	1943	226	1746	1972	4600
05:00 PM	185	49	234	339	106	445	65	461	526	1205
05:15 PM	133	38	171	391	108	499	64	545	609	1279
05:30 PM	160	52	212	299	84	383	71	389	460	1055
05:45 PM	108	33	141	323	89	412	46	467	513	1066
Total	586	172	758	1352	387	1739	246	1862	2108	4605
Grand Total	1067	376	1443	2854	828	3682	472	3608	4080	9205
Apprch %	73.9	26.1		77.5	22.5		11.6	88.4		
Total %	11.6	4.1	15.7	31	9	40	5.1	39.2	44.3	

	Hancock Avenue Southbound			Murrieta Hot Springs Road Westbound			Murrieta Hot Springs Road Eastbound			
Start Time	Left	Right	App. Total	Thru	Right	App. Total	Left	Thru	App. Total	Int. Total
Peak Hour Analysis From 04:00 PM to 05:45 PM - Peak 1 of 1										
Peak Hour for Entire Intersection Begins at 04:30 PM										
04:30 PM	131	47	178	356	106	462	51	440	491	1131
04:45 PM	120	**49**	169	379	101	480	57	478	535	1184
05:00 PM	**185**	49	**234**	339	106	445	**65**	461	526	1205
05:15 PM	133	38	171	**391**	**108**	**499**	64	**545**	**609**	**1279**
Total Volume	569	183	752	1465	421	1886	237	1924	2161	4799
% App. Total	75.7	24.3		77.7	22.3		11	89		
PHF	.769	.934	.803	.937	.975	.945	.912	.883	.887	.938

Counts Unlimited Inc.
PO Box 1178
Corona, CA 92878
(951) 268-6268

City of Murrieta
N/S: Hancock Avenue
E/W: Murrieta Hot Springs Road
Weather: Sunny

File Name : MURHAMHSPM
Site Code : 10266048
Start Date : 11/30/2010
Page No : 2

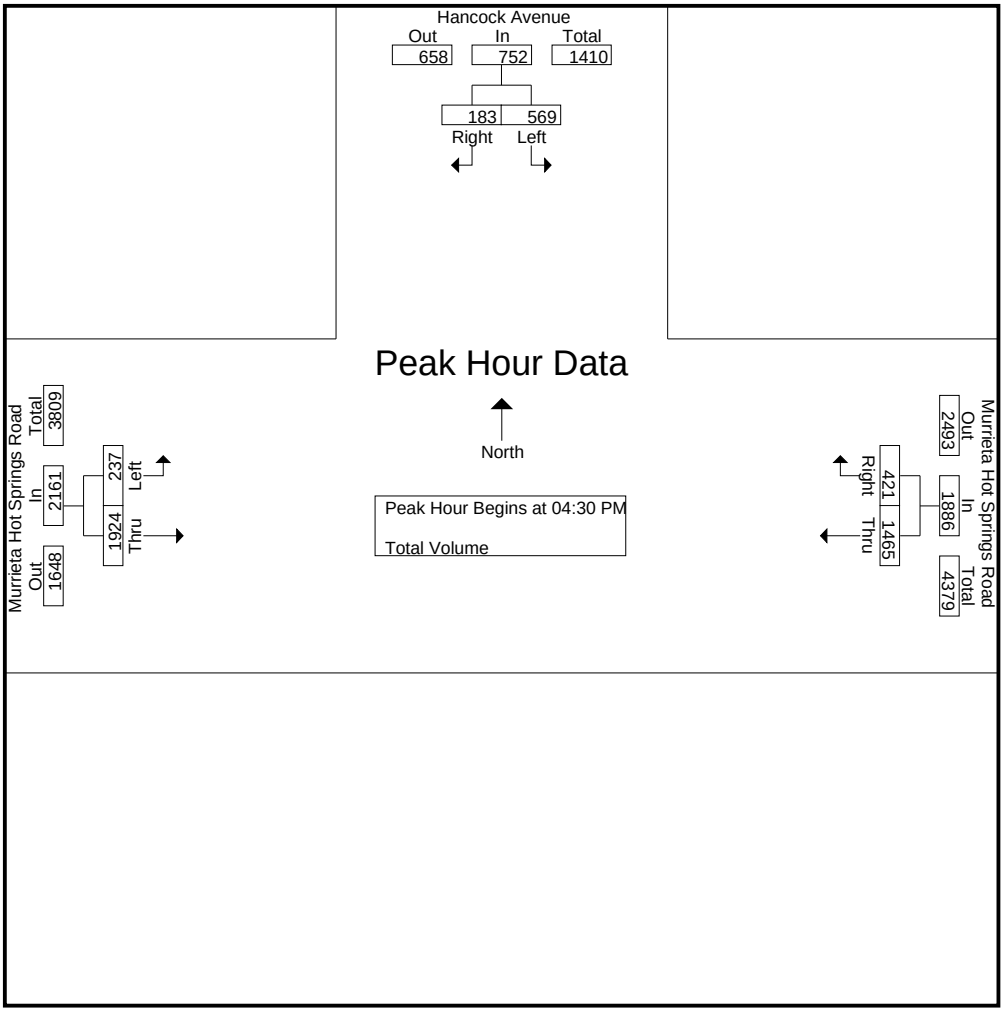

Peak Hour Analysis From 04:00 PM to 05:45 PM - Peak 1 of 1

Peak Hour for Each Approach Begins at:

	04:45 PM			04:00 PM			04:30 PM		
+0 mins.	120	49	169	**386**	114	500	51	440	491
+15 mins.	**185**	49	**234**	381	**120**	**501**	57	478	535
+30 mins.	133	38	171	356	106	462	**65**	461	526
+45 mins.	160	**52**	212	379	101	480	64	**545**	**609**
Total Volume	598	188	786	1502	441	1943	237	1924	2161
% App. Total	76.1	23.9		77.3	22.7		11	89	
PHF	.808	.904	.840	.973	.919	.970	.912	.883	.887

Counts Unlimited Inc.
PO Box 1178
Corona, CA 92878
(951) 268-6268

City of Murrieta
N/S: Alta Murrieta Drive
E/W: Murrieta Hot Springs Road
Weather: Sunny

File Name : MURAMMHSAM
Site Code : 10266044
Start Date : 11/30/2010
Page No : 1

Groups Printed- Total Volume

	Alta Murrieta Drive Southbound				Murrieta Hot Springs Road Westbound				Alta Murrieta Drive Northbound				Murrieta Hot Springs Road Eastbound				
Start Time	Left	Thru	Right	App. Total	Left	Thru	Right	App. Total	Left	Thru	Right	App. Total	Left	Thru	Right	App. Total	Int. Total
07:00 AM	3	8	102	113	10	402	11	423	54	7	1	62	23	166	33	222	820
07:15 AM	3	10	75	88	15	403	2	420	52	8	5	65	30	208	36	274	847
07:30 AM	8	12	58	78	7	380	8	395	51	6	3	60	22	285	35	342	875
07:45 AM	21	9	72	102	11	334	13	358	43	3	4	50	46	326	45	417	927
Total	35	39	307	381	43	1519	34	1596	200	24	13	237	121	985	149	1255	3469
08:00 AM	9	14	58	81	9	349	25	383	41	10	6	57	50	264	55	369	890
08:15 AM	13	27	77	117	18	329	23	370	46	14	1	61	64	232	51	347	895
08:30 AM	23	32	88	143	21	311	35	367	50	18	2	70	64	222	61	347	927
08:45 AM	16	21	74	111	24	361	24	409	38	15	5	58	71	277	68	416	994
Total	61	94	297	452	72	1350	107	1529	175	57	14	246	249	995	235	1479	3706
Grand Total	96	133	604	833	115	2869	141	3125	375	81	27	483	370	1980	384	2734	7175
Apprch %	11.5	16	72.5		3.7	91.8	4.5		77.6	16.8	5.6		13.5	72.4	14		
Total %	1.3	1.9	8.4	11.6	1.6	40	2	43.6	5.2	1.1	0.4	6.7	5.2	27.6	5.4	38.1	

	Alta Murrieta Drive Southbound				Murrieta Hot Springs Road Westbound				Alta Murrieta Drive Northbound				Murrieta Hot Springs Road Eastbound				
Start Time	Left	Thru	Right	App. Total	Left	Thru	Right	App. Total	Left	Thru	Right	App. Total	Left	Thru	Right	App. Total	Int. Total
Peak Hour Analysis From 07:00 AM to 08:45 AM - Peak 1 of 1																	
Peak Hour for Entire Intersection Begins at 08:00 AM																	
08:00 AM	9	14	58	81	9	349	25	383	41	10	**6**	57	50	264	55	369	890
08:15 AM	13	27	77	117	18	329	23	370	46	14	1	61	64	232	51	347	895
08:30 AM	**23**	**32**	**88**	**143**	21	311	**35**	367	**50**	**18**	2	**70**	64	222	61	347	927
08:45 AM	16	21	74	111	**24**	**361**	24	**409**	38	15	5	58	**71**	**277**	**68**	**416**	**994**
Total Volume	61	94	297	452	72	1350	107	1529	175	57	14	246	249	995	235	1479	3706
% App. Total	13.5	20.8	65.7		4.7	88.3	7		71.1	23.2	5.7		16.8	67.3	15.9		
PHF	.663	.734	.844	.790	.750	.935	.764	.935	.875	.792	.583	.879	.877	.898	.864	.889	.932

Counts Unlimited Inc.
PO Box 1178
Corona, CA 92878
(951) 268-6268

City of Murrieta
N/S: Alta Murrieta Drive
E/W: Murrieta Hot Springs Road
Weather: Sunny

File Name : MURAMMHSAM
Site Code : 10266044
Start Date : 11/30/2010
Page No : 2

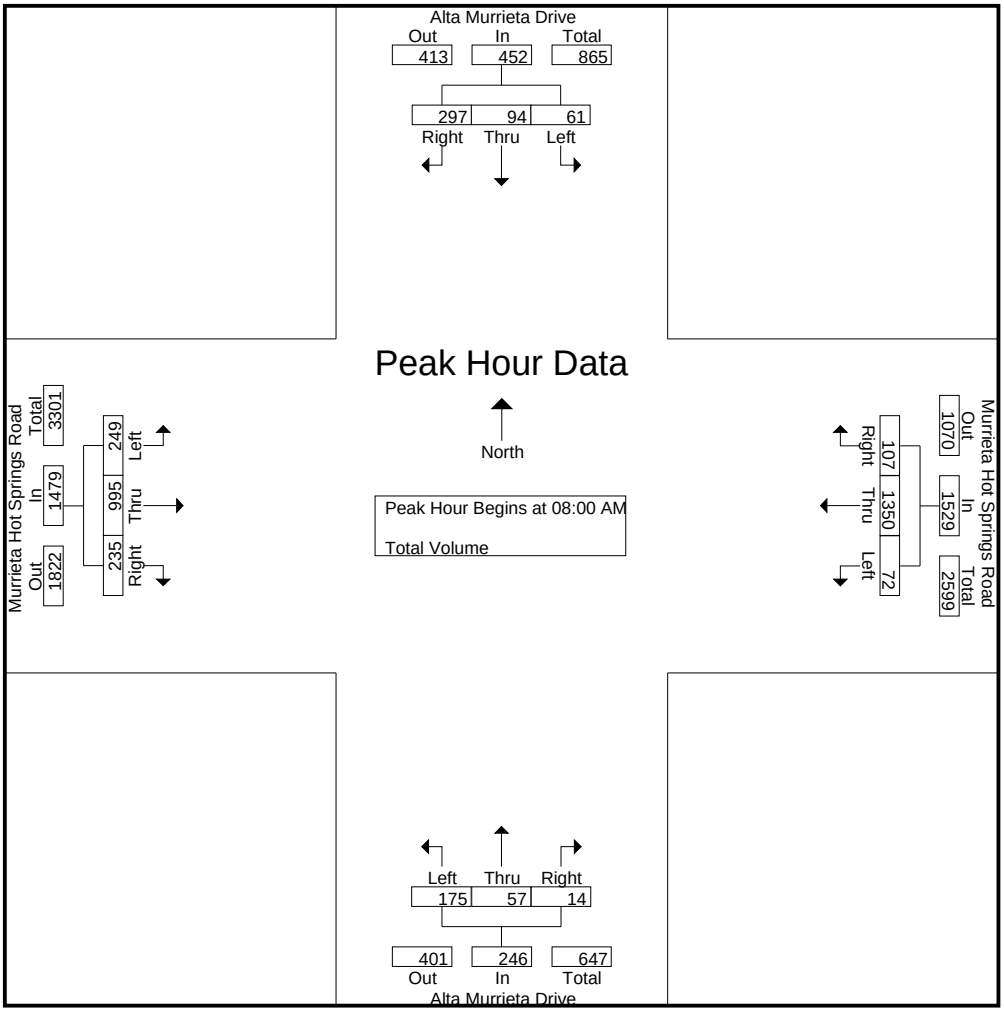

Peak Hour Analysis From 07:00 AM to 08:45 AM - Peak 1 of 1

Peak Hour for Each Approach Begins at:

	08:00 AM				07:00 AM				08:00 AM				07:45 AM			
+0 mins.	9	14	58	81	10	402	11	**423**	41	10	**6**	57	46	**326**	45	**417**
+15 mins.	13	27	77	117	**15**	**403**	2	420	46	14	1	61	50	264	55	369
+30 mins.	**23**	**32**	**88**	**143**	7	380	8	395	**50**	**18**	2	**70**	**64**	232	51	347
+45 mins.	16	21	74	111	11	334	**13**	358	38	15	5	58	64	222	**61**	347
Total Volume	61	94	297	452	43	1519	34	1596	175	57	14	246	224	1044	212	1480
% App. Total	13.5	20.8	65.7		2.7	95.2	2.1		71.1	23.2	5.7		15.1	70.5	14.3	
PHF	.663	.734	.844	.790	.717	.942	.654	.943	.875	.792	.583	.879	.875	.801	.869	.887

Counts Unlimited Inc.
PO Box 1178
Corona, CA 92878
(951) 268-6268

City of Murrieta
N/S: Alta Murrieta Drive
E/W: Murrieta Hot Springs Road
Weather: Sunny

File Name : MURAMMHSPM
Site Code : 10266044
Start Date : 11/30/2010
Page No : 1

Groups Printed- Total Volume

	Alta Murrieta Drive Southbound				Murrieta Hot Springs Road Westbound				Alta Murrieta Drive Northbound				Murrieta Hot Springs Road Eastbound				
Start Time	Left	Thru	Right	App. Total	Left	Thru	Right	App. Total	Left	Thru	Right	App. Total	Left	Thru	Right	App. Total	Int. Total
04:00 PM	50	24	96	170	41	360	46	447	99	28	6	133	151	421	133	705	1455
04:15 PM	58	22	104	184	29	294	35	358	96	59	13	168	137	381	121	639	1349
04:30 PM	40	29	107	176	27	375	40	442	101	43	9	153	178	422	108	708	1479
04:45 PM	57	35	99	191	42	271	36	349	100	42	13	155	177	397	130	704	1399
Total	205	110	406	721	139	1300	157	1596	396	172	41	609	643	1621	492	2756	5682
05:00 PM	50	29	98	177	30	356	17	403	89	52	10	151	180	451	131	762	1493
05:15 PM	61	39	108	208	20	291	19	330	104	58	13	175	182	427	130	739	1452
05:30 PM	58	30	91	179	23	289	22	334	95	42	13	150	145	377	91	613	1276
05:45 PM	38	31	51	120	31	232	27	290	108	42	12	162	141	325	111	577	1149
Total	207	129	348	684	104	1168	85	1357	396	194	48	638	648	1580	463	2691	5370
Grand Total	412	239	754	1405	243	2468	242	2953	792	366	89	1247	1291	3201	955	5447	11052
Apprch %	29.3	17	53.7		8.2	83.6	8.2		63.5	29.4	7.1		23.7	58.8	17.5		
Total %	3.7	2.2	6.8	12.7	2.2	22.3	2.2	26.7	7.2	3.3	0.8	11.3	11.7	29	8.6	49.3	

	Alta Murrieta Drive Southbound				Murrieta Hot Springs Road Westbound				Alta Murrieta Drive Northbound				Murrieta Hot Springs Road Eastbound				
Start Time	Left	Thru	Right	App. Total	Left	Thru	Right	App. Total	Left	Thru	Right	App. Total	Left	Thru	Right	App. Total	Int. Total
Peak Hour Analysis From 04:00 PM to 05:45 PM - Peak 1 of 1																	
Peak Hour for Entire Intersection Begins at 04:30 PM																	
04:30 PM	40	29	107	176	27	**375**	**40**	**442**	101	43	9	153	178	422	108	708	1479
04:45 PM	57	35	99	191	**42**	271	36	349	100	42	**13**	155	177	397	130	704	1399
05:00 PM	50	29	98	177	30	356	17	403	89	52	10	151	180	**451**	**131**	**762**	**1493**
05:15 PM	**61**	**39**	**108**	**208**	20	291	19	330	**104**	**58**	13	**175**	**182**	427	130	739	1452
Total Volume	208	132	412	752	119	1293	112	1524	394	195	45	634	717	1697	499	2913	5823
% App. Total	27.7	17.6	54.8		7.8	84.8	7.3		62.1	30.8	7.1		24.6	58.3	17.1		
PHF	.852	.846	.954	.904	.708	.862	.700	.862	.947	.841	.865	.906	.985	.941	.952	.956	.975

Counts Unlimited Inc.
PO Box 1178
Corona, CA 92878
(951) 268-6268

City of Murrieta
N/S: Alta Murrieta Drive
E/W: Murrieta Hot Springs Road
Weather: Sunny

File Name : MURAMMHSPM
Site Code : 10266044
Start Date : 11/30/2010
Page No : 2

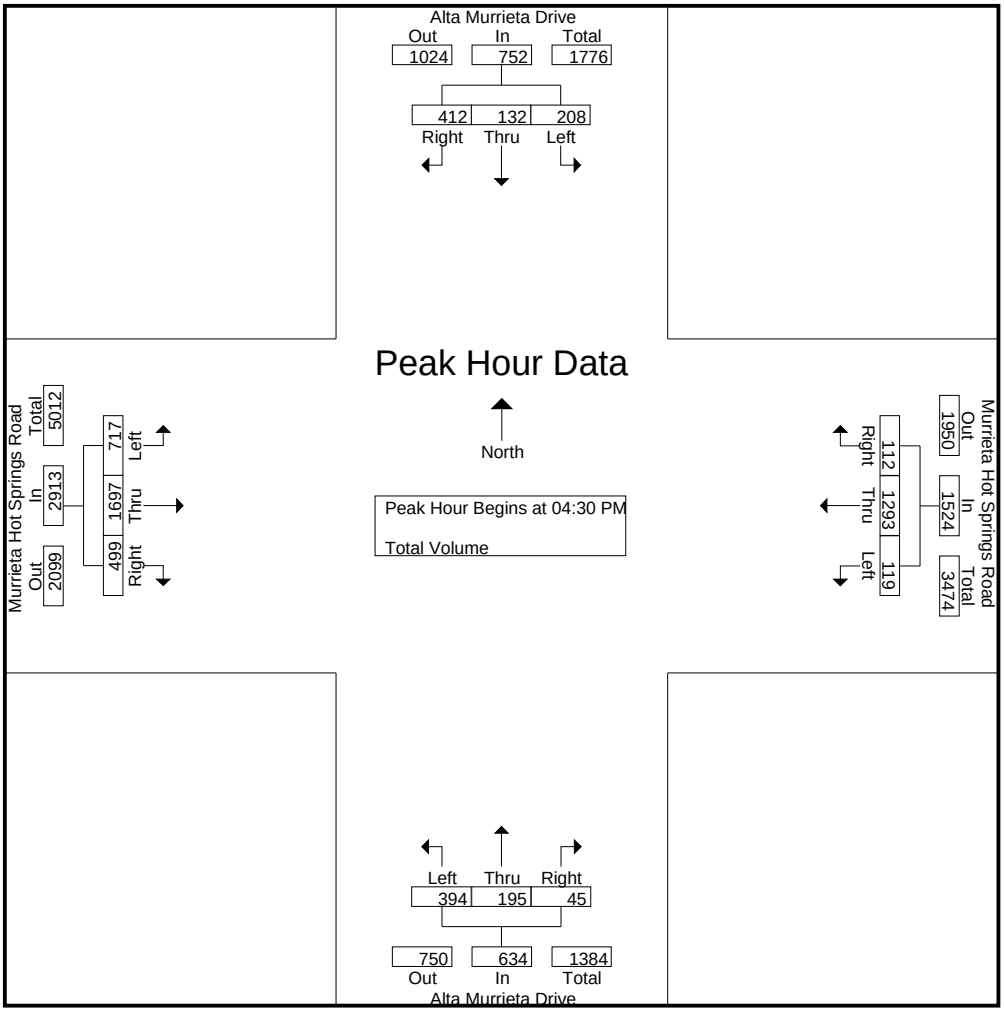

Peak Hour Analysis From 04:00 PM to 05:45 PM - Peak 1 of 1

Peak Hour for Each Approach Begins at:

	04:45 PM				04:00 PM				05:00 PM				04:30 PM			
+0 mins.	57	35	99	191	41	360	**46**	**447**	89	52	10	151	178	422	108	708
+15 mins.	50	29	98	177	29	294	35	358	104	**58**	**13**	**175**	177	397	130	704
+30 mins.	**61**	**39**	**108**	**208**	27	**375**	40	442	95	42	13	150	180	**451**	**131**	**762**
+45 mins.	58	30	91	179	**42**	271	36	349	**108**	42	12	162	**182**	427	130	739
Total Volume	226	133	396	755	139	1300	157	1596	396	194	48	638	717	1697	499	2913
% App. Total	29.9	17.6	52.5		8.7	81.5	9.8		62.1	30.4	7.5		24.6	58.3	17.1	
PHF	.926	.853	.917	.907	.827	.867	.853	.893	.917	.836	.923	.911	.985	.941	.952	.956

Counts Unlimited Inc.
PO Box 1178
Corona, CA 92878
(951) 268-6268

City of Murrieta
N/S: Winchester Road (SR-79)
E/W: Murrieta Hot Springs Road
Weather: Sunny

File Name : MURWIMHSAM
Site Code : 10266661
Start Date : 12/1/2010
Page No : 1

Groups Printed- Total Volume

	Winchester Road (SR-79) Southbound				Murrieta Hot Springs Road Westbound				Winchester Road (SR-79) Northbound				Murrieta Hot Springs Road Eastbound				
Start Time	Left	Thru	Right	App. Total	Left	Thru	Right	App. Total	Left	Thru	Right	App. Total	Left	Thru	Right	App. Total	Int. Total
07:00 AM	18	349	89	456	84	89	3	176	37	184	38	259	86	39	34	159	1050
07:15 AM	7	353	127	487	65	86	7	158	51	219	41	311	106	48	23	177	1133
07:30 AM	21	359	131	511	53	75	9	137	43	211	28	282	114	64	18	196	1126
07:45 AM	25	380	138	543	53	75	9	137	22	178	33	233	154	90	31	275	1188
Total	71	1441	485	1997	255	325	28	608	153	792	140	1085	460	241	106	807	4497
08:00 AM	26	331	113	470	75	96	13	184	28	184	38	250	125	66	22	213	1117
08:15 AM	37	357	144	538	73	93	6	172	30	207	31	268	120	62	32	214	1192
08:30 AM	40	340	141	521	67	76	9	152	38	160	33	231	113	100	52	265	1169
08:45 AM	26	305	131	462	92	119	14	225	43	162	23	228	102	89	23	214	1129
Total	129	1333	529	1991	307	384	42	733	139	713	125	977	460	317	129	906	4607
Grand Total	200	2774	1014	3988	562	709	70	1341	292	1505	265	2062	920	558	235	1713	9104
Apprch %	5	69.6	25.4		41.9	52.9	5.2		14.2	73	12.9		53.7	32.6	13.7		
Total %	2.2	30.5	11.1	43.8	6.2	7.8	0.8	14.7	3.2	16.5	2.9	22.6	10.1	6.1	2.6	18.8	

	Winchester Road (SR-79) Southbound				Murrieta Hot Springs Road Westbound				Winchester Road (SR-79) Northbound				Murrieta Hot Springs Road Eastbound				
Start Time	Left	Thru	Right	App. Total	Left	Thru	Right	App. Total	Left	Thru	Right	App. Total	Left	Thru	Right	App. Total	Int. Total
Peak Hour Analysis From 07:00 AM to 08:45 AM - Peak 1 of 1																	
Peak Hour for Entire Intersection Begins at 07:45 AM																	
07:45 AM	25	**380**	138	**543**	53	75	9	137	22	178	33	233	**154**	90	31	**275**	1188
08:00 AM	26	331	113	470	**75**	**96**	**13**	**184**	28	184	**38**	250	125	66	22	213	1117
08:15 AM	37	357	**144**	538	73	93	6	172	30	**207**	31	**268**	120	62	32	214	**1192**
08:30 AM	**40**	340	141	521	67	76	9	152	**38**	160	33	231	113	**100**	**52**	265	1169
Total Volume	128	1408	536	2072	268	340	37	645	118	729	135	982	512	318	137	967	4666
% App. Total	6.2	68	25.9		41.6	52.7	5.7		12	74.2	13.7		52.9	32.9	14.2		
PHF	.800	.926	.931	.954	.893	.885	.712	.876	.776	.880	.888	.916	.831	.795	.659	.879	.979

Counts Unlimited Inc.
PO Box 1178
Corona, CA 92878
(951) 268-6268

City of Murrieta
N/S: Winchester Road (SR-79)
E/W: Murrieta Hot Springs Road
Weather: Sunny

File Name : MURWIMHSAM
Site Code : 10266661
Start Date : 12/1/2010
Page No : 2

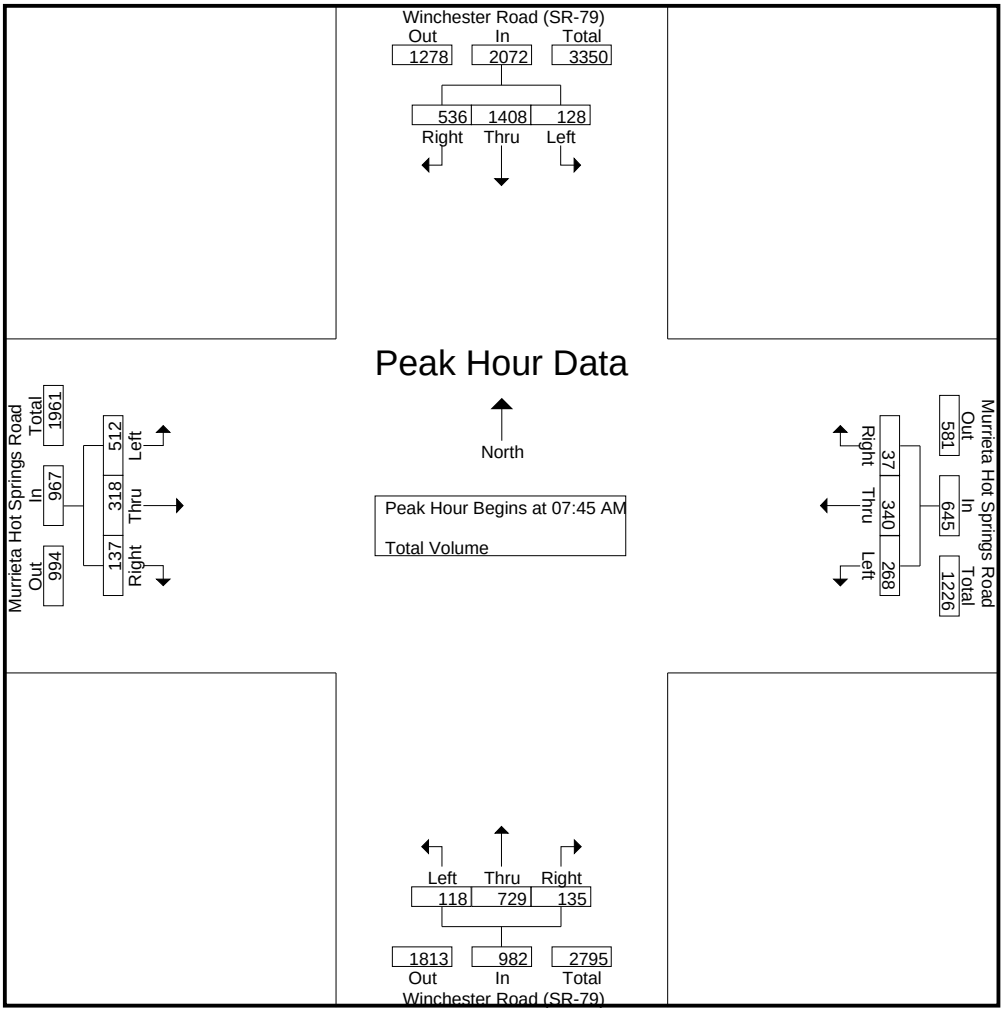

Peak Hour Analysis From 07:00 AM to 08:45 AM - Peak 1 of 1

Peak Hour for Each Approach Begins at:

	07:45 AM				08:00 AM				07:00 AM				07:45 AM			
+0 mins.	25	**380**	138	**543**	75	96	13	184	37	184	38	259	**154**	90	31	**275**
+15 mins.	26	331	113	470	73	93	6	172	**51**	**219**	**41**	**311**	125	66	22	213
+30 mins.	37	357	**144**	538	67	76	9	152	43	211	28	282	120	62	32	214
+45 mins.	**40**	340	141	521	**92**	**119**	**14**	**225**	22	178	33	233	113	**100**	**52**	265
Total Volume	128	1408	536	2072	307	384	42	733	153	792	140	1085	512	318	137	967
% App. Total	6.2	68	25.9		41.9	52.4	5.7		14.1	73	12.9		52.9	32.9	14.2	
PHF	.800	.926	.931	.954	.834	.807	.750	.814	.750	.904	.854	.872	.831	.795	.659	.879

Counts Unlimited Inc.
PO Box 1178
Corona, CA 92878
(951) 268-6268

City of Murrieta
N/S: Winchester Road (SR-79)
E/W: Murrieta Hot Springs Road
Weather: Sunny

File Name : MURWIMHSPM
Site Code : 10266661
Start Date : 12/1/2010
Page No : 1

Groups Printed- Total Volume

	Winchester Road (SR-79) Southbound				Murrieta Hot Springs Road Westbound				Winchester Road (SR-79) Northbound				Murrieta Hot Springs Road Eastbound				
Start Time	Left	Thru	Right	App. Total	Left	Thru	Right	App. Total	Left	Thru	Right	App. Total	Left	Thru	Right	App. Total	Int. Total
04:00 PM	33	228	112	373	60	95	17	172	58	419	45	522	141	107	30	278	1345
04:15 PM	30	237	106	373	70	87	11	168	70	381	43	494	166	142	45	353	1388
04:30 PM	26	283	151	460	63	113	17	193	56	469	54	579	153	117	57	327	1559
04:45 PM	34	257	99	390	67	108	24	199	64	417	54	535	139	147	51	337	1461
Total	123	1005	468	1596	260	403	69	732	248	1686	196	2130	599	513	183	1295	5753
05:00 PM	32	287	142	461	73	104	10	187	60	422	53	535	153	116	54	323	1506
05:15 PM	52	239	108	399	69	95	14	178	62	259	49	370	185	148	46	379	1326
05:30 PM	38	265	111	414	60	107	14	181	55	257	39	351	205	175	63	443	1389
05:45 PM	30	226	87	343	83	71	17	171	46	377	60	483	221	163	42	426	1423
Total	152	1017	448	1617	285	377	55	717	223	1315	201	1739	764	602	205	1571	5644
Grand Total	275	2022	916	3213	545	780	124	1449	471	3001	397	3869	1363	1115	388	2866	11397
Apprch %	8.6	62.9	28.5		37.6	53.8	8.6		12.2	77.6	10.3		47.6	38.9	13.5		
Total %	2.4	17.7	8	28.2	4.8	6.8	1.1	12.7	4.1	26.3	3.5	33.9	12	9.8	3.4	25.1	

	Winchester Road (SR-79) Southbound				Murrieta Hot Springs Road Westbound				Winchester Road (SR-79) Northbound				Murrieta Hot Springs Road Eastbound				
Start Time	Left	Thru	Right	App. Total	Left	Thru	Right	App. Total	Left	Thru	Right	App. Total	Left	Thru	Right	App. Total	Int. Total
Peak Hour Analysis From 04:00 PM to 05:45 PM - Peak 1 of 1																	
Peak Hour for Entire Intersection Begins at 04:15 PM																	
04:15 PM	30	237	106	373	70	87	11	168	**70**	381	43	494	**166**	142	45	**353**	1388
04:30 PM	26	283	**151**	460	63	**113**	17	193	56	**469**	**54**	**579**	153	117	**57**	327	**1559**
04:45 PM	**34**	257	99	390	67	108	**24**	**199**	64	417	54	535	139	**147**	51	337	1461
05:00 PM	32	**287**	142	**461**	**73**	104	10	187	60	422	53	535	153	116	54	323	1506
Total Volume	122	1064	498	1684	273	412	62	747	250	1689	204	2143	611	522	207	1340	5914
% App. Total	7.2	63.2	29.6		36.5	55.2	8.3		11.7	78.8	9.5		45.6	39	15.4		
PHF	.897	.927	.825	.913	.935	.912	.646	.938	.893	.900	.944	.925	.920	.888	.908	.949	.948

Counts Unlimited Inc.
PO Box 1178
Corona, CA 92878
(951) 268-6268

City of Murrieta
N/S: Winchester Road (SR-79)
E/W: Murrieta Hot Springs Road
Weather: Sunny

File Name : MURWIMHSPM
Site Code : 10266661
Start Date : 12/1/2010
Page No : 2

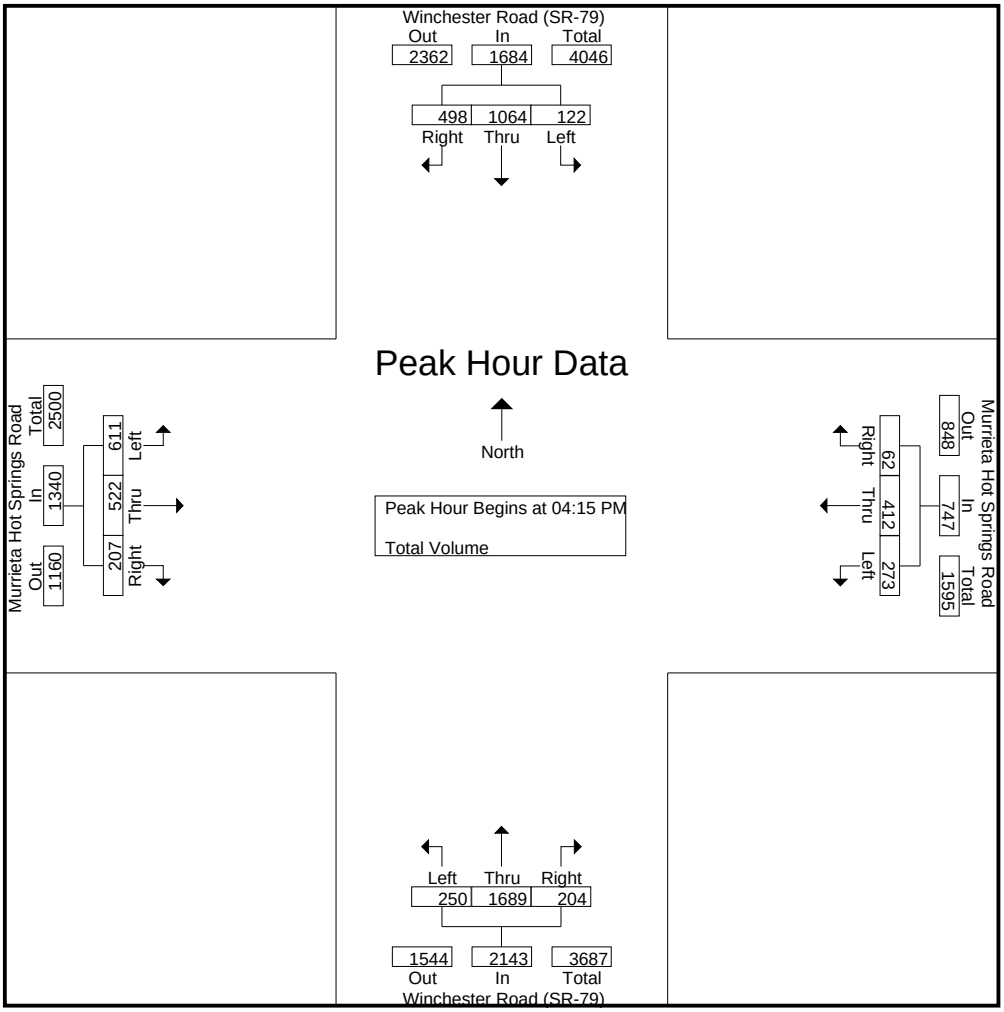

Peak Hour Analysis From 04:00 PM to 05:45 PM - Peak 1 of 1

Peak Hour for Each Approach Begins at:

	04:30 PM				04:30 PM				04:15 PM				05:00 PM			
+0 mins.	26	283	**151**	460	63	**113**	17	193	**70**	381	43	494	153	116	54	323
+15 mins.	34	257	99	390	67	108	**24**	**199**	56	**469**	**54**	**579**	185	148	46	379
+30 mins.	32	**287**	142	**461**	**73**	104	10	187	64	417	54	535	205	**175**	**63**	**443**
+45 mins.	**52**	239	108	399	69	95	14	178	60	422	53	535	**221**	163	42	426
Total Volume	144	1066	500	1710	272	420	65	757	250	1689	204	2143	764	602	205	1571
% App. Total	8.4	62.3	29.2		35.9	55.5	8.6		11.7	78.8	9.5		48.6	38.3	13	
PHF	.692	.929	.828	.927	.932	.929	.677	.951	.893	.900	.944	.925	.864	.860	.813	.887

Counts Unlimited Inc.
PO Box 1178
Corona, CA 92878
(951) 268-6268

City of Murrieta
N/S: Hancock Avenue
E/W: Los Alamos Road
Weather: Sunny

File Name : MURHALAAM
Site Code : 10266022
Start Date : 12/1/2010
Page No : 1

Groups Printed- Total Volume

	Hancock Avenue Southbound				Los Alamos Road Westbound				Hancock Avenue Northbound				Los Alamos Road Eastbound				
Start Time	Left	Thru	Right	App. Total	Left	Thru	Right	App. Total	Left	Thru	Right	App. Total	Left	Thru	Right	App. Total	Int. Total
07:00 AM	122	24	16	162	32	84	23	139	3	12	7	22	7	97	7	111	434
07:15 AM	132	31	22	185	30	94	41	165	5	16	11	32	16	116	11	143	525
07:30 AM	120	46	25	191	49	102	32	183	1	18	13	32	12	96	10	118	524
07:45 AM	118	53	26	197	58	158	53	269	11	24	21	56	17	117	9	143	665
Total	492	154	89	735	169	438	149	756	20	70	52	142	52	426	37	515	2148
08:00 AM	129	53	29	211	52	127	66	245	8	28	16	52	32	121	19	172	680
08:15 AM	111	61	45	217	57	160	82	299	21	46	33	100	43	127	14	184	800
08:30 AM	152	74	45	271	55	259	87	401	11	35	21	67	25	177	20	222	961
08:45 AM	134	58	37	229	62	165	58	285	11	34	23	68	25	176	13	214	796
Total	526	246	156	928	226	711	293	1230	51	143	93	287	125	601	66	792	3237
Grand Total	1018	400	245	1663	395	1149	442	1986	71	213	145	429	177	1027	103	1307	5385
Apprch %	61.2	24.1	14.7		19.9	57.9	22.3		16.6	49.7	33.8		13.5	78.6	7.9		
Total %	18.9	7.4	4.5	30.9	7.3	21.3	8.2	36.9	1.3	4	2.7	8	3.3	19.1	1.9	24.3	

	Hancock Avenue Southbound				Los Alamos Road Westbound				Hancock Avenue Northbound				Los Alamos Road Eastbound				
Start Time	Left	Thru	Right	App. Total	Left	Thru	Right	App. Total	Left	Thru	Right	App. Total	Left	Thru	Right	App. Total	Int. Total
Peak Hour Analysis From 07:00 AM to 08:45 AM - Peak 1 of 1																	
Peak Hour for Entire Intersection Begins at 08:00 AM																	
08:00 AM	129	53	29	211	52	127	66	245	8	28	16	52	32	121	19	172	680
08:15 AM	111	61	**45**	217	57	160	82	299	**21**	**46**	**33**	**100**	**43**	127	14	184	800
08:30 AM	**152**	**74**	45	**271**	55	**259**	**87**	**401**	11	35	21	67	25	**177**	**20**	**222**	**961**
08:45 AM	134	58	37	229	**62**	165	58	285	11	34	23	68	25	176	13	214	796
Total Volume	526	246	156	928	226	711	293	1230	51	143	93	287	125	601	66	792	3237
% App. Total	56.7	26.5	16.8		18.4	57.8	23.8		17.8	49.8	32.4		15.8	75.9	8.3		
PHF	.865	.831	.867	.856	.911	.686	.842	.767	.607	.777	.705	.718	.727	.849	.825	.892	.842

Counts Unlimited Inc.
PO Box 1178
Corona, CA 92878
(951) 268-6268

City of Murrieta
N/S: Hancock Avenue
E/W: Los Alamos Road
Weather: Sunny

File Name : MURHALAAM
Site Code : 10266022
Start Date : 12/1/2010
Page No : 2

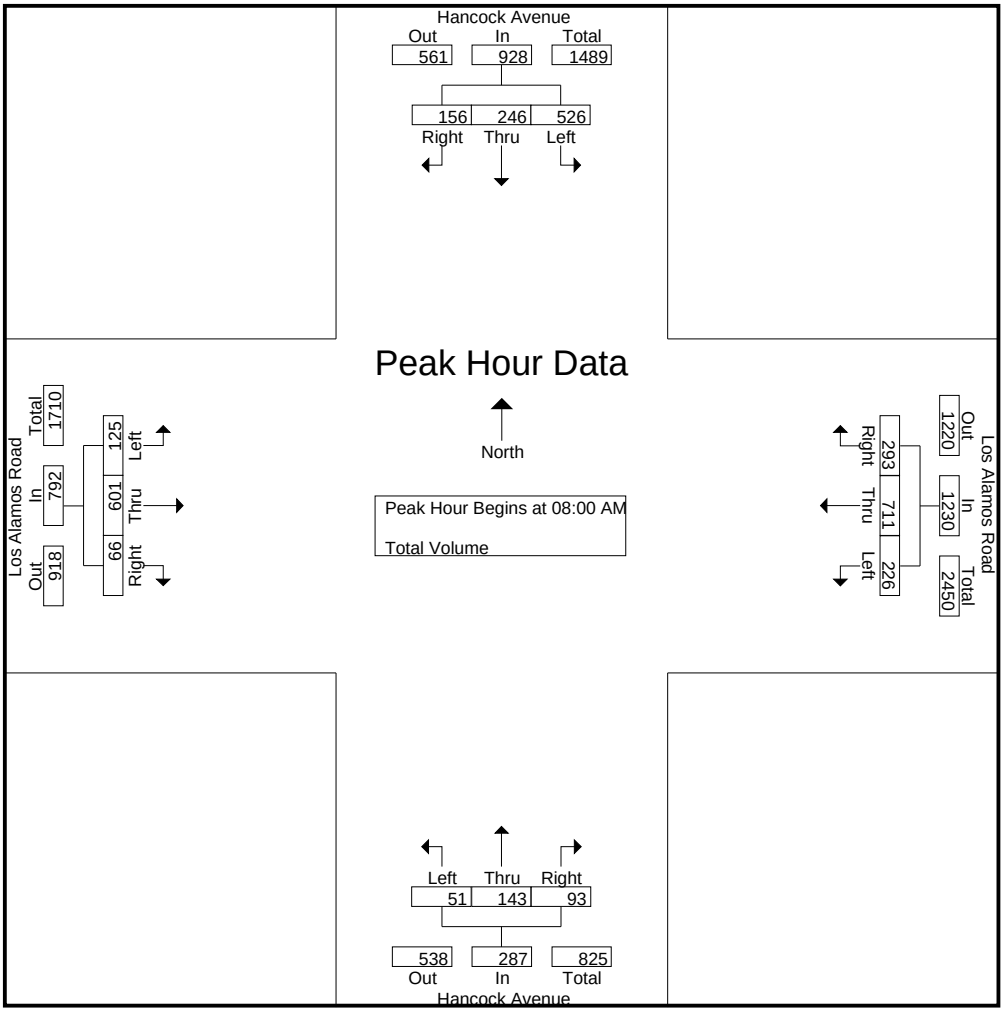

Peak Hour Analysis From 07:00 AM to 08:45 AM - Peak 1 of 1

Peak Hour for Each Approach Begins at:

	08:00 AM				08:00 AM				08:00 AM				08:00 AM			
+0 mins.	129	53	29	211	52	127	66	245	8	28	16	52	32	121	19	172
+15 mins.	111	61	**45**	217	57	160	82	299	**21**	**46**	**33**	**100**	**43**	127	14	184
+30 mins.	**152**	**74**	45	**271**	55	**259**	**87**	**401**	11	35	21	67	25	**177**	**20**	**222**
+45 mins.	134	58	37	229	**62**	165	58	285	11	34	23	68	25	176	13	214
Total Volume	526	246	156	928	226	711	293	1230	51	143	93	287	125	601	66	792
% App. Total	56.7	26.5	16.8		18.4	57.8	23.8		17.8	49.8	32.4		15.8	75.9	8.3	
PHF	.865	.831	.867	.856	.911	.686	.842	.767	.607	.777	.705	.718	.727	.849	.825	.892

Counts Unlimited Inc.
PO Box 1178
Corona, CA 92878
(951) 268-6268

City of Murrieta
N/S: Hancock Avenue
E/W: Los Alamos Road
Weather: Sunny

File Name : MURHALAPM
Site Code : 10266022
Start Date : 12/1/2010
Page No : 1

Groups Printed- Total Volume

	Hancock Avenue Southbound				Los Alamos Road Westbound				Hancock Avenue Northbound				Los Alamos Road Eastbound				
Start Time	Left	Thru	Right	App. Total	Left	Thru	Right	App. Total	Left	Thru	Right	App. Total	Left	Thru	Right	App. Total	Int. Total
04:00 PM	88	42	23	153	37	113	62	212	36	92	41	169	39	197	21	257	791
04:15 PM	108	44	26	178	30	130	66	226	39	109	61	209	50	226	24	300	913
04:30 PM	101	41	35	177	35	120	78	233	34	128	69	231	48	209	17	274	915
04:45 PM	122	54	18	194	38	149	80	267	40	124	50	214	42	258	25	325	1000
Total	419	181	102	702	140	512	286	938	149	453	221	823	179	890	87	1156	3619
05:00 PM	117	58	22	197	38	133	68	239	29	122	71	222	47	242	8	297	955
05:15 PM	107	54	15	176	38	127	72	237	42	153	87	282	54	237	16	307	1002
05:30 PM	113	56	10	179	49	128	75	252	38	160	82	280	55	228	13	296	1007
05:45 PM	84	32	15	131	42	129	67	238	43	118	57	218	46	186	16	248	835
Total	421	200	62	683	167	517	282	966	152	553	297	1002	202	893	53	1148	3799
Grand Total	840	381	164	1385	307	1029	568	1904	301	1006	518	1825	381	1783	140	2304	7418
Apprch %	60.6	27.5	11.8		16.1	54	29.8		16.5	55.1	28.4		16.5	77.4	6.1		
Total %	11.3	5.1	2.2	18.7	4.1	13.9	7.7	25.7	4.1	13.6	7	24.6	5.1	24	1.9	31.1	

	Hancock Avenue Southbound				Los Alamos Road Westbound				Hancock Avenue Northbound				Los Alamos Road Eastbound				
Start Time	Left	Thru	Right	App. Total	Left	Thru	Right	App. Total	Left	Thru	Right	App. Total	Left	Thru	Right	App. Total	Int. Total
Peak Hour Analysis From 04:00 PM to 05:45 PM - Peak 1 of 1																	
Peak Hour for Entire Intersection Begins at 04:45 PM																	
04:45 PM	**122**	54	18	194	38	**149**	**80**	**267**	40	124	50	214	42	**258**	**25**	**325**	1000
05:00 PM	117	**58**	**22**	**197**	38	133	68	239	29	122	71	222	47	242	8	297	955
05:15 PM	107	54	15	176	38	127	72	237	**42**	153	**87**	**282**	54	237	16	307	1002
05:30 PM	113	56	10	179	**49**	128	75	252	38	**160**	82	280	**55**	228	13	296	**1007**
Total Volume	459	222	65	746	163	537	295	995	149	559	290	998	198	965	62	1225	3964
% App. Total	61.5	29.8	8.7		16.4	54	29.6		14.9	56	29.1		16.2	78.8	5.1		
PHF	.941	.957	.739	.947	.832	.901	.922	.932	.887	.873	.833	.885	.900	.935	.620	.942	.984

Counts Unlimited Inc.
PO Box 1178
Corona, CA 92878
(951) 268-6268

City of Murrieta
N/S: Hancock Avenue
E/W: Los Alamos Road
Weather: Sunny

File Name : MURHALAPM
Site Code : 10266022
Start Date : 12/1/2010
Page No : 2

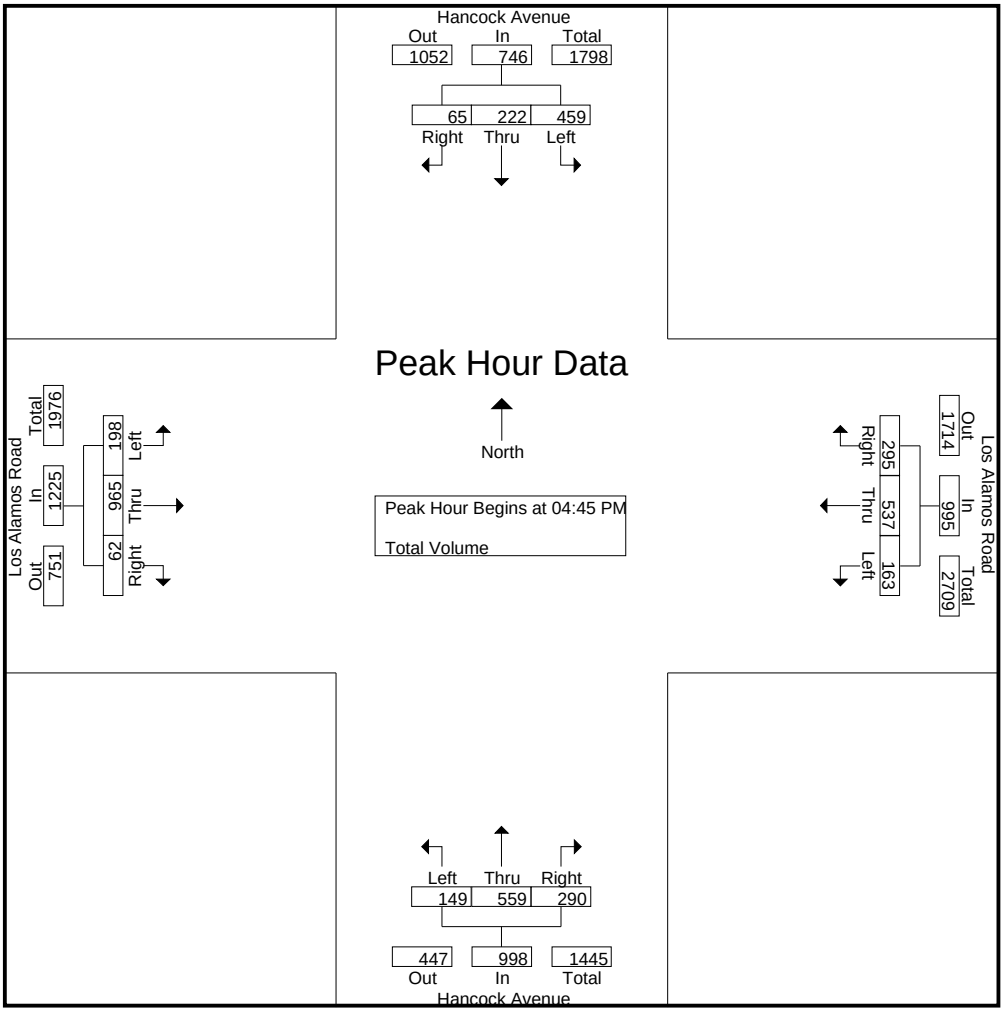

Peak Hour Analysis From 04:00 PM to 05:45 PM - Peak 1 of 1

Peak Hour for Each Approach Begins at:

	04:15 PM				04:45 PM				05:00 PM				04:45 PM			
+0 mins.	108	44	26	178	38	**149**	**80**	**267**	29	122	71	222	42	**258**	**25**	**325**
+15 mins.	101	41	**35**	177	38	133	68	239	42	153	**87**	**282**	47	242	8	297
+30 mins.	**122**	54	18	194	38	127	72	237	38	**160**	82	280	54	237	16	307
+45 mins.	117	**58**	22	**197**	**49**	128	75	252	**43**	118	57	218	**55**	228	13	296
Total Volume	448	197	101	746	163	537	295	995	152	553	297	1002	198	965	62	1225
% App. Total	60.1	26.4	13.5		16.4	54	29.6		15.2	55.2	29.6		16.2	78.8	5.1	
PHF	.918	.849	.721	.947	.832	.901	.922	.932	.884	.864	.853	.888	.900	.935	.620	.942

Counts Unlimited Inc.
PO Box 1178
Corona, CA 92878
(951) 268-6268

City of Murrieta
N/S: I-215 Southbound Ramps
E/W: Los Alamos Road
Weather: Sunny

File Name : MUR215SLAAM
Site Code : 10266021
Start Date : 12/1/2010
Page No : 1

Groups Printed- Total Volume

	I-215 Southbound Off Ramp Southbound				Los Alamos Road Westbound				I-215 Southbound On Ramp Northbound				Los Alamos Road Eastbound				
Start Time	Left	Thru	Right	App. Total	Left	Thru	Right	App. Total	Left	Thru	Right	App. Total	Left	Thru	Right	App. Total	Int. Total
07:00 AM	27	0	52	79	58	98	0	156	0	0	0	0	0	165	90	255	490
07:15 AM	21	0	90	111	43	121	0	164	0	0	0	0	0	163	114	277	552
07:30 AM	23	1	110	134	52	127	0	179	0	0	0	0	0	144	100	244	557
07:45 AM	20	0	129	149	45	158	0	203	0	0	0	0	0	181	101	282	634
Total	91	1	381	473	198	504	0	702	0	0	0	0	0	653	405	1058	2233
08:00 AM	28	0	124	152	63	184	0	247	0	0	0	0	0	188	78	266	665
08:15 AM	31	0	134	165	62	254	0	316	0	0	0	0	0	204	108	312	793
08:30 AM	20	0	123	143	66	258	0	324	0	0	0	0	0	198	132	330	797
08:45 AM	40	1	116	157	59	203	0	262	0	0	0	0	0	211	108	319	738
Total	119	1	497	617	250	899	0	1149	0	0	0	0	0	801	426	1227	2993
Grand Total	210	2	878	1090	448	1403	0	1851	0	0	0	0	0	1454	831	2285	5226
Apprch %	19.3	0.2	80.6		24.2	75.8	0		0	0	0		0	63.6	36.4		
Total %	4	0	16.8	20.9	8.6	26.8	0	35.4	0	0	0	0	0	27.8	15.9	43.7	

	I-215 Southbound Off Ramp Southbound				Los Alamos Road Westbound				I-215 Southbound On Ramp Northbound				Los Alamos Road Eastbound				
Start Time	Left	Thru	Right	App. Total	Left	Thru	Right	App. Total	Left	Thru	Right	App. Total	Left	Thru	Right	App. Total	Int. Total
Peak Hour Analysis From 07:00 AM to 08:45 AM - Peak 1 of 1																	
Peak Hour for Entire Intersection Begins at 08:00 AM																	
08:00 AM	28	0	124	152	63	184	0	247	0	0	0	0	0	188	78	266	665
08:15 AM	31	0	**134**	**165**	62	254	0	316	0	0	0	0	0	204	108	312	793
08:30 AM	20	0	123	143	**66**	**258**	0	**324**	0	0	0	0	0	198	**132**	**330**	**797**
08:45 AM	**40**	**1**	116	157	59	203	0	262	0	0	0	0	0	**211**	108	319	738
Total Volume	119	1	497	617	250	899	0	1149	0	0	0	0	0	801	426	1227	2993
% App. Total	19.3	0.2	80.6		21.8	78.2	0		0	0	0		0	65.3	34.7		
PHF	.744	.250	.927	.935	.947	.871	.000	.887	.000	.000	.000	.000	.000	.949	.807	.930	.939

Counts Unlimited Inc.
PO Box 1178
Corona, CA 92878
(951) 268-6268

City of Murrieta
N/S: I-215 Southbound Ramps
E/W: Los Alamos Road
Weather: Sunny

File Name : MUR215SLAAM
Site Code : 10266021
Start Date : 12/1/2010
Page No : 2

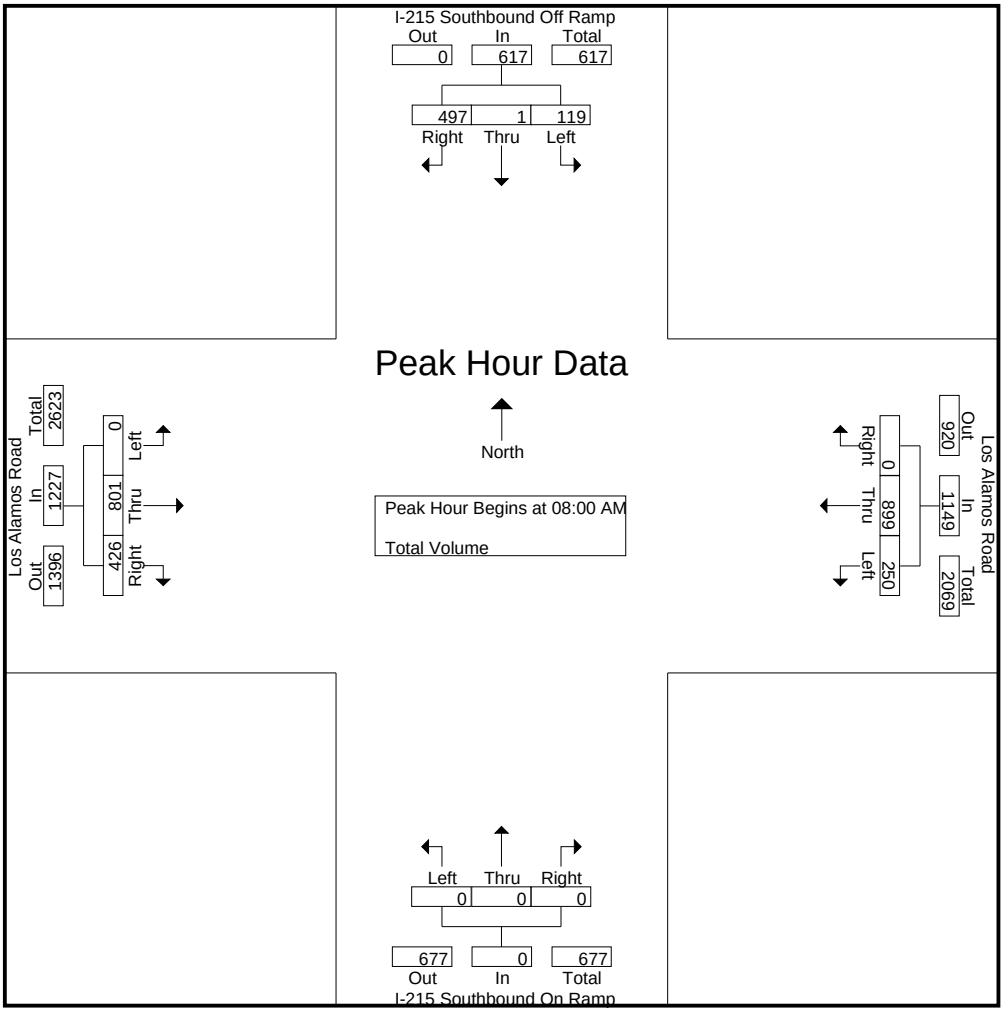

Peak Hour Analysis From 07:00 AM to 08:45 AM - Peak 1 of 1

Peak Hour for Each Approach Begins at:

	08:00 AM				08:00 AM				07:00 AM				08:00 AM			
+0 mins.	28	0	124	152	63	184	0	247	0	0	0	0	0	188	78	266
+15 mins.	31	0	**134**	**165**	62	254	0	316	0	0	0	0	0	204	108	312
+30 mins.	20	0	123	143	**66**	**258**	0	**324**	0	0	0	0	0	198	**132**	**330**
+45 mins.	**40**	**1**	116	157	59	203	0	262	0	0	0	0	0	**211**	108	319
Total Volume	119	1	497	617	250	899	0	1149	0	0	0	0	0	801	426	1227
% App. Total	19.3	0.2	80.6		21.8	78.2	0		0	0	0		0	65.3	34.7	
PHF	.744	.250	.927	.935	.947	.871	.000	.887	.000	.000	.000	.000	.000	.949	.807	.930

Counts Unlimited Inc.
PO Box 1178
Corona, CA 92878
(951) 268-6268

City of Murrieta
N/S: I-215 Southbound Ramps
E/W: Los Alamos Road
Weather: Sunny

File Name : MUR215SLAPM
Site Code : 10266021
Start Date : 12/1/2010
Page No : 1

Groups Printed- Total Volume

	I-215 Southbound Off Ramp Southbound				Los Alamos Road Westbound				I-215 Southbound On Ramp Northbound				Los Alamos Road Eastbound				
Start Time	Left	Thru	Right	App. Total	Left	Thru	Right	App. Total	Left	Thru	Right	App. Total	Left	Thru	Right	App. Total	Int. Total
04:00 PM	38	1	91	130	52	184	0	236	0	0	0	0	0	301	67	368	734
04:15 PM	45	1	93	139	49	184	0	233	0	0	0	0	0	333	68	401	773
04:30 PM	48	0	95	143	53	180	0	233	0	0	0	0	0	335	72	407	783
04:45 PM	60	1	116	177	39	188	0	227	0	0	0	0	0	336	80	416	820
Total	191	3	395	589	193	736	0	929	0	0	0	0	0	1305	287	1592	3110
05:00 PM	40	1	82	123	35	199	0	234	0	0	0	0	0	357	86	443	800
05:15 PM	50	1	96	147	41	169	0	210	0	0	0	0	0	380	48	428	785
05:30 PM	42	0	114	156	45	182	0	227	0	0	0	0	0	368	73	441	824
05:45 PM	47	1	99	147	42	157	0	199	0	0	0	0	0	317	61	378	724
Total	179	3	391	573	163	707	0	870	0	0	0	0	0	1422	268	1690	3133
Grand Total	370	6	786	1162	356	1443	0	1799	0	0	0	0	0	2727	555	3282	6243
Apprch %	31.8	0.5	67.6		19.8	80.2	0		0	0	0		0	83.1	16.9		
Total %	5.9	0.1	12.6	18.6	5.7	23.1	0	28.8	0	0	0	0	0	43.7	8.9	52.6	

	I-215 Southbound Off Ramp Southbound				Los Alamos Road Westbound				I-215 Southbound On Ramp Northbound				Los Alamos Road Eastbound				
Start Time	Left	Thru	Right	App. Total	Left	Thru	Right	App. Total	Left	Thru	Right	App. Total	Left	Thru	Right	App. Total	Int. Total
Peak Hour Analysis From 04:00 PM to 05:45 PM - Peak 1 of 1																	
Peak Hour for Entire Intersection Begins at 04:45 PM																	
04:45 PM	**60**	**1**	**116**	**177**	39	188	0	227	0	0	0	0	0	336	80	416	820
05:00 PM	40	1	82	123	35	**199**	0	**234**	0	0	0	0	0	357	**86**	**443**	800
05:15 PM	50	1	96	147	41	169	0	210	0	0	0	0	0	**380**	48	428	785
05:30 PM	42	0	114	156	**45**	182	0	227	0	0	0	0	0	368	73	441	**824**
Total Volume	192	3	408	603	160	738	0	898	0	0	0	0	0	1441	287	1728	3229
% App. Total	31.8	0.5	67.7		17.8	82.2	0		0	0	0		0	83.4	16.6		
PHF	.800	.750	.879	.852	.889	.927	.000	.959	.000	.000	.000	.000	.000	.948	.834	.975	.980

Counts Unlimited Inc.
PO Box 1178
Corona, CA 92878
(951) 268-6268

City of Murrieta
N/S: I-215 Southbound Ramps
E/W: Los Alamos Road
Weather: Sunny

File Name : MUR215SLAPM
Site Code : 10266021
Start Date : 12/1/2010
Page No : 2

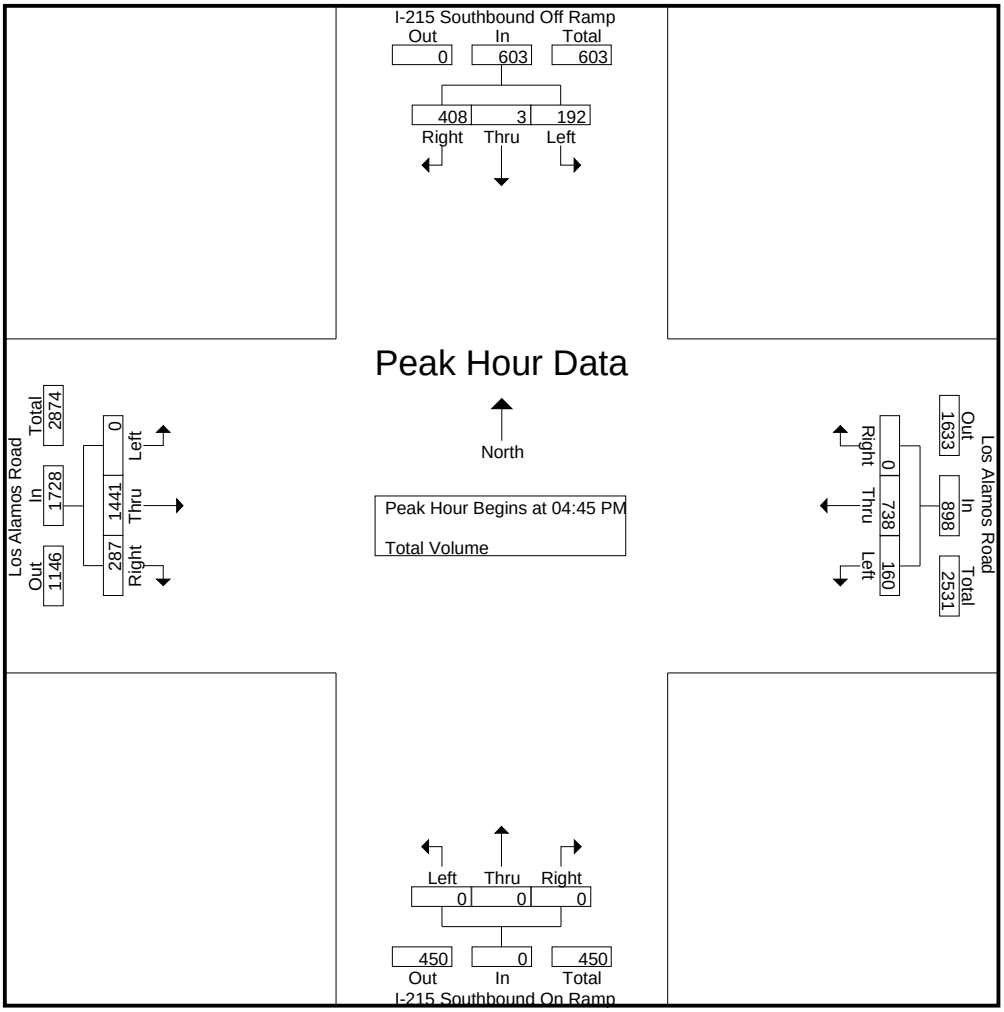

Peak Hour Analysis From 04:00 PM to 05:45 PM - Peak 1 of 1

Peak Hour for Each Approach Begins at:

	04:45 PM				04:00 PM				04:00 PM				04:45 PM			
+0 mins.	**60**	**1**	**116**	**177**	52	184	0	**236**	0	0	0	0	0	336	80	416
+15 mins.	40	1	82	123	49	184	0	233	0	0	0	0	0	357	**86**	**443**
+30 mins.	50	1	96	147	**53**	180	0	233	0	0	0	0	0	**380**	48	428
+45 mins.	42	0	114	156	39	**188**	0	227	0	0	0	0	0	368	73	441
Total Volume	192	3	408	603	193	736	0	929	0	0	0	0	0	1441	287	1728
% App. Total	31.8	0.5	67.7		20.8	79.2	0		0	0	0		0	83.4	16.6	
PHF	.800	.750	.879	.852	.910	.979	.000	.984	.000	.000	.000	.000	.000	.948	.834	.975

Counts Unlimited Inc.
PO Box 1178
Corona, CA 92878
(951) 268-6268

City of Murrieta
N/S: I-215 Northbound Ramps
E/W: Los Alamos Road
Weather: Sunny

File Name : MUR215NLAAM
Site Code : 10266044
Start Date : 12/1/2010
Page No : 1

Groups Printed- Total Volume

	I-215 Northbound On Ramp Southbound				Los Alamos Road Westbound				I-215 Northbound Off Ramp Northbound				Los Alamos Road Eastbound				
Start Time	Left	Thru	Right	App. Total	Left	Thru	Right	App. Total	Left	Thru	Right	App. Total	Left	Thru	Right	App. Total	Int. Total
07:00 AM	0	0	0	0	0	84	27	111	23	1	13	37	71	68	0	139	287
07:15 AM	0	0	0	0	0	151	28	179	26	3	18	47	77	114	0	191	417
07:30 AM	0	0	0	0	0	138	23	161	36	1	9	46	69	101	0	170	377
07:45 AM	0	0	0	0	0	166	21	187	41	0	25	66	87	118	0	205	458
Total	0	0	0	0	0	539	99	638	126	5	65	196	304	401	0	705	1539
08:00 AM	0	0	0	0	0	182	19	201	57	0	15	72	51	149	0	200	473
08:15 AM	0	0	0	0	0	272	23	295	52	1	30	83	63	198	0	261	639
08:30 AM	0	0	0	0	0	289	12	301	54	0	24	78	58	153	0	211	590
08:45 AM	0	0	0	0	0	208	18	226	46	0	38	84	70	170	0	240	550
Total	0	0	0	0	0	951	72	1023	209	1	107	317	242	670	0	912	2252
Grand Total	0	0	0	0	0	1490	171	1661	335	6	172	513	546	1071	0	1617	3791
Apprch %	0	0	0		0	89.7	10.3		65.3	1.2	33.5		33.8	66.2	0		
Total %	0	0	0	0	0	39.3	4.5	43.8	8.8	0.2	4.5	13.5	14.4	28.3	0	42.7	

	I-215 Northbound On Ramp Southbound				Los Alamos Road Westbound				I-215 Northbound Off Ramp Northbound				Los Alamos Road Eastbound				
Start Time	Left	Thru	Right	App. Total	Left	Thru	Right	App. Total	Left	Thru	Right	App. Total	Left	Thru	Right	App. Total	Int. Total
Peak Hour Analysis From 07:00 AM to 08:45 AM - Peak 1 of 1																	
Peak Hour for Entire Intersection Begins at 08:00 AM																	
08:00 AM	0	0	0	0	0	182	19	201	**57**	0	15	72	51	149	0	200	473
08:15 AM	0	0	0	0	0	272	**23**	295	52	**1**	30	83	63	**198**	0	**261**	**639**
08:30 AM	0	0	0	0	0	**289**	12	**301**	54	0	24	78	58	153	0	211	590
08:45 AM	0	0	0	0	0	208	18	226	46	0	**38**	**84**	**70**	170	0	240	550
Total Volume	0	0	0	0	0	951	72	1023	209	1	107	317	242	670	0	912	2252
% App. Total	0	0	0		0	93	7		65.9	0.3	33.8		26.5	73.5	0		
PHF	.000	.000	.000	.000	.000	.823	.783	.850	.917	.250	.704	.943	.864	.846	.000	.874	.881

Counts Unlimited Inc.
PO Box 1178
Corona, CA 92878
(951) 268-6268

City of Murrieta
N/S: I-215 Northbound Ramps
E/W: Los Alamos Road
Weather: Sunny

File Name : MUR215NLAAM
Site Code : 10266044
Start Date : 12/1/2010
Page No : 2

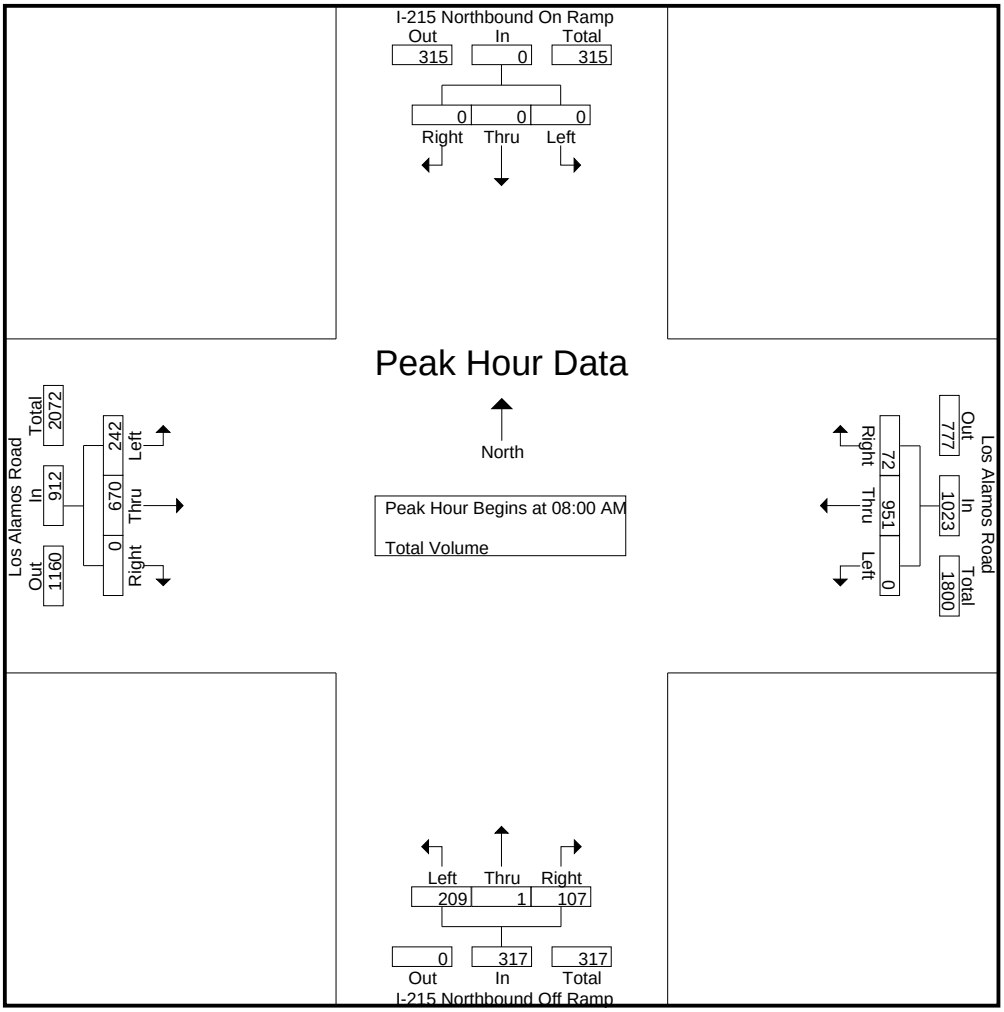

Peak Hour Analysis From 07:00 AM to 08:45 AM - Peak 1 of 1

Peak Hour for Each Approach Begins at:

	07:00 AM				08:00 AM				08:00 AM				08:00 AM			
+0 mins.	0	0	0	0	0	182	19	201	**57**	0	15	72	51	149	0	200
+15 mins.	0	0	0	0	0	272	**23**	295	52	**1**	30	83	63	**198**	0	**261**
+30 mins.	0	0	0	0	0	**289**	12	**301**	54	0	24	78	58	153	0	211
+45 mins.	0	0	0	0	0	208	18	226	46	0	**38**	**84**	**70**	170	0	240
Total Volume	0	0	0	0	0	951	72	1023	209	1	107	317	242	670	0	912
% App. Total	0	0	0		0	93	7		65.9	0.3	33.8		26.5	73.5	0	
PHF	.000	.000	.000	.000	.000	.823	.783	.850	.917	.250	.704	.943	.864	.846	.000	.874

Counts Unlimited Inc.
PO Box 1178
Corona, CA 92878
(951) 268-6268

City of Murrieta
N/S: I-215 Northbound Ramps
E/W: Los Alamos Road
Weather: Sunny

File Name : MUR215NLAPM
Site Code : 10266044
Start Date : 12/1/2010
Page No : 1

Groups Printed- Total Volume

	I-215 Northbound On Ramp Southbound				Los Alamos Road Westbound				I-215 Northbound Off Ramp Northbound				Los Alamos Road Eastbound				
Start Time	Left	Thru	Right	App. Total	Left	Thru	Right	App. Total	Left	Thru	Right	App. Total	Left	Thru	Right	App. Total	Int. Total
04:00 PM	0	0	0	0	0	164	29	193	45	2	42	89	75	259	0	334	616
04:15 PM	0	0	0	0	0	207	25	232	39	0	26	65	112	273	0	385	682
04:30 PM	0	0	0	0	0	200	65	265	23	1	52	76	99	303	0	402	743
04:45 PM	0	0	0	0	0	186	42	228	30	3	55	88	76	314	0	390	706
Total	0	0	0	0	0	757	161	918	137	6	175	318	362	1149	0	1511	2747
05:00 PM	0	0	0	0	0	181	33	214	37	0	42	79	107	291	0	398	691
05:15 PM	0	0	0	0	0	180	24	204	22	0	37	59	97	305	0	402	665
05:30 PM	0	0	0	0	0	196	15	211	21	2	47	70	87	315	0	402	683
05:45 PM	0	0	0	0	0	146	22	168	42	1	60	103	62	259	0	321	592
Total	0	0	0	0	0	703	94	797	122	3	186	311	353	1170	0	1523	2631
Grand Total	0	0	0	0	0	1460	255	1715	259	9	361	629	715	2319	0	3034	5378
Apprch %	0	0	0		0	85.1	14.9		41.2	1.4	57.4		23.6	76.4	0		
Total %	0	0	0	0	0	27.1	4.7	31.9	4.8	0.2	6.7	11.7	13.3	43.1	0	56.4	

	I-215 Northbound On Ramp Southbound				Los Alamos Road Westbound				I-215 Northbound Off Ramp Northbound				Los Alamos Road Eastbound				
Start Time	Left	Thru	Right	App. Total	Left	Thru	Right	App. Total	Left	Thru	Right	App. Total	Left	Thru	Right	App. Total	Int. Total
Peak Hour Analysis From 04:00 PM to 05:45 PM - Peak 1 of 1																	
Peak Hour for Entire Intersection Begins at 04:15 PM																	
04:15 PM	0	0	0	0	0	**207**	25	232	**39**	0	26	65	**112**	273	0	385	682
04:30 PM	0	0	0	0	0	200	**65**	**265**	23	1	52	76	99	303	0	**402**	**743**
04:45 PM	0	0	0	0	0	186	42	228	30	**3**	**55**	**88**	76	**314**	0	390	706
05:00 PM	0	0	0	0	0	181	33	214	37	0	42	79	107	291	0	398	691
Total Volume	0	0	0	0	0	774	165	939	129	4	175	308	394	1181	0	1575	2822
% App. Total	0	0	0		0	82.4	17.6		41.9	1.3	56.8		25	75	0		
PHF	.000	.000	.000	.000	.000	.935	.635	.886	.827	.333	.795	.875	.879	.940	.000	.979	.950

Counts Unlimited Inc.
PO Box 1178
Corona, CA 92878
(951) 268-6268

City of Murrieta
N/S: I-215 Northbound Ramps
E/W: Los Alamos Road
Weather: Sunny

File Name : MUR215NLAPM
Site Code : 10266044
Start Date : 12/1/2010
Page No : 2

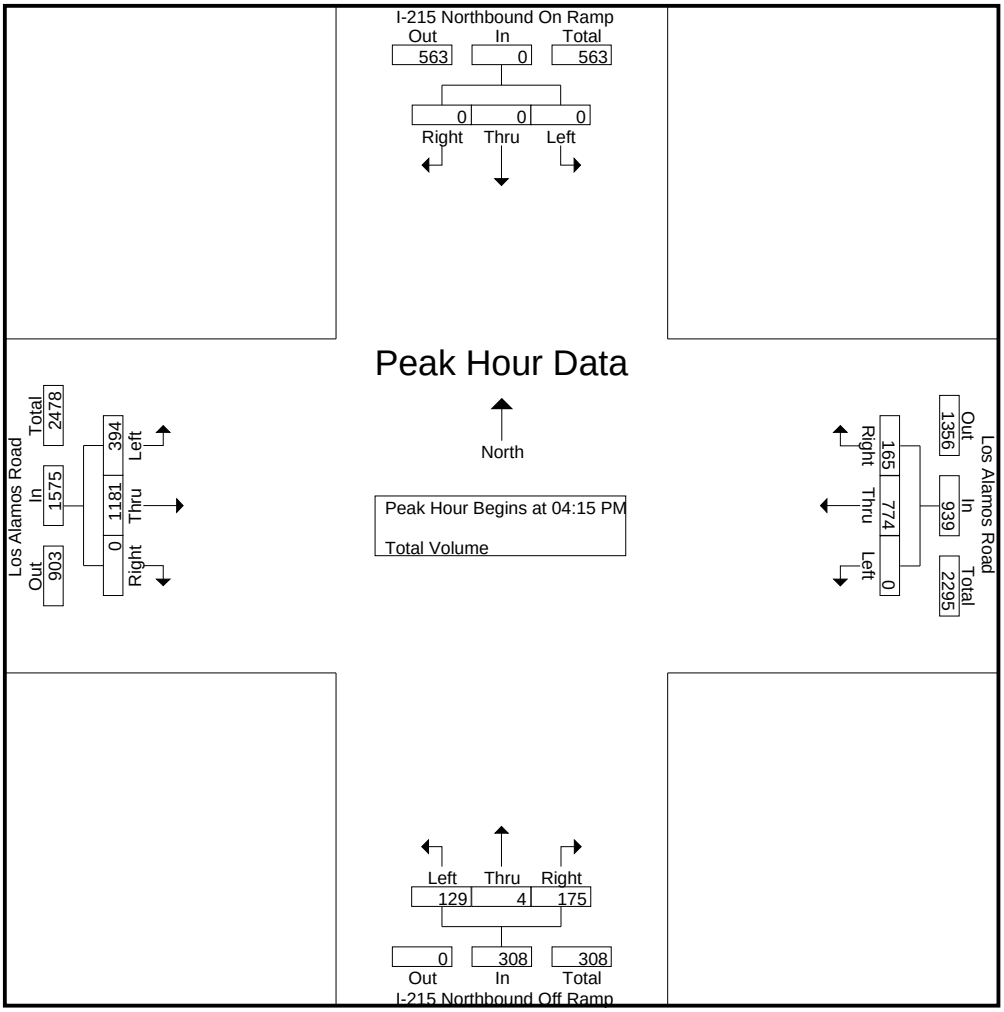

Peak Hour Analysis From 04:00 PM to 05:45 PM - Peak 1 of 1

Peak Hour for Each Approach Begins at:

	04:00 PM				04:15 PM				04:00 PM				04:30 PM			
+0 mins.	0	0	0	0	0	**207**	25	232	**45**	2	42	**89**	99	303	0	**402**
+15 mins.	0	0	0	0	0	200	**65**	**265**	39	0	26	65	76	**314**	0	390
+30 mins.	0	0	0	0	0	186	42	228	23	1	52	76	**107**	291	0	398
+45 mins.	0	0	0	0	0	181	33	214	30	**3**	**55**	88	97	305	0	402
Total Volume	0	0	0	0	0	774	165	939	137	6	175	318	379	1213	0	1592
% App. Total	0	0	0		0	82.4	17.6		43.1	1.9	55		23.8	76.2	0	
PHF	.000	.000	.000	.000	.000	.935	.635	.886	.761	.500	.795	.893	.886	.966	.000	.990

Counts Unlimited Inc.
PO Box 1178
Corona, CA 92878
(951) 268-6268

City of Murrieta
N/S: Whitewood Road
E/W: Los Alamos Road
Weather: Sunny

File Name : MURWHLAAM
Site Code : 10266027
Start Date : 12/1/2010
Page No : 1

Groups Printed- Total Volume

	Whitewood Road Southbound				Los Alamos Road Westbound				Whitewood Road Northbound				Los Alamos Road Eastbound				
Start Time	Left	Thru	Right	App. Total	Left	Thru	Right	App. Total	Left	Thru	Right	App. Total	Left	Thru	Right	App. Total	Int. Total
07:00 AM	2	3	29	34	15	37	4	56	29	11	3	43	16	35	13	64	197
07:15 AM	1	16	55	72	4	59	0	63	36	20	10	66	45	38	7	90	291
07:30 AM	3	21	45	69	7	75	2	84	28	24	8	60	20	33	18	71	284
07:45 AM	5	28	63	96	5	45	1	51	35	23	19	77	34	57	21	112	336
Total	11	68	192	271	31	216	7	254	128	78	40	246	115	163	59	337	1108
08:00 AM	2	45	91	138	17	91	3	111	27	23	22	72	25	98	18	141	462
08:15 AM	4	31	101	136	36	152	4	192	47	37	16	100	26	143	16	185	613
08:30 AM	1	44	74	119	41	140	3	184	55	32	15	102	38	45	32	115	520
08:45 AM	2	43	50	95	13	86	0	99	61	45	8	114	53	45	42	140	448
Total	9	163	316	488	107	469	10	586	190	137	61	388	142	331	108	581	2043
Grand Total	20	231	508	759	138	685	17	840	318	215	101	634	257	494	167	918	3151
Apprch %	2.6	30.4	66.9		16.4	81.5	2		50.2	33.9	15.9		28	53.8	18.2		
Total %	0.6	7.3	16.1	24.1	4.4	21.7	0.5	26.7	10.1	6.8	3.2	20.1	8.2	15.7	5.3	29.1	

	Whitewood Road Southbound				Los Alamos Road Westbound				Whitewood Road Northbound				Los Alamos Road Eastbound				
Start Time	Left	Thru	Right	App. Total	Left	Thru	Right	App. Total	Left	Thru	Right	App. Total	Left	Thru	Right	App. Total	Int. Total
Peak Hour Analysis From 07:00 AM to 08:00 AM - Peak 1 of 1																	
Peak Hour for Entire Intersection Begins at 07:15 AM																	
07:15 AM	1	16	55	72	4	59	0	63	**36**	20	10	66	**45**	38	7	90	291
07:30 AM	3	21	45	69	7	75	2	84	28	**24**	8	60	20	33	18	71	284
07:45 AM	**5**	28	63	96	5	45	1	51	35	23	19	**77**	34	57	**21**	112	336
08:00 AM	2	**45**	**91**	**138**	**17**	**91**	**3**	**111**	27	23	**22**	72	25	**98**	18	**141**	**462**
Total Volume	11	110	254	375	33	270	6	309	126	90	59	275	124	226	64	414	1373
% App. Total	2.9	29.3	67.7		10.7	87.4	1.9		45.8	32.7	21.5		30	54.6	15.5		
PHF	.550	.611	.698	.679	.485	.742	.500	.696	.875	.938	.670	.893	.689	.577	.762	.734	.743

Counts Unlimited Inc.
PO Box 1178
Corona, CA 92878
(951) 268-6268

City of Murrieta
N/S: Whitewood Road
E/W: Los Alamos Road
Weather: Sunny

File Name : MURWHLAAM
Site Code : 10266027
Start Date : 12/1/2010
Page No : 2

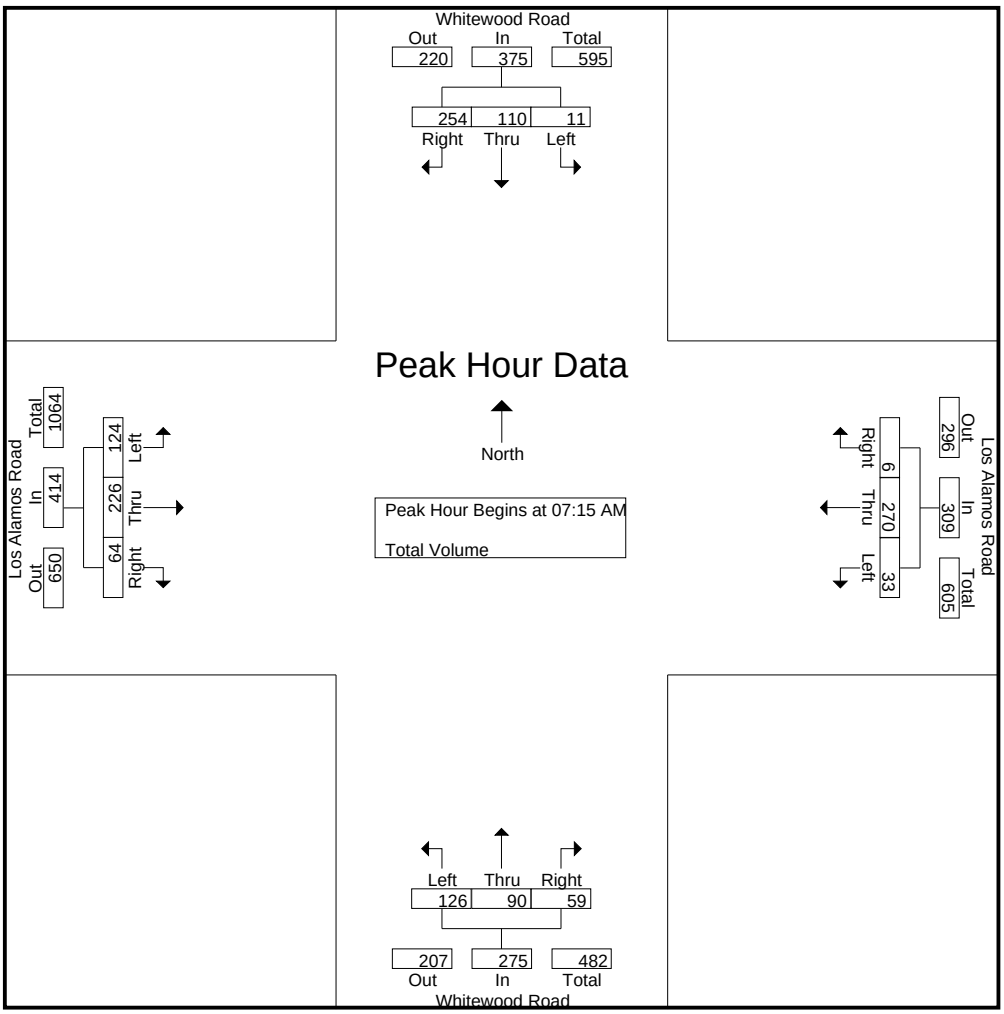

Peak Hour Analysis From 07:00 AM to 08:00 AM - Peak 1 of 1

Peak Hour for Each Approach Begins at:

	07:15 AM				07:15 AM				07:15 AM				07:15 AM			
+0 mins.	1	16	55	72	4	59	0	63	**36**	20	10	66	**45**	38	7	90
+15 mins.	3	21	45	69	7	75	2	84	28	**24**	8	60	20	33	18	71
+30 mins.	**5**	28	63	96	5	45	1	51	35	23	19	**77**	34	57	**21**	112
+45 mins.	2	**45**	**91**	**138**	**17**	**91**	**3**	**111**	27	23	**22**	72	25	**98**	18	**141**
Total Volume	11	110	254	375	33	270	6	309	126	90	59	275	124	226	64	414
% App. Total	2.9	29.3	67.7		10.7	87.4	1.9		45.8	32.7	21.5		30	54.6	15.5	
PHF	.550	.611	.698	.679	.485	.742	.500	.696	.875	.938	.670	.893	.689	.577	.762	.734

Counts Unlimited Inc.
PO Box 1178
Corona, CA 92878
(951) 268-6268

City of Murrieta
N/S: Whitewood Road
E/W: Los Alamos Road
Weather: Sunny

File Name : MURWHLAPM
Site Code : 10266027
Start Date : 12/1/2010
Page No : 1

Groups Printed- Total Volume

	Whitewood Road Southbound				Los Alamos Road Westbound				Whitewood Road Northbound				Los Alamos Road Eastbound				
Start Time	Left	Thru	Right	App. Total	Left	Thru	Right	App. Total	Left	Thru	Right	App. Total	Left	Thru	Right	App. Total	Int. Total
04:00 PM	5	44	32	81	11	49	1	61	40	72	5	117	57	67	55	179	438
04:15 PM	4	57	33	94	17	53	5	75	44	63	6	113	62	86	62	210	492
04:30 PM	2	48	50	100	12	52	3	67	50	75	14	139	71	80	59	210	516
04:45 PM	5	54	40	99	17	55	5	77	48	102	20	170	73	97	73	243	589
Total	16	203	155	374	57	209	14	280	182	312	45	539	263	330	249	842	2035
05:00 PM	2	37	39	78	24	47	5	76	55	103	24	182	63	90	71	224	560
05:15 PM	2	45	48	95	21	58	4	83	52	94	23	169	81	95	68	244	591
05:30 PM	1	52	49	102	19	60	3	82	42	91	21	154	101	109	41	251	589
05:45 PM	5	40	26	71	18	50	4	72	48	93	17	158	97	97	50	244	545
Total	10	174	162	346	82	215	16	313	197	381	85	663	342	391	230	963	2285
Grand Total	26	377	317	720	139	424	30	593	379	693	130	1202	605	721	479	1805	4320
Apprch %	3.6	52.4	44		23.4	71.5	5.1		31.5	57.7	10.8		33.5	39.9	26.5		
Total %	0.6	8.7	7.3	16.7	3.2	9.8	0.7	13.7	8.8	16	3	27.8	14	16.7	11.1	41.8	

	Whitewood Road Southbound				Los Alamos Road Westbound				Whitewood Road Northbound				Los Alamos Road Eastbound				
Start Time	Left	Thru	Right	App. Total	Left	Thru	Right	App. Total	Left	Thru	Right	App. Total	Left	Thru	Right	App. Total	Int. Total
Peak Hour Analysis From 04:00 PM to 05:00 PM - Peak 1 of 1																	
Peak Hour for Entire Intersection Begins at 04:15 PM																	
04:15 PM	4	**57**	33	94	17	53	**5**	75	44	63	6	113	62	86	62	210	492
04:30 PM	2	48	**50**	**100**	12	52	3	67	50	75	14	139	71	80	59	210	516
04:45 PM	**5**	54	40	99	17	**55**	5	**77**	48	102	20	170	**73**	**97**	**73**	**243**	**589**
05:00 PM	2	37	39	78	**24**	47	5	76	**55**	**103**	**24**	**182**	63	90	71	224	560
Total Volume	13	196	162	371	70	207	18	295	197	343	64	604	269	353	265	887	2157
% App. Total	3.5	52.8	43.7		23.7	70.2	6.1		32.6	56.8	10.6		30.3	39.8	29.9		
PHF	.650	.860	.810	.928	.729	.941	.900	.958	.895	.833	.667	.830	.921	.910	.908	.913	.916

Counts Unlimited Inc.
PO Box 1178
Corona, CA 92878
(951) 268-6268

City of Murrieta
N/S: Whitewood Road
E/W: Los Alamos Road
Weather: Sunny

File Name : MURWHLAPM
Site Code : 10266027
Start Date : 12/1/2010
Page No : 2

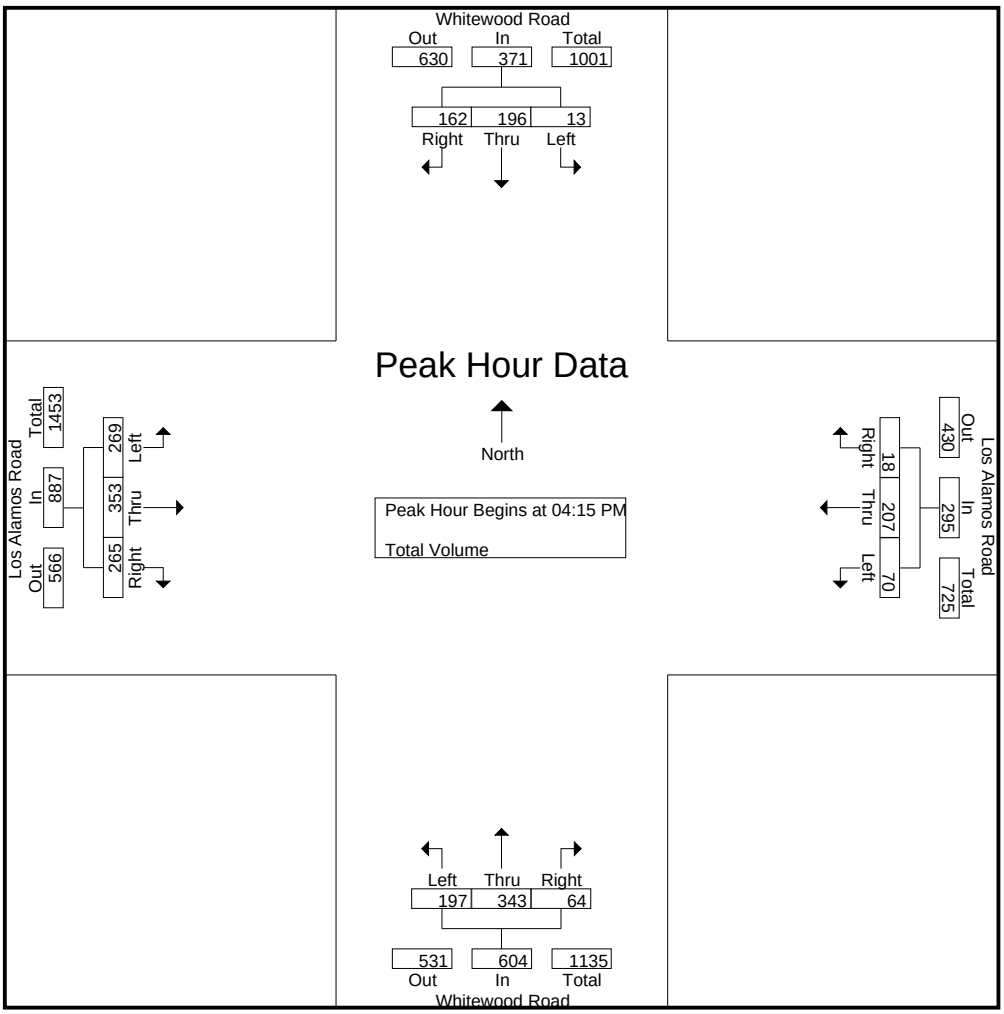

Peak Hour Analysis From 04:00 PM to 05:00 PM - Peak 1 of 1

Peak Hour for Each Approach Begins at:

	04:00 PM				04:15 PM				04:15 PM				04:15 PM			
+0 mins.	**5**	44	32	81	17	53	**5**	75	44	63	6	113	62	86	62	210
+15 mins.	4	**57**	33	94	12	52	3	67	50	75	14	139	71	80	59	210
+30 mins.	2	48	**50**	**100**	17	**55**	5	**77**	48	102	20	170	**73**	**97**	**73**	**243**
+45 mins.	5	54	40	99	**24**	47	5	76	**55**	**103**	**24**	**182**	63	90	71	224
Total Volume	16	203	155	374	70	207	18	295	197	343	64	604	269	353	265	887
% App. Total	4.3	54.3	41.4		23.7	70.2	6.1		32.6	56.8	10.6		30.3	39.8	29.9	
PHF	.800	.890	.775	.935	.729	.941	.900	.958	.895	.833	.667	.830	.921	.910	.908	.913

Counts Unlimited Inc.
PO Box 1178
Corona, CA 92878
(951) 268-6268

City of Murrieta
N/S: Whitewood Road
E/W: Murrieta Hot Springs Road
Weather: Sunny

File Name : MURWHMHSAM
Site Code : 10266156
Start Date : 12/1/2010
Page No : 1

Groups Printed- Total Volume

	Whitewood Road Southbound				Murrieta Hot Springs Westbound				Whitewood Road Northbound				Murrieta Hot Springs Eastbound				
Start Time	Left	Thru	Right	App. Total	Left	Thru	Right	App. Total	Left	Thru	Right	App. Total	Left	Thru	Right	App. Total	Int. Total
07:00 AM	34	2	6	42	0	332	28	360	4	1	5	10	4	165	2	171	583
07:15 AM	35	1	17	53	1	369	34	404	3	0	2	5	8	194	1	203	665
07:30 AM	46	1	24	71	2	381	32	415	1	1	4	6	5	215	2	222	714
07:45 AM	58	0	35	93	2	333	37	372	0	3	6	9	19	282	0	301	775
Total	173	4	82	259	5	1415	131	1551	8	5	17	30	36	856	5	897	2737
08:00 AM	76	1	12	89	4	358	27	389	2	12	10	24	5	275	0	280	782
08:15 AM	97	10	20	127	2	362	58	422	0	11	14	25	8	270	2	280	854
08:30 AM	94	5	15	114	10	399	80	489	1	15	10	26	7	270	2	279	908
08:45 AM	86	4	16	106	7	437	76	520	1	0	9	10	11	291	0	302	938
Total	353	20	63	436	23	1556	241	1820	4	38	43	85	31	1106	4	1141	3482
Grand Total	526	24	145	695	28	2971	372	3371	12	43	60	115	67	1962	9	2038	6219
Apprch %	75.7	3.5	20.9		0.8	88.1	11		10.4	37.4	52.2		3.3	96.3	0.4		
Total %	8.5	0.4	2.3	11.2	0.5	47.8	6	54.2	0.2	0.7	1	1.8	1.1	31.5	0.1	32.8	

	Whitewood Road Southbound				Murrieta Hot Springs Westbound				Whitewood Road Northbound				Murrieta Hot Springs Eastbound				
Start Time	Left	Thru	Right	App. Total	Left	Thru	Right	App. Total	Left	Thru	Right	App. Total	Left	Thru	Right	App. Total	Int. Total
Peak Hour Analysis From 07:00 AM to 08:45 AM - Peak 1 of 1																	
Peak Hour for Entire Intersection Begins at 08:00 AM																	
08:00 AM	76	1	12	89	4	358	27	389	**2**	12	10	24	5	275	0	280	782
08:15 AM	**97**	**10**	**20**	**127**	2	362	58	422	0	11	**14**	25	8	270	**2**	280	854
08:30 AM	94	5	15	114	**10**	399	**80**	489	1	**15**	10	**26**	7	270	2	279	908
08:45 AM	86	4	16	106	7	**437**	76	**520**	1	0	9	10	**11**	**291**	0	**302**	**938**
Total Volume	353	20	63	436	23	1556	241	1820	4	38	43	85	31	1106	4	1141	3482
% App. Total	81	4.6	14.4		1.3	85.5	13.2		4.7	44.7	50.6		2.7	96.9	0.4		
PHF	.910	.500	.788	.858	.575	.890	.753	.875	.500	.633	.768	.817	.705	.950	.500	.945	.928

Counts Unlimited Inc.
PO Box 1178
Corona, CA 92878
(951) 268-6268

City of Murrieta
N/S: Whitewood Road
E/W: Murrieta Hot Springs Road
Weather: Sunny

File Name : MURWHMHSAM
Site Code : 10266156
Start Date : 12/1/2010
Page No : 2

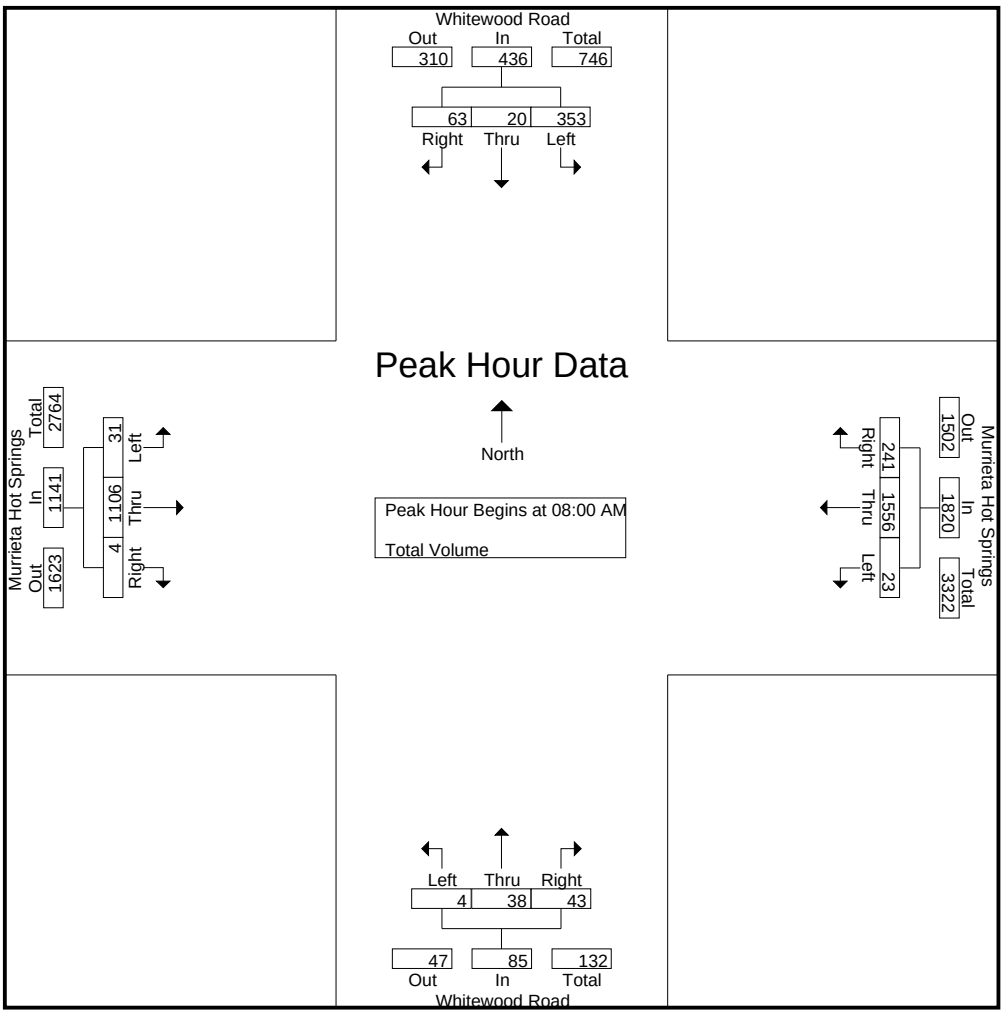

Peak Hour Analysis From 07:00 AM to 08:45 AM - Peak 1 of 1

Peak Hour for Each Approach Begins at:

	08:00 AM				08:00 AM				08:00 AM				08:00 AM			
+0 mins.	76	1	12	89	4	358	27	389	**2**	12	10	24	5	275	0	280
+15 mins.	**97**	**10**	**20**	**127**	2	362	58	422	0	11	**14**	25	8	270	**2**	280
+30 mins.	94	5	15	114	**10**	399	**80**	489	1	**15**	10	**26**	7	270	2	279
+45 mins.	86	4	16	106	7	**437**	76	**520**	1	0	9	10	**11**	**291**	0	**302**
Total Volume	353	20	63	436	23	1556	241	1820	4	38	43	85	31	1106	4	1141
% App. Total	81	4.6	14.4		1.3	85.5	13.2		4.7	44.7	50.6		2.7	96.9	0.4	
PHF	.910	.500	.788	.858	.575	.890	.753	.875	.500	.633	.768	.817	.705	.950	.500	.945

Counts Unlimited Inc.
PO Box 1178
Corona, CA 92878
(951) 268-6268

City of Murrieta
N/S: Whitewood Road
E/W: Murrieta Hot Springs Road
Weather: Sunny

File Name : MURWHMHSPM
Site Code : 10266156
Start Date : 12/1/2010
Page No : 1

Groups Printed- Total Volume

	Whitewood Road Southbound				Murrieta Hot Springs Westbound				Whitewood Road Northbound				Murrieta Hot Springs Eastbound				
Start Time	Left	Thru	Right	App. Total	Left	Thru	Right	App. Total	Left	Thru	Right	App. Total	Left	Thru	Right	App. Total	Int. Total
04:00 PM	73	1	18	92	11	418	90	519	1	1	9	11	22	348	2	372	994
04:15 PM	90	2	20	112	5	418	85	508	1	2	5	8	22	441	2	465	1093
04:30 PM	65	4	20	89	5	443	88	536	1	1	2	4	19	492	2	513	1142
04:45 PM	92	1	29	122	5	471	94	570	2	1	3	6	27	481	1	509	1207
Total	320	8	87	415	26	1750	357	2133	5	5	19	29	90	1762	7	1859	4436
05:00 PM	79	1	17	97	8	440	116	564	0	3	4	7	27	441	2	470	1138
05:15 PM	80	1	27	108	3	422	119	544	3	0	7	10	28	489	1	518	1180
05:30 PM	78	3	16	97	6	405	92	503	4	2	1	7	29	477	4	510	1117
05:45 PM	68	2	25	95	6	387	95	488	1	0	4	5	27	469	1	497	1085
Total	305	7	85	397	23	1654	422	2099	8	5	16	29	111	1876	8	1995	4520
Grand Total	625	15	172	812	49	3404	779	4232	13	10	35	58	201	3638	15	3854	8956
Apprch %	77	1.8	21.2		1.2	80.4	18.4		22.4	17.2	60.3		5.2	94.4	0.4		
Total %	7	0.2	1.9	9.1	0.5	38	8.7	47.3	0.1	0.1	0.4	0.6	2.2	40.6	0.2	43	

	Whitewood Road Southbound				Murrieta Hot Springs Westbound				Whitewood Road Northbound				Murrieta Hot Springs Eastbound				
Start Time	Left	Thru	Right	App. Total	Left	Thru	Right	App. Total	Left	Thru	Right	App. Total	Left	Thru	Right	App. Total	Int. Total
Peak Hour Analysis From 04:00 PM to 05:45 PM - Peak 1 of 1																	
Peak Hour for Entire Intersection Begins at 04:30 PM																	
04:30 PM	65	**4**	20	89	5	443	88	536	1	1	2	4	19	**492**	**2**	513	1142
04:45 PM	**92**	1	**29**	**122**	5	**471**	94	**570**	2	1	3	6	27	481	1	509	**1207**
05:00 PM	79	1	17	97	**8**	440	116	564	0	**3**	4	7	27	441	2	470	1138
05:15 PM	80	1	27	108	3	422	**119**	544	**3**	0	**7**	**10**	**28**	489	1	**518**	1180
Total Volume	316	7	93	416	21	1776	417	2214	6	5	16	27	101	1903	6	2010	4667
% App. Total	76	1.7	22.4		0.9	80.2	18.8		22.2	18.5	59.3		5	94.7	0.3		
PHF	.859	.438	.802	.852	.656	.943	.876	.971	.500	.417	.571	.675	.902	.967	.750	.970	.967

Counts Unlimited Inc.
PO Box 1178
Corona, CA 92878
(951) 268-6268

City of Murrieta
N/S: Whitewood Road
E/W: Murrieta Hot Springs Road
Weather: Sunny

File Name : MURWHMHSPM
Site Code : 10266156
Start Date : 12/1/2010
Page No : 2

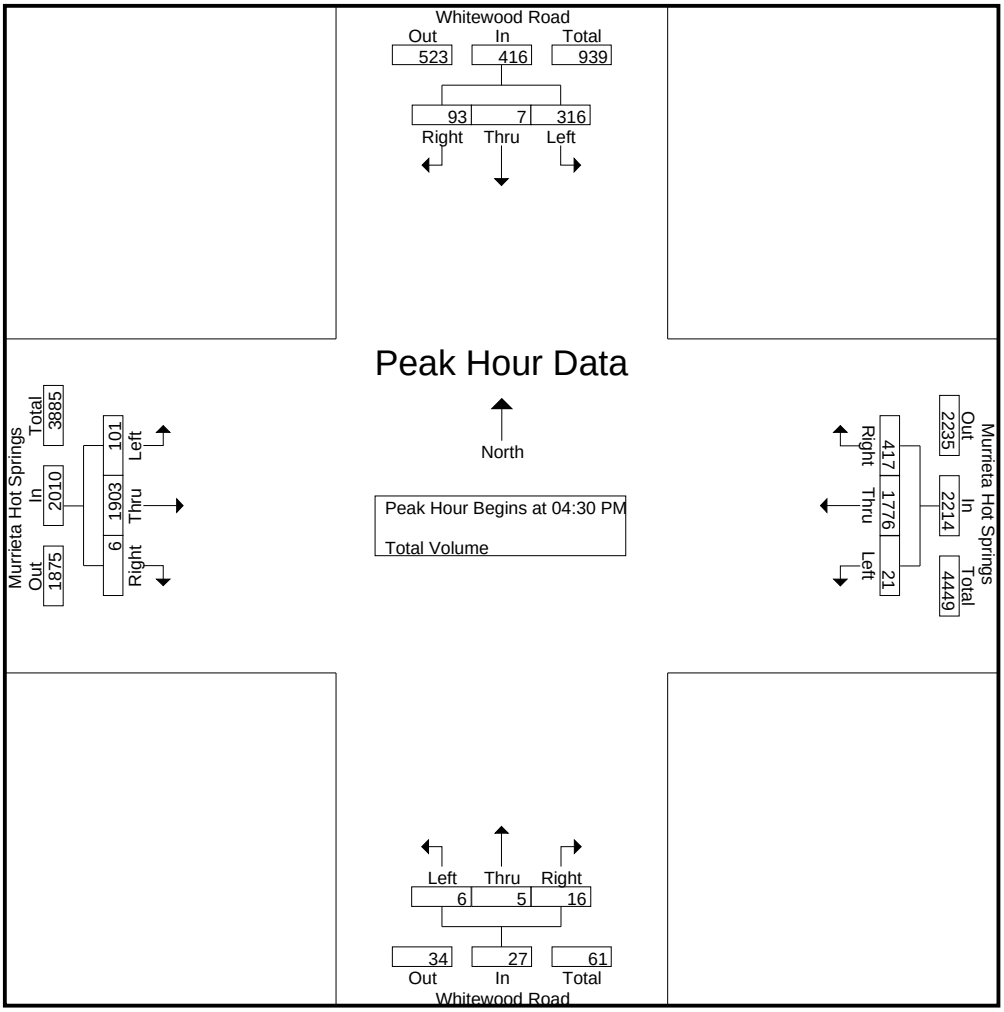

Peak Hour Analysis From 04:00 PM to 05:45 PM - Peak 1 of 1

Peak Hour for Each Approach Begins at:

	04:45 PM				04:30 PM				04:45 PM				04:30 PM			
+0 mins.	**92**	1	**29**	**122**	5	443	88	536	2	1	3	6	19	**492**	**2**	513
+15 mins.	79	1	17	97	5	**471**	94	**570**	0	**3**	4	7	27	481	1	509
+30 mins.	80	1	27	108	**8**	440	116	564	3	0	**7**	**10**	27	441	2	470
+45 mins.	78	**3**	16	97	3	422	**119**	544	**4**	2	1	7	**28**	489	1	**518**
Total Volume	329	6	89	424	21	1776	417	2214	9	6	15	30	101	1903	6	2010
% App. Total	77.6	1.4	21		0.9	80.2	18.8		30	20	50		5	94.7	0.3	
PHF	.894	.500	.767	.869	.656	.943	.876	.971	.563	.500	.536	.750	.902	.967	.750	.970

Counts Unlimited Inc.
PO Box 1178
Corona, CA 92878
(951) 268-6268

City of Murrieta
N/S: Adams Avenue
E/W: Guava Street
Weather: Sunny

File Name : MURADGUAM
Site Code : 10266050
Start Date : 11/30/2010
Page No : 1

Groups Printed- Total Volume

	Adams Avenue Southbound			Guava Street Westbound			Adams Avenue Northbound			
Start Time	Left	Thru	App. Total	Left	Right	App. Total	Thru	Right	App. Total	Int. Total
07:00 AM	9	3	12	0	2	2	2	0	2	16
07:15 AM	15	9	24	0	10	10	2	0	2	36
07:30 AM	20	15	35	0	8	8	1	0	1	44
07:45 AM	22	25	47	0	19	19	2	1	3	69
Total	66	52	118	0	39	39	7	1	8	165
08:00 AM	17	8	25	1	9	10	3	1	4	39
08:15 AM	28	15	43	1	11	12	5	0	5	60
08:30 AM	27	19	46	1	5	6	3	0	3	55
08:45 AM	13	10	23	2	11	13	8	1	9	45
Total	85	52	137	5	36	41	19	2	21	199
Grand Total	151	104	255	5	75	80	26	3	29	364
Apprch %	59.2	40.8		6.2	93.8		89.7	10.3		
Total %	41.5	28.6	70.1	1.4	20.6	22	7.1	0.8	8	

	Adams Avenue Southbound			Guava Street Westbound			Adams Avenue Northbound			
Start Time	Left	Thru	App. Total	Left	Right	App. Total	Thru	Right	App. Total	Int. Total
Peak Hour Analysis From 07:00 AM to 08:45 AM - Peak 1 of 1										
Peak Hour for Entire Intersection Begins at 07:45 AM										
07:45 AM	22	**25**	**47**	0	**19**	**19**	2	**1**	3	**69**
08:00 AM	17	8	25	**1**	9	10	3	1	4	39
08:15 AM	**28**	15	43	1	11	12	**5**	0	**5**	60
08:30 AM	27	19	46	1	5	6	3	0	3	55
Total Volume	94	67	161	3	44	47	13	2	15	223
% App. Total	58.4	41.6		6.4	93.6		86.7	13.3		
PHF	.839	.670	.856	.750	.579	.618	.650	.500	.750	.808

Counts Unlimited Inc.
PO Box 1178
Corona, CA 92878
(951) 268-6268

City of Murrieta
N/S: Adams Avenue
E/W: Guava Street
Weather: Sunny

File Name : MURADGUAM
Site Code : 10266050
Start Date : 11/30/2010
Page No : 2

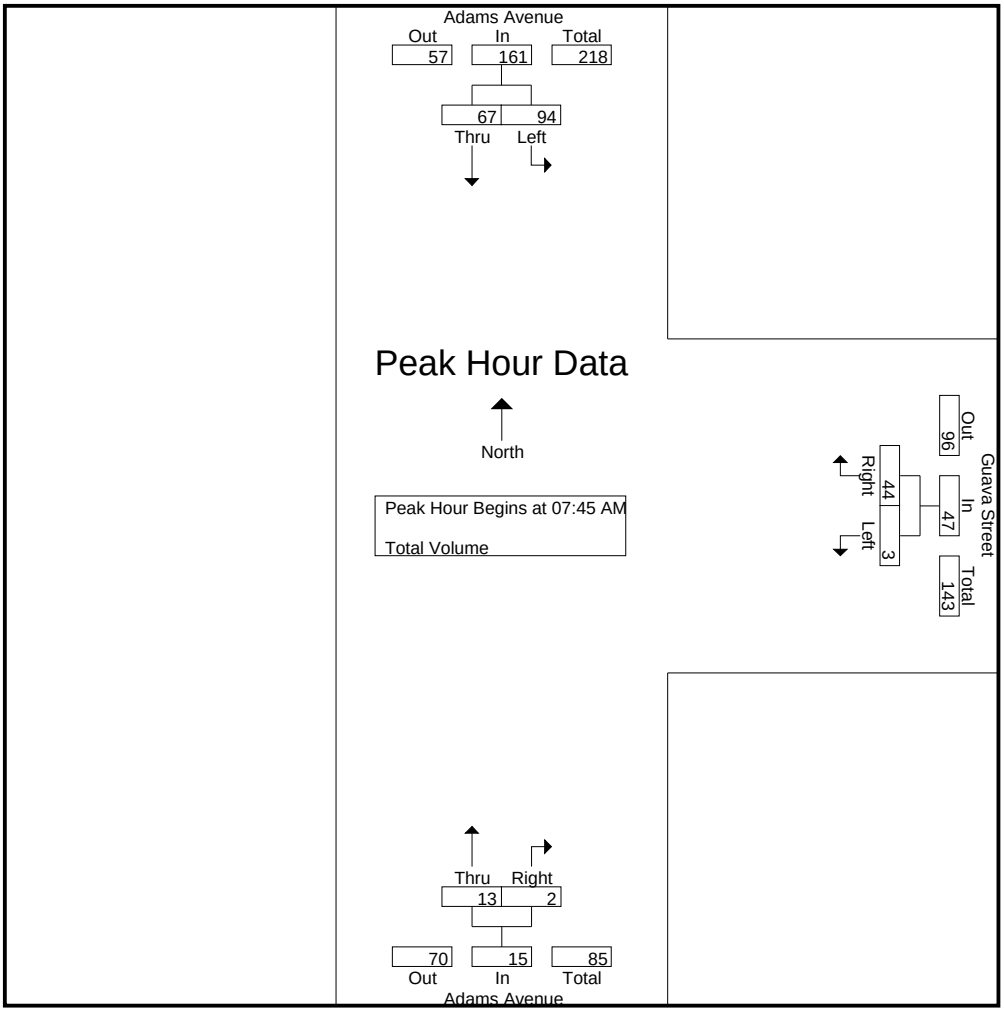

Peak Hour Analysis From 07:00 AM to 08:45 AM - Peak 1 of 1

Peak Hour for Each Approach Begins at:

	07:45 AM			07:30 AM			08:00 AM		
+0 mins.	22	**25**	**47**	0	8	8	3	**1**	4
+15 mins.	17	8	25	0	**19**	**19**	5	0	5
+30 mins.	**28**	15	43	**1**	9	10	3	0	3
+45 mins.	27	19	46	1	11	12	**8**	1	**9**
Total Volume	94	67	161	2	47	49	19	2	21
% App. Total	58.4	41.6		4.1	95.9		90.5	9.5	
PHF	.839	.670	.856	.500	.618	.645	.594	.500	.583

Counts Unlimited Inc.
PO Box 1178
Corona, CA 92878
(951) 268-6268

City of Murrieta
N/S: Adams Avenue
E/W: Guava Street
Weather: Sunny

File Name : MURADGUPM
Site Code : 10266050
Start Date : 11/30/2010
Page No : 1

Groups Printed- Total Volume

	Adams Avenue Southbound			Guava Street Westbound			Adams Avenue Northbound			
Start Time	Left	Thru	App. Total	Left	Right	App. Total	Thru	Right	App. Total	Int. Total
04:00 PM	15	15	30	5	13	18	20	9	29	77
04:15 PM	16	7	23	3	22	25	19	7	26	74
04:30 PM	24	5	29	0	25	25	29	6	35	89
04:45 PM	17	6	23	3	17	20	15	7	22	65
Total	72	33	105	11	77	88	83	29	112	305
05:00 PM	20	4	24	1	26	27	23	6	29	80
05:15 PM	12	4	16	4	21	25	21	2	23	64
05:30 PM	9	12	21	6	21	27	19	7	26	74
05:45 PM	12	6	18	6	16	22	16	12	28	68
Total	53	26	79	17	84	101	79	27	106	286
Grand Total	125	59	184	28	161	189	162	56	218	591
Apprch %	67.9	32.1		14.8	85.2		74.3	25.7		
Total %	21.2	10	31.1	4.7	27.2	32	27.4	9.5	36.9	

	Adams Avenue Southbound			Guava Street Westbound			Adams Avenue Northbound			
Start Time	Left	Thru	App. Total	Left	Right	App. Total	Thru	Right	App. Total	Int. Total
Peak Hour Analysis From 04:00 PM to 05:45 PM - Peak 1 of 1										
Peak Hour for Entire Intersection Begins at 04:15 PM										
04:15 PM	16	**7**	23	**3**	22	25	19	**7**	26	74
04:30 PM	**24**	5	**29**	0	25	25	**29**	6	**35**	**89**
04:45 PM	17	6	23	3	17	20	15	7	22	65
05:00 PM	20	4	24	1	**26**	**27**	23	6	29	80
Total Volume	77	22	99	7	90	97	86	26	112	308
% App. Total	77.8	22.2		7.2	92.8		76.8	23.2		
PHF	.802	.786	.853	.583	.865	.898	.741	.929	.800	.865

Counts Unlimited Inc.
PO Box 1178
Corona, CA 92878
(951) 268-6268

City of Murrieta
N/S: Adams Avenue
E/W: Guava Street
Weather: Sunny

File Name : MURADGUPM
Site Code : 10266050
Start Date : 11/30/2010
Page No : 2

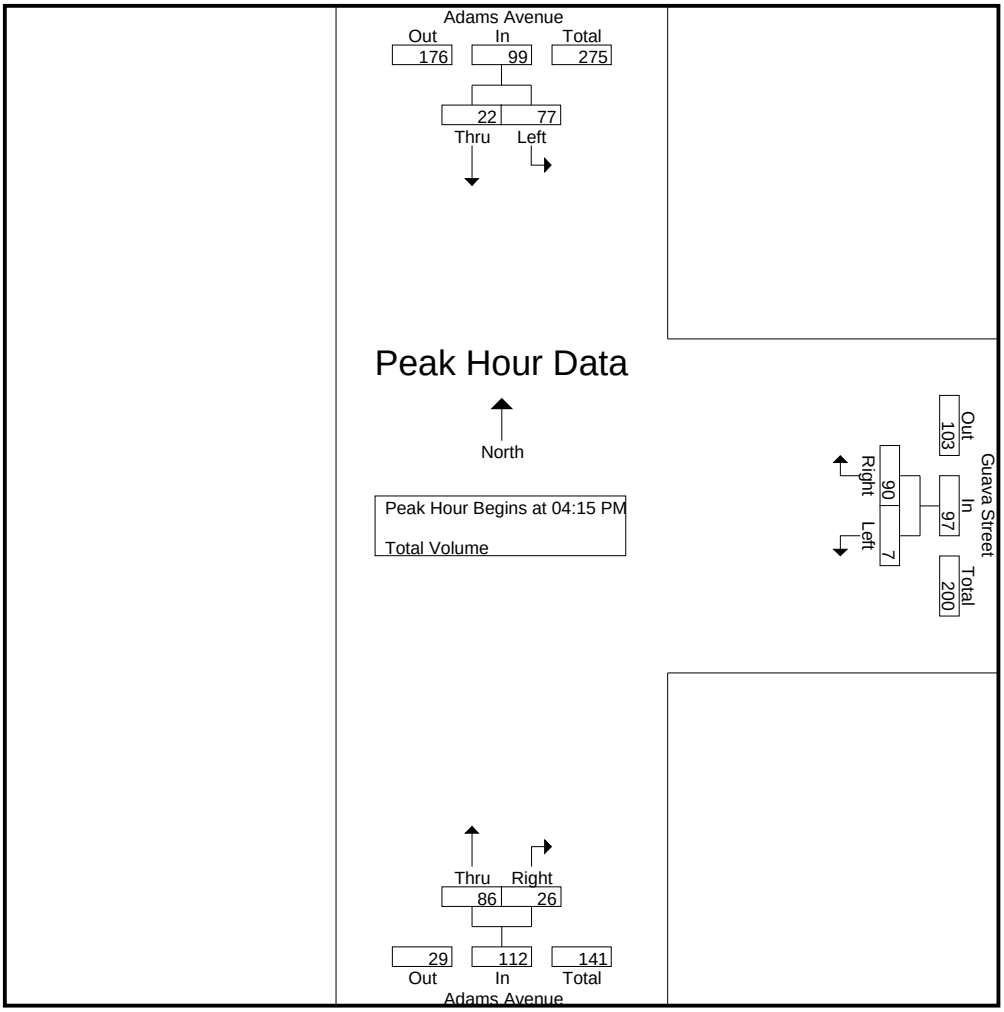

Peak Hour Analysis From 04:00 PM to 05:45 PM - Peak 1 of 1

Peak Hour for Each Approach Begins at:

	04:00 PM			05:00 PM			04:00 PM		
+0 mins.	15	**15**	**30**	1	**26**	**27**	20	**9**	29
+15 mins.	16	7	23	4	21	25	19	7	26
+30 mins.	**24**	5	29	**6**	21	27	**29**	6	**35**
+45 mins.	17	6	23	6	16	22	15	7	22
Total Volume	72	33	105	17	84	101	83	29	112
% App. Total	68.6	31.4		16.8	83.2		74.1	25.9	
PHF	.750	.550	.875	.708	.808	.935	.716	.806	.800

Counts Unlimited Inc.
PO Box 1178
Corona, CA 92878
(951) 268-6268

City of Murrieta
N/S: Nutmeg Street
E/W: Clinton Keith Road
Weather: Sunny

File Name : MURNUCKAM
Site Code : 10266027
Start Date : 12/2/2010
Page No : 1

Groups Printed- Total Volume

	Nutmeg Street Southbound				Clinton Keith Road Westbound				Nutmeg Street Northbound				Clinton Keith Road Eastbound				
Start Time	Left	Thru	Right	App. Total	Left	Thru	Right	App. Total	Left	Thru	Right	App. Total	Left	Thru	Right	App. Total	Int. Total
07:00 AM	19	21	10	50	35	86	8	129	6	2	30	38	2	57	7	66	283
07:15 AM	23	14	6	43	49	89	13	151	10	9	48	67	3	84	8	95	356
07:30 AM	11	16	7	34	59	111	8	178	16	8	43	67	7	84	16	107	386
07:45 AM	32	9	13	54	38	87	8	133	16	7	53	76	3	92	32	127	390
Total	85	60	36	181	181	373	37	591	48	26	174	248	15	317	63	395	1415
08:00 AM	35	16	13	64	60	117	10	187	27	10	57	94	4	97	23	124	469
08:15 AM	26	12	3	41	42	96	17	155	16	3	49	68	5	72	8	85	349
08:30 AM	23	8	4	35	28	88	15	131	9	6	45	60	2	97	7	106	332
08:45 AM	15	6	6	27	25	74	12	111	10	3	38	51	6	99	7	112	301
Total	99	42	26	167	155	375	54	584	62	22	189	273	17	365	45	427	1451
Grand Total	184	102	62	348	336	748	91	1175	110	48	363	521	32	682	108	822	2866
Apprch %	52.9	29.3	17.8		28.6	63.7	7.7		21.1	9.2	69.7		3.9	83	13.1		
Total %	6.4	3.6	2.2	12.1	11.7	26.1	3.2	41	3.8	1.7	12.7	18.2	1.1	23.8	3.8	28.7	

	Nutmeg Street Southbound				Clinton Keith Road Westbound				Nutmeg Street Northbound				Clinton Keith Road Eastbound				
Start Time	Left	Thru	Right	App. Total	Left	Thru	Right	App. Total	Left	Thru	Right	App. Total	Left	Thru	Right	App. Total	Int. Total
Peak Hour Analysis From 07:00 AM to 08:45 AM - Peak 1 of 1																	
Peak Hour for Entire Intersection Begins at 07:15 AM																	
07:15 AM	23	14	6	43	49	89	**13**	151	10	9	48	67	3	84	8	95	356
07:30 AM	11	**16**	7	34	59	111	8	178	16	8	43	67	**7**	84	16	107	386
07:45 AM	32	9	**13**	54	38	87	8	133	16	7	53	76	3	92	**32**	**127**	390
08:00 AM	**35**	16	13	**64**	**60**	**117**	10	**187**	**27**	**10**	**57**	**94**	4	**97**	23	124	**469**
Total Volume	101	55	39	195	206	404	39	649	69	34	201	304	17	357	79	453	1601
% App. Total	51.8	28.2	20		31.7	62.2	6		22.7	11.2	66.1		3.8	78.8	17.4		
PHF	.721	.859	.750	.762	.858	.863	.750	.868	.639	.850	.882	.809	.607	.920	.617	.892	.853

Counts Unlimited Inc.
PO Box 1178
Corona, CA 92878
(951) 268-6268

City of Murrieta
N/S: Nutmeg Street
E/W: Clinton Keith Road
Weather: Sunny

File Name : MURNUCKAM
Site Code : 10266027
Start Date : 12/2/2010
Page No : 2

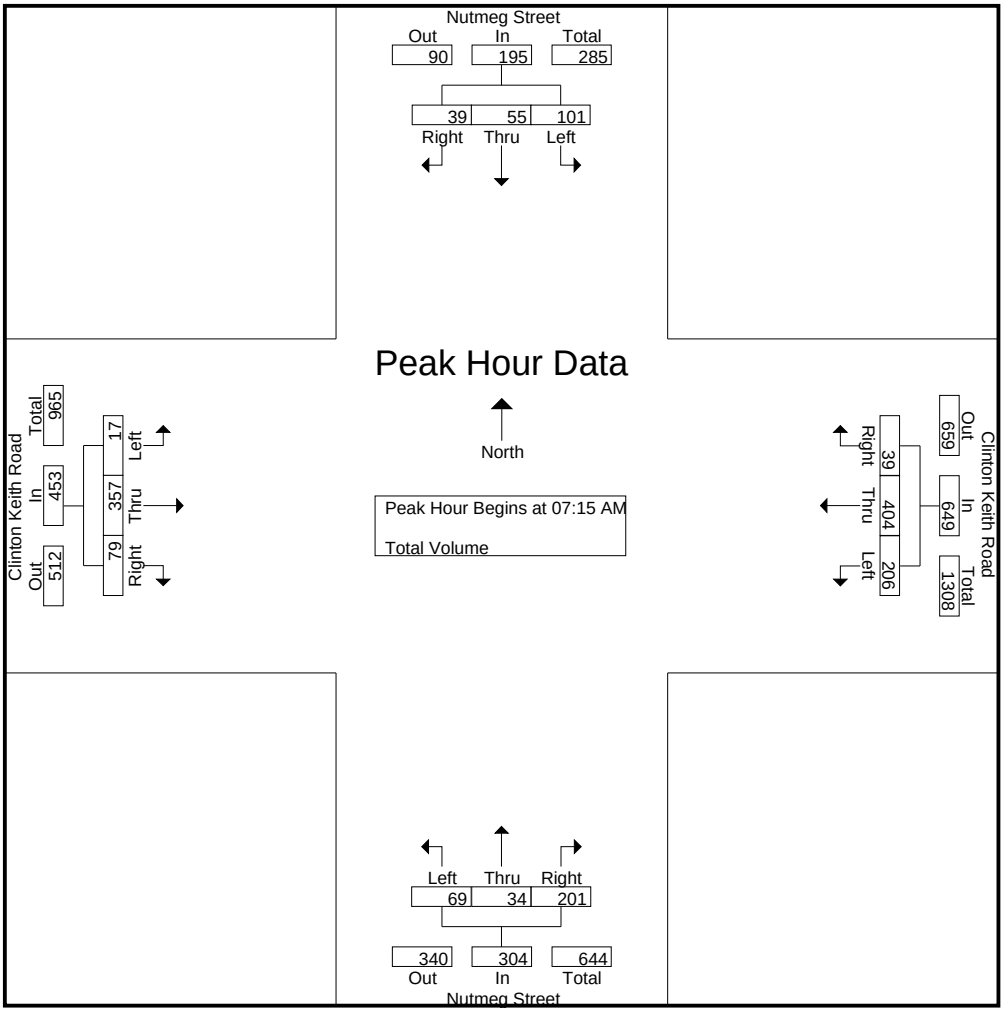

Peak Hour Analysis From 07:00 AM to 08:45 AM - Peak 1 of 1

Peak Hour for Each Approach Begins at:

	07:15 AM				07:30 AM				07:30 AM				07:15 AM			
+0 mins.	23	14	6	43	59	111	8	178	16	8	43	67	3	84	8	95
+15 mins.	11	**16**	7	34	38	87	8	133	16	7	53	76	**7**	84	16	107
+30 mins.	32	9	**13**	54	**60**	**117**	10	**187**	**27**	**10**	**57**	**94**	3	92	**32**	**127**
+45 mins.	**35**	16	13	**64**	42	96	**17**	155	16	3	49	68	4	**97**	23	124
Total Volume	101	55	39	195	199	411	43	653	75	28	202	305	17	357	79	453
% App. Total	51.8	28.2	20		30.5	62.9	6.6		24.6	9.2	66.2		3.8	78.8	17.4	
PHF	.721	.859	.750	.762	.829	.878	.632	.873	.694	.700	.886	.811	.607	.920	.617	.892

Counts Unlimited Inc.
PO Box 1178
Corona, CA 92878
(951) 268-6268

City of Murrieta
N/S: Nutmeg Street
E/W: Clinton Keith Road
Weather: Sunny

File Name : MURNUCKPM
Site Code : 10266027
Start Date : 12/2/2010
Page No : 1

Groups Printed- Total Volume

	Nutmeg Street Southbound				Clinton Keith Road Westbound				Nutmeg Street Northbound				Clinton Keith Road Eastbound				
Start Time	Left	Thru	Right	App. Total	Left	Thru	Right	App. Total	Left	Thru	Right	App. Total	Left	Thru	Right	App. Total	Int. Total
04:00 PM	10	9	7	26	56	94	14	164	12	14	26	52	6	110	9	125	367
04:15 PM	17	3	6	26	60	97	11	168	19	11	44	74	9	107	10	126	394
04:30 PM	12	3	10	25	53	104	14	171	12	10	51	73	10	104	14	128	397
04:45 PM	18	5	5	28	48	98	18	164	10	10	37	57	8	129	18	155	404
Total	57	20	28	105	217	393	57	667	53	45	158	256	33	450	51	534	1562
05:00 PM	13	9	4	26	48	96	16	160	16	16	50	82	10	152	12	174	442
05:15 PM	19	6	3	28	53	101	15	169	12	19	57	88	19	129	17	165	450
05:30 PM	11	3	9	23	61	102	24	187	10	16	48	74	15	123	22	160	444
05:45 PM	11	5	6	22	47	93	15	155	10	11	39	60	10	102	17	129	366
Total	54	23	22	99	209	392	70	671	48	62	194	304	54	506	68	628	1702
Grand Total	111	43	50	204	426	785	127	1338	101	107	352	560	87	956	119	1162	3264
Apprch %	54.4	21.1	24.5		31.8	58.7	9.5		18	19.1	62.9		7.5	82.3	10.2		
Total %	3.4	1.3	1.5	6.2	13.1	24.1	3.9	41	3.1	3.3	10.8	17.2	2.7	29.3	3.6	35.6	

	Nutmeg Street Southbound				Clinton Keith Road Westbound				Nutmeg Street Northbound				Clinton Keith Road Eastbound				
Start Time	Left	Thru	Right	App. Total	Left	Thru	Right	App. Total	Left	Thru	Right	App. Total	Left	Thru	Right	App. Total	Int. Total
Peak Hour Analysis From 04:00 PM to 05:45 PM - Peak 1 of 1																	
Peak Hour for Entire Intersection Begins at 04:45 PM																	
04:45 PM	18	5	5	**28**	48	98	18	164	10	10	37	57	8	129	18	155	404
05:00 PM	13	**9**	4	26	48	96	16	160	**16**	16	50	82	10	**152**	12	**174**	442
05:15 PM	**19**	6	3	28	53	101	15	169	12	**19**	**57**	**88**	**19**	129	17	165	**450**
05:30 PM	11	3	**9**	23	**61**	**102**	**24**	**187**	10	16	48	74	15	123	**22**	160	444
Total Volume	61	23	21	105	210	397	73	680	48	61	192	301	52	533	69	654	1740
% App. Total	58.1	21.9	20		30.9	58.4	10.7		15.9	20.3	63.8		8	81.5	10.6		
PHF	.803	.639	.583	.938	.861	.973	.760	.909	.750	.803	.842	.855	.684	.877	.784	.940	.967

Counts Unlimited Inc.
PO Box 1178
Corona, CA 92878
(951) 268-6268

City of Murrieta
N/S: Nutmeg Street
E/W: Clinton Keith Road
Weather: Sunny

File Name : MURNUCKPM
Site Code : 10266027
Start Date : 12/2/2010
Page No : 2

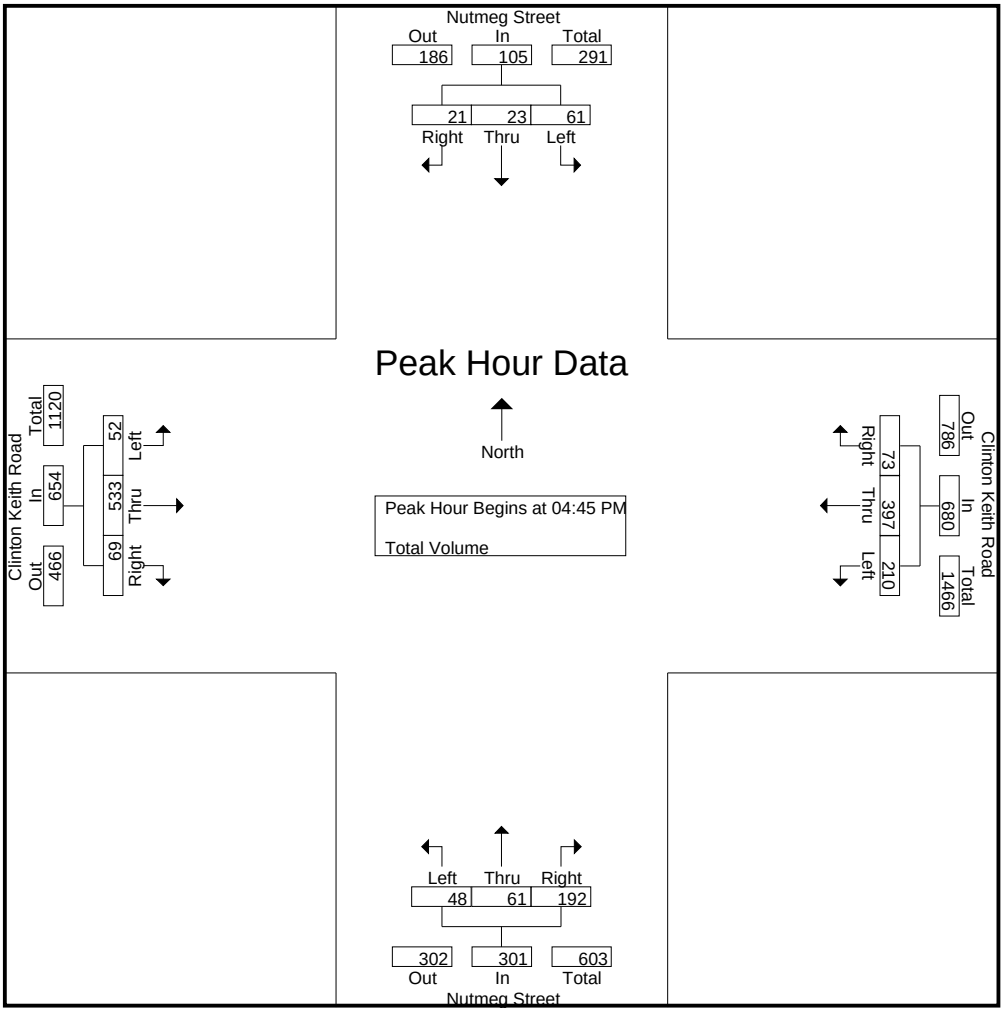

Peak Hour Analysis From 04:00 PM to 05:45 PM - Peak 1 of 1

Peak Hour for Each Approach Begins at:

	04:30 PM				04:45 PM				05:00 PM				04:45 PM			
+0 mins.	12	3	**10**	25	48	98	18	164	**16**	16	50	82	8	129	18	155
+15 mins.	18	5	5	**28**	48	96	16	160	12	**19**	**57**	**88**	10	**152**	12	**174**
+30 mins.	13	**9**	4	26	53	101	15	169	10	16	48	74	**19**	129	17	165
+45 mins.	**19**	6	3	28	**61**	**102**	**24**	**187**	10	11	39	60	15	123	**22**	160
Total Volume	62	23	22	107	210	397	73	680	48	62	194	304	52	533	69	654
% App. Total	57.9	21.5	20.6		30.9	58.4	10.7		15.8	20.4	63.8		8	81.5	10.6	
PHF	.816	.639	.550	.955	.861	.973	.760	.909	.750	.816	.851	.864	.684	.877	.784	.940

Counts Unlimited Inc.
PO Box 1178
Corona, CA 92878
(951) 268-6268

City of Murrieta
N/S: Murrieta Oaks Avenue
E/W: Clinton Keith Road
Weather: Sunny

File Name : MURMOCKAM
Site Code : 10266044
Start Date : 12/2/2010
Page No : 1

Groups Printed- Total Volume

	Clinton Keith Road Westbound			Murrieta Oaks Avenue Northbound			Clinton Keith Road Eastbound			
Start Time	Left	Thru	App. Total	Left	Right	App. Total	Thru	Right	App. Total	Int. Total
07:00 AM	21	168	189	15	0	15	209	21	230	434
07:15 AM	14	199	213	13	71	84	211	14	225	522
07:30 AM	14	217	231	11	42	53	222	16	238	522
07:45 AM	26	179	205	7	33	40	178	62	240	485
Total	75	763	838	46	146	192	820	113	933	1963
08:00 AM	65	180	245	47	63	110	212	148	360	715
08:15 AM	53	176	229	57	74	131	250	28	278	638
08:30 AM	11	172	183	6	25	31	227	15	242	456
08:45 AM	9	135	144	8	18	26	219	8	227	397
Total	138	663	801	118	180	298	908	199	1107	2206
Grand Total	213	1426	1639	164	326	490	1728	312	2040	4169
Apprch %	13	87		33.5	66.5		84.7	15.3		
Total %	5.1	34.2	39.3	3.9	7.8	11.8	41.4	7.5	48.9	

	Clinton Keith Road Westbound			Murrieta Oaks Avenue Northbound			Clinton Keith Road Eastbound			
Start Time	Left	Thru	App. Total	Left	Right	App. Total	Thru	Right	App. Total	Int. Total
Peak Hour Analysis From 07:00 AM to 08:45 AM - Peak 1 of 1										
Peak Hour for Entire Intersection Begins at 07:30 AM										
07:30 AM	14	**217**	231	11	42	53	222	16	238	522
07:45 AM	26	179	205	7	33	40	178	62	240	485
08:00 AM	**65**	180	**245**	47	63	110	212	**148**	**360**	**715**
08:15 AM	53	176	229	**57**	**74**	**131**	**250**	28	278	638
Total Volume	158	752	910	122	212	334	862	254	1116	2360
% App. Total	17.4	82.6		36.5	63.5		77.2	22.8		
PHF	.608	.866	.929	.535	.716	.637	.862	.429	.775	.825

Counts Unlimited Inc.
PO Box 1178
Corona, CA 92878
(951) 268-6268

City of Murrieta
N/S: Murrieta Oaks Avenue
E/W: Clinton Keith Road
Weather: Sunny

File Name : MURMOCKAM
Site Code : 10266044
Start Date : 12/2/2010
Page No : 2

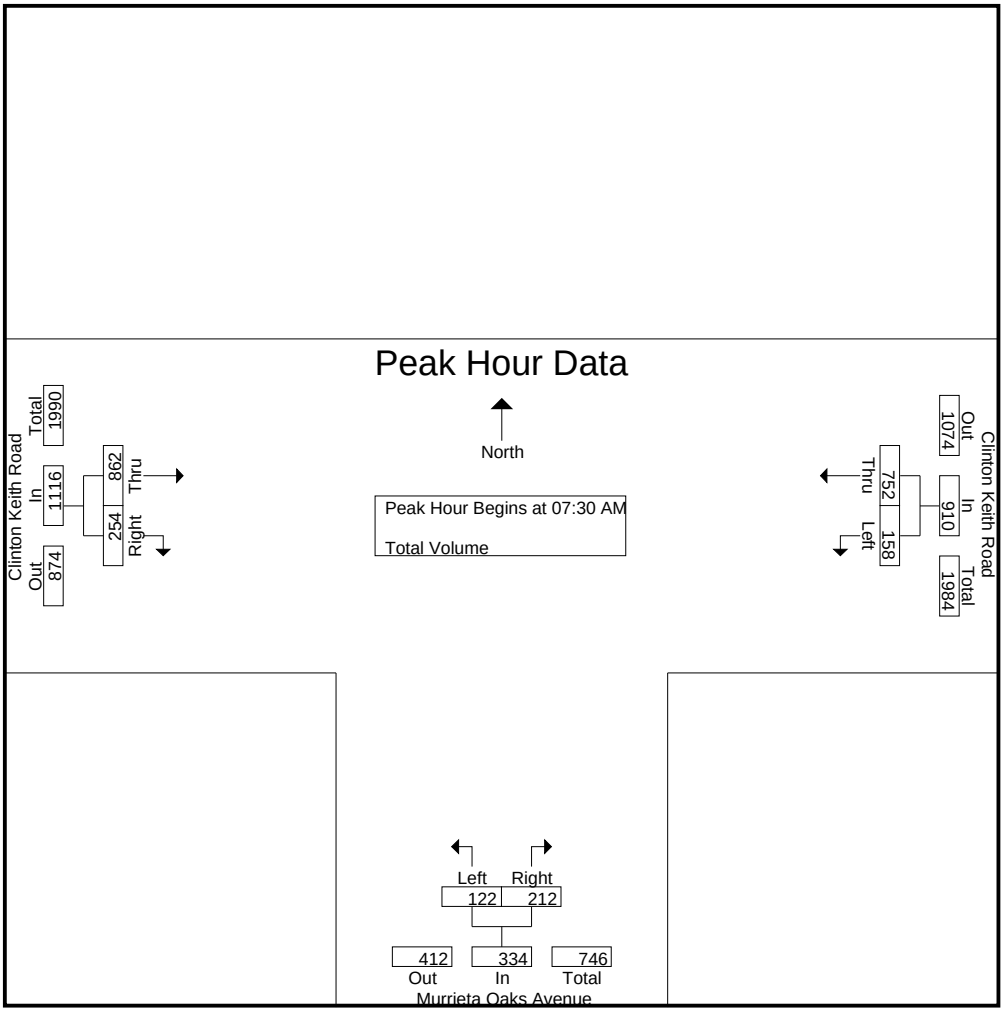

Peak Hour Analysis From 07:00 AM to 08:45 AM - Peak 1 of 1

Peak Hour for Each Approach Begins at:

	07:30 AM			07:30 AM			07:45 AM		
+0 mins.	14	**217**	231	11	42	53	178	62	240
+15 mins.	26	179	205	7	33	40	212	**148**	**360**
+30 mins.	**65**	180	**245**	47	63	110	**250**	28	278
+45 mins.	53	176	229	**57**	**74**	**131**	227	15	242
Total Volume	158	752	910	122	212	334	867	253	1120
% App. Total	17.4	82.6		36.5	63.5		77.4	22.6	
PHF	.608	.866	.929	.535	.716	.637	.867	.427	.778

Counts Unlimited Inc.
PO Box 1178
Corona, CA 92878
(951) 268-6268

City of Murrieta
N/S: Murrieta Oaks Avenue
E/W: Clinton Keith Road
Weather: Sunny

File Name : MURMOCKPM
Site Code : 10266044
Start Date : 12/2/2010
Page No : 1

Groups Printed- Total Volume

	Clinton Keith Road Westbound			Murrieta Oaks Avenue Northbound			Clinton Keith Road Eastbound			
Start Time	Left	Thru	App. Total	Left	Right	App. Total	Thru	Right	App. Total	Int. Total
04:00 PM	13	177	190	4	28	32	181	6	187	409
04:15 PM	24	237	261	8	23	31	250	8	258	550
04:30 PM	14	238	252	6	15	21	225	10	235	508
04:45 PM	25	207	232	7	18	25	284	10	294	551
Total	76	859	935	25	84	109	940	34	974	2018
05:00 PM	25	239	264	9	21	30	237	8	245	539
05:15 PM	26	235	261	6	12	18	304	12	316	595
05:30 PM	17	265	282	10	16	26	275	7	282	590
05:45 PM	23	197	220	5	6	11	232	3	235	466
Total	91	936	1027	30	55	85	1048	30	1078	2190
Grand Total	167	1795	1962	55	139	194	1988	64	2052	4208
Apprch %	8.5	91.5		28.4	71.6		96.9	3.1		
Total %	4	42.7	46.6	1.3	3.3	4.6	47.2	1.5	48.8	

	Clinton Keith Road Westbound			Murrieta Oaks Avenue Northbound			Clinton Keith Road Eastbound			
Start Time	Left	Thru	App. Total	Left	Right	App. Total	Thru	Right	App. Total	Int. Total
Peak Hour Analysis From 04:00 PM to 05:45 PM - Peak 1 of 1										
Peak Hour for Entire Intersection Begins at 04:45 PM										
04:45 PM	25	207	232	7	18	25	284	10	294	551
05:00 PM	25	239	264	9	**21**	**30**	237	8	245	539
05:15 PM	**26**	235	261	6	12	18	**304**	**12**	**316**	**595**
05:30 PM	17	**265**	**282**	**10**	16	26	275	7	282	590
Total Volume	93	946	1039	32	67	99	1100	37	1137	2275
% App. Total	9	91		32.3	67.7		96.7	3.3		
PHF	.894	.892	.921	.800	.798	.825	.905	.771	.900	.956

Counts Unlimited Inc.
PO Box 1178
Corona, CA 92878
(951) 268-6268

City of Murrieta
N/S: Murrieta Oaks Avenue
E/W: Clinton Keith Road
Weather: Sunny

File Name : MURMOCKPM
Site Code : 10266044
Start Date : 12/2/2010
Page No : 2

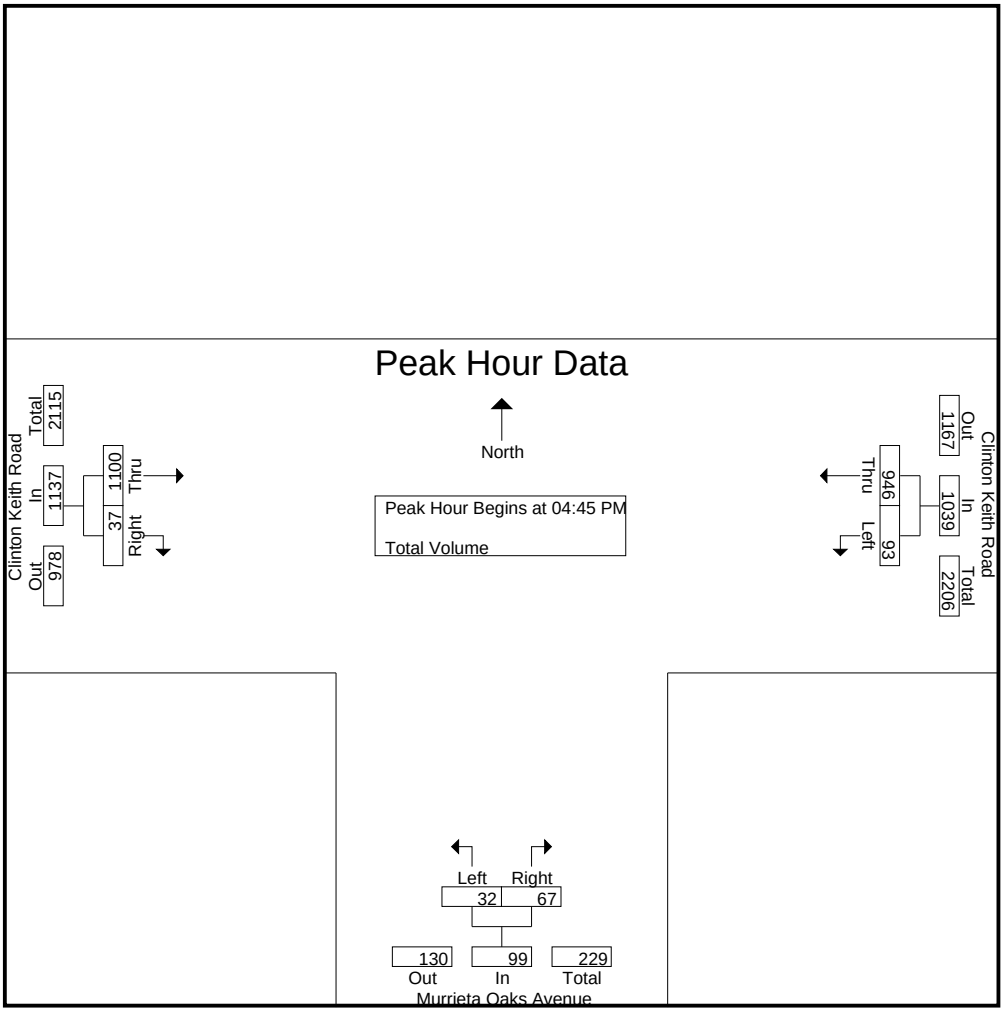

Peak Hour Analysis From 04:00 PM to 05:45 PM - Peak 1 of 1

Peak Hour for Each Approach Begins at:

	04:45 PM			04:00 PM			04:45 PM		
+0 mins.	25	207	232	4	**28**	**32**	284	10	294
+15 mins.	25	239	264	**8**	23	31	237	8	245
+30 mins.	**26**	235	261	6	15	21	**304**	**12**	**316**
+45 mins.	17	**265**	**282**	7	18	25	275	7	282
Total Volume	93	946	1039	25	84	109	1100	37	1137
% App. Total	9	91		22.9	77.1		96.7	3.3	
PHF	.894	.892	.921	.781	.750	.852	.905	.771	.900

Counts Unlimited Inc.
PO Box 1178
Corona, CA 92878
(951) 268-6268

City of Menifee
N/S: I-215 Southbound Ramps
E/W: Scott Road
Weather: Sunny

File Name : MEN215SSCAM
Site Code : 10209066
Start Date : 10/13/2010
Page No : 1

Groups Printed- Total Volume

	I-215 Southbound Off Ramp Southbound				Scott Road Westbound				I-215 Southbound On Ramp Northbound				Scott Road Eastbound				
Start Time	Left	Thru	Right	App. Total	Left	Thru	Right	App. Total	Left	Thru	Right	App. Total	Left	Thru	Right	App. Total	Int. Total
06:00 AM	52	0	29	81	112	74	0	186	0	0	0	0	0	55	35	90	357
06:15 AM	67	0	26	93	107	102	0	209	0	0	0	0	0	65	38	103	405
06:30 AM	53	0	26	79	110	93	0	203	0	0	0	0	0	79	54	133	415
06:45 AM	71	0	27	98	117	86	0	203	0	0	0	0	0	96	46	142	443
Total	243	0	108	351	446	355	0	801	0	0	0	0	0	295	173	468	1620
07:00 AM	68	2	27	97	111	120	0	231	0	0	0	0	0	76	59	135	463
07:15 AM	64	1	23	88	99	151	0	250	0	0	0	0	0	126	82	208	546
07:30 AM	65	0	21	86	112	160	0	272	0	0	0	0	0	148	68	216	574
07:45 AM	62	2	24	88	123	104	0	227	0	0	0	0	0	128	57	185	500
Total	259	5	95	359	445	535	0	980	0	0	0	0	0	478	266	744	2083
08:00 AM	67	1	20	88	113	86	0	199	0	0	0	0	0	133	113	246	533
08:15 AM	68	0	26	94	118	94	0	212	0	0	0	0	0	89	97	186	492
08:30 AM	70	0	30	100	127	85	0	212	0	0	0	0	0	83	77	160	472
08:45 AM	65	0	20	85	143	66	0	209	0	0	0	0	0	95	46	141	435
Total	270	1	96	367	501	331	0	832	0	0	0	0	0	400	333	733	1932
Grand Total	772	6	299	1077	1392	1221	0	2613	0	0	0	0	0	1173	772	1945	5635
Apprch %	71.7	0.6	27.8		53.3	46.7	0		0	0	0		0	60.3	39.7		
Total %	13.7	0.1	5.3	19.1	24.7	21.7	0	46.4	0	0	0	0	0	20.8	13.7	34.5	

	I-215 Southbound Off Ramp Southbound				Scott Road Westbound				I-215 Southbound On Ramp Northbound				Scott Road Eastbound				
Start Time	Left	Thru	Right	App. Total	Left	Thru	Right	App. Total	Left	Thru	Right	App. Total	Left	Thru	Right	App. Total	Int. Total
Peak Hour Analysis From 06:00 AM to 08:45 AM - Peak 1 of 1																	
Peak Hour for Entire Intersection Begins at 07:15 AM																	
07:15 AM	64	1	23	**88**	99	151	0	250	0	0	0	0	0	126	82	208	546
07:30 AM	65	0	21	86	112	**160**	0	**272**	0	0	0	0	0	**148**	68	216	**574**
07:45 AM	62	**2**	**24**	88	**123**	104	0	227	0	0	0	0	0	128	57	185	500
08:00 AM	**67**	1	20	88	113	86	0	199	0	0	0	0	0	133	**113**	**246**	533
Total Volume	258	4	88	350	447	501	0	948	0	0	0	0	0	535	320	855	2153
% App. Total	73.7	1.1	25.1		47.2	52.8	0		0	0	0		0	62.6	37.4		
PHF	.963	.500	.917	.994	.909	.783	.000	.871	.000	.000	.000	.000	.000	.904	.708	.869	.938

Counts Unlimited Inc.
PO Box 1178
Corona, CA 92878
(951) 268-6268

City of Menifee
N/S: I-215 Southbound Ramps
E/W: Scott Road
Weather: Sunny

File Name : MEN215SSCAM
Site Code : 10209066
Start Date : 10/13/2010
Page No : 2

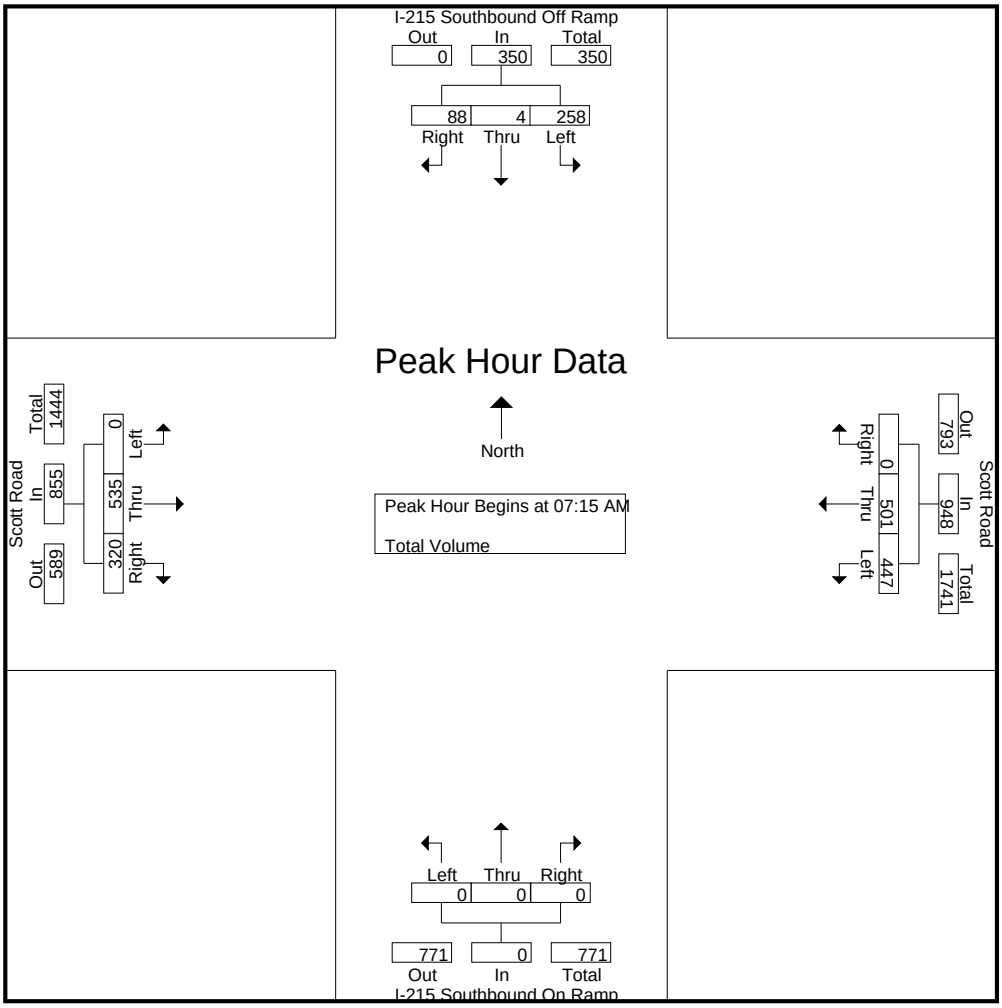

Peak Hour Analysis From 06:00 AM to 08:45 AM - Peak 1 of 1
Peak Hour for Each Approach Begins at:

	07:45 AM				07:00 AM				06:00 AM				07:15 AM			
+0 mins.	62	**2**	24	88	111	120	0	231	0	0	0	0	0	126	82	208
+15 mins.	67	1	20	88	99	151	0	250	0	0	0	0	0	**148**	68	216
+30 mins.	68	0	26	94	112	**160**	0	**272**	0	0	0	0	0	128	57	185
+45 mins.	**70**	0	**30**	**100**	**123**	104	0	227	0	0	0	0	0	133	**113**	**246**
Total Volume	267	3	100	370	445	535	0	980	0	0	0	0	0	535	320	855
% App. Total	72.2	0.8	27		45.4	54.6	0		0	0	0		0	62.6	37.4	
PHF	.954	.375	.833	.925	.904	.836	.000	.901	.000	.000	.000	.000	.000	.904	.708	.869

Counts Unlimited Inc.
PO Box 1178
Corona, CA 92878
(951) 268-6268

City of Menifee
N/S: I-215 Southbound Ramps
E/W: Scot Road
Weather: Sunny

File Name : MEN215SSCPM
Site Code : 10209066
Start Date : 10/13/2010
Page No : 1

Groups Printed- Total Volume

	I-215 Southbound Off Ramp Southbound				Westbound				I-215 Southbound On Ramp Northbound				Eastbound				
Start Time	Left	Thru	Right	App. Total	Left	Thru	Right	App. Total	Left	Thru	Right	App. Total	Left	Thru	Right	App. Total	Int. Total
04:00 PM	85	0	26	111	122	157	0	279	0	0	0	0	0	138	63	201	591
04:15 PM	87	0	35	122	98	163	0	261	0	0	0	0	0	133	54	187	570
04:30 PM	88	0	21	109	115	147	0	262	0	0	0	0	0	122	52	174	545
04:45 PM	88	2	25	115	125	143	0	268	0	0	0	0	0	134	18	152	535
Total	348	2	107	457	460	610	0	1070	0	0	0	0	0	527	187	714	2241
05:00 PM	86	1	26	113	133	158	0	291	0	0	0	0	0	143	56	199	603
05:15 PM	83	0	27	110	101	157	0	258	0	0	0	0	0	156	55	211	579
05:30 PM	77	1	36	114	106	145	0	251	0	0	0	0	0	147	36	183	548
05:45 PM	81	0	38	119	88	143	0	231	0	0	0	0	0	158	27	185	535
Total	327	2	127	456	428	603	0	1031	0	0	0	0	0	604	174	778	2265
06:00 PM	98	0	28	126	112	141	0	253	0	0	0	0	0	136	29	165	544
06:15 PM	96	0	33	129	103	120	0	223	0	0	0	0	0	141	31	172	524
06:30 PM	99	0	39	138	98	119	0	217	0	0	0	0	0	145	21	166	521
06:45 PM	90	0	25	115	91	119	0	210	0	0	0	0	0	149	32	181	506
Total	383	0	125	508	404	499	0	903	0	0	0	0	0	571	113	684	2095
Grand Total	1058	4	359	1421	1292	1712	0	3004	0	0	0	0	0	1702	474	2176	6601
Apprch %	74.5	0.3	25.3		43	57	0		0	0	0		0	78.2	21.8		
Total %	16	0.1	5.4	21.5	19.6	25.9	0	45.5	0	0	0	0	0	25.8	7.2	33	

	I-215 Southbound Off Ramp Southbound				Westbound				I-215 Southbound On Ramp Northbound				Eastbound				
Start Time	Left	Thru	Right	App. Total	Left	Thru	Right	App. Total	Left	Thru	Right	App. Total	Left	Thru	Right	App. Total	Int. Total
Peak Hour Analysis From 04:00 PM to 06:45 PM - Peak 1 of 1																	
Peak Hour for Entire Intersection Begins at 04:45 PM																	
04:45 PM	**88**	**2**	25	**115**	125	143	0	268	0	0	0	0	0	134	18	152	535
05:00 PM	86	1	26	113	**133**	**158**	0	**291**	0	0	0	0	0	143	**56**	199	**603**
05:15 PM	83	0	27	110	101	157	0	258	0	0	0	0	0	**156**	55	**211**	579
05:30 PM	77	1	**36**	114	106	145	0	251	0	0	0	0	0	147	36	183	548
Total Volume	334	4	114	452	465	603	0	1068	0	0	0	0	0	580	165	745	2265
% App. Total	73.9	0.9	25.2		43.5	56.5	0		0	0	0		0	77.9	22.1		
PHF	.949	.500	.792	.983	.874	.954	.000	.918	.000	.000	.000	.000	.000	.929	.737	.883	.939

Counts Unlimited Inc.
PO Box 1178
Corona, CA 92878
(951) 268-6268

City of Menifee
N/S: I-215 Southbound Ramps
E/W: Scot Road
Weather: Sunny

File Name : MEN215SSCPM
Site Code : 10209066
Start Date : 10/13/2010
Page No : 2

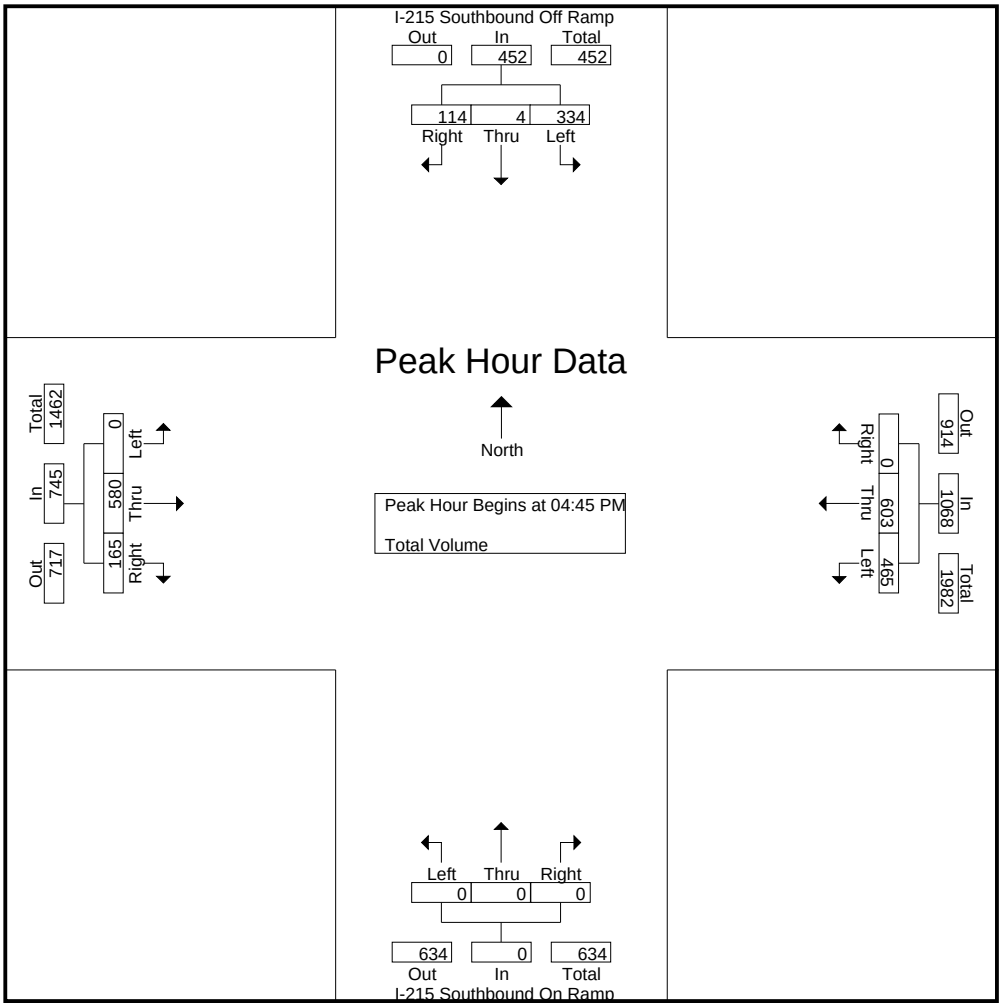

Peak Hour Analysis From 04:00 PM to 06:45 PM - Peak 1 of 1

Peak Hour for Each Approach Begins at:

	05:45 PM				04:15 PM				04:00 PM				05:00 PM			
+0 mins.	81	0	38	119	98	**163**	0	261	0	0	0	0	0	143	**56**	199
+15 mins.	98	0	28	126	115	147	0	262	0	0	0	0	0	156	55	**211**
+30 mins.	96	0	33	129	125	143	0	268	0	0	0	0	0	147	36	183
+45 mins.	**99**	0	**39**	**138**	**133**	158	0	**291**	0	0	0	0	0	**158**	27	185
Total Volume	374	0	138	512	471	611	0	1082	0	0	0	0	0	604	174	778
% App. Total	73	0	27		43.5	56.5	0		0	0	0		0	77.6	22.4	
PHF	.944	.000	.885	.928	.885	.937	.000	.930	.000	.000	.000	.000	.000	.956	.777	.922

Counts Unlimited Inc.
PO Box 1178
Corona, CA 92878
(951) 268-6268

City of Menifee
N/S: I-215 Northbound Ramps
E/W: Scott Road
Weather: Sunny

File Name : MEN215NSCAM
Site Code : 10209063
Start Date : 10/13/2010
Page No : 1

Groups Printed- Passenger Vehicles - Large 2 Axle Vehicles - 3 Axle Vehicles - 4+ Axle Trucks

	I-215 Northbound On Ramp Southbound				Scott Road Westbound				I-215 Northbound Off Ramp Northbound				Scott Road Eastbound				
Start Time	Left	Thru	Right	App. Total	Left	Thru	Right	App. Total	Left	Thru	Right	App. Total	Left	Thru	Right	App. Total	Int. Total
06:00 AM	0	0	0	0	0	171	94	265	14	0	23	37	25	75	0	100	402
06:15 AM	0	0	0	0	0	170	94	264	32	0	23	55	26	103	0	129	448
06:30 AM	0	0	0	0	0	184	99	283	19	0	34	53	31	99	0	130	466
06:45 AM	0	0	0	0	0	177	99	276	25	1	58	84	51	119	0	170	530
Total	0	0	0	0	0	702	386	1088	90	1	138	229	133	396	0	529	1846
07:00 AM	0	0	0	0	0	179	109	288	30	9	70	109	27	100	0	127	524
07:15 AM	0	0	0	0	0	193	105	298	50	2	84	136	26	167	0	193	627
07:30 AM	0	0	0	0	0	226	75	301	36	0	90	126	31	176	0	207	634
07:45 AM	0	0	0	0	0	194	91	285	29	1	105	135	24	160	0	184	604
Total	0	0	0	0	0	792	380	1172	145	12	349	506	108	603	0	711	2389
08:00 AM	0	0	0	0	0	171	58	229	17	0	79	96	26	162	0	188	513
08:15 AM	0	0	0	0	0	192	79	271	23	0	70	93	22	141	0	163	527
08:30 AM	0	0	0	0	0	189	68	257	25	0	83	108	24	118	0	142	507
08:45 AM	0	0	0	0	0	178	61	239	21	0	95	116	24	137	0	161	516
Total	0	0	0	0	0	730	266	996	86	0	327	413	96	558	0	654	2063
Grand Total	0	0	0	0	0	2224	1032	3256	321	13	814	1148	337	1557	0	1894	6298
Apprch %	0	0	0		0	68.3	31.7		28	1.1	70.9		17.8	82.2	0		
Total %	0	0	0	0	0	35.3	16.4	51.7	5.1	0.2	12.9	18.2	5.4	24.7	0	30.1	
Passenger Vehicles	0	0	0	0	0	2161	1004	3165	305	13	793	1111	316	1478	0	1794	6070
% Passenger Vehicles	0	0	0	0	0	97.2	97.3	97.2	95	100	97.4	96.8	93.8	94.9	0	94.7	96.4
Large 2 Axle Vehicles	0	0	0	0	0	47	23	70	14	0	12	26	14	57	0	71	167
% Large 2 Axle Vehicles	0	0	0	0	0	2.1	2.2	2.1	4.4	0	1.5	2.3	4.2	3.7	0	3.7	2.7
3 Axle Vehicles	0	0	0	0	0	5	0	5	1	0	3	4	2	7	0	9	18
% 3 Axle Vehicles	0	0	0	0	0	0.2	0	0.2	0.3	0	0.4	0.3	0.6	0.4	0	0.5	0.3
4+ Axle Trucks	0	0	0	0	0	11	5	16	1	0	6	7	5	15	0	20	43
% 4+ Axle Trucks	0	0	0	0	0	0.5	0.5	0.5	0.3	0	0.7	0.6	1.5	1	0	1.1	0.7

	I-215 Northbound On Ramp Southbound				Scott Road Westbound				I-215 Northbound Off Ramp Northbound				Scott Road Eastbound				
Start Time	Left	Thru	Right	App. Total	Left	Thru	Right	App. Total	Left	Thru	Right	App. Total	Left	Thru	Right	App. Total	Int. Total
Peak Hour Analysis From 06:00 AM to 08:45 AM - Peak 1 of 1																	
Peak Hour for Entire Intersection Begins at 07:00 AM																	
07:00 AM	0	0	0	0	0	179	**109**	288	30	**9**	70	109	27	100	0	127	524
07:15 AM	0	0	0	0	0	193	105	298	**50**	2	84	**136**	26	167	0	193	627
07:30 AM	0	0	0	0	0	**226**	75	**301**	36	0	90	126	**31**	**176**	0	**207**	**634**
07:45 AM	0	0	0	0	0	194	91	285	29	1	**105**	135	24	160	0	184	604
Total Volume	0	0	0	0	0	792	380	1172	145	12	349	506	108	603	0	711	2389
% App. Total	0	0	0		0	67.6	32.4		28.7	2.4	69		15.2	84.8	0		
PHF	.000	.000	.000	.000	.000	.876	.872	.973	.725	.333	.831	.930	.871	.857	.000	.859	.942

Counts Unlimited Inc.
PO Box 1178
Corona, CA 92878
(951) 268-6268

City of Menifee
N/S: I-215 Northbound Ramps
E/W: Scott Road
Weather: Sunny

File Name : MEN215NSCAM
Site Code : 10209063
Start Date : 10/13/2010
Page No : 2

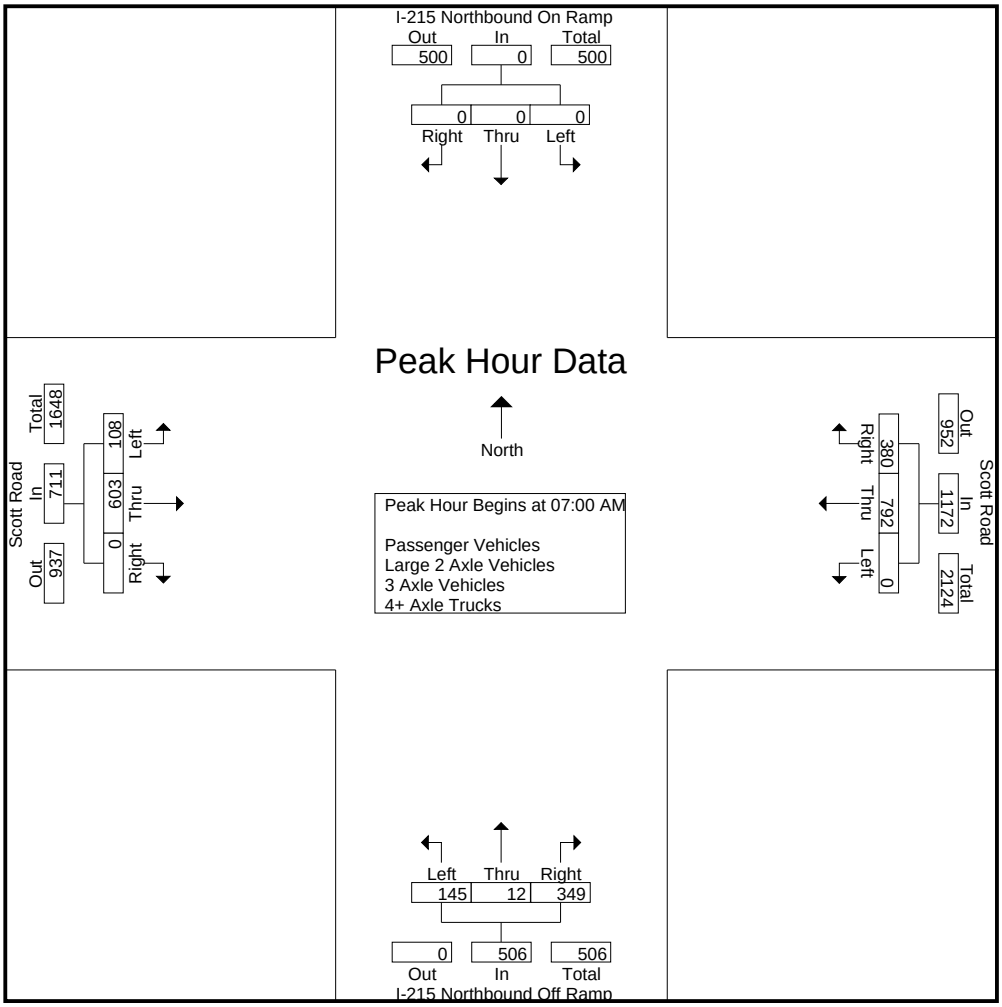

Peak Hour Analysis From 06:00 AM to 08:45 AM - Peak 1 of 1

Peak Hour for Each Approach Begins at:

	06:00 AM				07:00 AM				07:00 AM				07:15 AM			
+0 mins.	0	0	0	0	0	179	**109**	288	30	**9**	70	109	26	167	0	193
+15 mins.	0	0	0	0	0	193	105	298	**50**	2	84	**136**	**31**	**176**	0	**207**
+30 mins.	0	0	0	0	0	**226**	75	**301**	36	0	90	126	24	160	0	184
+45 mins.	0	0	0	0	0	194	91	285	29	1	**105**	135	26	162	0	188
Total Volume	0	0	0	0	0	792	380	1172	145	12	349	506	107	665	0	772
% App. Total	0	0	0		0	67.6	32.4		28.7	2.4	69		13.9	86.1	0	
PHF	.000	.000	.000	.000	.000	.876	.872	.973	.725	.333	.831	.930	.863	.945	.000	.932

Counts Unlimited Inc.
PO Box 1178
Corona, CA 92878
(951) 268-6268

City of Menifee
N/S: I-215 Northbound Ramps
E/W: Scott Road
Weather: Sunny

File Name : MEN215NSCAM
Site Code : 10209063
Start Date : 10/13/2010
Page No : 1

Groups Printed- Passenger Vehicles

	I-215 Northbound On Ramp Southbound				Scott Road Westbound				I-215 Northbound Off Ramp Northbound				Scott Road Eastbound				
Start Time	Left	Thru	Right	App. Total	Left	Thru	Right	App. Total	Left	Thru	Right	App. Total	Left	Thru	Right	App. Total	Int. Total
06:00 AM	0	0	0	0	0	167	92	259	13	0	22	35	21	72	0	93	387
06:15 AM	0	0	0	0	0	168	91	259	32	0	21	53	24	92	0	116	428
06:30 AM	0	0	0	0	0	181	98	279	18	0	30	48	29	92	0	121	448
06:45 AM	0	0	0	0	0	174	97	271	25	1	55	81	48	112	0	160	512
Total	0	0	0	0	0	690	378	1068	88	1	128	217	122	368	0	490	1775
07:00 AM	0	0	0	0	0	175	104	279	29	9	67	105	26	96	0	122	506
07:15 AM	0	0	0	0	0	191	103	294	48	2	80	130	24	154	0	178	602
07:30 AM	0	0	0	0	0	225	73	298	33	0	89	122	28	167	0	195	615
07:45 AM	0	0	0	0	0	187	90	277	29	1	105	135	24	158	0	182	594
Total	0	0	0	0	0	778	370	1148	139	12	341	492	102	575	0	677	2317
08:00 AM	0	0	0	0	0	166	56	222	16	0	79	95	25	152	0	177	494
08:15 AM	0	0	0	0	0	184	77	261	19	0	68	87	22	137	0	159	507
08:30 AM	0	0	0	0	0	179	63	242	24	0	83	107	21	111	0	132	481
08:45 AM	0	0	0	0	0	164	60	224	19	0	94	113	24	135	0	159	496
Total	0	0	0	0	0	693	256	949	78	0	324	402	92	535	0	627	1978
Grand Total	0	0	0	0	0	2161	1004	3165	305	13	793	1111	316	1478	0	1794	6070
Apprch %	0	0	0		0	68.3	31.7		27.5	1.2	71.4		17.6	82.4	0		
Total %	0	0	0	0	0	35.6	16.5	52.1	5	0.2	13.1	18.3	5.2	24.3	0	29.6	

	I-215 Northbound On Ramp Southbound				Scott Road Westbound				I-215 Northbound Off Ramp Northbound				Scott Road Eastbound				
Start Time	Left	Thru	Right	App. Total	Left	Thru	Right	App. Total	Left	Thru	Right	App. Total	Left	Thru	Right	App. Total	Int. Total
Peak Hour Analysis From 07:00 AM to 07:45 AM - Peak 1 of 1																	
Peak Hour for Entire Intersection Begins at 07:00 AM																	
07:00 AM	0	0	0	0	0	175	**104**	279	29	**9**	67	105	26	96	0	122	506
07:15 AM	0	0	0	0	0	191	103	294	**48**	2	80	130	24	154	0	178	602
07:30 AM	0	0	0	0	0	**225**	73	**298**	33	0	89	122	**28**	**167**	0	**195**	**615**
07:45 AM	0	0	0	0	0	187	90	277	29	1	**105**	**135**	24	158	0	182	594
Total Volume	0	0	0	0	0	778	370	1148	139	12	341	492	102	575	0	677	2317
% App. Total	0	0	0		0	67.8	32.2		28.3	2.4	69.3		15.1	84.9	0		
PHF	.000	.000	.000	.000	.000	.864	.889	.963	.724	.333	.812	.911	.911	.861	.000	.868	.942

Counts Unlimited Inc.
PO Box 1178
Corona, CA 92878
(951) 268-6268

City of Menifee
N/S: I-215 Northbound Ramps
E/W: Scott Road
Weather: Sunny

File Name : MEN215NSCAM
Site Code : 10209063
Start Date : 10/13/2010
Page No : 2

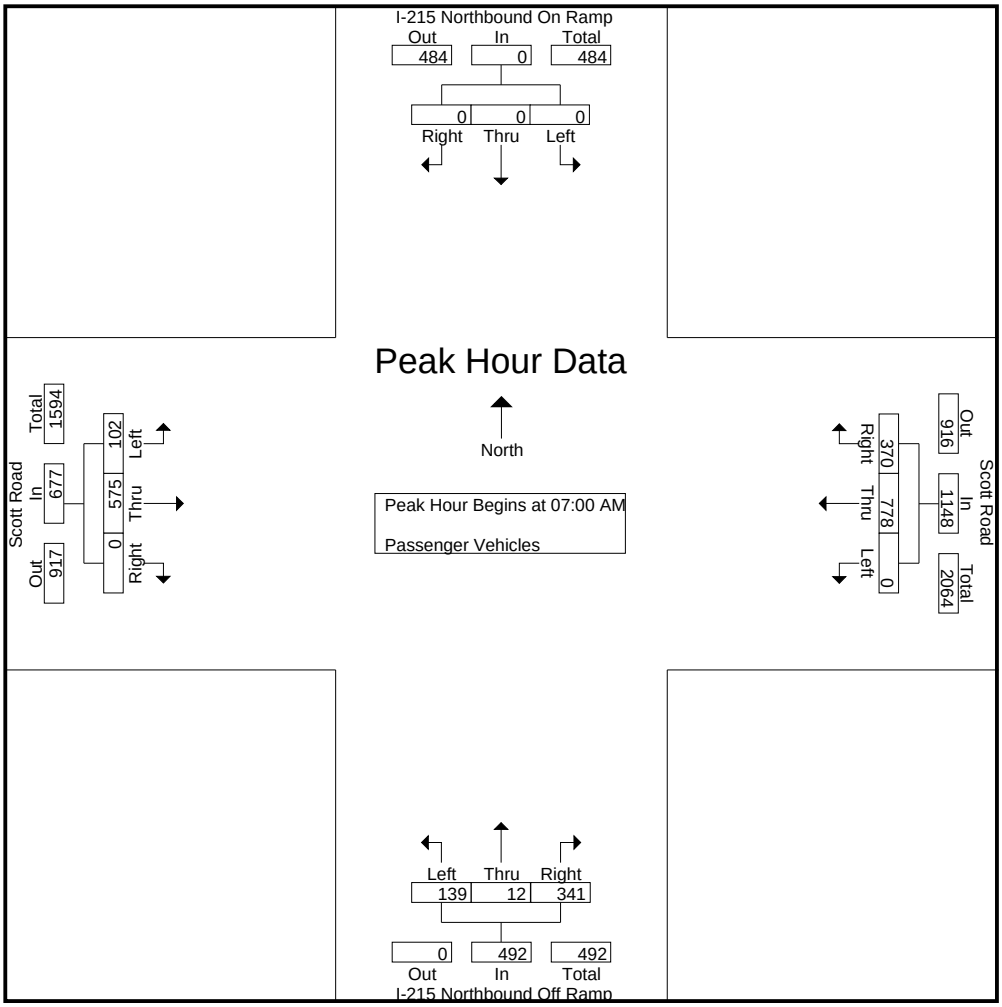

Peak Hour Analysis From 07:00 AM to 07:45 AM - Peak 1 of 1

Peak Hour for Each Approach Begins at:

	07:00 AM				07:00 AM				07:00 AM				07:00 AM			
+0 mins.	0	0	0	0	0	175	**104**	279	29	**9**	67	105	26	96	0	122
+15 mins.	0	0	0	0	0	191	103	294	**48**	2	80	130	24	154	0	178
+30 mins.	0	0	0	0	0	**225**	73	**298**	33	0	89	122	**28**	**167**	0	**195**
+45 mins.	0	0	0	0	0	187	90	277	29	1	**105**	**135**	24	158	0	182
Total Volume	0	0	0	0	0	778	370	1148	139	12	341	492	102	575	0	677
% App. Total	0	0	0		0	67.8	32.2		28.3	2.4	69.3		15.1	84.9	0	
PHF	.000	.000	.000	.000	.000	.864	.889	.963	.724	.333	.812	.911	.911	.861	.000	.868

Counts Unlimited Inc.
PO Box 1178
Corona, CA 92878
(951) 268-6268

City of Menifee
N/S: I-215 Northbound Ramps
E/W: Scott Road
Weather: Sunny

File Name : MEN215NSCAM
Site Code : 10209063
Start Date : 10/13/2010
Page No : 1

Groups Printed- Large 2 Axle Vehicles

	I-215 Northbound On Ramp Southbound				Scott Road Westbound				I-215 Northbound Off Ramp Northbound				Scott Road Eastbound				
Start Time	Left	Thru	Right	App. Total	Left	Thru	Right	App. Total	Left	Thru	Right	App. Total	Left	Thru	Right	App. Total	Int. Total
06:00 AM	0	0	0	0	0	3	1	4	1	0	1	2	3	1	0	4	10
06:15 AM	0	0	0	0	0	1	3	4	0	0	1	1	1	6	0	7	12
06:30 AM	0	0	0	0	0	3	1	4	1	0	3	4	0	7	0	7	15
06:45 AM	0	0	0	0	0	2	2	4	0	0	2	2	2	6	0	8	14
Total	0	0	0	0	0	9	7	16	2	0	7	9	6	20	0	26	51
07:00 AM	0	0	0	0	0	4	4	8	0	0	2	2	1	2	0	3	13
07:15 AM	0	0	0	0	0	2	2	4	2	0	0	2	2	8	0	10	16
07:30 AM	0	0	0	0	0	1	1	2	2	0	0	2	3	9	0	12	16
07:45 AM	0	0	0	0	0	5	1	6	0	0	0	0	0	0	0	0	6
Total	0	0	0	0	0	12	8	20	4	0	2	6	6	19	0	25	51
08:00 AM	0	0	0	0	0	3	2	5	1	0	0	1	1	8	0	9	15
08:15 AM	0	0	0	0	0	4	2	6	4	0	2	6	0	3	0	3	15
08:30 AM	0	0	0	0	0	6	3	9	1	0	0	1	1	6	0	7	17
08:45 AM	0	0	0	0	0	13	1	14	2	0	1	3	0	1	0	1	18
Total	0	0	0	0	0	26	8	34	8	0	3	11	2	18	0	20	65
Grand Total	0	0	0	0	0	47	23	70	14	0	12	26	14	57	0	71	167
Apprch %	0	0	0		0	67.1	32.9		53.8	0	46.2		19.7	80.3	0		
Total %	0	0	0	0	0	28.1	13.8	41.9	8.4	0	7.2	15.6	8.4	34.1	0	42.5	

	I-215 Northbound On Ramp Southbound				Scott Road Westbound				I-215 Northbound Off Ramp Northbound				Scott Road Eastbound				
Start Time	Left	Thru	Right	App. Total	Left	Thru	Right	App. Total	Left	Thru	Right	App. Total	Left	Thru	Right	App. Total	Int. Total
Peak Hour Analysis From 07:00 AM to 07:45 AM - Peak 1 of 1																	
Peak Hour for Entire Intersection Begins at 07:00 AM																	
07:00 AM	0	0	0	0	0	4	**4**	**8**	0	0	**2**	**2**	1	2	0	3	13
07:15 AM	0	0	0	0	0	2	2	4	**2**	0	0	2	2	8	0	10	**16**
07:30 AM	0	0	0	0	0	1	1	2	2	0	0	2	**3**	**9**	0	**12**	16
07:45 AM	0	0	0	0	0	**5**	1	6	0	0	0	0	0	0	0	0	6
Total Volume	0	0	0	0	0	12	8	20	4	0	2	6	6	19	0	25	51
% App. Total	0	0	0		0	60	40		66.7	0	33.3		24	76	0		
PHF	.000	.000	.000	.000	.000	.600	.500	.625	.500	.000	.250	.750	.500	.528	.000	.521	.797

Counts Unlimited Inc.
PO Box 1178
Corona, CA 92878
(951) 268-6268

City of Menifee
N/S: I-215 Northbound Ramps
E/W: Scott Road
Weather: Sunny

File Name : MEN215NSCAM
Site Code : 10209063
Start Date : 10/13/2010
Page No : 2

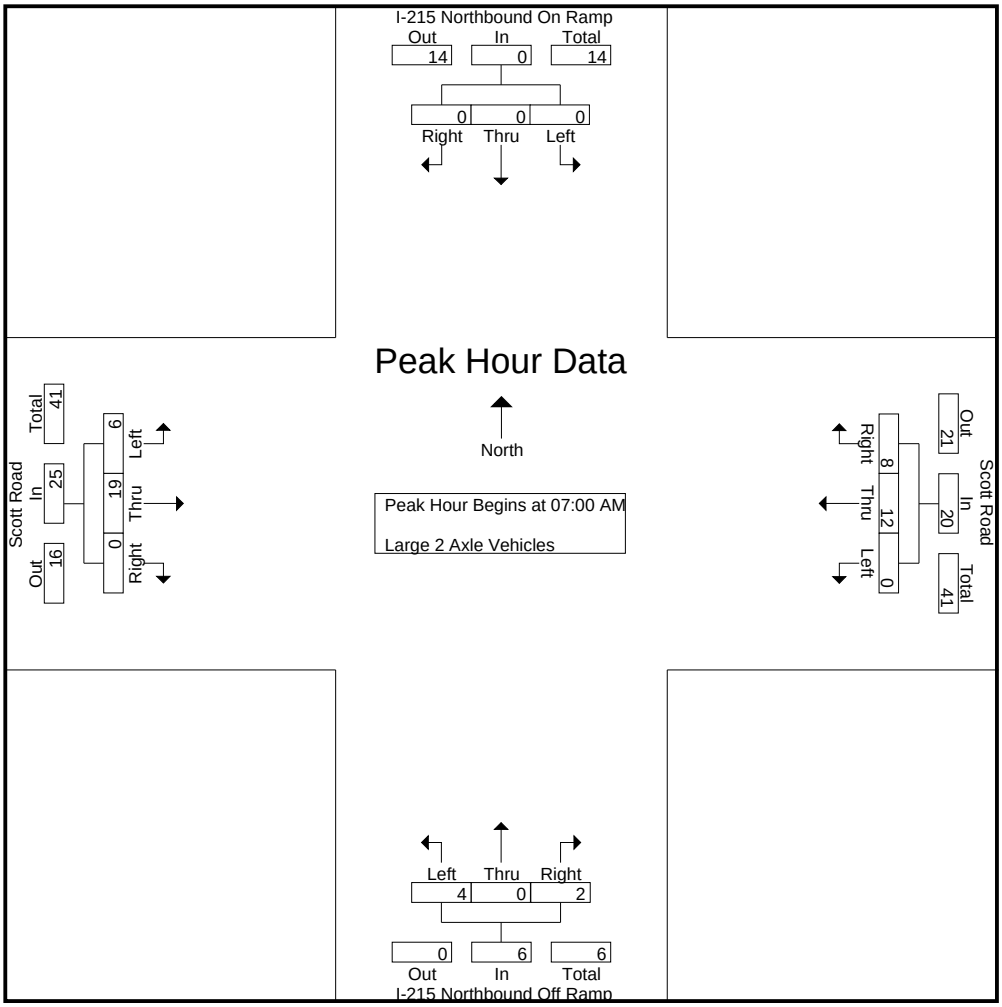

Peak Hour Analysis From 07:00 AM to 07:45 AM - Peak 1 of 1

Peak Hour for Each Approach Begins at:

	07:00 AM				07:00 AM				07:00 AM				07:00 AM			
+0 mins.	0	0	0	0	0	4	**4**	**8**	0	0	**2**	**2**	1	2	0	3
+15 mins.	0	0	0	0	0	2	2	4	**2**	0	0	2	2	8	0	10
+30 mins.	0	0	0	0	0	1	1	2	2	0	0	2	**3**	**9**	0	**12**
+45 mins.	0	0	0	0	0	**5**	1	6	0	0	0	0	0	0	0	0
Total Volume	0	0	0	0	0	12	8	20	4	0	2	6	6	19	0	25
% App. Total	0	0	0		0	60	40		66.7	0	33.3		24	76	0	
PHF	.000	.000	.000	.000	.000	.600	.500	.625	.500	.000	.250	.750	.500	.528	.000	.521

Counts Unlimited Inc.
PO Box 1178
Corona, CA 92878
(951) 268-6268

City of Menifee
N/S: I-215 Northbound Ramps
E/W: Scott Road
Weather: Sunny

File Name : MEN215NSCAM
Site Code : 10209063
Start Date : 10/13/2010
Page No : 1

Groups Printed- 3 Axle Vehicles

	I-215 Northbound On Ramp Southbound				Scott Road Westbound				I-215 Northbound Off Ramp Northbound				Scott Road Eastbound				
Start Time	Left	Thru	Right	App. Total	Left	Thru	Right	App. Total	Left	Thru	Right	App. Total	Left	Thru	Right	App. Total	Int. Total
06:00 AM	0	0	0	0	0	1	0	1	0	0	0	0	0	2	0	2	3
06:15 AM	0	0	0	0	0	0	0	0	0	0	0	0	0	2	0	2	2
06:30 AM	0	0	0	0	0	0	0	0	0	0	0	0	2	0	0	2	2
06:45 AM	0	0	0	0	0	0	0	0	0	0	0	0	0	0	0	0	0
Total	0	0	0	0	0	1	0	1	0	0	0	0	2	4	0	6	7
07:00 AM	0	0	0	0	0	0	0	0	0	0	1	1	0	1	0	1	2
07:15 AM	0	0	0	0	0	0	0	0	0	0	2	2	0	1	0	1	3
07:30 AM	0	0	0	0	0	0	0	0	1	0	0	1	0	0	0	0	1
07:45 AM	0	0	0	0	0	0	0	0	0	0	0	0	0	0	0	0	0
Total	0	0	0	0	0	0	0	0	1	0	3	4	0	2	0	2	6
08:00 AM	0	0	0	0	0	0	0	0	0	0	0	0	0	0	0	0	0
08:15 AM	0	0	0	0	0	3	0	3	0	0	0	0	0	1	0	1	4
08:30 AM	0	0	0	0	0	1	0	1	0	0	0	0	0	0	0	0	1
08:45 AM	0	0	0	0	0	0	0	0	0	0	0	0	0	0	0	0	0
Total	0	0	0	0	0	4	0	4	0	0	0	0	0	1	0	1	5
Grand Total	0	0	0	0	0	5	0	5	1	0	3	4	2	7	0	9	18
Apprch %	0	0	0		0	100	0		25	0	75		22.2	77.8	0		
Total %	0	0	0	0	0	27.8	0	27.8	5.6	0	16.7	22.2	11.1	38.9	0	50	

	I-215 Northbound On Ramp Southbound				Scott Road Westbound				I-215 Northbound Off Ramp Northbound				Scott Road Eastbound				
Start Time	Left	Thru	Right	App. Total	Left	Thru	Right	App. Total	Left	Thru	Right	App. Total	Left	Thru	Right	App. Total	Int. Total
Peak Hour Analysis From 07:00 AM to 07:45 AM - Peak 1 of 1																	
Peak Hour for Entire Intersection Begins at 07:00 AM																	
07:00 AM	0	0	0	0	0	0	0	0	0	0	1	1	0	**1**	0	**1**	2
07:15 AM	0	0	0	0	0	0	0	0	0	0	**2**	**2**	0	1	0	1	**3**
07:30 AM	0	0	0	0	0	0	0	0	**1**	0	0	1	0	0	0	0	1
07:45 AM	0	0	0	0	0	0	0	0	0	0	0	0	0	0	0	0	0
Total Volume	0	0	0	0	0	0	0	0	1	0	3	4	0	2	0	2	6
% App. Total	0	0	0		0	0	0		25	0	75		0	100	0		
PHF	.000	.000	.000	.000	.000	.000	.000	.000	.250	.000	.375	.500	.000	.500	.000	.500	.500

Counts Unlimited Inc.
PO Box 1178
Corona, CA 92878
(951) 268-6268

City of Menifee
N/S: I-215 Northbound Ramps
E/W: Scott Road
Weather: Sunny

File Name : MEN215NSCAM
Site Code : 10209063
Start Date : 10/13/2010
Page No : 2

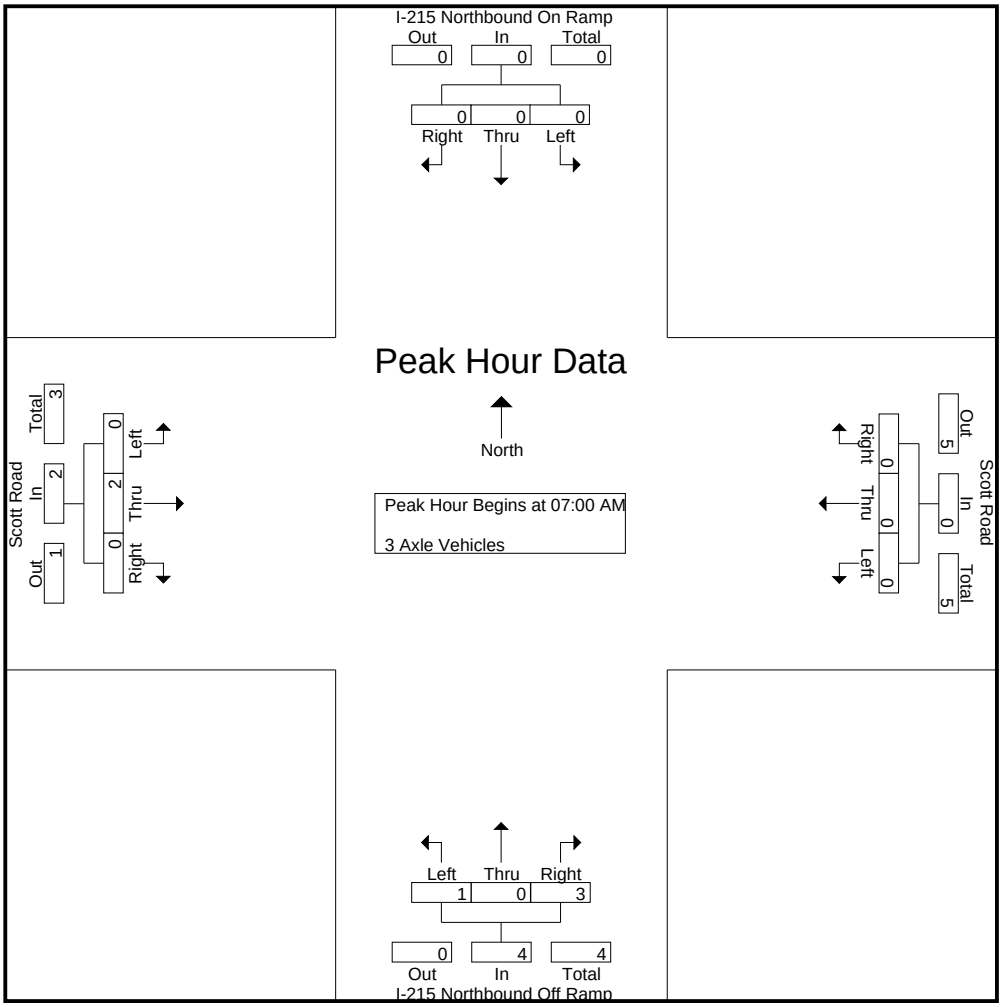

Peak Hour Analysis From 07:00 AM to 07:45 AM - Peak 1 of 1

Peak Hour for Each Approach Begins at:

	07:00 AM				07:00 AM				07:00 AM				07:00 AM			
+0 mins.	0	0	0	0	0	0	0	0	0	0	1	1	0	**1**	0	**1**
+15 mins.	0	0	0	0	0	0	0	0	0	0	**2**	**2**	0	1	0	1
+30 mins.	0	0	0	0	0	0	0	0	**1**	0	0	1	0	0	0	0
+45 mins.	0	0	0	0	0	0	0	0	0	0	0	0	0	0	0	0
Total Volume	0	0	0	0	0	0	0	0	1	0	3	4	0	2	0	2
% App. Total	0	0	0		0	0	0		25	0	75		0	100	0	
PHF	.000	.000	.000	.000	.000	.000	.000	.000	.250	.000	.375	.500	.000	.500	.000	.500

Counts Unlimited Inc.
PO Box 1178
Corona, CA 92878
(951) 268-6268

City of Menifee
N/S: I-215 Northbound Ramps
E/W: Scott Road
Weather: Sunny

File Name : MEN215NSCAM
Site Code : 10209063
Start Date : 10/13/2010
Page No : 1

Groups Printed- 4+ Axle Trucks

	I-215 Northbound On Ramp Southbound				Scott Road Westbound				I-215 Northbound Off Ramp Northbound				Scott Road Eastbound				
Start Time	Left	Thru	Right	App. Total	Left	Thru	Right	App. Total	Left	Thru	Right	App. Total	Left	Thru	Right	App. Total	Int. Total
06:00 AM	0	0	0	0	0	0	1	1	0	0	0	0	1	0	0	1	2
06:15 AM	0	0	0	0	0	1	0	1	0	0	1	1	1	3	0	4	6
06:30 AM	0	0	0	0	0	0	0	0	0	0	1	1	0	0	0	0	1
06:45 AM	0	0	0	0	0	1	0	1	0	0	1	1	1	1	0	2	4
Total	0	0	0	0	0	2	1	3	0	0	3	3	3	4	0	7	13
07:00 AM	0	0	0	0	0	0	1	1	1	0	0	1	0	1	0	1	3
07:15 AM	0	0	0	0	0	0	0	0	0	0	2	2	0	4	0	4	6
07:30 AM	0	0	0	0	0	0	1	1	0	0	1	1	0	0	0	0	2
07:45 AM	0	0	0	0	0	2	0	2	0	0	0	0	0	2	0	2	4
Total	0	0	0	0	0	2	2	4	1	0	3	4	0	7	0	7	15
08:00 AM	0	0	0	0	0	2	0	2	0	0	0	0	0	2	0	2	4
08:15 AM	0	0	0	0	0	1	0	1	0	0	0	0	0	0	0	0	1
08:30 AM	0	0	0	0	0	3	2	5	0	0	0	0	2	1	0	3	8
08:45 AM	0	0	0	0	0	1	0	1	0	0	0	0	0	1	0	1	2
Total	0	0	0	0	0	7	2	9	0	0	0	0	2	4	0	6	15
Grand Total	0	0	0	0	0	11	5	16	1	0	6	7	5	15	0	20	43
Apprch %	0	0	0		0	68.8	31.2		14.3	0	85.7		25	75	0		
Total %	0	0	0	0	0	25.6	11.6	37.2	2.3	0	14	16.3	11.6	34.9	0	46.5	

	I-215 Northbound On Ramp Southbound				Scott Road Westbound				I-215 Northbound Off Ramp Northbound				Scott Road Eastbound				
Start Time	Left	Thru	Right	App. Total	Left	Thru	Right	App. Total	Left	Thru	Right	App. Total	Left	Thru	Right	App. Total	Int. Total
Peak Hour Analysis From 07:00 AM to 07:45 AM - Peak 1 of 1																	
Peak Hour for Entire Intersection Begins at 07:00 AM																	
07:00 AM	0	0	0	0	0	0	**1**	1	**1**	0	0	1	0	1	0	1	3
07:15 AM	0	0	0	0	0	0	0	0	0	0	**2**	**2**	0	**4**	0	**4**	**6**
07:30 AM	0	0	0	0	0	0	1	1	0	0	1	1	0	0	0	0	2
07:45 AM	0	0	0	0	0	**2**	0	**2**	0	0	0	0	0	2	0	2	4
Total Volume	0	0	0	0	0	2	2	4	1	0	3	4	0	7	0	7	15
% App. Total	0	0	0		0	50	50		25	0	75		0	100	0		
PHF	.000	.000	.000	.000	.000	.250	.500	.500	.250	.000	.375	.500	.000	.438	.000	.438	.625

Counts Unlimited Inc.
PO Box 1178
Corona, CA 92878
(951) 268-6268

City of Menifee
N/S: I-215 Northbound Ramps
E/W: Scott Road
Weather: Sunny

File Name : MEN215NSCAM
Site Code : 10209063
Start Date : 10/13/2010
Page No : 2

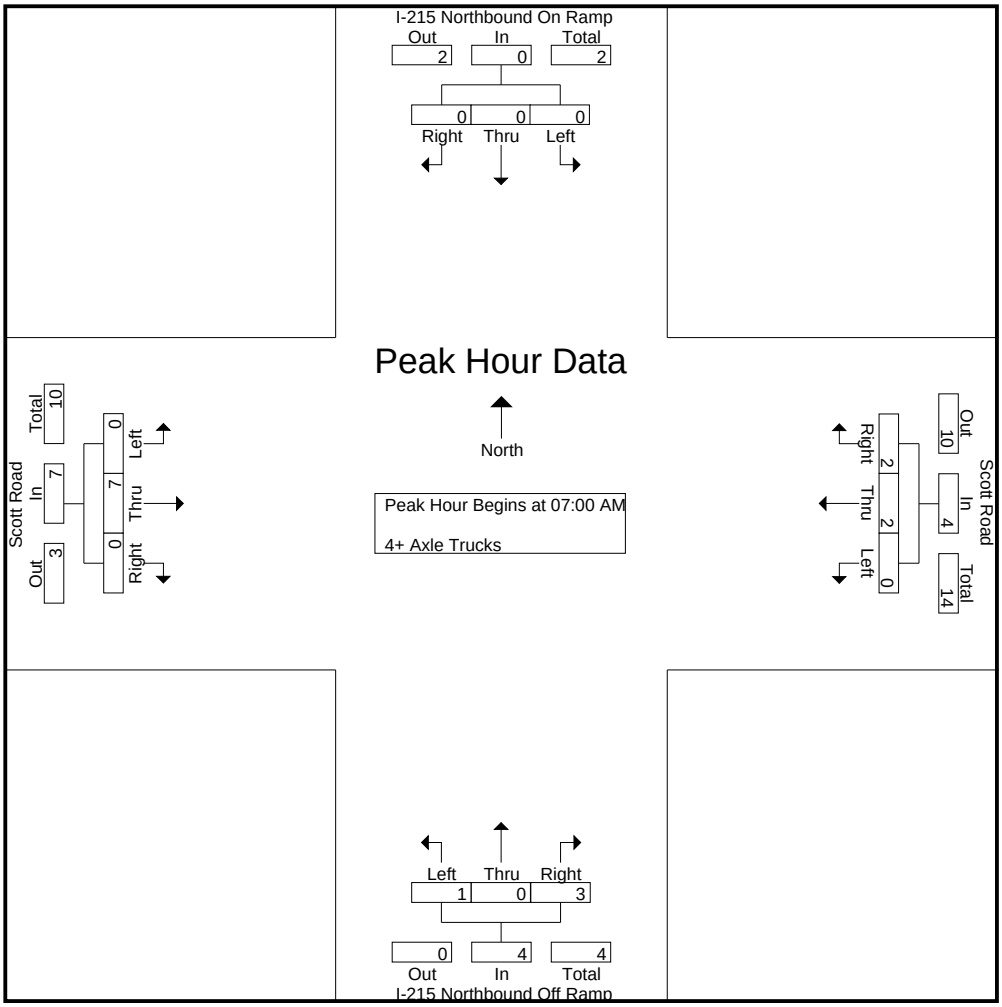

Peak Hour Analysis From 07:00 AM to 07:45 AM - Peak 1 of 1

Peak Hour for Each Approach Begins at:

	07:00 AM				07:00 AM				07:00 AM				07:00 AM			
+0 mins.	0	0	0	0	0	0	**1**	1	**1**	0	0	1	0	1	0	1
+15 mins.	0	0	0	0	0	0	0	0	0	0	**2**	**2**	0	**4**	0	**4**
+30 mins.	0	0	0	0	0	0	1	1	0	0	1	1	0	0	0	0
+45 mins.	0	0	0	0	0	**2**	0	**2**	0	0	0	0	0	2	0	2
Total Volume	0	0	0	0	0	2	2	4	1	0	3	4	0	7	0	7
% App. Total	0	0	0		0	50	50		25	0	75		0	100	0	
PHF	.000	.000	.000	.000	.000	.250	.500	.500	.250	.000	.375	.500	.000	.438	.000	.438

Counts Unlimited Inc.
PO Box 1178
Corona, CA 92878
(951) 268-6268

City of Menifee
N/S: I-215 Northbound Ramps
E/W: Scott Road
Weather: Sunny

File Name : MEN215NSCPM
Site Code : 10209063
Start Date : 10/13/2010
Page No : 1

Groups Printed- Passenger Vehicles - Large 2 Axle Vehicles - 3 Axle Vehicles - 4+ Axle Trucks

	I-215 Northbound On Ramp Southbound				Scott Road Westbound				I-215 Northbound Off Ramp Northbound				Scott Road Eastbound				
Start Time	Left	Thru	Right	App. Total	Left	Thru	Right	App. Total	Left	Thru	Right	App. Total	Left	Thru	Right	App. Total	Int. Total
04:00 PM	0	0	0	0	0	215	79	294	55	0	107	162	20	179	0	199	655
04:15 PM	0	0	0	0	0	188	68	256	63	1	105	169	27	194	0	221	646
04:30 PM	0	0	0	0	0	198	88	286	67	0	94	161	28	173	0	201	648
04:45 PM	0	0	0	0	0	240	91	331	45	3	123	171	20	193	0	213	715
Total	0	0	0	0	0	841	326	1167	230	4	429	663	95	739	0	834	2664
05:00 PM	0	0	0	0	0	242	94	336	39	0	87	126	40	192	0	232	694
05:15 PM	0	0	0	0	0	210	88	298	47	0	132	179	26	210	0	236	713
05:30 PM	0	0	0	0	0	221	91	312	51	3	126	180	26	185	0	211	703
05:45 PM	0	0	0	0	0	205	75	280	43	1	120	164	24	208	0	232	676
Total	0	0	0	0	0	878	348	1226	180	4	465	649	116	795	0	911	2786
06:00 PM	0	0	0	0	0	199	73	272	57	1	133	191	20	205	0	225	688
06:15 PM	0	0	0	0	0	182	63	245	45	2	135	182	13	207	0	220	647
06:30 PM	0	0	0	0	0	184	75	259	36	0	138	174	21	218	0	239	672
06:45 PM	0	0	0	0	0	160	63	223	33	3	119	155	14	196	0	210	588
Total	0	0	0	0	0	725	274	999	171	6	525	702	68	826	0	894	2595
Grand Total	0	0	0	0	0	2444	948	3392	581	14	1419	2014	279	2360	0	2639	8045
Apprch %	0	0	0		0	72.1	27.9		28.8	0.7	70.5		10.6	89.4	0		
Total %	0	0	0	0	0	30.4	11.8	42.2	7.2	0.2	17.6	25	3.5	29.3	0	32.8	
Passenger Vehicles	0	0	0	0	0	2409	925	3334	563	13	1403	1979	268	2334	0	2602	7915
% Passenger Vehicles	0	0	0	0	0	98.6	97.6	98.3	96.9	92.9	98.9	98.3	96.1	98.9	0	98.6	98.4
Large 2 Axle Vehicles	0	0	0	0	0	29	16	45	15	1	12	28	7	19	0	26	99
% Large 2 Axle Vehicles	0	0	0	0	0	1.2	1.7	1.3	2.6	7.1	0.8	1.4	2.5	0.8	0	1	1.2
3 Axle Vehicles	0	0	0	0	0	3	2	5	0	0	0	0	2	0	0	2	7
% 3 Axle Vehicles	0	0	0	0	0	0.1	0.2	0.1	0	0	0	0	0.7	0	0	0.1	0.1
4+ Axle Trucks	0	0	0	0	0	3	5	8	3	0	4	7	2	7	0	9	24
% 4+ Axle Trucks	0	0	0	0	0	0.1	0.5	0.2	0.5	0	0.3	0.3	0.7	0.3	0	0.3	0.3

	I-215 Northbound On Ramp Southbound				Scott Road Westbound				I-215 Northbound Off Ramp Northbound				Scott Road Eastbound				
Start Time	Left	Thru	Right	App. Total	Left	Thru	Right	App. Total	Left	Thru	Right	App. Total	Left	Thru	Right	App. Total	Int. Total
Peak Hour Analysis From 04:00 PM to 06:45 PM - Peak 1 of 1																	
Peak Hour for Entire Intersection Begins at 04:45 PM																	
04:45 PM	0	0	0	0	0	240	91	331	45	**3**	123	171	20	193	0	213	**715**
05:00 PM	0	0	0	0	0	**242**	**94**	**336**	39	0	87	126	**40**	192	0	232	694
05:15 PM	0	0	0	0	0	210	88	298	47	0	**132**	179	26	**210**	0	**236**	713
05:30 PM	0	0	0	0	0	221	91	312	**51**	3	126	**180**	26	185	0	211	703
Total Volume	0	0	0	0	0	913	364	1277	182	6	468	656	112	780	0	892	2825
% App. Total	0	0	0		0	71.5	28.5		27.7	0.9	71.3		12.6	87.4	0		
PHF	.000	.000	.000	.000	.000	.943	.968	.950	.892	.500	.886	.911	.700	.929	.000	.945	.988

Counts Unlimited Inc.
PO Box 1178
Corona, CA 92878
(951) 268-6268

City of Menifee
N/S: I-215 Northbound Ramps
E/W: Scott Road
Weather: Sunny

File Name : MEN215NSCPM
Site Code : 10209063
Start Date : 10/13/2010
Page No : 2

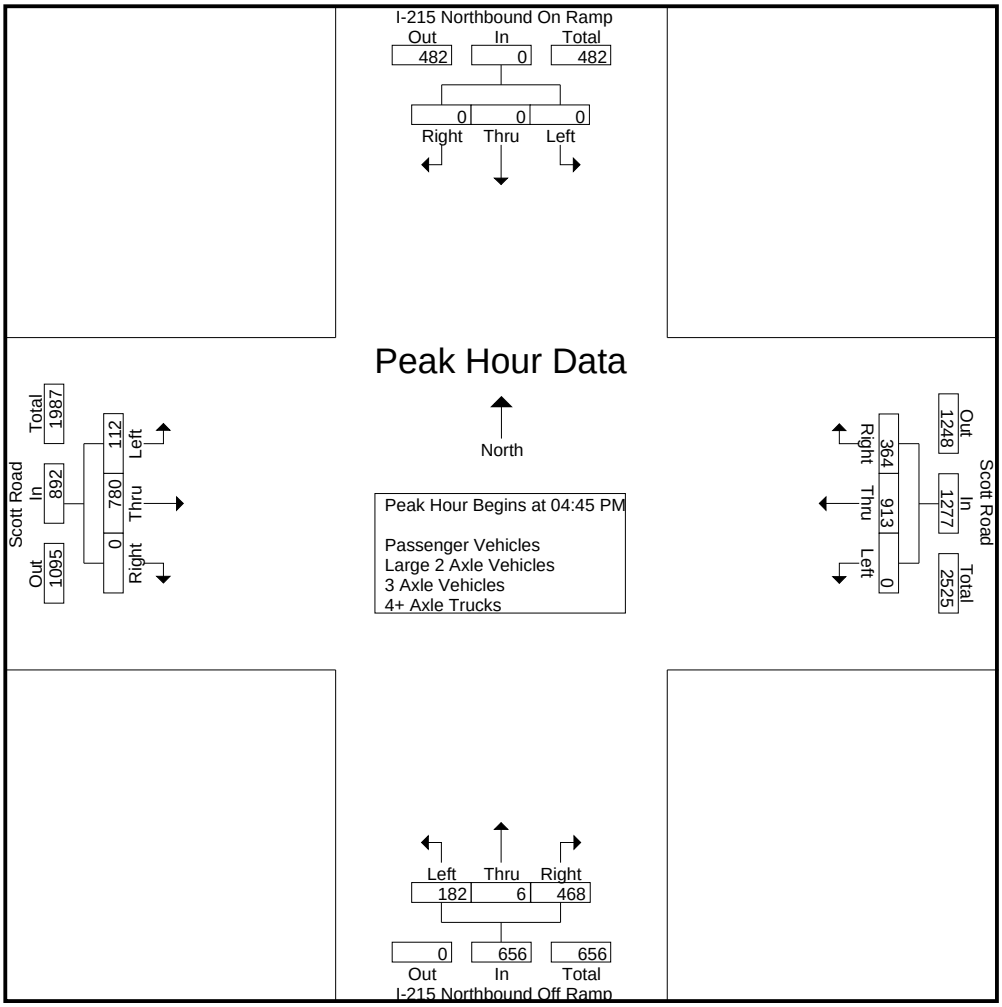

Peak Hour Analysis From 04:00 PM to 06:45 PM - Peak 1 of 1

Peak Hour for Each Approach Begins at:

	04:00 PM				04:45 PM				05:30 PM				05:45 PM			
+0 mins.	0	0	0	0	0	240	91	331	51	**3**	126	180	**24**	208	0	232
+15 mins.	0	0	0	0	0	**242**	**94**	**336**	43	1	120	164	20	205	0	225
+30 mins.	0	0	0	0	0	210	88	298	**57**	1	133	**191**	13	207	0	220
+45 mins.	0	0	0	0	0	221	91	312	45	2	**135**	182	21	**218**	0	**239**
Total Volume	0	0	0	0	0	913	364	1277	196	7	514	717	78	838	0	916
% App. Total	0	0	0		0	71.5	28.5		27.3	1	71.7		8.5	91.5	0	
PHF	.000	.000	.000	.000	.000	.943	.968	.950	.860	.583	.952	.938	.813	.961	.000	.958

Counts Unlimited Inc.
PO Box 1178
Corona, CA 92878
(951) 268-6268

City of Menifee
N/S: I-215 Northbound Ramps
E/W: Scott Road
Weather: Sunny

File Name : MEN215NSCPM
Site Code : 10209063
Start Date : 10/13/2010
Page No : 1

Groups Printed- Passenger Vehicles

	I-215 Northbound On Ramp Southbound				Scott Road Westbound				I-215 Northbound Off Ramp Northbound				Scott Road Eastbound				
Start Time	Left	Thru	Right	App. Total	Left	Thru	Right	App. Total	Left	Thru	Right	App. Total	Left	Thru	Right	App. Total	Int. Total
04:00 PM	0	0	0	0	0	210	79	289	52	0	106	158	19	178	0	197	644
04:15 PM	0	0	0	0	0	183	66	249	60	1	104	165	25	191	0	216	630
04:30 PM	0	0	0	0	0	198	87	285	62	0	93	155	27	173	0	200	640
04:45 PM	0	0	0	0	0	236	89	325	44	3	121	168	20	191	0	211	704
Total	0	0	0	0	0	827	321	1148	218	4	424	646	91	733	0	824	2618
05:00 PM	0	0	0	0	0	241	91	332	37	0	87	124	39	191	0	230	686
05:15 PM	0	0	0	0	0	207	84	291	45	0	130	175	24	207	0	231	697
05:30 PM	0	0	0	0	0	213	88	301	49	2	125	176	24	184	0	208	685
05:45 PM	0	0	0	0	0	203	74	277	43	1	117	161	23	205	0	228	666
Total	0	0	0	0	0	864	337	1201	174	3	459	636	110	787	0	897	2734
06:00 PM	0	0	0	0	0	195	71	266	57	1	131	189	19	203	0	222	677
06:15 PM	0	0	0	0	0	181	62	243	45	2	135	182	13	206	0	219	644
06:30 PM	0	0	0	0	0	182	71	253	36	0	136	172	21	215	0	236	661
06:45 PM	0	0	0	0	0	160	63	223	33	3	118	154	14	190	0	204	581
Total	0	0	0	0	0	718	267	985	171	6	520	697	67	814	0	881	2563
Grand Total	0	0	0	0	0	2409	925	3334	563	13	1403	1979	268	2334	0	2602	7915
Apprch %	0	0	0		0	72.3	27.7		28.4	0.7	70.9		10.3	89.7	0		
Total %	0	0	0	0	0	30.4	11.7	42.1	7.1	0.2	17.7	25	3.4	29.5	0	32.9	

	I-215 Northbound On Ramp Southbound				Scott Road Westbound				I-215 Northbound Off Ramp Northbound				Scott Road Eastbound				
Start Time	Left	Thru	Right	App. Total	Left	Thru	Right	App. Total	Left	Thru	Right	App. Total	Left	Thru	Right	App. Total	Int. Total
Peak Hour Analysis From 04:45 PM to 05:30 PM - Peak 1 of 1																	
Peak Hour for Entire Intersection Begins at 04:45 PM																	
04:45 PM	0	0	0	0	0	236	89	325	44	**3**	121	168	20	191	0	211	**704**
05:00 PM	0	0	0	0	0	**241**	**91**	**332**	37	0	87	124	**39**	191	0	230	686
05:15 PM	0	0	0	0	0	207	84	291	45	0	**130**	175	24	**207**	0	**231**	697
05:30 PM	0	0	0	0	0	213	88	301	**49**	2	125	**176**	24	184	0	208	685
Total Volume	0	0	0	0	0	897	352	1249	175	5	463	643	107	773	0	880	2772
% App. Total	0	0	0		0	71.8	28.2		27.2	0.8	72		12.2	87.8	0		
PHF	.000	.000	.000	.000	.000	.930	.967	.941	.893	.417	.890	.913	.686	.934	.000	.952	.984

Counts Unlimited Inc.
PO Box 1178
Corona, CA 92878
(951) 268-6268

City of Menifee
N/S: I-215 Northbound Ramps
E/W: Scott Road
Weather: Sunny

File Name : MEN215NSCPM
Site Code : 10209063
Start Date : 10/13/2010
Page No : 2

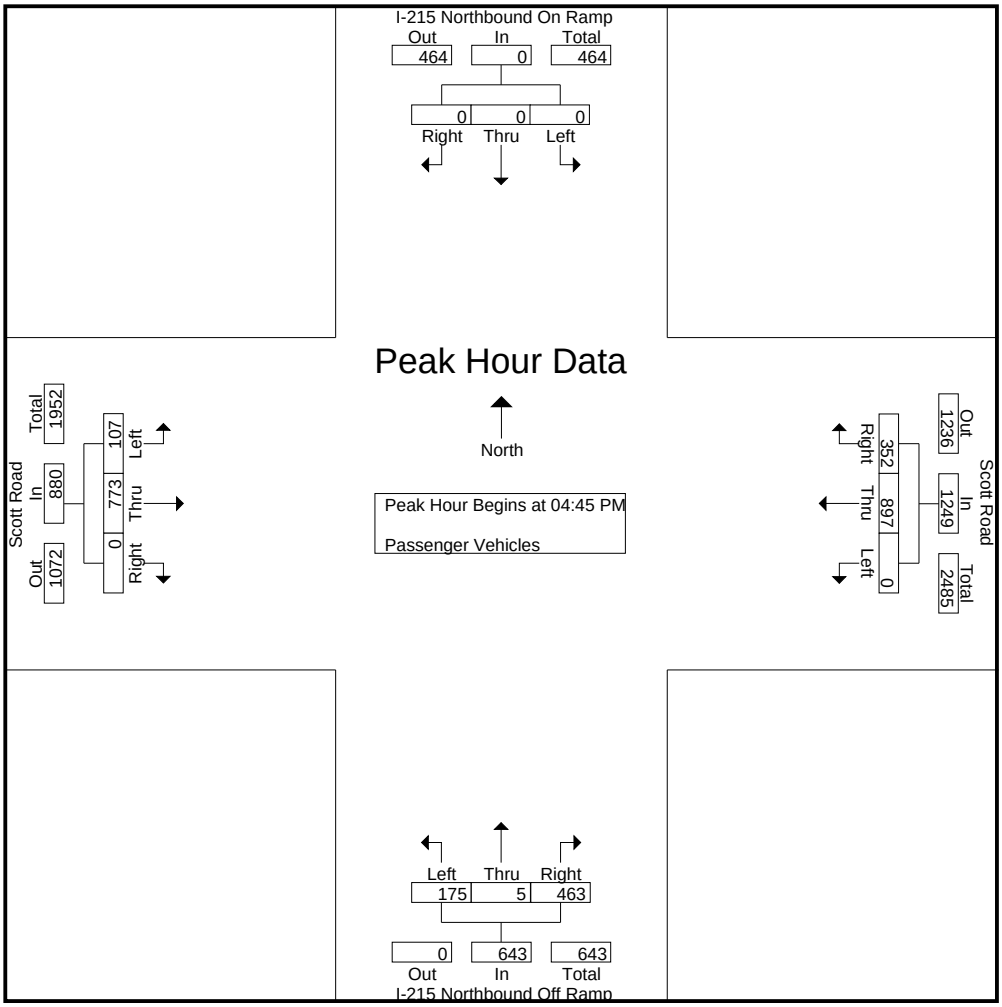

Peak Hour Analysis From 04:45 PM to 05:30 PM - Peak 1 of 1

Peak Hour for Each Approach Begins at:

	04:45 PM				04:45 PM				04:45 PM				04:45 PM			
+0 mins.	0	0	0	0	0	236	89	325	44	**3**	121	168	20	191	0	211
+15 mins.	0	0	0	0	0	**241**	**91**	**332**	37	0	87	124	**39**	191	0	230
+30 mins.	0	0	0	0	0	207	84	291	45	0	**130**	175	24	**207**	0	**231**
+45 mins.	0	0	0	0	0	213	88	301	**49**	2	125	**176**	24	184	0	208
Total Volume	0	0	0	0	0	897	352	1249	175	5	463	643	107	773	0	880
% App. Total	0	0	0		0	71.8	28.2		27.2	0.8	72		12.2	87.8	0	
PHF	.000	.000	.000	.000	.000	.930	.967	.941	.893	.417	.890	.913	.686	.934	.000	.952

Counts Unlimited Inc.
PO Box 1178
Corona, CA 92878
(951) 268-6268

City of Menifee
N/S: I-215 Northbound Ramps
E/W: Scott Road
Weather: Sunny

File Name : MEN215NSCPM
Site Code : 10209063
Start Date : 10/13/2010
Page No : 1

Groups Printed- Large 2 Axle Vehicles

	I-215 Northbound On Ramp Southbound				Scott Road Westbound				I-215 Northbound Off Ramp Northbound				Scott Road Eastbound				
Start Time	Left	Thru	Right	App. Total	Left	Thru	Right	App. Total	Left	Thru	Right	App. Total	Left	Thru	Right	App. Total	Int. Total
04:00 PM	0	0	0	0	0	5	0	5	2	0	1	3	0	0	0	0	8
04:15 PM	0	0	0	0	0	5	2	7	2	0	1	3	1	3	0	4	14
04:30 PM	0	0	0	0	0	0	0	0	5	0	1	6	1	0	0	1	7
04:45 PM	0	0	0	0	0	4	1	5	1	0	2	3	0	2	0	2	10
Total	0	0	0	0	0	14	3	17	10	0	5	15	2	5	0	7	39
05:00 PM	0	0	0	0	0	1	3	4	2	0	0	2	1	1	0	2	8
05:15 PM	0	0	0	0	0	3	2	5	1	0	1	2	2	3	0	5	12
05:30 PM	0	0	0	0	0	6	2	8	2	1	1	4	1	1	0	2	14
05:45 PM	0	0	0	0	0	1	0	1	0	0	2	2	0	1	0	1	4
Total	0	0	0	0	0	11	7	18	5	1	4	10	4	6	0	10	38
06:00 PM	0	0	0	0	0	3	2	5	0	0	1	1	1	2	0	3	9
06:15 PM	0	0	0	0	0	1	1	2	0	0	0	0	0	1	0	1	3
06:30 PM	0	0	0	0	0	0	3	3	0	0	2	2	0	2	0	2	7
06:45 PM	0	0	0	0	0	0	0	0	0	0	0	0	0	3	0	3	3
Total	0	0	0	0	0	4	6	10	0	0	3	3	1	8	0	9	22
Grand Total	0	0	0	0	0	29	16	45	15	1	12	28	7	19	0	26	99
Apprch %	0	0	0		0	64.4	35.6		53.6	3.6	42.9		26.9	73.1	0		
Total %	0	0	0	0	0	29.3	16.2	45.5	15.2	1	12.1	28.3	7.1	19.2	0	26.3	

	I-215 Northbound On Ramp Southbound				Scott Road Westbound				I-215 Northbound Off Ramp Northbound				Scott Road Eastbound				
Start Time	Left	Thru	Right	App. Total	Left	Thru	Right	App. Total	Left	Thru	Right	App. Total	Left	Thru	Right	App. Total	Int. Total
Peak Hour Analysis From 04:45 PM to 05:30 PM - Peak 1 of 1																	
Peak Hour for Entire Intersection Begins at 04:45 PM																	
04:45 PM	0	0	0	0	0	4	1	5	1	0	**2**	3	0	2	0	2	10
05:00 PM	0	0	0	0	0	1	**3**	4	**2**	0	0	2	1	1	0	2	8
05:15 PM	0	0	0	0	0	3	2	5	1	0	1	2	**2**	**3**	0	**5**	12
05:30 PM	0	0	0	0	0	**6**	2	**8**	2	**1**	1	**4**	1	1	0	2	**14**
Total Volume	0	0	0	0	0	14	8	22	6	1	4	11	4	7	0	11	44
% App. Total	0	0	0		0	63.6	36.4		54.5	9.1	36.4		36.4	63.6	0		
PHF	.000	.000	.000	.000	.000	.583	.667	.688	.750	.250	.500	.688	.500	.583	.000	.550	.786

Counts Unlimited Inc.
PO Box 1178
Corona, CA 92878
(951) 268-6268

City of Menifee
N/S: I-215 Northbound Ramps
E/W: Scott Road
Weather: Sunny

File Name : MEN215NSCPM
Site Code : 10209063
Start Date : 10/13/2010
Page No : 2

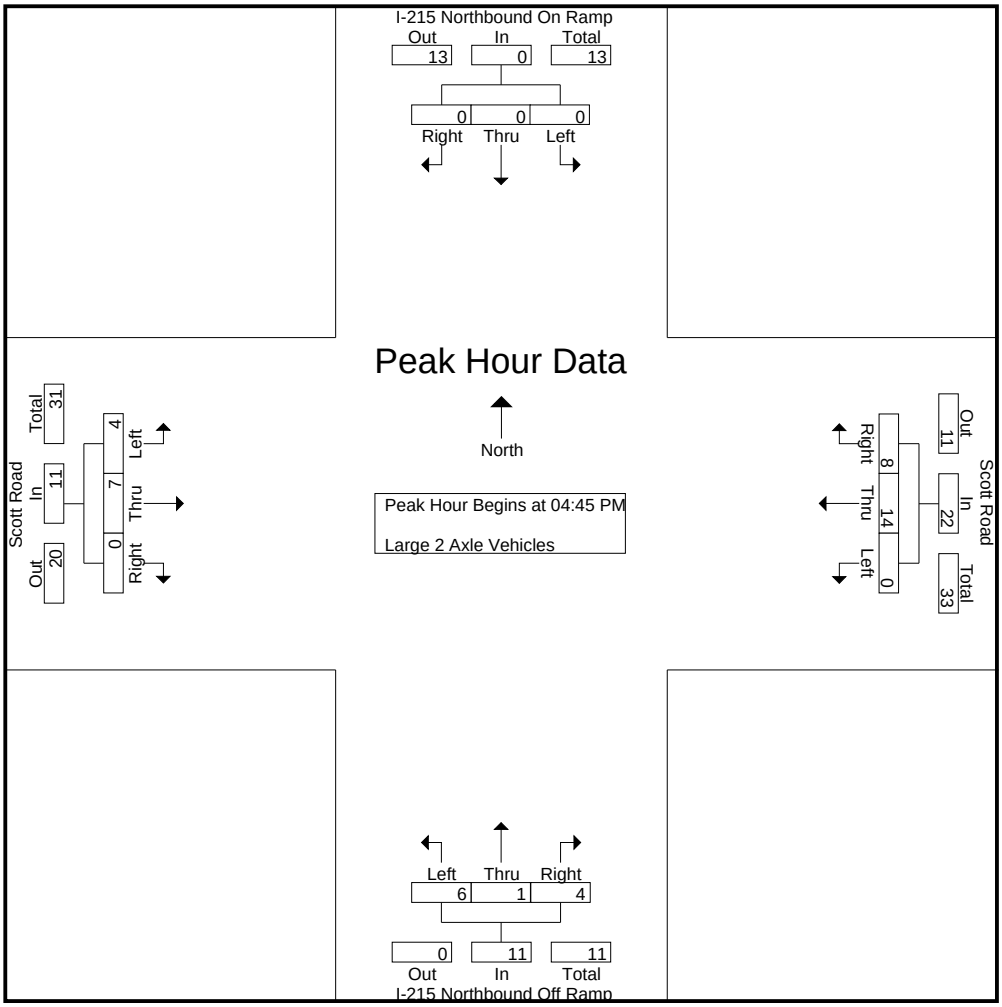

Peak Hour Analysis From 04:45 PM to 05:30 PM - Peak 1 of 1

Peak Hour for Each Approach Begins at:

	04:45 PM				04:45 PM				04:45 PM				04:45 PM			
+0 mins.	0	0	0	0	0	4	1	5	1	0	**2**	3	0	2	0	2
+15 mins.	0	0	0	0	0	1	**3**	4	**2**	0	0	2	1	1	0	2
+30 mins.	0	0	0	0	0	3	2	5	1	0	1	2	**2**	**3**	0	**5**
+45 mins.	0	0	0	0	0	**6**	2	**8**	2	**1**	1	**4**	1	1	0	2
Total Volume	0	0	0	0	0	14	8	22	6	1	4	11	4	7	0	11
% App. Total	0	0	0		0	63.6	36.4		54.5	9.1	36.4		36.4	63.6	0	
PHF	.000	.000	.000	.000	.000	.583	.667	.688	.750	.250	.500	.688	.500	.583	.000	.550

Counts Unlimited Inc.
PO Box 1178
Corona, CA 92878
(951) 268-6268

City of Menifee
N/S: I-215 Northbound Ramps
E/W: Scott Road
Weather: Sunny

File Name : MEN215NSCPM
Site Code : 10209063
Start Date : 10/13/2010
Page No : 1

Groups Printed- 3 Axle Vehicles

	I-215 Northbound On Ramp Southbound				Scott Road Westbound				I-215 Northbound Off Ramp Northbound				Scott Road Eastbound				
Start Time	Left	Thru	Right	App. Total	Left	Thru	Right	App. Total	Left	Thru	Right	App. Total	Left	Thru	Right	App. Total	Int. Total
04:00 PM	0	0	0	0	0	0	0	0	0	0	0	0	1	0	0	1	1
04:15 PM	0	0	0	0	0	0	0	0	0	0	0	0	0	0	0	0	0
04:30 PM	0	0	0	0	0	0	0	0	0	0	0	0	0	0	0	0	0
04:45 PM	0	0	0	0	0	0	0	0	0	0	0	0	0	0	0	0	0
Total	0	0	0	0	0	0	0	0	0	0	0	0	1	0	0	1	1
05:00 PM	0	0	0	0	0	0	0	0	0	0	0	0	0	0	0	0	0
05:15 PM	0	0	0	0	0	0	2	2	0	0	0	0	0	0	0	0	2
05:30 PM	0	0	0	0	0	1	0	1	0	0	0	0	1	0	0	1	2
05:45 PM	0	0	0	0	0	1	0	1	0	0	0	0	0	0	0	0	1
Total	0	0	0	0	0	2	2	4	0	0	0	0	1	0	0	1	5
06:00 PM	0	0	0	0	0	1	0	1	0	0	0	0	0	0	0	0	1
06:15 PM	0	0	0	0	0	0	0	0	0	0	0	0	0	0	0	0	0
06:30 PM	0	0	0	0	0	0	0	0	0	0	0	0	0	0	0	0	0
06:45 PM	0	0	0	0	0	0	0	0	0	0	0	0	0	0	0	0	0
Total	0	0	0	0	0	1	0	1	0	0	0	0	0	0	0	0	1
Grand Total	0	0	0	0	0	3	2	5	0	0	0	0	2	0	0	2	7
Apprch %	0	0	0		0	60	40		0	0	0		100	0	0		
Total %	0	0	0	0	0	42.9	28.6	71.4	0	0	0	0	28.6	0	0	28.6	

	I-215 Northbound On Ramp Southbound				Scott Road Westbound				I-215 Northbound Off Ramp Northbound				Scott Road Eastbound				
Start Time	Left	Thru	Right	App. Total	Left	Thru	Right	App. Total	Left	Thru	Right	App. Total	Left	Thru	Right	App. Total	Int. Total
Peak Hour Analysis From 04:45 PM to 05:30 PM - Peak 1 of 1																	
Peak Hour for Entire Intersection Begins at 04:45 PM																	
04:45 PM	0	0	0	0	0	0	0	0	0	0	0	0	0	0	0	0	0
05:00 PM	0	0	0	0	0	0	0	0	0	0	0	0	0	0	0	0	0
05:15 PM	0	0	0	0	0	0	**2**	**2**	0	0	0	0	0	0	0	0	**2**
05:30 PM	0	0	0	0	0	**1**	0	1	0	0	0	0	**1**	0	0	**1**	2
Total Volume	0	0	0	0	0	1	2	3	0	0	0	0	1	0	0	1	4
% App. Total	0	0	0		0	33.3	66.7		0	0	0		100	0	0		
PHF	.000	.000	.000	.000	.000	.250	.250	.375	.000	.000	.000	.000	.250	.000	.000	.250	.500

Counts Unlimited Inc.
PO Box 1178
Corona, CA 92878
(951) 268-6268

City of Menifee
N/S: I-215 Northbound Ramps
E/W: Scott Road
Weather: Sunny

File Name : MEN215NSCPM
Site Code : 10209063
Start Date : 10/13/2010
Page No : 2

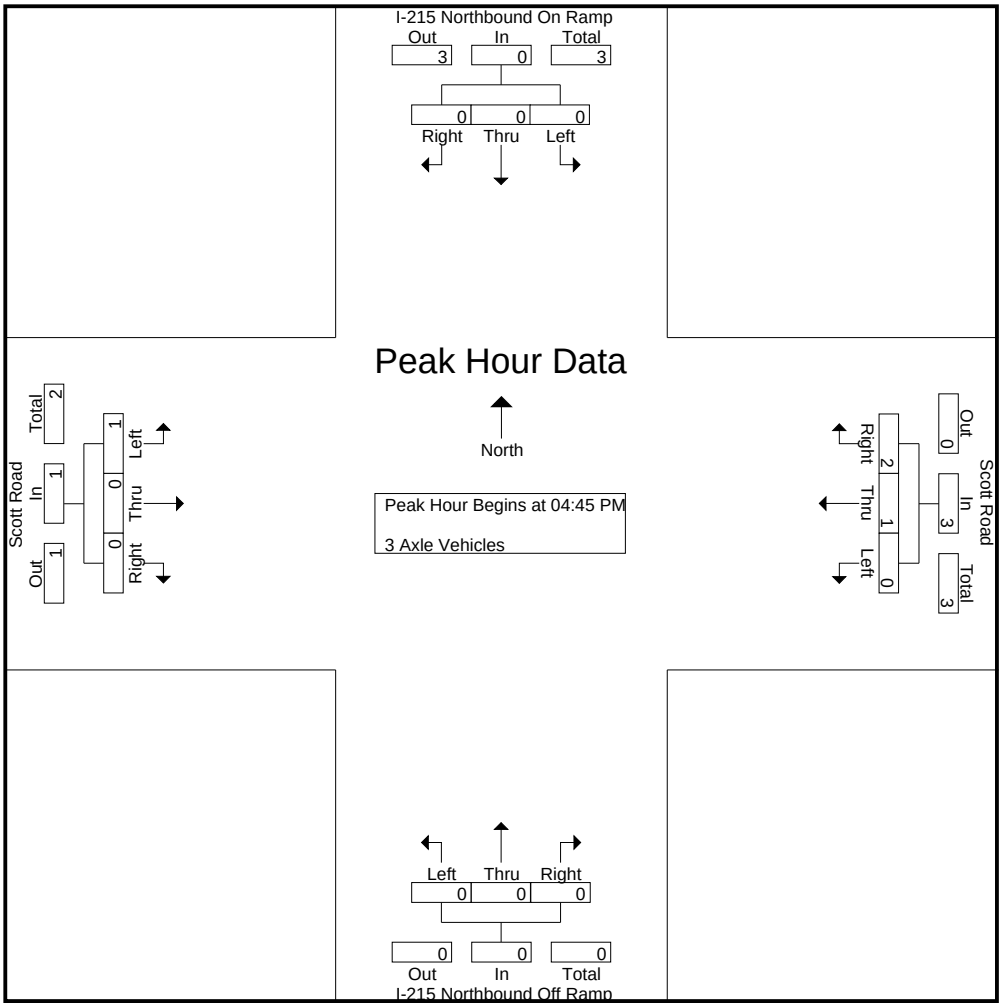

Peak Hour Analysis From 04:45 PM to 05:30 PM - Peak 1 of 1

Peak Hour for Each Approach Begins at:

	04:45 PM				04:45 PM				04:45 PM				04:45 PM			
+0 mins.	0	0	0	0	0	0	0	0	0	0	0	0	0	0	0	0
+15 mins.	0	0	0	0	0	0	0	0	0	0	0	0	0	0	0	0
+30 mins.	0	0	0	0	0	0	**2**	**2**	0	0	0	0	0	0	0	0
+45 mins.	0	0	0	0	0	**1**	0	1	0	0	0	0	**1**	0	0	**1**
Total Volume	0	0	0	0	0	1	2	3	0	0	0	0	1	0	0	1
% App. Total	0	0	0		0	33.3	66.7		0	0	0		100	0	0	
PHF	.000	.000	.000	.000	.000	.250	.250	.375	.000	.000	.000	.000	.250	.000	.000	.250

Counts Unlimited Inc.
PO Box 1178
Corona, CA 92878
(951) 268-6268

City of Menifee
N/S: I-215 Northbound Ramps
E/W: Scott Road
Weather: Sunny

File Name : MEN215NSCPM
Site Code : 10209063
Start Date : 10/13/2010
Page No : 1

Groups Printed- 4+ Axle Trucks

	I-215 Northbound On Ramp Southbound				Scott Road Westbound				I-215 Northbound Off Ramp Northbound				Scott Road Eastbound				
Start Time	Left	Thru	Right	App. Total	Left	Thru	Right	App. Total	Left	Thru	Right	App. Total	Left	Thru	Right	App. Total	Int. Total
04:00 PM	0	0	0	0	0	0	0	0	1	0	0	1	0	1	0	1	2
04:15 PM	0	0	0	0	0	0	0	0	1	0	0	1	1	0	0	1	2
04:30 PM	0	0	0	0	0	0	1	1	0	0	0	0	0	0	0	0	1
04:45 PM	0	0	0	0	0	0	1	1	0	0	0	0	0	0	0	0	1
Total	0	0	0	0	0	0	2	2	2	0	0	2	1	1	0	2	6
05:00 PM	0	0	0	0	0	0	0	0	0	0	0	0	0	0	0	0	0
05:15 PM	0	0	0	0	0	0	0	0	1	0	1	2	0	0	0	0	2
05:30 PM	0	0	0	0	0	1	1	2	0	0	0	0	0	0	0	0	2
05:45 PM	0	0	0	0	0	0	1	1	0	0	1	1	1	2	0	3	5
Total	0	0	0	0	0	1	2	3	1	0	2	3	1	2	0	3	9
06:00 PM	0	0	0	0	0	0	0	0	0	0	1	1	0	0	0	0	1
06:15 PM	0	0	0	0	0	0	0	0	0	0	0	0	0	0	0	0	0
06:30 PM	0	0	0	0	0	2	1	3	0	0	0	0	0	1	0	1	4
06:45 PM	0	0	0	0	0	0	0	0	0	0	1	1	0	3	0	3	4
Total	0	0	0	0	0	2	1	3	0	0	2	2	0	4	0	4	9
Grand Total	0	0	0	0	0	3	5	8	3	0	4	7	2	7	0	9	24
Apprch %	0	0	0		0	37.5	62.5		42.9	0	57.1		22.2	77.8	0		
Total %	0	0	0	0	0	12.5	20.8	33.3	12.5	0	16.7	29.2	8.3	29.2	0	37.5	

	I-215 Northbound On Ramp Southbound				Scott Road Westbound				I-215 Northbound Off Ramp Northbound				Scott Road Eastbound				
Start Time	Left	Thru	Right	App. Total	Left	Thru	Right	App. Total	Left	Thru	Right	App. Total	Left	Thru	Right	App. Total	Int. Total
Peak Hour Analysis From 04:45 PM to 05:30 PM - Peak 1 of 1																	
Peak Hour for Entire Intersection Begins at 04:45 PM																	
04:45 PM	0	0	0	0	0	0	**1**	1	0	0	0	0	0	0	0	0	1
05:00 PM	0	0	0	0	0	0	0	0	0	0	0	0	0	0	0	0	0
05:15 PM	0	0	0	0	0	0	0	0	**1**	0	**1**	**2**	0	0	0	0	**2**
05:30 PM	0	0	0	0	0	**1**	1	**2**	0	0	0	0	0	0	0	0	2
Total Volume	0	0	0	0	0	1	2	3	1	0	1	2	0	0	0	0	5
% App. Total	0	0	0		0	33.3	66.7		50	0	50		0	0	0		
PHF	.000	.000	.000	.000	.000	.250	.500	.375	.250	.000	.250	.250	.000	.000	.000	.000	.625

Counts Unlimited Inc.
PO Box 1178
Corona, CA 92878
(951) 268-6268

City of Menifee
N/S: I-215 Northbound Ramps
E/W: Scott Road
Weather: Sunny

File Name : MEN215NSCPM
Site Code : 10209063
Start Date : 10/13/2010
Page No : 2

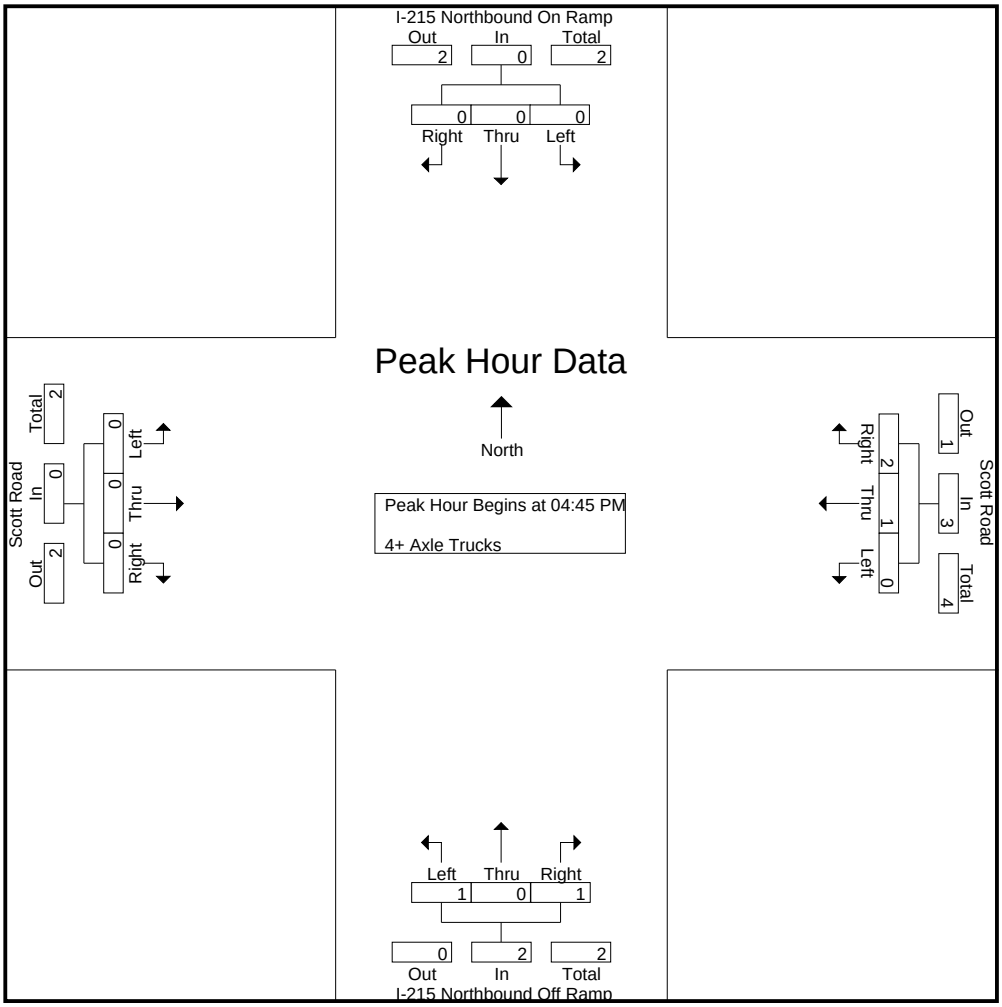

Peak Hour Analysis From 04:45 PM to 05:30 PM - Peak 1 of 1

Peak Hour for Each Approach Begins at:

	04:45 PM				04:45 PM				04:45 PM				04:45 PM			
+0 mins.	0	0	0	0	0	0	**1**	1	0	0	0	0	0	0	0	0
+15 mins.	0	0	0	0	0	0	0	0	0	0	0	0	0	0	0	0
+30 mins.	0	0	0	0	0	0	0	0	**1**	0	**1**	**2**	0	0	0	0
+45 mins.	0	0	0	0	0	**1**	1	**2**	0	0	0	0	0	0	0	0
Total Volume	0	0	0	0	0	1	2	3	1	0	1	2	0	0	0	0
% App. Total	0	0	0		0	33.3	66.7		50	0	50		0	0	0	
PHF	.000	.000	.000	.000	.000	.250	.500	.375	.250	.000	.250	.250	.000	.000	.000	.000

APPENDIX B:
LEVEL OF SERVICE CALCULATIONS

EXISTING CONDITIONS

City of Murrieta General Plan
Existing
AM Peak Hour

Scenario Report

Scenario:	Existing AM
Command:	Existing AM
Volume:	Existing AM
Geometry:	Existing
Impact Fee:	Default Impact Fee
Trip Generation:	Default Trip Generation
Trip Distribution:	Default Trip Distribution
Paths:	Default Path
Routes:	Default Route
Configuration:	Existing AM

City of Murrieta General Plan
Existing
AM Peak Hour

Turning Movement Report

Volume	Northbound			Southbound			Eastbound			Westbound			Total
Type	Left	Thru	Right	Left	Thru	Right	Left	Thru	Right	Left	Thru	Right	Volume
#1 Menifee Road & Scott Road													
Base	167	75	77	80	64	100	74	364	54	69	543	85	1752
Added	0	0	0	0	0	0	0	0	0	0	0	0	0
Total	167	75	77	80	64	100	74	364	54	69	543	85	1752
#2 Leon Road & Scott Road													
Base	224	14	6	4	19	15	4	195	240	11	210	3	945
Added	0	0	0	0	0	0	0	0	0	0	0	0	0
Total	224	14	6	4	19	15	4	195	240	11	210	3	945
#3 Winchester Road/SR-79 & Scott Road													
Base	91	433	9	142	777	52	86	74	55	3	64	155	1941
Added	0	0	0	0	0	0	0	0	0	0	0	0	0
Total	91	433	9	142	777	52	86	74	55	3	64	155	1941
#4 Antelope Road & Keller Road													
Base	6	112	110	18	115	9	8	2	8	270	17	29	704
Added	0	0	0	0	0	0	0	0	0	0	0	0	0
Total	6	112	110	18	115	9	8	2	8	270	17	29	704
#5 Menifee Road - Meadowlark Road & Keller Road													
Base	0	0	0	11	0	121	105	19	0	0	31	10	297
Added	0	0	0	0	0	0	0	0	0	0	0	0	0
Total	0	0	0	11	0	121	105	19	0	0	31	10	297
#6 Briggs Road & Keller Road													
Base	1	2	3	4	5	6	7	8	9	10	11	12	78
Added	0	0	0	0	0	0	0	0	0	0	0	0	0
Total	1	2	3	4	5	6	7	8	9	10	11	12	78
#7 Leon Road & Keller Road													
Base	0	238	0	4	244	0	0	0	0	1	1	6	494
Added	0	0	0	0	0	0	0	0	0	0	0	0	0
Total	0	238	0	4	244	0	0	0	0	1	1	6	494
#8 Winchester Road - SR-79 & Keller Road													
Base	0	502	0	0	793	0	0	0	1	0	0	0	1296
Added	0	0	0	0	0	0	0	0	0	0	0	0	0
Total	0	502	0	0	793	0	0	0	1	0	0	0	1296
#9 Antelope Road & Golden City Drive - Baxter Road													
Base	0	0	0	0	0	0	0	0	0	0	0	0	0
Added	0	0	0	0	0	0	0	0	0	0	0	0	0
Total	0	0	0	0	0	0	0	0	0	0	0	0	0

City of Murrieta General Plan
Existing
AM Peak Hour

Volume Type	Northbound Left	Thru	Right	Southbound Left	Thru	Right	Eastbound Left	Thru	Right	Westbound Left	Thru	Right	Total Volume
#10 Whitewood Roa - /Meadowlark Road & Golden City Drive - Baxter Road													
Base	0	0	0	0	0	0	0	0	0	0	0	0	0
Added	0	0	0	0	0	0	0	0	0	0	0	0	0
Total	0	0	0	0	0	0	0	0	0	0	0	0	0
#11 Briggs Road & Baxter Road - Jean Nicholas													
Base	0	0	0	0	0	0	0	0	0	0	0	0	0
Added	0	0	0	0	0	0	0	0	0	0	0	0	0F
Total	0	0	0	0	0	0	0	0	0	0	0	0	0
#12 Leon Road & Jean Nicholas													
Base	0	208	15	16	230	0	0	0	0	27	0	71	567
Added	0	0	0	0	0	0	0	0	0	0	0	0	0
Total	0	208	15	16	230	0	0	0	0	27	0	71	567
#13 Winchester Road - SR-79 & Nicholas - Skyview													
Base	48	474	0	0	953	35	26	0	29	0	0	0	1565
Added	0	0	0	0	0	0	0	0	0	0	0	0	0
Total	48	474	0	0	953	35	26	0	29	0	0	0	1565
#14 Antelope Road & Linnel Lane Extension													
Base	0	0	0	0	0	0	0	0	0	0	0	0	0
Added	0	0	0	0	0	0	0	0	0	0	0	0	0
Total	0	0	0	0	0	0	0	0	0	0	0	0	0
#15 Whitewood Road - Meadowlark Road & Linnel Lane Extension													
Base	0	0	0	0	0	0	0	0	0	0	0	0	0
Added	0	0	0	0	0	0	0	0	0	0	0	0	0
Total	0	0	0	0	0	0	0	0	0	0	0	0	0
#16 Leon Road & Max Gillis Road													
Base	173	30	101	196	43	127	91	387	146	96	345	132	1867
Added	0	0	0	0	0	0	0	0	0	0	0	0	0
Total	173	30	101	196	43	127	91	387	146	96	345	132	1867
#17 Winchester Road - SR-79 & Max Gillis - Thompson													
Base	358	496	115	12	972	45	33	58	508	158	212	6	2973
Added	0	0	0	0	0	0	0	0	0	0	0	0	0
Total	358	496	115	12	972	45	33	58	508	158	212	6	2973
#18 California Oaks Road & Clinton Keith Road													
Base	111	0	339	0	0	0	0	493	113	437	508	0	2001
Added	0	0	0	0	0	0	0	0	0	0	0	0	0
Total	111	0	339	0	0	0	0	493	113	437	508	0	2001

City of Murrieta General Plan
Existing
AM Peak Hour

Volume Type	Northbound Left	Thru	Right	Southbound Left	Thru	Right	Eastbound Left	Thru	Right	Westbound Left	Thru	Right	Total Volume
#19 I-215 SB Off-Ramp & Clinton Keith Road													
Base	0	0	0	88	2	388	0	786	514	207	368	0	2353
Added	0	0	0	0	0	0	0	0	0	0	0	0	0
Total	0	0	0	88	2	388	0	786	514	207	368	0	2353
#20 I-215 NB Off Ramp & Clinton Keith Road													
Base	128	0	432	0	0	0	467	486	0	0	489	100	2102
Added	0	0	0	0	0	0	0	0	0	0	0	0	0
Total	128	0	432	0	0	0	467	486	0	0	489	100	2102
#21 Antelope Road & Clinton Keith Road													
Base	0	0	0	0	0	0	0	0	0	0	0	0	0
Added	0	0	0	0	0	0	0	0	0	0	0	0	0
Total	0	0	0	0	0	0	0	0	0	0	0	0	0
#22 Meadowlark Lane - Whitewood Road & Clinton Keith Road													
Base	154	76	30	0	161	141	136	4	173	34	7	1	917
Added	0	0	0	0	0	0	0	0	0	0	0	0	0
Total	154	76	30	0	161	141	136	4	173	34	7	1	917
#23 Liberty Road & Clinton Keith Road													
Base	0	0	0	0	0	0	0	0	0	0	0	0	0
Added	0	0	0	0	0	0	0	0	0	0	0	0	0
Total	0	0	0	0	0	0	0	0	0	0	0	0	0
#24 Leon Road & Clinton Keith Road													
Base	0	0	0	0	0	0	0	0	0	0	0	0	0
Added	0	0	0	0	0	0	0	0	0	0	0	0	0
Total	0	0	0	0	0	0	0	0	0	0	0	0	0
#25 Winchester Road - SR-79 & Benton Road													
Base	0	762	168	267	1369	0	0	0	0	301	0	142	3009
Added	0	0	0	0	0	0	0	0	0	0	0	0	0
Total	0	762	168	267	1369	0	0	0	0	301	0	142	3009
#26 Winchester Road - SR-79 & Via Mira Mosa													
Base	12	789	409	167	1540	104	128	18	37	184	16	28	3432
Added	0	0	0	0	0	0	0	0	0	0	0	0	0
Total	12	789	409	167	1540	104	128	18	37	184	16	28	3432
#27 Monroe Ave & Los Alamos													
Base	0	0	0	288	0	142	70	315	0	0	507	302	1624
Added	0	0	0	0	0	0	0	0	0	0	0	0	0
Total	0	0	0	288	0	142	70	315	0	0	507	302	1624

City of Murrieta General Plan
Existing
AM Peak Hour

Volume Type	Northbound Left	Thru	Right	Southbound Left	Thru	Right	Eastbound Left	Thru	Right	Westbound Left	Thru	Right	Total Volume
#28 Jefferson Avenue & Murrieta Hot Springs Road													
Base	0	203	185	226	555	0	0	0	0	652	0	190	2011
Added	0	0	0	0	0	0	0	0	0	0	0	0	0
Total	0	203	185	226	555	0	0	0	0	652	0	190	2011
#29 Madison Avenue & Murrieta Hot Springs Road													
Base	28	63	147	210	120	87	68	318	43	354	710	127	2275
Added	0	0	0	0	0	0	0	0	0	0	0	0	0
Total	28	63	147	210	120	87	68	318	43	354	710	127	2275
#30 I-15 SB Off-Ramp & Murrieta Hot Springs Road													
Base	0	0	0	773	0	397	0	446	194	0	956	47	2813
Added	0	0	0	0	0	0	0	0	0	0	0	0	0
Total	0	0	0	773	0	397	0	446	194	0	956	47	2813
#31 I-15 NB Off-Ramp & Murrieta Hot Springs Road													
Base	235	0	91	0	0	0	115	1068	0	0	840	693	3042
Added	0	0	0	0	0	0	0	0	0	0	0	0	0
Total	235	0	91	0	0	0	115	1068	0	0	840	693	3042
#32 I-215 SB Off-Ramp & Murrieta Hot Springs Road													
Base	0	0	0	526	0	420	0	1105	53	0	1343	378	3825
Added	0	0	0	0	0	0	0	0	0	0	0	0	0
Total	0	0	0	526	0	420	0	1105	53	0	1343	378	3825
#33 I-215 NB Off-Ramp & Murrieta Hot Springs Road													
Base	151	0	163	0	0	0	0	1444	115	0	1591	466	3930
Added	0	0	0	0	0	0	0	0	0	0	0	0	0
Total	151	0	163	0	0	0	0	1444	115	0	1591	466	3930
#34 Jackson Avenue & Murrieta Hot Springs Road													
Base	66	0	52	0	0	0	0	1217	24	69	1439	0	2867
Added	0	0	0	0	0	0	0	0	0	0	0	0	0
Total	66	0	52	0	0	0	0	1217	24	69	1439	0	2867
#35 Margarita Road & Murrieta Hot Springs Road													
Base	674	8	131	6	3	1	22	782	581	197	999	5	3409
Added	0	0	0	0	0	0	0	0	0	0	0	0	0
Total	674	8	131	6	3	1	22	782	581	197	999	5	3409
#36 French Valley Parkway & Murrieta Hot Springs Road													
Base	0	0	0	0	0	0	0	0	0	0	0	0	0
Added	0	0	0	0	0	0	0	0	0	0	0	0	0
Total	0	0	0	0	0	0	0	0	0	0	0	0	0

City of Murrieta General Plan
Existing
AM Peak Hour

Volume Type	Northbound Left	Thru	Right	Southbound Left	Thru	Right	Eastbound Left	Thru	Right	Westbound Left	Thru	Right	Total Volume
#37 Jefferson Avenue & Guava Street													
Base	0	319	11	10	1198	0	0	0	0	30	0	16	1584
Added	0	0	0	0	0	0	0	0	0	0	0	0	0
Total	0	319	11	10	1198	0	0	0	0	30	0	16	1584
#38 Jefferson Avenue & Cherry Street													
Base	105	553	0	0	742	28	10	0	50	0	0	0	1488
Added	0	0	0	0	0	0	0	0	0	0	0	0	0
Total	105	553	0	0	742	28	10	0	50	0	0	0	1488
#39 Washington Ave & Calle Del Oso Oro/Nutmeg													
Base	226	199	101	53	264	57	36	223	551	162	109	31	2012
Added	0	0	0	0	0	0	0	0	0	0	0	0	0
Total	226	199	101	53	264	57	36	223	551	162	109	31	2012
#40 Clinton Keith Rd & Calle de Oso Oro/Bear Creek Dr													
Base	2	262	155	31	157	75	69	37	2	64	26	64	944
Added	0	0	0	0	0	0	0	0	0	0	0	0	0
Total	2	262	155	31	157	75	69	37	2	64	26	64	944
#41 Jefferson Ave & Nutmeg St													
Base	80	32	136	11	93	7	15	181	178	261	250	22	1266
Added	0	0	0	0	0	0	0	0	0	0	0	0	0
Total	80	32	136	11	93	7	15	181	178	261	250	22	1266
#42 Jefferson Ave & Magnolia St													
Base	56	164	6	5	428	143	124	3	95	17	6	1	1048
Added	0	0	0	0	0	0	0	0	0	0	0	0	0
Total	56	164	6	5	428	143	124	3	95	17	6	1	1048
#43 Jefferson Ave & Lemon St													
Base	76	257	0	1	501	61	21	1	82	1	3	2	1006
Added	0	0	0	0	0	0	0	0	0	0	0	0	0
Total	76	257	0	1	501	61	21	1	82	1	3	2	1006
#44 Jefferson Ave & Kalmia St													
Base	115	126	97	265	273	52	19	518	207	138	428	200	2438
Added	0	0	0	0	0	0	0	0	0	0	0	0	0
Total	115	126	97	265	273	52	19	518	207	138	428	200	2438
#45 Jefferson Ave & Juniper St													
Base	69	258	15	37	526	31	54	84	79	8	78	23	1262
Added	0	0	0	0	0	0	0	0	0	0	0	0	0
Total	69	258	15	37	526	31	54	84	79	8	78	23	1262

City of Murrieta General Plan
Existing
AM Peak Hour

Volume Type	Northbound Left	Thru	Right	Southbound Left	Thru	Right	Eastbound Left	Thru	Right	Westbound Left	Thru	Right	Total Volume
#46 Jefferson Ave & Ivy St/Los Alamos Rd													
Base	100	171	39	152	441	37	27	145	102	171	120	132	1637
Added	0	0	0	0	0	0	0	0	0	0	0	0	0
Total	100	171	39	152	441	37	27	145	102	171	120	132	1637
#47 Madison Ave & Kalmia St													
Base	108	0	237	0	0	0	0	765	107	310	772	0	2299
Added	0	0	0	0	0	0	0	0	0	0	0	0	0
Total	108	0	237	0	0	0	0	765	107	310	772	0	2299
#48 Madison Ave/I-15 SB Ramps & Kalmia St													
Base	0	0	0	305	2	278	0	483	373	412	773	0	2626
Added	0	0	0	0	0	0	0	0	0	0	0	0	0
Total	0	0	0	305	2	278	0	483	373	412	773	0	2626
#49 Monroe Ave & Murrieta Hot Springs Rd													
Base	0	0	0	0	0	71	125	1097	0	0	1463	25	2781
Added	0	0	0	0	0	0	0	0	0	0	0	0	0
Total	0	0	0	0	0	71	125	1097	0	0	1463	25	2781
#50 Hancock Ave & Murrieta Hot Springs Rd													
Base	0	0	0	264	0	147	227	884	0	0	1346	464	3332
Added	0	0	0	0	0	0	0	0	0	0	0	0	0
Total	0	0	0	264	0	147	227	884	0	0	1346	464	3332
#51 Alta Murrieta Dr & Murrieta Hot Springs Rd													
Base	175	57	14	61	94	297	249	995	235	72	1350	107	3706
Added	0	0	0	0	0	0	0	0	0	0	0	0	0
Total	175	57	14	61	94	297	249	995	235	72	1350	107	3706
#52 Winchester Road - SR-79 & Murrieta Hot Springs Rd													
Base	118	729	135	128	1408	536	512	318	137	268	340	37	4666
Added	0	0	0	0	0	0	0	0	0	0	0	0	0
Total	118	729	135	128	1408	536	512	318	137	268	340	37	4666
#53 Hancock Ave & Los Alamos Rd													
Base	51	143	93	526	246	156	125	601	66	226	711	293	3237
Added	0	0	0	0	0	0	0	0	0	0	0	0	0
Total	51	143	93	526	246	156	125	601	66	226	711	293	3237
#54 I-215 SB Ramps & Los Alamos Rd													
Base	0	0	0	119	1	497	0	801	426	250	899	0	2993
Added	0	0	0	0	0	0	0	0	0	0	0	0	0
Total	0	0	0	119	1	497	0	801	426	250	899	0	2993

City of Murrieta General Plan
Existing
AM Peak Hour

Volume Type	Northbound Left	Thru	Right	Southbound Left	Thru	Right	Eastbound Left	Thru	Right	Westbound Left	Thru	Right	Total Volume
#55 I-215 NB Ramps & Los Alamos Rd													
Base	209	1	107	0	0	0	242	670	0	0	951	72	2252
Added	0	0	0	0	0	0	0	0	0	0	0	0	0
Total	209	1	107	0	0	0	242	670	0	0	951	72	2252
#56 Whitewood Rd & Los Alamos Rd													
Base	126	90	59	11	110	254	124	226	64	33	270	6	1373
Added	0	0	0	0	0	0	0	0	0	0	0	0	0
Total	126	90	59	11	110	254	124	226	64	33	270	6	1373
#57 Whitewood Rd & Murrieta Hot Springs Rd													
Base	4	38	43	353	20	63	31	1106	4	23	1556	241	3482
Added	0	0	0	0	0	0	0	0	0	0	0	0	0
Total	4	38	43	353	20	63	31	1106	4	23	1556	241	3482
#58 Adams Ave & Guava St													
Base	0	13	2	94	67	0	0	0	0	3	0	44	223
Added	0	0	0	0	0	0	0	0	0	0	0	0	0
Total	0	13	2	94	67	0	0	0	0	3	0	44	223
#59 Nutmeg St & Clinton Keith Rd													
Base	69	34	201	101	55	39	17	357	79	206	404	39	1601
Added	0	0	0	0	0	0	0	0	0	0	0	0	0
Total	69	34	201	101	55	39	17	357	79	206	404	39	1601
#60 Mitchell Rd & Clinton Keith Rd													
Base	122	0	212	0	0	0	0	862	254	158	752	0	2360
Added	0	0	0	0	0	0	0	0	0	0	0	0	0
Total	122	0	212	0	0	0	0	862	254	158	752	0	2360
#61 I-215 SB Ramps & Scott Rd													
Base	0	0	0	258	4	88	0	535	320	447	501	0	2153
Added	0	0	0	0	0	0	0	0	0	0	0	0	0
Total	0	0	0	258	4	88	0	535	320	447	501	0	2153
#62 I-215 NB Ramps & Scott Rd													
Base	145	12	349	0	0	0	108	603	0	0	792	380	2389
Added	0	0	0	0	0	0	0	0	0	0	0	0	0
Total	145	12	349	0	0	0	108	603	0	0	792	380	2389
#104 Antelope Road & Keller Road													
Base	0	0	0	0	0	0	0	0	0	0	0	0	0
Added	0	0	0	0	0	0	0	0	0	0	0	0	0
Total	0	0	0	0	0	0	0	0	0	0	0	0	0

City of Murrieta General Plan
Existing
AM Peak Hour

Volume Type	Northbound Left	Thru	Right	Southbound Left	Thru	Right	Eastbound Left	Thru	Right	Westbound Left	Thru	Right	Total Volume
#105 Menifee Road - Meadowlark Road & Keller Road													
Base	0	0	0	0	0	0	0	0	0	0	0	0	0
Added	0	0	0	0	0	0	0	0	0	0	0	0	0
Total	0	0	0	0	0	0	0	0	0	0	0	0	0
#122 Meadowlark Lane - Whitewood Road & Clinton Keith Road													
Base	0	0	0	0	0	0	0	0	0	0	0	0	0
Added	0	0	0	0	0	0	0	0	0	0	0	0	0
Total	0	0	0	0	0	0	0	0	0	0	0	0	0
#138 Jefferson Avenue & Cherry Street													
Base	0	0	0	0	0	0	0	0	0	0	0	0	0
Added	0	0	0	0	0	0	0	0	0	0	0	0	0
Total	0	0	0	0	0	0	0	0	0	0	0	0	0
#141 Jefferson Ave & Nutmeg St													
Base	0	0	0	0	0	0	0	0	0	0	0	0	0
Added	0	0	0	0	0	0	0	0	0	0	0	0	0
Total	0	0	0	0	0	0	0	0	0	0	0	0	0
#142 Jefferson Ave & Magnolia St													
Base	0	0	0	0	0	0	0	0	0	0	0	0	0
Added	0	0	0	0	0	0	0	0	0	0	0	0	0
Total	0	0	0	0	0	0	0	0	0	0	0	0	0
#149 Monroe Ave & Murrieta Hot Springs Rd													
Base	0	0	0	0	0	71	125	1097	0	0	1463	25	2781
Added	0	0	0	0	0	0	0	0	0	0	0	0	0
Total	0	0	0	0	0	71	125	1097	0	0	1463	25	2781

City of Murrieta General Plan
Existing
AM Peak Hour

Impact Analysis Report
Level Of Service

Intersection	Base LOS	Base Del/ Veh	Base V/ C	Future LOS	Future Del/ Veh	Future V/ C	Change in
# 1 Menifee Road & Scott Road	B	19.8	0.376	B	19.8	0.376	+ 0.000 D/V
# 2 Leon Road & Scott Road	B	12.4	0.589	B	12.4	0.589	+ 0.000 V/C
# 3 Winchester Road/SR-79 & Scott	C	20.7	0.432	C	20.7	0.432	+ 0.000 D/V
# 4 Antelope Road & Keller Road	B	10.4	0.449	B	10.4	0.449	+ 0.000 V/C
# 5 Menifee Road - Meadowlark Road	A	8.1	0.158	A	8.1	0.158	+ 0.000 V/C
# 7 Leon Road & Keller Road	B	10.2	0.000	B	10.2	0.000	+ 0.000 D/V
# 8 Winchester Road - SR-79 & Kell	B	14.2	0.000	B	14.2	0.000	+ 0.000 D/V
# 12 Leon Road & Jean Nicholas	B	10.7	0.000	B	10.7	0.000	+ 0.000 D/V
# 13 Winchester Road - SR-79 & Nich	A	4.0	0.321	A	4.0	0.321	+ 0.000 D/V
# 16 Leon Road & Max Gillis Road	C	24.6	0.310	C	24.6	0.310	+ 0.000 D/V
# 17 Winchester Road - SR-79 & Max	D	37.1	0.870	D	37.1	0.870	+ 0.000 D/V
# 18 California Oaks Road & Clinton	C	21.7	0.545	C	21.7	0.545	+ 0.000 D/V
# 19 I-215 SB Off-Ramp & Clinton Ke	C	23.9	0.770	C	23.9	0.770	+ 0.000 D/V
# 20 I-215 NB Off Ramp & Clinton Ke	C	26.2	0.745	C	26.2	0.745	+ 0.000 D/V
# 22 Meadowlark Lane - Whitewood Ro	B	10.5	0.287	B	10.5	0.287	+ 0.000 V/C
# 25 Winchester Road - SR-79 & Bent	B	14.4	0.465	B	14.4	0.465	+ 0.000 D/V
# 26 Winchester Road - SR-79 & Via	B	14.2	0.600	B	14.2	0.600	+ 0.000 D/V
# 27 Monroe Ave & Los Alamos	B	15.0	0.314	B	15.0	0.314	+ 0.000 D/V
# 28 Jefferson Avenue & Murrieta Ho	C	21.2	0.472	C	21.2	0.472	+ 0.000 D/V
# 29 Madison Avenue & Murrieta Hot	C	25.3	0.307	C	25.3	0.307	+ 0.000 D/V
# 30 I-15 SB Off-Ramp & Murrieta Ho	B	17.7	0.521	B	17.7	0.521	+ 0.000 D/V
# 31 I-15 NB Off-Ramp & Murrieta Ho	B	11.8	0.291	B	11.8	0.291	+ 0.000 D/V
# 32 I-215 SB Off-Ramp & Murrieta H	B	16.0	0.501	B	16.0	0.501	+ 0.000 D/V

City of Murrieta General Plan
Existing
AM Peak Hour

Intersection	Base LOS	Base Del/ Veh	Base V/ C	Future LOS	Future Del/ Veh	Future V/ C	Change in
# 33 I-215 NB Off-Ramp & Murrieta H	A	5.4	0.369	A	5.4	0.369	+ 0.000 D/V
# 34 Jackson Avenue & Murrieta Hot	A	4.3	0.303	A	4.3	0.303	+ 0.000 D/V
# 35 Margarita Road & Murrieta Hot	B	19.2	0.666	B	19.2	0.666	+ 0.000 D/V
# 37 Jefferson Avenue & Guava Stree	A	2.0	0.352	A	2.0	0.352	+ 0.000 D/V
# 38 Jefferson Avenue & Cherry Stre	C	15.2	0.000	C	15.2	0.000	+ 0.000 D/V
# 39 Washington Ave & Calle Del Oso	C	29.2	0.648	C	29.2	0.648	+ 0.000 D/V
# 40 Clinton Keith Rd & Calle de Os	B	13.6	0.195	B	13.6	0.195	+ 0.000 D/V
# 41 Jefferson Ave & Nutmeg St	B	13.2	0.535	B	13.2	0.535	+ 0.000 V/C
# 42 Jefferson Ave & Magnolia St	C	18.2	0.796	C	18.2	0.796	+ 0.000 V/C
# 43 Jefferson Ave & Lemon St	B	10.9	0.370	B	10.9	0.370	+ 0.000 D/V
# 44 Jefferson Ave & Kalmia St	C	26.2	0.449	C	26.2	0.449	+ 0.000 D/V
# 45 Jefferson Ave & Juniper St	B	18.6	0.243	B	18.6	0.243	+ 0.000 D/V
# 46 Jefferson Ave & Ivy St/Los Ala	C	27.9	0.345	C	27.9	0.345	+ 0.000 D/V
# 47 Madison Ave & Kalmia St	B	16.2	0.320	B	16.2	0.320	+ 0.000 D/V
# 48 Madison Ave/I-15 SB Ramps & Ka	C	20.4	0.537	C	20.4	0.537	+ 0.000 D/V
# 49 Monroe Ave & Murrieta Hot Spri	C	15.8	0.000	C	15.8	0.000	+ 0.000 D/V
# 50 Hancock Ave & Murrieta Hot Spr	B	11.7	0.428	B	11.7	0.428	+ 0.000 D/V
# 51 Alta Murrieta Dr & Murrieta Ho	C	21.3	0.432	C	21.3	0.432	+ 0.000 D/V
# 52 Winchester Road - SR-79 & Murr	C	24.0	0.606	C	24.0	0.606	+ 0.000 D/V
# 53 Hancock Ave & Los Alamos Rd	C	28.4	0.613	C	28.4	0.613	+ 0.000 D/V
# 54 I-215 SB Ramps & Los Alamos Rd	B	18.0	0.522	B	18.0	0.522	+ 0.000 D/V
# 55 I-215 NB Ramps & Los Alamos Rd	B	15.4	0.462	B	15.4	0.462	+ 0.000 D/V
# 56 Whitewood Rd & Los Alamos Rd	C	26.7	0.372	C	26.7	0.372	+ 0.000 D/V
# 57 Whitewood Rd & Murrieta Hot Sp	B	12.6	0.518	B	12.6	0.518	+ 0.000 D/V
# 58 Adams Ave & Guava St	A	8.6	0.000	A	8.6	0.000	+ 0.000 D/V

City of Murrieta General Plan
Existing
AM Peak Hour

Intersection	Base LOS	Base Del/ Veh	Base V/ C	Future LOS	Future Del/ Veh	Future V/ C	Change in
# 59 Nutmeg St & Clinton Keith Rd	C	20.6	0.366	C	20.6	0.366	+ 0.000 D/V
# 61 I-215 SB Ramps & Scott Rd	C	23.2	0.684	C	23.2	0.684	+ 0.000 D/V
# 62 I-215 NB Ramps & Scott Rd	B	18.0	0.693	B	18.0	0.693	+ 0.000 D/V

City of Murrieta General Plan
Existing
AM Peak Hour

Level Of Service Computation Report
2000 HCM Operations Method (Base Volume Alternative)

Intersection #1 Menifee Road & Scott Road

Cycle (sec): 100 Critical Vol./Cap.(X): 0.376
Loss Time (sec): 0 (Y+R=4.0 sec) Average Delay (sec/veh): 19.8
Optimal Cycle: 30 Level Of Service: B

Street Name:	Menifee Rd						Scott Rd					
Approach:	North Bound			South Bound			East Bound			West Bound		
Movement:	L - T - R			L - T - R			L - T - R			L - T - R		
Control:	Permitted			Permitted			Protected			Protected		
Rights:	Include			Include			Include			Include		
Min. Green:	0	0	0	0	0	0	0	0	0	0	0	0
Lanes:	1 0	1 0	1	1 0	0 1	0	1 0	1 1	0	1 0	1 1	0
Volume Module:												
Base Vol:	167	75	77	80	64	100	74	364	54	69	543	85
Growth Adj:	1.00	1.00	1.00	1.00	1.00	1.00	1.00	1.00	1.00	1.00	1.00	1.00
Initial Bse:	167	75	77	80	64	100	74	364	54	69	543	85
User Adj:	1.00	1.00	1.00	1.00	1.00	1.00	1.00	1.00	1.00	1.00	1.00	1.00
PHF Adj:	1.00	1.00	1.00	1.00	1.00	1.00	1.00	1.00	1.00	1.00	1.00	1.00
PHF Volume:	167	75	77	80	64	100	74	364	54	69	543	85
Reduct Vol:	0	0	0	0	0	0	0	0	0	0	0	0
Reduced Vol:	167	75	77	80	64	100	74	364	54	69	543	85
PCE Adj:	1.00	1.00	1.00	1.00	1.00	1.00	1.00	1.00	1.00	1.00	1.00	1.00
MLF Adj:	1.00	1.00	1.00	1.00	1.00	1.00	1.00	1.00	1.00	1.00	1.00	1.00
FinalVolume:	167	75	77	80	64	100	74	364	54	69	543	85
Saturation Flow Module:												
Sat/Lane:	1900	1900	1900	1900	1900	1900	1900	1900	1900	1900	1900	1900
Adjustment:	0.56	1.00	0.85	0.67	0.91	0.91	0.95	0.93	0.93	0.95	0.93	0.93
Lanes:	1.00	1.00	1.00	1.00	0.39	0.61	1.00	1.74	0.26	1.00	1.73	0.27
Final Sat.:	1058	1900	1615	1264	674	1053	1805	3084	458	1805	3059	479
Capacity Analysis Module:												
Vol/Sat:	0.16	0.04	0.05	0.06	0.09	0.09	0.04	0.12	0.12	0.04	0.18	0.18
Crit Moves:	****						****				****	
Green/Cycle:	0.42	0.42	0.42	0.42	0.42	0.42	0.11	0.44	0.44	0.14	0.47	0.47
Volume/Cap:	0.38	0.09	0.11	0.15	0.23	0.23	0.38	0.27	0.27	0.27	0.38	0.38
Delay/Veh:	20.6	17.6	17.8	18.1	18.8	18.8	42.6	18.0	18.0	38.8	17.1	17.1
User DelAdj:	1.00	1.00	1.00	1.00	1.00	1.00	1.00	1.00	1.00	1.00	1.00	1.00
AdjDel/Veh:	20.6	17.6	17.8	18.1	18.8	18.8	42.6	18.0	18.0	38.8	17.1	17.1
LOS by Move:	C	B	B	B	B	B	D	B	B	D	B	B
HCM2kAvgQ:	4	1	1	2	3	3	2	4	4	2	6	6

Note: Queue reported is the number of cars per lane.

City of Murrieta General Plan
Existing
AM Peak Hour

Level Of Service Computation Report
2000 HCM 4-Way Stop Method (Base Volume Alternative)

Intersection #2 Leon Road & Scott Road

Cycle (sec): 100 Critical Vol./Cap.(X): 0.589
Loss Time (sec): 0 (Y+R=4.0 sec) Average Delay (sec/veh): 12.4
Optimal Cycle: 0 Level Of Service: B

Street Name:	Leon Rd						Scott Rd					
Approach:	North Bound			South Bound			East Bound			West Bound		
Movement:	L - T - R			L - T - R			L - T - R			L - T - R		
Control:	Stop Sign			Stop Sign			Stop Sign			Stop Sign		
Rights:	Include			Include			Include			Include		
Min. Green:	0	0	0	0	0	0	0	0	0	0	0	0
Lanes:	0 0	1! 0	0	0 0	1! 0	0	0 0	1! 0	0	0 0	1! 0	0
Volume Module:												
Base Vol:	224	14	6	4	19	15	4	195	240	11	210	3
Growth Adj:	1.00	1.00	1.00	1.00	1.00	1.00	1.00	1.00	1.00	1.00	1.00	1.00
Initial Bse:	224	14	6	4	19	15	4	195	240	11	210	3
User Adj:	1.00	1.00	1.00	1.00	1.00	1.00	1.00	1.00	1.00	1.00	1.00	1.00
PHF Adj:	1.00	1.00	1.00	1.00	1.00	1.00	1.00	1.00	1.00	1.00	1.00	1.00
PHF Volume:	224	14	6	4	19	15	4	195	240	11	210	3
Reduct Vol:	0	0	0	0	0	0	0	0	0	0	0	0
Reduced Vol:	224	14	6	4	19	15	4	195	240	11	210	3
PCE Adj:	1.00	1.00	1.00	1.00	1.00	1.00	1.00	1.00	1.00	1.00	1.00	1.00
MLF Adj:	1.00	1.00	1.00	1.00	1.00	1.00	1.00	1.00	1.00	1.00	1.00	1.00
FinalVolume:	224	14	6	4	19	15	4	195	240	11	210	3
Saturation Flow Module:												
Adjustment:	1.00	1.00	1.00	1.00	1.00	1.00	1.00	1.00	1.00	1.00	1.00	1.00
Lanes:	0.92	0.06	0.02	0.11	0.50	0.39	0.01	0.44	0.55	0.05	0.94	0.01
Final Sat.:	545	34	15	57	272	214	7	331	407	32	610	9
Capacity Analysis Module:												
Vol/Sat:	0.41	0.41	0.41	0.07	0.07	0.07	0.59	0.59	0.59	0.34	0.34	0.34
Crit Moves:		****			****			****			****	
Delay/Veh:	12.1	12.1	12.1	9.0	9.0	9.0	13.7	13.7	13.7	10.8	10.8	10.8
Delay Adj:	1.00	1.00	1.00	1.00	1.00	1.00	1.00	1.00	1.00	1.00	1.00	1.00
AdjDel/Veh:	12.1	12.1	12.1	9.0	9.0	9.0	13.7	13.7	13.7	10.8	10.8	10.8
LOS by Move:	B	B	B	A	A	A	B	B	B	B	B	B
ApproachDel:	12.1			9.0			13.7			10.8		
Delay Adj:	1.00			1.00			1.00			1.00		
ApprAdjDel:	12.1			9.0			13.7			10.8		
LOS by Appr:	B			A			B			B		
AllWayAvgQ:	0.6	0.6	0.6	0.1	0.1	0.1	1.3	1.3	1.3	0.5	0.5	0.5

Note: Queue reported is the number of cars per lane.

City of Murrieta General Plan
Existing
AM Peak Hour

Level Of Service Computation Report
2000 HCM Operations Method (Base Volume Alternative)

Intersection #3 Winchester Road/SR-79 & Scott Road

Cycle (sec):	100	Critical Vol./Cap.(X):	0.432
Loss Time (sec):	0 (Y+R=4.0 sec)	Average Delay (sec/veh):	20.7
Optimal Cycle:	33	Level Of Service:	C

Street Name:	Winchester Road/SR-79						Scott Road					
Approach:	North Bound			South Bound			East Bound			West Bound		
Movement:	L - T - R			L - T - R			L - T - R			L - T - R		
Control:	Protected			Protected			Permitted			Permitted		
Rights:	Include			Include			Include			Include		
Min. Green:	0	0	0	0	0	0	0	0	0	0	0	0
Lanes:	1 0	1	1 0	1 0	1	1 0	0 0	1!	0 0	0 0	1!	0 0
Volume Module:												
Base Vol:	91	433	9	142	777	52	86	74	55	3	64	155
Growth Adj:	1.00	1.00	1.00	1.00	1.00	1.00	1.00	1.00	1.00	1.00	1.00	1.00
Initial Bse:	91	433	9	142	777	52	86	74	55	3	64	155
User Adj:	1.00	1.00	1.00	1.00	1.00	1.00	1.00	1.00	1.00	1.00	1.00	1.00
PHF Adj:	1.00	1.00	1.00	1.00	1.00	1.00	1.00	1.00	1.00	1.00	1.00	1.00
PHF Volume:	91	433	9	142	777	52	86	74	55	3	64	155
Reduct Vol:	0	0	0	0	0	0	0	0	0	0	0	0
Reduced Vol:	91	433	9	142	777	52	86	74	55	3	64	155
PCE Adj:	1.00	1.00	1.00	1.00	1.00	1.00	1.00	1.00	1.00	1.00	1.00	1.00
MLF Adj:	1.00	1.00	1.00	1.00	1.00	1.00	1.00	1.00	1.00	1.00	1.00	1.00
FinalVolume:	91	433	9	142	777	52	86	74	55	3	64	155
Saturation Flow Module:												
Sat/Lane:	1900	1900	1900	1900	1900	1900	1900	1900	1900	1900	1900	1900
Adjustment:	0.95	0.95	0.95	0.95	0.94	0.94	0.76	0.76	0.76	0.90	0.90	0.90
Lanes:	1.00	1.96	0.04	1.00	1.87	0.13	0.40	0.34	0.26	0.01	0.29	0.70
Final Sat.:	1805	3526	73	1805	3353	224	576	495	368	23	495	1198
Capacity Analysis Module:												
Vol/Sat:	0.05	0.12	0.12	0.08	0.23	0.23	0.15	0.15	0.15	0.13	0.13	0.13
Crit Moves:	****				****			****				
Green/Cycle:	0.12	0.40	0.40	0.26	0.54	0.54	0.35	0.35	0.35	0.35	0.35	0.35
Volume/Cap:	0.43	0.31	0.31	0.31	0.43	0.43	0.43	0.43	0.43	0.37	0.37	0.37
Delay/Veh:	42.5	20.7	20.7	30.5	14.1	14.1	25.7	25.7	25.7	24.9	24.9	24.9
User DelAdj:	1.00	1.00	1.00	1.00	1.00	1.00	1.00	1.00	1.00	1.00	1.00	1.00
AdjDel/Veh:	42.5	20.7	20.7	30.5	14.1	14.1	25.7	25.7	25.7	24.9	24.9	24.9
LOS by Move:	D	C	C	C	B	B	C	C	C	C	C	C
HCM2kAvgQ:	3	5	5	4	8	8	5	5	5	5	5	5

Note: Queue reported is the number of cars per lane.

City of Murrieta General Plan
Existing
AM Peak Hour

Level Of Service Computation Report
2000 HCM 4-Way Stop Method (Base Volume Alternative)

Intersection #4 Antelope Road & Keller Road

Cycle (sec):	100	Critical Vol./Cap.(X):	0.449
Loss Time (sec):	0 (Y+R=4.0 sec)	Average Delay (sec/veh):	10.4
Optimal Cycle:	0	Level Of Service:	B

Street Name:	Antelope Road						Keller Road					
Approach:	North Bound			South Bound			East Bound			West Bound		
Movement:	L - T - R			L - T - R			L - T - R			L - T - R		
Control:	Stop Sign			Stop Sign			Stop Sign			Stop Sign		
Rights:	Include			Include			Include			Include		
Min. Green:	0	0	0	0	0	0	0	0	0	0	0	0
Lanes:	0 0	1!	0 0	0 0	1!	0 0	0 0	1!	0 0	0 0	1!	0 0
Volume Module:												
Base Vol:	6	112	110	18	115	9	8	2	8	270	17	29
Growth Adj:	1.00	1.00	1.00	1.00	1.00	1.00	1.00	1.00	1.00	1.00	1.00	1.00
Initial Bse:	6	112	110	18	115	9	8	2	8	270	17	29
User Adj:	1.00	1.00	1.00	1.00	1.00	1.00	1.00	1.00	1.00	1.00	1.00	1.00
PHF Adj:	1.00	1.00	1.00	1.00	1.00	1.00	1.00	1.00	1.00	1.00	1.00	1.00
PHF Volume:	6	112	110	18	115	9	8	2	8	270	17	29
Reduct Vol:	0	0	0	0	0	0	0	0	0	0	0	0
Reduced Vol:	6	112	110	18	115	9	8	2	8	270	17	29
PCE Adj:	1.00	1.00	1.00	1.00	1.00	1.00	1.00	1.00	1.00	1.00	1.00	1.00
MLF Adj:	1.00	1.00	1.00	1.00	1.00	1.00	1.00	1.00	1.00	1.00	1.00	1.00
FinalVolume:	6	112	110	18	115	9	8	2	8	270	17	29
Saturation Flow Module:												
Adjustment:	1.00	1.00	1.00	1.00	1.00	1.00	1.00	1.00	1.00	1.00	1.00	1.00
Lanes:	0.03	0.49	0.48	0.13	0.81	0.06	0.45	0.11	0.44	0.86	0.05	0.09
Final Sat.:	19	361	355	86	549	43	289	72	289	602	38	65
Capacity Analysis Module:												
Vol/Sat:	0.31	0.31	0.31	0.21	0.21	0.21	0.03	0.03	0.03	0.45	0.45	0.45
Crit Moves:		****			****			****			****	
Delay/Veh:	9.6	9.6	9.6	9.2	9.2	9.2	8.1	8.1	8.1	11.6	11.6	11.6
Delay Adj:	1.00	1.00	1.00	1.00	1.00	1.00	1.00	1.00	1.00	1.00	1.00	1.00
AdjDel/Veh:	9.6	9.6	9.6	9.2	9.2	9.2	8.1	8.1	8.1	11.6	11.6	11.6
LOS by Move:	A	A	A	A	A	A	A	A	A	B	B	B
ApproachDel:	9.6			9.2			8.1			11.6		
Delay Adj:	1.00			1.00			1.00			1.00		
ApprAdjDel:	9.6			9.2			8.1			11.6		
LOS by Appr:	A			A			A			B		
AllWayAvgQ:	0.4	0.4	0.4	0.2	0.2	0.2	0.0	0.0	0.0	0.7	0.7	0.7

Note: Queue reported is the number of cars per lane.

City of Murrieta General Plan
Existing
AM Peak Hour

Level Of Service Computation Report
2000 HCM 4-Way Stop Method (Base Volume Alternative)

Intersection #5 Menifee Road - Meadowlark Road & Keller Road

Cycle (sec): 100 Critical Vol./Cap.(X): 0.158
Loss Time (sec): 0 (Y+R=4.0 sec) Average Delay (sec/veh): 8.1
Optimal Cycle: 0 Level Of Service: A

Street Name:	Menifee Road - Meadowlark Road						Keller Road					
Approach:	North Bound			South Bound			East Bound			West Bound		
Movement:	L	- T	- R	L	- T	- R	L	- T	- R	L	- T	- R
Control:	Stop Sign			Stop Sign			Stop Sign			Stop Sign		
Rights:	Include			Include			Include			Include		
Min. Green:	0	0	0	0	0	0	0	0	0	0	0	0
Lanes:	0 0	0 0	0	1 0	0 0	1	1 0	1 0	0	1 0	1 0	1
Volume Module:												
Base Vol:	0	0	0	11	0	121	105	19	0	0	31	10
Growth Adj:	1.00	1.00	1.00	1.00	1.00	1.00	1.00	1.00	1.00	1.00	1.00	1.00
Initial Bse:	0	0	0	11	0	121	105	19	0	0	31	10
User Adj:	1.00	1.00	1.00	1.00	1.00	1.00	1.00	1.00	1.00	1.00	1.00	1.00
PHF Adj:	1.00	1.00	1.00	1.00	1.00	1.00	1.00	1.00	1.00	1.00	1.00	1.00
PHF Volume:	0	0	0	11	0	121	105	19	0	0	31	10
Reduct Vol:	0	0	0	0	0	0	0	0	0	0	0	0
Reduced Vol:	0	0	0	11	0	121	105	19	0	0	31	10
PCE Adj:	1.00	1.00	1.00	1.00	1.00	1.00	1.00	1.00	1.00	1.00	1.00	1.00
MLF Adj:	1.00	1.00	1.00	1.00	1.00	1.00	1.00	1.00	1.00	1.00	1.00	1.00
FinalVolume:	0	0	0	11	0	121	105	19	0	0	31	10
Saturation Flow Module:												
Adjustment:	1.00	1.00	1.00	1.00	1.00	1.00	1.00	1.00	1.00	1.00	1.00	1.00
Lanes:	0.00	0.00	0.00	1.00	0.00	1.00	1.00	1.00	0.00	1.00	1.00	1.00
Final Sat.:	0	0	0	649	0	829	663	730	0	627	688	793
Capacity Analysis Module:												
Vol/Sat:	xxxx	xxxx	xxxx	0.02	xxxx	0.15	0.16	0.03	xxxx	0.00	0.05	0.01
Crit Moves:						****	****				****	
Delay/Veh:	0.0	0.0	0.0	8.2	0.0	7.6	9.0	7.6	0.0	0.0	8.0	7.1
Delay Adj:	1.00	1.00	1.00	1.00	1.00	1.00	1.00	1.00	1.00	1.00	1.00	1.00
AdjDel/Veh:	0.0	0.0	0.0	8.2	0.0	7.6	9.0	7.6	0.0	0.0	8.0	7.1
LOS by Move:	*	*	*	A	*	A	A	A	*	*	A	A
ApproachDel:	xxxxxx			7.7			8.8			7.8		
Delay Adj:	xxxxx			1.00			1.00			1.00		
ApprAdjDel:	xxxxxx			7.7			8.8			7.8		
LOS by Appr:	*			A			A			A		
AllWayAvgQ:	0.0	0.0	0.0	0.0	0.0	0.2	0.2	0.0	0.0	0.0	0.0	0.0

Note: Queue reported is the number of cars per lane.

City of Murrieta General Plan
Existing
AM Peak Hour

Level Of Service Computation Report
2000 HCM Unsignalized Method (Base Volume Alternative)

Intersection #7 Leon Road & Keller Road

Average Delay (sec/veh): 0.2 Worst Case Level Of Service: B[10.2]

Street Name:	Leon Road						Keller Road					
Approach:	North Bound			South Bound			East Bound			West Bound		
Movement:	L	- T	- R	L	- T	- R	L	- T	- R	L	- T	- R
Control:	Uncontrolled			Uncontrolled			Stop Sign			Stop Sign		
Rights:	Include			Include			Include			Include		
Lanes:	0 0	1 0	0	0 1	0 0	0	0 0	1! 0	0	0 0	1! 0	0
Volume Module:												
Base Vol:	0	238	0	4	244	0	0	0	0	1	1	6
Growth Adj:	1.00	1.00	1.00	1.00	1.00	1.00	1.00	1.00	1.00	1.00	1.00	1.00
Initial Bse:	0	238	0	4	244	0	0	0	0	1	1	6
User Adj:	1.00	1.00	1.00	1.00	1.00	1.00	1.00	1.00	1.00	1.00	1.00	1.00
PHF Adj:	1.00	1.00	1.00	1.00	1.00	1.00	1.00	1.00	1.00	1.00	1.00	1.00
PHF Volume:	0	238	0	4	244	0	0	0	0	1	1	6
Reduct Vol:	0	0	0	0	0	0	0	0	0	0	0	0
FinalVolume:	0	238	0	4	244	0	0	0	0	1	1	6
Critical Gap Module:												
Critical Gp:	xxxxx	xxxx	xxxxx	4.1	xxxx	xxxxx	7.1	6.5	6.2	6.4	6.5	6.2
FollowUpTim:	xxxxx	xxxx	xxxxx	2.2	xxxx	xxxxx	3.5	4.0	3.3	3.5	4.0	3.3
Capacity Module:												
Cnflict Vol:	xxxx	xxxx	xxxxx	238	xxxx	xxxxx	494	490	244	490	490	238
Potent Cap.:	xxxx	xxxx	xxxxx	1341	xxxx	xxxxx	489	482	800	541	482	806
Move Cap.:	xxxx	xxxx	xxxxx	1341	xxxx	xxxxx	484	480	800	540	480	806
Volume/Cap:	xxxx	xxxx	xxxx	0.00	xxxx	xxxx	0.00	0.00	0.00	0.00	0.00	0.01
Level Of Service Module:												
2Way95thQ:	xxxx	xxxx	xxxxx	0.0	xxxx	xxxxx	xxxx	xxxx	xxxxx	xxxx	xxxx	xxxxx
Control Del:	xxxxx	xxxx	xxxxx	7.7	xxxx	xxxxx	xxxxx	xxxx	xxxxx	xxxxx	xxxx	xxxxx
LOS by Move:	*	*	*	A	*	*	*	*	*	*	*	*
Movement:	LT -	LTR -	RT	LT -	LTR -	RT	LT -	LTR -	RT	LT -	LTR -	RT
Shared Cap.:	xxxx	xxxx	xxxxx	xxxx	xxxx	xxxxx	xxxx	0	xxxxx	xxxx	703	xxxxx
SharedQueue:	xxxxx	xxxx	xxxxx	0.0	xxxx	xxxxx	xxxxx	xxxx	xxxxx	xxxxx	0.0	xxxxx
Shrd ConDel:	xxxxx	xxxx	xxxxx	7.7	xxxx	xxxxx	xxxxx	xxxx	xxxxx	xxxxx	10.2	xxxxx
Shared LOS:	*	*	*	A	*	*	*	*	*	*	B	*
ApproachDel:	xxxxxx			xxxxxx			xxxxxx			10.2		
ApproachLOS:	*			*			*			B		

Note: Queue reported is the number of cars per lane.

City of Murrieta General Plan
Existing
AM Peak Hour

Level Of Service Computation Report
2000 HCM Unsignalized Method (Base Volume Alternative)

Intersection #8 Winchester Road - SR-79 & Keller Road

Average Delay (sec/veh): 0.0 Worst Case Level Of Service: B[14.2]

Street Name:	Winchester Road - SR-79									Keller Road							
Approach:	North Bound					South Bound				East Bound					West Bound		
Movement:	L	-	T	-	R	L	-	T	-	R	L	-	T	-	R	L	-	T	-	R	L	-	T	-	R
Control:	Uncontrolled					Uncontrolled					Stop Sign					Stop Sign				
Rights:	Include					Include					Include					Include				
Lanes:	0	0	1	0	0	0	0	1	0	0	0	0	0	0	1	0	0	1!	0	0
Volume Module:																				
Base Vol:	0	502	0	0	793	0	0	0	0	1	0	0	0	0	0	0	0	0	0	0
Growth Adj:	1.00	1.00	1.00	1.00	1.00	1.00	1.00	1.00	1.00	1.00	1.00	1.00	1.00	1.00	1.00	1.00	1.00	1.00	1.00	1.00
Initial Bse:	0	502	0	0	793	0	0	0	0	1	0	0	0	0	0	0	0	0	0	0
User Adj:	1.00	1.00	1.00	1.00	1.00	1.00	1.00	1.00	1.00	1.00	1.00	1.00	1.00	1.00	1.00	1.00	1.00	1.00	1.00	1.00
PHF Adj:	1.00	1.00	1.00	1.00	1.00	1.00	1.00	1.00	1.00	1.00	1.00	1.00	1.00	1.00	1.00	1.00	1.00	1.00	1.00	1.00
PHF Volume:	0	502	0	0	793	0	0	0	0	1	0	0	0	0	0	0	0	0	0	0
Reduct Vol:	0	0	0	0	0	0	0	0	0	0	0	0	0	0	0	0	0	0	0	0
FinalVolume:	0	502	0	0	793	0	0	0	0	1	0	0	0	0	0	0	0	0	0	0
Critical Gap Module:																				
Critical Gp:	xxxxx	xxxx	xxxxx	xxxxx	xxxx	xxxxx	xxxxx	xxxx	6.2	7.1	6.5	6.2								
FollowUpTim:	xxxxx	xxxx	xxxxx	xxxxx	xxxx	xxxxx	xxxxx	xxxx	3.3	3.5	4.0	3.3								
Capacity Module:																				
Cnflict Vol:	xxxx	xxxx	xxxxx	xxxx	xxxx	xxxxx	xxxx	xxxx	793	1296	1295	502								
Potent Cap.:	xxxx	xxxx	xxxxx	xxxx	xxxx	xxxxx	xxxx	xxxx	392	141	164	573								
Move Cap.:	xxxx	xxxx	xxxxx	xxxx	xxxx	xxxxx	xxxx	xxxx	392	140	164	573								
Volume/Cap:	xxxx	xxxx	xxxx	xxxx	xxxx	xxxx	xxxx	xxxx	0.00	0.00	0.00	0.00								
Level Of Service Module:																				
2Way95thQ:	xxxx	xxxx	xxxxx	xxxx	xxxx	xxxxx	xxxx	xxxx	0.0	xxxx	xxxx	xxxxx								
Control Del:	xxxxx	xxxx	xxxxx	xxxxx	xxxx	xxxxx	xxxxx	xxxx	14.2	xxxxx	xxxx	xxxxx								
LOS by Move:	*	*	*	*	*	*	*	*	B	*	*	*								
Movement:	LT - LTR - RT					LT - LTR - RT					LT - LTR - RT					LT - LTR - RT				
Shared Cap.:	xxxx	xxxx	xxxxx	xxxx	xxxx	xxxxx	xxxx	xxxx	xxxxx	xxxx	0	xxxxx								
SharedQueue:	xxxxx	xxxx	xxxxx	xxxxx	xxxx	xxxxx	xxxxx	xxxx	xxxxx	xxxxx	xxxx	xxxxx								
Shrd ConDel:	xxxxx	xxxx	xxxxx	xxxxx	xxxx	xxxxx	xxxxx	xxxx	xxxxx	xxxxx	xxxx	xxxxx								
Shared LOS:	*	*	*	*	*	*	*	*	*	*	*	*								
ApproachDel:	xxxxxx			xxxxxx				14.2			xxxxxx									
ApproachLOS:	*			*				B			*									

Note: Queue reported is the number of cars per lane.

City of Murrieta General Plan
Existing
AM Peak Hour

Level Of Service Computation Report
2000 HCM Unsignalized Method (Base Volume Alternative)

Intersection #12 Leon Road & Jean Nicholas

Average Delay (sec/veh): 2.1 Worst Case Level Of Service: B[10.7]

Street Name:	Leon Road									Jean Nicholas							
Approach:	North Bound					South Bound				East Bound					West Bound		
Movement:	L	-	T	-	R	L	-	T	-	R	L	-	T	-	R	L	-	T	-	R	L	-	T	-	R
Control:	Uncontrolled					Uncontrolled					Stop Sign					Stop Sign				
Rights:	Include					Include					Include					Include				
Lanes:	0	0	1	0	1	1	0	1	0	0	0	0	0	0	0	0	0	1!	0	0
Volume Module:																				
Base Vol:	0	208	15	16	230	0	0	0	0	0	27	0	71							
Growth Adj:	1.00	1.00	1.00	1.00	1.00	1.00	1.00	1.00	1.00	1.00	1.00	1.00	1.00							
Initial Bse:	0	208	15	16	230	0	0	0	0	0	27	0	71							
User Adj:	1.00	1.00	1.00	1.00	1.00	1.00	1.00	1.00	1.00	1.00	1.00	1.00	1.00							
PHF Adj:	1.00	1.00	1.00	1.00	1.00	1.00	1.00	1.00	1.00	1.00	1.00	1.00	1.00							
PHF Volume:	0	208	15	16	230	0	0	0	0	0	27	0	71							
Reduct Vol:	0	0	0	0	0	0	0	0	0	0	0	0	0							
FinalVolume:	0	208	15	16	230	0	0	0	0	0	27	0	71							
Critical Gap Module:																				
Critical Gp:	xxxxx	xxxx	xxxxx	4.1	xxxx	xxxxx	xxxxx	xxxx	xxxxx	6.4	6.5	6.2								
FollowUpTim:	xxxxx	xxxx	xxxxx	2.2	xxxx	xxxxx	xxxxx	xxxx	xxxxx	3.5	4.0	3.3								
Capacity Module:																				
Cnflict Vol:	xxxx	xxxx	xxxxx	223	xxxx	xxxxx	xxxx	xxxx	xxxxx	470	470	208								
Potent Cap.:	xxxx	xxxx	xxxxx	1358	xxxx	xxxxx	xxxx	xxxx	xxxxx	556	495	837								
Move Cap.:	xxxx	xxxx	xxxxx	1358	xxxx	xxxxx	xxxx	xxxx	xxxxx	551	489	837								
Volume/Cap:	xxxx	xxxx	xxxx	0.01	xxxx	xxxx	xxxx	xxxx	xxxx	0.05	0.00	0.08								
Level Of Service Module:																				
2Way95thQ:	xxxx	xxxx	xxxxx	0.0	xxxx	xxxxx	xxxx	xxxx	xxxxx	xxxx	xxxx	xxxxx								
Control Del:	xxxxx	xxxx	xxxxx	7.7	xxxx	xxxxx	xxxxx	xxxx	xxxxx	xxxxx	xxxx	xxxxx								
LOS by Move:	*	*	*	A	*	*	*	*	*	*	*	*								
Movement:	LT - LTR - RT					LT - LTR - RT					LT - LTR - RT					LT - LTR - RT				
Shared Cap.:	xxxx	xxxx	xxxxx	xxxx	xxxx	xxxxx	xxxx	xxxx	xxxxx	xxxx	732	xxxxx								
SharedQueue:	xxxxx	xxxx	xxxxx	xxxxx	xxxx	xxxxx	xxxxx	xxxx	xxxxx	xxxxx	0.5	xxxxx								
Shrd ConDel:	xxxxx	xxxx	xxxxx	xxxxx	xxxx	xxxxx	xxxxx	xxxx	xxxxx	xxxxx	10.7	xxxxx								
Shared LOS:	*	*	*	*	*	*	*	*	*	*	B	*								
ApproachDel:	xxxxxx			xxxxxx				xxxxxx			10.7									
ApproachLOS:	*			*				*			B									

Note: Queue reported is the number of cars per lane.

City of Murrieta General Plan
Existing
AM Peak Hour

Level Of Service Computation Report
2000 HCM Operations Method (Base Volume Alternative)

Intersection #13 Winchester Road - SR-79 & Nicholas - Skyview

Cycle (sec): 100 Critical Vol./Cap.(X): 0.321
Loss Time (sec): 0 (Y+R=4.0 sec) Average Delay (sec/veh): 4.0
Optimal Cycle: 34 Level Of Service: A

Street Name:	Winchester Road - SR-79						Nicholas - Skyview					
Approach:	North Bound			South Bound			East Bound			West Bound		
Movement:	L - T - R			L - T - R			L - T - R			L - T - R		
Control:	Protected			Protected			Protected			Protected		
Rights:	Include			Include			Include			Include		
Min. Green:	0	0	0	0	0	0	0	0	0	0	0	0
Lanes:	1	0	2 0 1	1	0	1 1 0	1	0	1 1 0	1	0	1 0 1
Volume Module:												
Base Vol:	48	474	0	0	953	35	26	0	29	0	0	0
Growth Adj:	1.00	1.00	1.00	1.00	1.00	1.00	1.00	1.00	1.00	1.00	1.00	1.00
Initial Bse:	48	474	0	0	953	35	26	0	29	0	0	0
User Adj:	1.00	1.00	1.00	1.00	1.00	1.00	1.00	1.00	1.00	1.00	1.00	1.00
PHF Adj:	1.00	1.00	1.00	1.00	1.00	1.00	1.00	1.00	1.00	1.00	1.00	1.00
PHF Volume:	48	474	0	0	953	35	26	0	29	0	0	0
Reduct Vol:	0	0	0	0	0	0	0	0	0	0	0	0
Reduced Vol:	48	474	0	0	953	35	26	0	29	0	0	0
PCE Adj:	1.00	1.00	1.00	1.00	1.00	1.00	1.00	1.00	1.00	1.00	1.00	1.00
MLF Adj:	1.00	1.00	1.00	1.00	1.00	1.00	1.00	1.00	1.00	1.00	1.00	1.00
FinalVolume:	48	474	0	0	953	35	26	0	29	0	0	0
Saturation Flow Module:												
Sat/Lane:	1900	1900	1900	1900	1900	1900	1900	1900	1900	1900	1900	1900
Adjustment:	0.95	0.95	1.00	1.00	0.95	0.95	0.95	0.95	0.81	1.00	1.00	1.00
Lanes:	1.00	2.00	1.00	1.00	1.93	0.07	1.00	1.00	1.00	1.00	1.00	1.00
Final Sat.:	1805	3610	1900	1900	3465	127	1805	1805	1534	1900	1900	1900
Capacity Analysis Module:												
Vol/Sat:	0.03	0.13	0.00	0.00	0.28	0.28	0.01	0.00	0.02	0.00	0.00	0.00
Crit Moves:	****				****				****			
Green/Cycle:	0.08	0.94	0.00	0.00	0.86	0.86	0.06	0.00	0.06	0.00	0.00	0.00
Volume/Cap:	0.32	0.14	0.00	0.00	0.32	0.32	0.24	0.00	0.32	0.00	0.00	0.00
Delay/Veh:	44.4	0.2	0.0	0.0	1.4	1.4	46.1	0.0	47.2	0.0	0.0	0.0
User DelAdj:	1.00	1.00	1.00	1.00	1.00	1.00	1.00	1.00	1.00	1.00	1.00	1.00
AdjDel/Veh:	44.4	0.2	0.0	0.0	1.4	1.4	46.1	0.0	47.2	0.0	0.0	0.0
LOS by Move:	D	A	A	A	A	A	D	A	D	A	A	A
HCM2kAvgQ:	2	1	0	0	3	3	1	0	1	0	0	0

Note: Queue reported is the number of cars per lane.

City of Murrieta General Plan
Existing
AM Peak Hour

Level Of Service Computation Report
2000 HCM Operations Method (Base Volume Alternative)

Intersection #16 Leon Road & Max Gillis Road

Cycle (sec): 100 Critical Vol./Cap.(X): 0.310
Loss Time (sec): 0 (Y+R=4.0 sec) Average Delay (sec/veh): 24.6
Optimal Cycle: 33 Level Of Service: C

Street Name:	Leon Road						Max Gillis Road					
Approach:	North Bound			South Bound			East Bound			West Bound		
Movement:	L - T - R			L - T - R			L - T - R			L - T - R		
Control:	Protected			Protected			Protected			Protected		
Rights:	Include			Include			Include			Include		
Min. Green:	0	0	0	0	0	0	0	0	0	0	0	0
Lanes:	2	0	2 0 1	2	0	1 1 0	2	0	1 1 0	2	0	1 1 0
Volume Module:												
Base Vol:	173	30	101	196	43	127	91	387	146	96	345	132
Growth Adj:	1.00	1.00	1.00	1.00	1.00	1.00	1.00	1.00	1.00	1.00	1.00	1.00
Initial Bse:	173	30	101	196	43	127	91	387	146	96	345	132
User Adj:	1.00	1.00	1.00	1.00	1.00	1.00	1.00	1.00	1.00	1.00	1.00	1.00
PHF Adj:	1.00	1.00	1.00	1.00	1.00	1.00	1.00	1.00	1.00	1.00	1.00	1.00
PHF Volume:	173	30	101	196	43	127	91	387	146	96	345	132
Reduct Vol:	0	0	0	0	0	0	0	0	0	0	0	0
Reduced Vol:	173	30	101	196	43	127	91	387	146	96	345	132
PCE Adj:	1.00	1.00	1.00	1.00	1.00	1.00	1.00	1.00	1.00	1.00	1.00	1.00
MLF Adj:	1.00	1.00	1.00	1.00	1.00	1.00	1.00	1.00	1.00	1.00	1.00	1.00
FinalVolume:	173	30	101	196	43	127	91	387	146	96	345	132
Saturation Flow Module:												
Sat/Lane:	1900	1900	1900	1900	1900	1900	1900	1900	1900	1900	1900	1900
Adjustment:	0.92	0.95	0.85	0.92	0.84	0.84	0.92	0.91	0.91	0.92	0.91	0.91
Lanes:	2.00	2.00	1.00	2.00	1.00	1.00	2.00	1.45	0.55	2.00	1.45	0.55
Final Sat.:	3502	3610	1615	3502	1603	1603	3502	2514	948	3502	2501	957
Capacity Analysis Module:												
Vol/Sat:	0.05	0.01	0.06	0.06	0.03	0.08	0.03	0.15	0.15	0.03	0.14	0.14
Crit Moves:	****					****		****		****		
Green/Cycle:	0.16	0.22	0.22	0.20	0.26	0.26	0.09	0.50	0.50	0.09	0.49	0.49
Volume/Cap:	0.31	0.04	0.29	0.29	0.10	0.31	0.28	0.31	0.31	0.31	0.28	0.28
Delay/Veh:	37.5	30.8	33.0	34.5	28.5	30.4	42.7	15.1	15.1	43.3	15.0	15.0
User DelAdj:	1.00	1.00	1.00	1.00	1.00	1.00	1.00	1.00	1.00	1.00	1.00	1.00
AdjDel/Veh:	37.5	30.8	33.0	34.5	28.5	30.4	42.7	15.1	15.1	43.3	15.0	15.0
LOS by Move:	D	C	C	C	C	C	D	B	B	D	B	B
HCM2kAvgQ:	3	0	3	3	1	3	2	5	5	2	4	4

Note: Queue reported is the number of cars per lane.

City of Murrieta General Plan
Existing
AM Peak Hour

Level Of Service Computation Report
2000 HCM Operations Method (Base Volume Alternative)

Intersection #17 Winchester Road - SR-79 & Max Gillis - Thompson

Cycle (sec): 100 Critical Vol./Cap.(X): 0.870
Loss Time (sec): 0 (Y+R=4.0 sec) Average Delay (sec/veh): 37.1
Optimal Cycle: 175 Level Of Service: D

Street Name:	Winchester Road - SR-79						Max Gillis - Thompson					
Approach:	North Bound			South Bound			East Bound			West Bound		
Movement:	L - T - R			L - T - R			L - T - R			L - T - R		
Control:	Protected			Protected			Protected			Protected		
Rights:	Include			Include			Include			Include		
Min. Green:	0	0	0	0	0	0	0	0	0	0	0	0
Lanes:	1 0	1	1 0	1 0	2	0 1	1 0	1	0 1	1 0	1	0 1
Volume Module:												
Base Vol:	358	496	115	12	972	45	33	58	508	158	212	6
Growth Adj:	1.00	1.00	1.00	1.00	1.00	1.00	1.00	1.00	1.00	1.00	1.00	1.00
Initial Bse:	358	496	115	12	972	45	33	58	508	158	212	6
User Adj:	1.00	1.00	1.00	1.00	1.00	1.00	1.00	1.00	1.00	1.00	1.00	1.00
PHF Adj:	1.00	1.00	1.00	1.00	1.00	1.00	1.00	1.00	1.00	1.00	1.00	1.00
PHF Volume:	358	496	115	12	972	45	33	58	508	158	212	6
Reduct Vol:	0	0	0	0	0	0	0	0	0	0	0	0
Reduced Vol:	358	496	115	12	972	45	33	58	508	158	212	6
PCE Adj:	1.00	1.00	1.00	1.00	1.00	1.00	1.00	1.00	1.00	1.00	1.00	1.00
MLF Adj:	1.00	1.00	1.00	1.00	1.00	1.00	1.00	1.00	1.00	1.00	1.00	1.00
FinalVolume:	358	496	115	12	972	45	33	58	508	158	212	6
Saturation Flow Module:												
Sat/Lane:	1900	1900	1900	1900	1900	1900	1900	1900	1900	1900	1900	1900
Adjustment:	0.95	0.92	0.92	0.95	0.95	0.85	0.95	1.00	0.85	0.95	1.00	0.85
Lanes:	1.00	1.62	0.38	1.00	2.00	1.00	1.00	1.00	1.00	1.00	1.00	1.00
Final Sat.:	1805	2848	660	1805	3610	1615	1805	1900	1615	1805	1900	1615
Capacity Analysis Module:												
Vol/Sat:	0.20	0.17	0.17	0.01	0.27	0.03	0.02	0.03	0.31	0.09	0.11	0.00
Crit Moves:	****				****				****	****		
Green/Cycle:	0.23	0.52	0.52	0.02	0.31	0.31	0.07	0.36	0.36	0.10	0.40	0.40
Volume/Cap:	0.87	0.34	0.34	0.34	0.87	0.09	0.28	0.08	0.87	0.87	0.28	0.01
Delay/Veh:	54.9	14.2	14.2	53.9	40.2	24.6	45.8	21.1	43.0	77.7	20.7	18.2
User DelAdj:	1.00	1.00	1.00	1.00	1.00	1.00	1.00	1.00	1.00	1.00	1.00	1.00
AdjDel/Veh:	54.9	14.2	14.2	53.9	40.2	24.6	45.8	21.1	43.0	77.7	20.7	18.2
LOS by Move:	D	B	B	D	D	C	D	C	D	E	C	B
HCM2kAvgQ:	14	6	6	1	18	1	1	1	18	8	4	0

Note: Queue reported is the number of cars per lane.

City of Murrieta General Plan
Existing
AM Peak Hour

Level Of Service Computation Report
2000 HCM Operations Method (Base Volume Alternative)

Intersection #18 California Oaks Road & Clinton Keith Road

Cycle (sec): 100 Critical Vol./Cap.(X): 0.545
Loss Time (sec): 0 (Y+R=4.0 sec) Average Delay (sec/veh): 21.7
Optimal Cycle: 41 Level Of Service: C

Street Name:	California Oaks Road						Clinton Keith Road					
Approach:	North Bound			South Bound			East Bound			West Bound		
Movement:	L - T - R			L - T - R			L - T - R			L - T - R		
Control:	Permitted			Permitted			Protected			Protected		
Rights:	Include			Include			Include			Include		
Min. Green:	0	0	0	0	0	0	0	0	0	0	0	0
Lanes:	1 0	1!	0 1	0 0	0	0 0	0 0	1	1 0	1 0	2	0 0
Volume Module:												
Base Vol:	111	0	339	0	0	0	0	493	113	437	508	0
Growth Adj:	1.00	1.00	1.00	1.00	1.00	1.00	1.00	1.00	1.00	1.00	1.00	1.00
Initial Bse:	111	0	339	0	0	0	0	493	113	437	508	0
User Adj:	1.00	1.00	1.00	1.00	1.00	1.00	1.00	1.00	1.00	1.00	1.00	1.00
PHF Adj:	1.00	1.00	1.00	1.00	1.00	1.00	1.00	1.00	1.00	1.00	1.00	1.00
PHF Volume:	111	0	339	0	0	0	0	493	113	437	508	0
Reduct Vol:	0	0	0	0	0	0	0	0	0	0	0	0
Reduced Vol:	111	0	339	0	0	0	0	493	113	437	508	0
PCE Adj:	1.00	1.00	1.00	1.00	1.00	1.00	1.00	1.00	1.00	1.00	1.00	1.00
MLF Adj:	1.00	1.00	1.00	1.00	1.00	1.00	1.00	1.00	1.00	1.00	1.00	1.00
FinalVolume:	111	0	339	0	0	0	0	493	113	437	508	0
Saturation Flow Module:												
Sat/Lane:	1900	1900	1900	1900	1900	1900	1900	1900	1900	1900	1900	1900
Adjustment:	0.78	1.00	0.78	1.00	1.00	1.00	1.00	0.92	0.92	0.95	0.95	1.00
Lanes:	1.25	0.00	1.75	0.00	0.00	0.00	0.00	1.63	0.37	1.00	2.00	0.00
Final Sat.:	1849	0	2600	0	0	0	0	2855	654	1805	3610	0
Capacity Analysis Module:												
Vol/Sat:	0.06	0.00	0.13	0.00	0.00	0.00	0.00	0.17	0.17	0.24	0.14	0.00
Crit Moves:			****					****		****		
Green/Cycle:	0.24	0.00	0.24	0.00	0.00	0.00	0.00	0.32	0.32	0.44	0.76	0.00
Volume/Cap:	0.25	0.00	0.55	0.00	0.00	0.00	0.00	0.55	0.55	0.55	0.18	0.00
Delay/Veh:	30.9	0.0	34.0	0.0	0.0	0.0	0.0	28.8	28.8	21.2	3.4	0.0
User DelAdj:	1.00	1.00	1.00	1.00	1.00	1.00	1.00	1.00	1.00	1.00	1.00	1.00
AdjDel/Veh:	30.9	0.0	34.0	0.0	0.0	0.0	0.0	28.8	28.8	21.2	3.4	0.0
LOS by Move:	C	A	C	A	A	A	A	C	C	C	A	A
HCM2kAvgQ:	2	0	6	0	0	0	0	8	8	10	2	0

Note: Queue reported is the number of cars per lane.

City of Murrieta General Plan
Existing
AM Peak Hour

Level Of Service Computation Report
2000 HCM Operations Method (Base Volume Alternative)

Intersection #19 I-215 SB Off-Ramp & Clinton Keith Road

Cycle (sec): 100 Critical Vol./Cap.(X): 0.770
Loss Time (sec): 0 (Y+R=4.0 sec) Average Delay (sec/veh): 23.9
Optimal Cycle: 81 Level Of Service: C

Street Name:	I-215 SB Off-Ramp						Clinton Keith Road					
Approach:	North Bound			South Bound			East Bound			West Bound		
Movement:	L -	T -	R	L -	T -	R	L -	T -	R	L -	T -	R
Control:	Permitted			Permitted			Protected			Protected		
Rights:	Include			Include			Include			Include		
Min. Green:	0	0	0	0	0	0	0	0	0	0	0	0
Lanes:	0 0	0	0	1 0	0	1 0	0 0	1	0 1	1 0	1	0 0
Volume Module:												
Base Vol:	0	0	0	88	2	388	0	786	514	207	368	0
Growth Adj:	1.00	1.00	1.00	1.00	1.00	1.00	1.00	1.00	1.00	1.00	1.00	1.00
Initial Bse:	0	0	0	88	2	388	0	786	514	207	368	0
User Adj:	1.00	1.00	1.00	1.00	1.00	1.00	1.00	1.00	1.00	1.00	1.00	1.00
PHF Adj:	1.00	1.00	1.00	1.00	1.00	1.00	1.00	1.00	1.00	1.00	1.00	1.00
PHF Volume:	0	0	0	88	2	388	0	786	514	207	368	0
Reduct Vol:	0	0	0	0	0	0	0	0	0	0	0	0
Reduced Vol:	0	0	0	88	2	388	0	786	514	207	368	0
PCE Adj:	1.00	1.00	1.00	1.00	1.00	1.00	1.00	1.00	1.00	1.00	1.00	1.00
MLF Adj:	1.00	1.00	1.00	1.00	1.00	1.00	1.00	1.00	1.00	1.00	1.00	1.00
FinalVolume:	0	0	0	88	2	388	0	786	514	207	368	0
Saturation Flow Module:												
Sat/Lane:	1900	1900	1900	1900	1900	1900	1900	1900	1900	1900	1900	1900
Adjustment:	1.00	1.00	1.00	0.85	0.85	0.85	1.00	1.00	0.85	0.95	1.00	1.00
Lanes:	0.00	0.00	0.00	1.00	0.01	0.99	0.00	1.00	1.00	1.00	1.00	0.00
Final Sat.:	0	0	0	1615	8	1609	0	1900	1615	1805	1900	0
Capacity Analysis Module:												
Vol/Sat:	0.00	0.00	0.00	0.05	0.24	0.24	0.00	0.41	0.32	0.11	0.19	0.00
Crit Moves:					****			****		****		
Green/Cycle:	0.00	0.00	0.00	0.31	0.31	0.31	0.00	0.54	0.54	0.15	0.69	0.00
Volume/Cap:	0.00	0.00	0.00	0.17	0.77	0.77	0.00	0.77	0.59	0.77	0.28	0.00
Delay/Veh:	0.0	0.0	0.0	25.1	38.1	38.1	0.0	21.9	16.8	53.6	6.2	0.0
User DelAdj:	1.00	1.00	1.00	1.00	1.00	1.00	1.00	1.00	1.00	1.00	1.00	1.00
AdjDel/Veh:	0.0	0.0	0.0	25.1	38.1	38.1	0.0	21.9	16.8	53.6	6.2	0.0
LOS by Move:	A	A	A	C	D	D	A	C	B	D	A	A
HCM2kAvgQ:	0	0	0	2	13	13	0	20	11	8	4	0

Note: Queue reported is the number of cars per lane.

City of Murrieta General Plan
Existing
AM Peak Hour

Level Of Service Computation Report
2000 HCM Operations Method (Base Volume Alternative)

Intersection #20 I-215 NB Off Ramp & Clinton Keith Road

Cycle (sec): 100 Critical Vol./Cap.(X): 0.745
Loss Time (sec): 0 (Y+R=4.0 sec) Average Delay (sec/veh): 26.2
Optimal Cycle: 73 Level Of Service: C

Street Name:	I-215 NB Off Ramp						Clinton Keith Road					
Approach:	North Bound			South Bound			East Bound			West Bound		
Movement:	L -	T -	R	L -	T -	R	L -	T -	R	L -	T -	R
Control:	Permitted			Permitted			Protected			Protected		
Rights:	Include			Include			Include			Include		
Min. Green:	0	0	0	0	0	0	0	0	0	0	0	0
Lanes:	0 0	1!	0 1	0 0	0	0 0	1 0	1	0 0	0 0	1	0 1
Volume Module:												
Base Vol:	128	0	432	0	0	0	467	486	0	0	489	100
Growth Adj:	1.00	1.00	1.00	1.00	1.00	1.00	1.00	1.00	1.00	1.00	1.00	1.00
Initial Bse:	128	0	432	0	0	0	467	486	0	0	489	100
User Adj:	1.00	1.00	1.00	1.00	1.00	1.00	1.00	1.00	1.00	1.00	1.00	1.00
PHF Adj:	1.00	1.00	1.00	1.00	1.00	1.00	1.00	1.00	1.00	1.00	1.00	1.00
PHF Volume:	128	0	432	0	0	0	467	486	0	0	489	100
Reduct Vol:	0	0	0	0	0	0	0	0	0	0	0	0
Reduced Vol:	128	0	432	0	0	0	467	486	0	0	489	100
PCE Adj:	1.00	1.00	1.00	1.00	1.00	1.00	1.00	1.00	1.00	1.00	1.00	1.00
MLF Adj:	1.00	1.00	1.00	1.00	1.00	1.00	1.00	1.00	1.00	1.00	1.00	1.00
FinalVolume:	128	0	432	0	0	0	467	486	0	0	489	100
Saturation Flow Module:												
Sat/Lane:	1900	1900	1900	1900	1900	1900	1900	1900	1900	1900	1900	1900
Adjustment:	0.82	1.00	0.78	1.00	1.00	1.00	0.95	1.00	1.00	1.00	1.00	0.85
Lanes:	0.36	0.00	1.64	0.00	0.00	0.00	1.00	1.00	0.00	0.00	1.00	1.00
Final Sat.:	560	0	2425	0	0	0	1805	1900	0	0	1900	1615
Capacity Analysis Module:												
Vol/Sat:	0.23	0.00	0.18	0.00	0.00	0.00	0.26	0.26	0.00	0.00	0.26	0.06
Crit Moves:	****						****				****	
Green/Cycle:	0.31	0.00	0.31	0.00	0.00	0.00	0.35	0.69	0.00	0.00	0.35	0.35
Volume/Cap:	0.74	0.00	0.58	0.00	0.00	0.00	0.74	0.37	0.00	0.00	0.74	0.18
Delay/Veh:	35.2	0.0	30.1	0.0	0.0	0.0	33.6	6.5	0.0	0.0	33.5	23.0
User DelAdj:	1.00	1.00	1.00	1.00	1.00	1.00	1.00	1.00	1.00	1.00	1.00	1.00
AdjDel/Veh:	35.2	0.0	30.1	0.0	0.0	0.0	33.6	6.5	0.0	0.0	33.5	23.0
LOS by Move:	D	A	C	A	A	A	C	A	A	A	C	C
HCM2kAvgQ:	11	0	7	0	0	0	14	6	0	0	15	2

Note: Queue reported is the number of cars per lane.

City of Murrieta General Plan
Existing
AM Peak Hour

Level Of Service Computation Report
2000 HCM 4-Way Stop Method (Base Volume Alternative)

Intersection #22 Meadowlark Lane - Whitewood Road & Clinton Keith Road

Cycle (sec): 100 Critical Vol./Cap.(X): 0.287
Loss Time (sec): 0 (Y+R=4.0 sec) Average Delay (sec/veh): 10.5
Optimal Cycle: 0 Level Of Service: B

Street Name:	Meadowlark Lane - Whitewood Road						Clinton Keith Road					
Approach:	North Bound			South Bound			East Bound			West Bound		
Movement:	L -	T -	R	L -	T -	R	L -	T -	R	L -	T -	R
Control:	Stop Sign			Stop Sign			Stop Sign			Stop Sign		
Rights:	Include			Include			Include			Include		
Min. Green:	0	0	0	0	0	0	0	0	0	0	0	0
Lanes:	1 0	0	1 0	1 0	1 0	1	0 1	0	0 1	0 0	1! 0	0
Volume Module:												
Base Vol:	154	76	30	0	161	141	136	4	173	34	7	1
Growth Adj:	1.00	1.00	1.00	1.00	1.00	1.00	1.00	1.00	1.00	1.00	1.00	1.00
Initial Bse:	154	76	30	0	161	141	136	4	173	34	7	1
User Adj:	1.00	1.00	1.00	1.00	1.00	1.00	1.00	1.00	1.00	1.00	1.00	1.00
PHF Adj:	1.00	1.00	1.00	1.00	1.00	1.00	1.00	1.00	1.00	1.00	1.00	1.00
PHF Volume:	154	76	30	0	161	141	136	4	173	34	7	1
Reduct Vol:	0	0	0	0	0	0	0	0	0	0	0	0
Reduced Vol:	154	76	30	0	161	141	136	4	173	34	7	1
PCE Adj:	1.00	1.00	1.00	1.00	1.00	1.00	1.00	1.00	1.00	1.00	1.00	1.00
MLF Adj:	1.00	1.00	1.00	1.00	1.00	1.00	1.00	1.00	1.00	1.00	1.00	1.00
FinalVolume:	154	76	30	0	161	141	136	4	173	34	7	1
Saturation Flow Module:												
Adjustment:	1.00	1.00	1.00	1.00	1.00	1.00	1.00	1.00	1.00	1.00	1.00	1.00
Lanes:	1.00	0.72	0.28	1.00	1.00	1.00	0.97	0.03	1.00	0.81	0.17	0.02
Final Sat.:	544	435	172	517	561	628	515	15	643	410	85	12
Capacity Analysis Module:												
Vol/Sat:	0.28	0.17	0.17	0.00	0.29	0.22	0.26	0.26	0.27	0.08	0.08	0.08
Crit Moves:	****				****				****		****	
Delay/Veh:	11.4	9.5	9.5	0.0	11.2	9.7	11.4	11.4	9.8	10.1	10.1	10.1
Delay Adj:	1.00	1.00	1.00	1.00	1.00	1.00	1.00	1.00	1.00	1.00	1.00	1.00
AdjDel/Veh:	11.4	9.5	9.5	0.0	11.2	9.7	11.4	11.4	9.8	10.1	10.1	10.1
LOS by Move:	B	A	A	*	B	A	B	B	A	B	B	B
ApproachDel:	10.6			10.5			10.5			10.1		
Delay Adj:	1.00			1.00			1.00			1.00		
ApprAdjDel:	10.6			10.5			10.5			10.1		
LOS by Appr:	B			B			B			B		
AllWayAvgQ:	0.4	0.2	0.2	0.0	0.4	0.3	0.3	0.3	0.3	0.1	0.1	0.1

Note: Queue reported is the number of cars per lane.

City of Murrieta General Plan
Existing
AM Peak Hour

Level Of Service Computation Report
2000 HCM Operations Method (Base Volume Alternative)

Intersection #25 Winchester Road - SR-79 & Benton Road

Cycle (sec): 100 Critical Vol./Cap.(X): 0.465
Loss Time (sec): 0 (Y+R=4.0 sec) Average Delay (sec/veh): 14.4
Optimal Cycle: 43 Level Of Service: B

Street Name:	Winchester Road - SR-79						Benton Road					
Approach:	North Bound			South Bound			East Bound			West Bound		
Movement:	L -	T -	R	L -	T -	R	L -	T -	R	L -	T -	R
Control:	Protected			Protected			Protected			Protected		
Rights:	Include			Include			Include			Include		
Min. Green:	0	0	0	0	0	0	0	0	0	0	0	0
Lanes:	0 0	2	0 1	1 0	2	0 0	0 0	0	0 0	2 0	0	0 1
Volume Module:												
Base Vol:	0	762	168	267	1369	0	0	0	0	301	0	142
Growth Adj:	1.00	1.00	1.00	1.00	1.00	1.00	1.00	1.00	1.00	1.00	1.00	1.00
Initial Bse:	0	762	168	267	1369	0	0	0	0	301	0	142
User Adj:	1.00	1.00	1.00	1.00	1.00	1.00	1.00	1.00	1.00	1.00	1.00	1.00
PHF Adj:	1.00	1.00	1.00	1.00	1.00	1.00	1.00	1.00	1.00	1.00	1.00	1.00
PHF Volume:	0	762	168	267	1369	0	0	0	0	301	0	142
Reduct Vol:	0	0	0	0	0	0	0	0	0	0	0	0
Reduced Vol:	0	762	168	267	1369	0	0	0	0	301	0	142
PCE Adj:	1.00	1.00	1.00	1.00	1.00	1.00	1.00	1.00	1.00	1.00	1.00	1.00
MLF Adj:	1.00	1.00	1.00	1.00	1.00	1.00	1.00	1.00	1.00	1.00	1.00	1.00
FinalVolume:	0	762	168	267	1369	0	0	0	0	301	0	142
Saturation Flow Module:												
Sat/Lane:	1900	1900	1900	1900	1900	1900	1900	1900	1900	1900	1900	1900
Adjustment:	1.00	0.95	0.85	0.95	0.95	1.00	1.00	1.00	1.00	0.92	1.00	0.85
Lanes:	0.00	2.00	1.00	1.00	2.00	0.00	0.00	0.00	0.00	2.00	0.00	1.00
Final Sat.:	0	3610	1615	1805	3610	0	0	0	0	3502	0	1615
Capacity Analysis Module:												
Vol/Sat:	0.00	0.21	0.10	0.15	0.38	0.00	0.00	0.00	0.00	0.09	0.00	0.09
Crit Moves:	****				****					****		
Green/Cycle:	0.00	0.48	0.48	0.34	0.82	0.00	0.00	0.00	0.00	0.18	0.00	0.18
Volume/Cap:	0.00	0.44	0.22	0.44	0.47	0.00	0.00	0.00	0.00	0.47	0.00	0.48
Delay/Veh:	0.0	17.4	15.3	26.4	2.9	0.0	0.0	0.0	0.0	36.9	0.0	37.6
User DelAdj:	1.00	1.00	1.00	1.00	1.00	1.00	1.00	1.00	1.00	1.00	1.00	1.00
AdjDel/Veh:	0.0	17.4	15.3	26.4	2.9	0.0	0.0	0.0	0.0	36.9	0.0	37.6
LOS by Move:	A	B	B	C	A	A	A	A	A	D	A	D
HCM2kAvgQ:	0	8	3	7	7	0	0	0	0	5	0	4

Note: Queue reported is the number of cars per lane.

City of Murrieta General Plan
Existing
AM Peak Hour

Level Of Service Computation Report
2000 HCM Operations Method (Base Volume Alternative)

Intersection #26 Winchester Road - SR-79 & Via Mira Mosa

Cycle (sec): 100 Critical Vol./Cap.(X): 0.600
Loss Time (sec): 0 (Y+R=4.0 sec) Average Delay (sec/veh): 14.2
Optimal Cycle: 57 Level Of Service: B

Street Name:	Winchester Road - SR-79									Via Mira Mosa		
Approach:	North Bound			South Bound			East Bound			West Bound		
Movement:	L - T - R			L - T - R			L - T - R			L - T - R		
Control:	Protected			Protected			Protected			Protected		
Rights:	Include			Include			Include			Include		
Min. Green:	0	0	0	0	0	0	0	0	0	0	0	0
Lanes:	1 0	2 0	1	1 0	1 1	0	1 0	0 1	0	1 0	0 1	0
Volume Module:												
Base Vol:	12	789	409	167	1540	104	128	18	37	184	16	28
Growth Adj:	1.00	1.00	1.00	1.00	1.00	1.00	1.00	1.00	1.00	1.00	1.00	1.00
Initial Bse:	12	789	409	167	1540	104	128	18	37	184	16	28
User Adj:	1.00	1.00	1.00	1.00	1.00	1.00	1.00	1.00	1.00	1.00	1.00	1.00
PHF Adj:	1.00	1.00	1.00	1.00	1.00	1.00	1.00	1.00	1.00	1.00	1.00	1.00
PHF Volume:	12	789	409	167	1540	104	128	18	37	184	16	28
Reduct Vol:	0	0	0	0	0	0	0	0	0	0	0	0
Reduced Vol:	12	789	409	167	1540	104	128	18	37	184	16	28
PCE Adj:	1.00	1.00	1.00	1.00	1.00	1.00	1.00	1.00	1.00	1.00	1.00	1.00
MLF Adj:	1.00	1.00	1.00	1.00	1.00	1.00	1.00	1.00	1.00	1.00	1.00	1.00
FinalVolume:	12	789	409	167	1540	104	128	18	37	184	16	28
Saturation Flow Module:												
Sat/Lane:	1900	1900	1900	1900	1900	1900	1900	1900	1900	1900	1900	1900
Adjustment:	0.95	0.95	0.85	0.95	0.94	0.94	0.95	0.90	0.90	0.95	0.91	0.91
Lanes:	1.00	2.00	1.00	1.00	1.87	0.13	1.00	0.33	0.67	1.00	0.36	0.64
Final Sat.:	1805	3610	1615	1805	3351	226	1805	559	1149	1805	625	1094
Capacity Analysis Module:												
Vol/Sat:	0.01	0.22	0.25	0.09	0.46	0.46	0.07	0.03	0.03	0.10	0.03	0.03
Crit Moves:	****				****			****		****		
Green/Cycle:	0.01	0.57	0.57	0.21	0.77	0.77	0.16	0.05	0.05	0.17	0.06	0.06
Volume/Cap:	0.60	0.38	0.45	0.45	0.60	0.60	0.43	0.60	0.60	0.60	0.43	0.43
Delay/Veh:	91.0	12.0	12.8	35.4	5.5	5.5	38.6	56.9	56.9	41.7	48.3	48.3
User DelAdj:	1.00	1.00	1.00	1.00	1.00	1.00	1.00	1.00	1.00	1.00	1.00	1.00
AdjDel/Veh:	91.0	12.0	12.8	35.4	5.5	5.5	38.6	56.9	56.9	41.7	48.3	48.3
LOS by Move:	F	B	B	D	A	A	D	E	E	D	D	D
HCM2kAvgQ:	1	7	7	5	12	12	4	3	3	6	2	2

Note: Queue reported is the number of cars per lane.

City of Murrieta General Plan
Existing
AM Peak Hour

Level Of Service Computation Report
2000 HCM Operations Method (Base Volume Alternative)

Intersection #27 Monroe Ave & Los Alamos

Cycle (sec): 100 Critical Vol./Cap.(X): 0.314
Loss Time (sec): 0 (Y+R=4.0 sec) Average Delay (sec/veh): 15.0
Optimal Cycle: 33 Level Of Service: B

Street Name:	Monroe Ave									Los Alamos		
Approach:	North Bound			South Bound			East Bound			West Bound		
Movement:	L - T - R			L - T - R			L - T - R			L - T - R		
Control:	Protected			Protected			Protected			Protected		
Rights:	Include			Include			Include			Include		
Min. Green:	0	0	0	0	0	0	0	0	0	0	0	0
Lanes:	0 0	0 0	0	2 0	0 0	1	1 0	2 0	0	0 0	2 0	1
Volume Module:												
Base Vol:	0	0	0	288	0	142	70	315	0	0	507	302
Growth Adj:	1.00	1.00	1.00	1.00	1.00	1.00	1.00	1.00	1.00	1.00	1.00	1.00
Initial Bse:	0	0	0	288	0	142	70	315	0	0	507	302
User Adj:	1.00	1.00	1.00	1.00	1.00	1.00	1.00	1.00	1.00	1.00	1.00	1.00
PHF Adj:	1.00	1.00	1.00	1.00	1.00	1.00	1.00	1.00	1.00	1.00	1.00	1.00
PHF Volume:	0	0	0	288	0	142	70	315	0	0	507	302
Reduct Vol:	0	0	0	0	0	0	0	0	0	0	0	0
Reduced Vol:	0	0	0	288	0	142	70	315	0	0	507	302
PCE Adj:	1.00	1.00	1.00	1.00	1.00	1.00	1.00	1.00	1.00	1.00	1.00	1.00
MLF Adj:	1.00	1.00	1.00	1.00	1.00	1.00	1.00	1.00	1.00	1.00	1.00	1.00
FinalVolume:	0	0	0	288	0	142	70	315	0	0	507	302
Saturation Flow Module:												
Sat/Lane:	1900	1900	1900	1900	1900	1900	1900	1900	1900	1900	1900	1900
Adjustment:	1.00	1.00	1.00	0.92	1.00	0.85	0.95	0.95	1.00	1.00	0.95	0.85
Lanes:	0.00	0.00	0.00	2.00	0.00	1.00	1.00	2.00	0.00	0.00	2.00	1.00
Final Sat.:	0	0	0	3502	0	1615	1805	3610	0	0	3610	1615
Capacity Analysis Module:												
Vol/Sat:	0.00	0.00	0.00	0.08	0.00	0.09	0.04	0.09	0.00	0.00	0.14	0.19
Crit Moves:						****	****					****
Green/Cycle:	0.00	0.00	0.00	0.28	0.00	0.28	0.12	0.72	0.00	0.00	0.60	0.60
Volume/Cap:	0.00	0.00	0.00	0.29	0.00	0.31	0.31	0.12	0.00	0.00	0.24	0.31
Delay/Veh:	0.0	0.0	0.0	28.4	0.0	28.8	40.8	4.3	0.0	0.0	9.5	10.2
User DelAdj:	1.00	1.00	1.00	1.00	1.00	1.00	1.00	1.00	1.00	1.00	1.00	1.00
AdjDel/Veh:	0.0	0.0	0.0	28.4	0.0	28.8	40.8	4.3	0.0	0.0	9.5	10.2
LOS by Move:	A	A	A	C	A	C	D	A	A	A	A	B
HCM2kAvgQ:	0	0	0	4	0	4	2	2	0	0	4	5

Note: Queue reported is the number of cars per lane.

City of Murrieta General Plan
Existing
AM Peak Hour

Level Of Service Computation Report
2000 HCM Operations Method (Base Volume Alternative)

Intersection #28 Jefferson Avenue & Murrieta Hot Springs Road

Cycle (sec): 100 Critical Vol./Cap.(X): 0.472
Loss Time (sec): 0 (Y+R=4.0 sec) Average Delay (sec/veh): 21.2
Optimal Cycle: 35 Level Of Service: C

Street Name:	Jefferson Avenue						Murrieta Hot Springs Road					
Approach:	North Bound			South Bound			East Bound			West Bound		
Movement:	L - T - R			L - T - R			L - T - R			L - T - R		
Control:	Protected			Protected			Permitted			Permitted		
Rights:	Include			Include			Include			Include		
Min. Green:	0	0	0	0	0	0	0	0	0	0	0	0
Lanes:	0 0	2	0 1	2 0	2	0 0	0 0	0	0 0	2 0	0	0 1
Volume Module:												
Base Vol:	0	203	185	226	555	0	0	0	0	652	0	190
Growth Adj:	1.00	1.00	1.00	1.00	1.00	1.00	1.00	1.00	1.00	1.00	1.00	1.00
Initial Bse:	0	203	185	226	555	0	0	0	0	652	0	190
User Adj:	1.00	1.00	1.00	1.00	1.00	1.00	1.00	1.00	1.00	1.00	1.00	1.00
PHF Adj:	1.00	1.00	1.00	1.00	1.00	1.00	1.00	1.00	1.00	1.00	1.00	1.00
PHF Volume:	0	203	185	226	555	0	0	0	0	652	0	190
Reduct Vol:	0	0	0	0	0	0	0	0	0	0	0	0
Reduced Vol:	0	203	185	226	555	0	0	0	0	652	0	190
PCE Adj:	1.00	1.00	1.00	1.00	1.00	1.00	1.00	1.00	1.00	1.00	1.00	1.00
MLF Adj:	1.00	1.00	1.00	1.00	1.00	1.00	1.00	1.00	1.00	1.00	1.00	1.00
FinalVolume:	0	203	185	226	555	0	0	0	0	652	0	190
Saturation Flow Module:												
Sat/Lane:	1900	1900	1900	1900	1900	1900	1900	1900	1900	1900	1900	1900
Adjustment:	1.00	0.95	0.85	0.92	0.95	1.00	1.00	1.00	1.00	0.59	1.00	0.85
Lanes:	0.00	2.00	1.00	2.00	2.00	0.00	0.00	0.00	0.00	2.00	0.00	1.00
Final Sat.:	0	3610	1615	3502	3610	0	0	0	0	2226	0	1615
Capacity Analysis Module:												
Vol/Sat:	0.00	0.06	0.11	0.06	0.15	0.00	0.00	0.00	0.00	0.29	0.00	0.12
Crit Moves:			****	****						****		
Green/Cycle:	0.00	0.24	0.24	0.14	0.38	0.00	0.00	0.00	0.00	0.62	0.00	0.62
Volume/Cap:	0.00	0.23	0.47	0.47	0.41	0.00	0.00	0.00	0.00	0.47	0.00	0.19
Delay/Veh:	0.0	30.5	33.3	40.6	22.9	0.0	0.0	0.0	0.0	10.4	0.0	8.3
User DelAdj:	1.00	1.00	1.00	1.00	1.00	1.00	1.00	1.00	1.00	1.00	1.00	1.00
AdjDel/Veh:	0.0	30.5	33.3	40.6	22.9	0.0	0.0	0.0	0.0	10.4	0.0	8.3
LOS by Move:	A	C	C	D	C	A	A	A	A	B	A	A
HCM2kAvgQ:	0	3	5	4	7	0	0	0	0	6	0	3

Note: Queue reported is the number of cars per lane.

City of Murrieta General Plan
Existing
AM Peak Hour

Level Of Service Computation Report
2000 HCM Operations Method (Base Volume Alternative)

Intersection #29 Madison Avenue & Murrieta Hot Springs Road

Cycle (sec): 100 Critical Vol./Cap.(X): 0.307
Loss Time (sec): 0 (Y+R=4.0 sec) Average Delay (sec/veh): 25.3
Optimal Cycle: 33 Level Of Service: C

Street Name:	Madison Avenue						Murrieta Hot Springs Road					
Approach:	North Bound			South Bound			East Bound			West Bound		
Movement:	L - T - R			L - T - R			L - T - R			L - T - R		
Control:	Protected			Protected			Protected			Protected		
Rights:	Include			Include			Include			Include		
Min. Green:	0	0	0	0	0	0	0	0	0	0	0	0
Lanes:	2 0	2	0 1	2 0	1	1 0	2 0	3	1 0	2 0	3	0 1
Volume Module:												
Base Vol:	28	63	147	210	120	87	68	318	43	354	710	127
Growth Adj:	1.00	1.00	1.00	1.00	1.00	1.00	1.00	1.00	1.00	1.00	1.00	1.00
Initial Bse:	28	63	147	210	120	87	68	318	43	354	710	127
User Adj:	1.00	1.00	1.00	1.00	1.00	1.00	1.00	1.00	1.00	1.00	1.00	1.00
PHF Adj:	1.00	1.00	1.00	1.00	1.00	1.00	1.00	1.00	1.00	1.00	1.00	1.00
PHF Volume:	28	63	147	210	120	87	68	318	43	354	710	127
Reduct Vol:	0	0	0	0	0	0	0	0	0	0	0	0
Reduced Vol:	28	63	147	210	120	87	68	318	43	354	710	127
PCE Adj:	1.00	1.00	1.00	1.00	1.00	1.00	1.00	1.00	1.00	1.00	1.00	1.00
MLF Adj:	1.00	1.00	1.00	1.00	1.00	1.00	1.00	1.00	1.00	1.00	1.00	1.00
FinalVolume:	28	63	147	210	120	87	68	318	43	354	710	127
Saturation Flow Module:												
Sat/Lane:	1900	1900	1900	1900	1900	1900	1900	1900	1900	1900	1900	1900
Adjustment:	0.92	0.95	0.85	0.92	0.89	0.89	0.92	0.89	0.89	0.92	0.91	0.85
Lanes:	2.00	2.00	1.00	2.00	1.16	0.84	2.00	3.52	0.48	2.00	3.00	1.00
Final Sat.:	3502	3610	1615	3502	1961	1422	3502	5983	809	3502	5187	1615
Capacity Analysis Module:												
Vol/Sat:	0.01	0.02	0.09	0.06	0.06	0.06	0.02	0.05	0.05	0.10	0.14	0.08
Crit Moves:			****	****			****				****	
Green/Cycle:	0.06	0.30	0.30	0.20	0.43	0.43	0.06	0.18	0.18	0.33	0.45	0.45
Volume/Cap:	0.14	0.06	0.31	0.31	0.14	0.14	0.31	0.30	0.30	0.30	0.31	0.18
Delay/Veh:	45.2	25.2	27.6	34.7	17.1	17.1	45.5	36.1	36.1	24.9	17.9	16.8
User DelAdj:	1.00	1.00	1.00	1.00	1.00	1.00	1.00	1.00	1.00	1.00	1.00	1.00
AdjDel/Veh:	45.2	25.2	27.6	34.7	17.1	17.1	45.5	36.1	36.1	24.9	17.9	16.8
LOS by Move:	D	C	C	C	B	B	D	D	D	C	B	B
HCM2kAvgQ:	1	1	4	3	2	2	1	3	3	4	5	2

Note: Queue reported is the number of cars per lane.

City of Murrieta General Plan
Existing
AM Peak Hour

Level Of Service Computation Report
2000 HCM Operations Method (Base Volume Alternative)

Intersection #30 I-15 SB Off-Ramp & Murrieta Hot Springs Road

Cycle (sec): 100 Critical Vol./Cap.(X): 0.521
Loss Time (sec): 0 (Y+R=4.0 sec) Average Delay (sec/veh): 17.7
Optimal Cycle: 39 Level Of Service: B

Street Name:	I-15 SB Off-Ramp						Murrieta Hot Springs Road					
Approach:	North Bound			South Bound			East Bound			West Bound		
Movement:	L -	T -	R	L -	T -	R	L -	T -	R	L -	T -	R
Control:	Permitted			Permitted			Protected			Protected		
Rights:	Include			Include			Ignore			Ignore		
Min. Green:	0	0	0	0	0	0	0	0	0	0	0	0
Lanes:	0 0	0 0	0	1 0	1! 0	1	0 0	3 0	1	0 0	3 0	1
Volume Module:												
Base Vol:	0	0	0	773	0	397	0	446	194	0	956	47
Growth Adj:	1.00	1.00	1.00	1.00	1.00	1.00	1.00	1.00	1.00	1.00	1.00	1.00
Initial Bse:	0	0	0	773	0	397	0	446	194	0	956	47
User Adj:	1.00	1.00	1.00	1.00	1.00	1.00	1.00	1.00	0.00	1.00	1.00	0.00
PHF Adj:	1.00	1.00	1.00	1.00	1.00	1.00	1.00	1.00	0.00	1.00	1.00	0.00
PHF Volume:	0	0	0	773	0	397	0	446	0	0	956	0
Reduct Vol:	0	0	0	0	0	0	0	0	0	0	0	0
Reduced Vol:	0	0	0	773	0	397	0	446	0	0	956	0
PCE Adj:	1.00	1.00	1.00	1.00	1.00	1.00	1.00	1.00	0.00	1.00	1.00	0.00
MLF Adj:	1.00	1.00	1.00	1.00	1.00	1.00	1.00	1.00	0.00	1.00	1.00	0.00
FinalVolume:	0	0	0	773	0	397	0	446	0	0	956	0
Saturation Flow Module:												
Sat/Lane:	1900	1900	1900	1900	1900	1900	1900	1900	1900	1900	1900	1900
Adjustment:	1.00	1.00	1.00	0.73	1.00	0.73	1.00	0.91	1.00	1.00	0.91	1.00
Lanes:	0.00	0.00	0.00	1.66	0.00	1.34	0.00	3.00	1.00	0.00	3.00	1.00
Final Sat.:	0	0	0	2297	0	1852	0	5187	1900	0	5187	1900
Capacity Analysis Module:												
Vol/Sat:	0.00	0.00	0.00	0.34	0.00	0.21	0.00	0.09	0.00	0.00	0.18	0.00
Crit Moves:				****			****				****	
Green/Cycle:	0.00	0.00	0.00	0.65	0.00	0.65	0.00	0.35	0.00	0.00	0.35	0.00
Volume/Cap:	0.00	0.00	0.00	0.52	0.00	0.33	0.00	0.24	0.00	0.00	0.52	0.00
Delay/Veh:	0.0	0.0	0.0	9.7	0.0	8.0	0.0	22.9	0.0	0.0	25.9	0.0
User DelAdj:	1.00	1.00	1.00	1.00	1.00	1.00	1.00	1.00	1.00	1.00	1.00	1.00
AdjDel/Veh:	0.0	0.0	0.0	9.7	0.0	8.0	0.0	22.9	0.0	0.0	25.9	0.0
LOS by Move:	A	A	A	A	A	A	A	C	A	A	C	A
HCM2kAvgQ:	0	0	0	8	0	4	0	4	0	0	9	0

Note: Queue reported is the number of cars per lane.

City of Murrieta General Plan
Existing
AM Peak Hour

Level Of Service Computation Report
2000 HCM Operations Method (Base Volume Alternative)

Intersection #31 I-15 NB Off-Ramp & Murrieta Hot Springs Road

Cycle (sec): 100 Critical Vol./Cap.(X): 0.291
Loss Time (sec): 0 (Y+R=4.0 sec) Average Delay (sec/veh): 11.8
Optimal Cycle: 32 Level Of Service: B

Street Name:	I-15 NB Off-Ramp						Murrieta Hot Springs Road					
Approach:	North Bound			South Bound			East Bound			West Bound		
Movement:	L -	T -	R	L -	T -	R	L -	T -	R	L -	T -	R
Control:	Protected			Protected			Protected			Protected		
Rights:	Include			Include			Include			Ignore		
Min. Green:	0	0	0	0	0	0	0	0	0	0	0	0
Lanes:	1 1	0 0	1	0 0	0 0	0	1 0	3 0	0	0 0	3 0	1
Volume Module:												
Base Vol:	235	0	91	0	0	0	115	1068	0	0	840	693
Growth Adj:	1.00	1.00	1.00	1.00	1.00	1.00	1.00	1.00	1.00	1.00	1.00	1.00
Initial Bse:	235	0	91	0	0	0	115	1068	0	0	840	693
User Adj:	1.00	1.00	1.00	1.00	1.00	1.00	1.00	1.00	1.00	1.00	1.00	0.00
PHF Adj:	1.00	1.00	1.00	1.00	1.00	1.00	1.00	1.00	1.00	1.00	1.00	0.00
PHF Volume:	235	0	91	0	0	0	115	1068	0	0	840	0
Reduct Vol:	0	0	0	0	0	0	0	0	0	0	0	0
Reduced Vol:	235	0	91	0	0	0	115	1068	0	0	840	0
PCE Adj:	1.00	1.00	1.00	1.00	1.00	1.00	1.00	1.00	1.00	1.00	1.00	0.00
MLF Adj:	1.00	1.00	1.00	1.00	1.00	1.00	1.00	1.00	1.00	1.00	1.00	0.00
FinalVolume:	235	0	91	0	0	0	115	1068	0	0	840	0
Saturation Flow Module:												
Sat/Lane:	1900	1900	1900	1900	1900	1900	1900	1900	1900	1900	1900	1900
Adjustment:	0.95	1.00	0.85	1.00	1.00	1.00	0.95	0.91	1.00	1.00	0.91	1.00
Lanes:	2.00	0.00	1.00	0.00	0.00	0.00	1.00	3.00	0.00	0.00	3.00	1.00
Final Sat.:	3618	0	1615	0	0	0	1805	5187	0	0	5187	1900
Capacity Analysis Module:												
Vol/Sat:	0.06	0.00	0.06	0.00	0.00	0.00	0.06	0.21	0.00	0.00	0.16	0.00
Crit Moves:	****						****				****	
Green/Cycle:	0.22	0.00	0.22	0.00	0.00	0.00	0.22	0.78	0.00	0.00	0.56	0.00
Volume/Cap:	0.29	0.00	0.25	0.00	0.00	0.00	0.29	0.27	0.00	0.00	0.29	0.00
Delay/Veh:	32.4	0.0	32.3	0.0	0.0	0.0	33.0	3.2	0.0	0.0	11.8	0.0
User DelAdj:	1.00	1.00	1.00	1.00	1.00	1.00	1.00	1.00	1.00	1.00	1.00	1.00
AdjDel/Veh:	32.4	0.0	32.3	0.0	0.0	0.0	33.0	3.2	0.0	0.0	11.8	0.0
LOS by Move:	C	A	C	A	A	A	C	A	A	A	B	A
HCM2kAvgQ:	3	0	2	0	0	0	3	3	0	0	5	0

Note: Queue reported is the number of cars per lane.

City of Murrieta General Plan
Existing
AM Peak Hour

Level Of Service Computation Report
2000 HCM Operations Method (Base Volume Alternative)

Intersection #32 I-215 SB Off-Ramp & Murrieta Hot Springs Road

Cycle (sec): 100 Critical Vol./Cap.(X): 0.501
Loss Time (sec): 0 (Y+R=4.0 sec) Average Delay (sec/veh): 16.0
Optimal Cycle: 29 Level Of Service: B

Street Name:	I-215 SB Off-Ramp						Murrieta Hot Springs Road					
Approach:	North Bound			South Bound			East Bound			West Bound		
Movement:	L - T - R			L - T - R			L - T - R			L - T - R		
Control:	Permitted			Permitted			Permitted			Permitted		
Rights:	Include			Include			Ignore			Ignore		
Min. Green:	0	0	0	0	0	0	0	0	0	0	0	0
Lanes:	0 0	0 0	0	1 0	1! 0	1	0 0	3 0	1	0 0	3 0	1
Volume Module:												
Base Vol:	0	0	0	526	0	420	0	1105	53	0	1343	378
Growth Adj:	1.00	1.00	1.00	1.00	1.00	1.00	1.00	1.00	1.00	1.00	1.00	1.00
Initial Bse:	0	0	0	526	0	420	0	1105	53	0	1343	378
User Adj:	1.00	1.00	1.00	1.00	1.00	1.00	1.00	1.00	0.00	1.00	1.00	0.00
PHF Adj:	1.00	1.00	1.00	1.00	1.00	1.00	1.00	1.00	0.00	1.00	1.00	0.00
PHF Volume:	0	0	0	526	0	420	0	1105	0	0	1343	0
Reduct Vol:	0	0	0	0	0	0	0	0	0	0	0	0
Reduced Vol:	0	0	0	526	0	420	0	1105	0	0	1343	0
PCE Adj:	1.00	1.00	1.00	1.00	1.00	1.00	1.00	1.00	0.00	1.00	1.00	0.00
MLF Adj:	1.00	1.00	1.00	1.00	1.00	1.00	1.00	1.00	0.00	1.00	1.00	0.00
FinalVolume:	0	0	0	526	0	420	0	1105	0	0	1343	0
Saturation Flow Module:												
Sat/Lane:	1900	1900	1900	1900	1900	1900	1900	1900	1900	1900	1900	1900
Adjustment:	1.00	1.00	1.00	0.74	1.00	0.74	1.00	0.91	1.00	1.00	0.91	1.00
Lanes:	0.00	0.00	0.00	1.56	0.00	1.44	0.00	3.00	1.00	0.00	3.00	1.00
Final Sat.:	0	0	0	2176	0	2020	0	5187	1900	0	5187	1900
Capacity Analysis Module:												
Vol/Sat:	0.00	0.00	0.00	0.24	0.00	0.21	0.00	0.21	0.00	0.00	0.26	0.00
Crit Moves:				****							****	
Green/Cycle:	0.00	0.00	0.00	0.48	0.00	0.48	0.00	0.52	0.00	0.00	0.52	0.00
Volume/Cap:	0.00	0.00	0.00	0.50	0.00	0.43	0.00	0.41	0.00	0.00	0.50	0.00
Delay/Veh:	0.0	0.0	0.0	17.8	0.0	17.0	0.0	14.9	0.0	0.0	15.9	0.0
User DelAdj:	1.00	1.00	1.00	1.00	1.00	1.00	1.00	1.00	1.00	1.00	1.00	1.00
AdjDel/Veh:	0.0	0.0	0.0	17.8	0.0	17.0	0.0	14.9	0.0	0.0	15.9	0.0
LOS by Move:	A	A	A	B	A	B	A	B	A	A	B	A
HCM2kAvgQ:	0	0	0	7	0	6	0	8	0	0	10	0

Note: Queue reported is the number of cars per lane.

City of Murrieta General Plan
Existing
AM Peak Hour

Level Of Service Computation Report
2000 HCM Operations Method (Base Volume Alternative)

Intersection #33 I-215 NB Off-Ramp & Murrieta Hot Springs Road

Cycle (sec): 100 Critical Vol./Cap.(X): 0.369
Loss Time (sec): 0 (Y+R=4.0 sec) Average Delay (sec/veh): 5.4
Optimal Cycle: 23 Level Of Service: A

Street Name:	I-215 NB Off-Ramp						Murrieta Hot Springs Road					
Approach:	North Bound			South Bound			East Bound			West Bound		
Movement:	L - T - R			L - T - R			L - T - R			L - T - R		
Control:	Permitted			Permitted			Permitted			Permitted		
Rights:	Include			Include			Ignore			Ignore		
Min. Green:	0	0	0	0	0	0	0	0	0	0	0	0
Lanes:	2 0	0 0	2	0 0	0 0	0	0 0	3 0	1	0 0	3 0	1
Volume Module:												
Base Vol:	151	0	163	0	0	0	0	1444	115	0	1591	466
Growth Adj:	1.00	1.00	1.00	1.00	1.00	1.00	1.00	1.00	1.00	1.00	1.00	1.00
Initial Bse:	151	0	163	0	0	0	0	1444	115	0	1591	466
User Adj:	1.00	1.00	1.00	1.00	1.00	1.00	1.00	1.00	0.00	1.00	1.00	0.00
PHF Adj:	1.00	1.00	1.00	1.00	1.00	1.00	1.00	1.00	0.00	1.00	1.00	0.00
PHF Volume:	151	0	163	0	0	0	0	1444	0	0	1591	0
Reduct Vol:	0	0	0	0	0	0	0	0	0	0	0	0
Reduced Vol:	151	0	163	0	0	0	0	1444	0	0	1591	0
PCE Adj:	1.00	1.00	1.00	1.00	1.00	1.00	1.00	1.00	0.00	1.00	1.00	0.00
MLF Adj:	1.00	1.00	1.00	1.00	1.00	1.00	1.00	1.00	0.00	1.00	1.00	0.00
FinalVolume:	151	0	163	0	0	0	0	1444	0	0	1591	0
Saturation Flow Module:												
Sat/Lane:	1900	1900	1900	1900	1900	1900	1900	1900	1900	1900	1900	1900
Adjustment:	0.63	1.00	0.75	1.00	1.00	1.00	1.00	0.91	1.00	1.00	0.91	1.00
Lanes:	2.00	0.00	2.00	0.00	0.00	0.00	0.00	3.00	1.00	0.00	3.00	1.00
Final Sat.:	2407	0	2842	0	0	0	0	5187	1900	0	5187	1900
Capacity Analysis Module:												
Vol/Sat:	0.06	0.00	0.06	0.00	0.00	0.00	0.00	0.28	0.00	0.00	0.31	0.00
Crit Moves:	****										****	
Green/Cycle:	0.17	0.00	0.17	0.00	0.00	0.00	0.00	0.83	0.00	0.00	0.83	0.00
Volume/Cap:	0.37	0.00	0.34	0.00	0.00	0.00	0.00	0.34	0.00	0.00	0.37	0.00
Delay/Veh:	37.3	0.0	37.0	0.0	0.0	0.0	0.0	2.0	0.0	0.0	2.1	0.0
User DelAdj:	1.00	1.00	1.00	1.00	1.00	1.00	1.00	1.00	1.00	1.00	1.00	1.00
AdjDel/Veh:	37.3	0.0	37.0	0.0	0.0	0.0	0.0	2.0	0.0	0.0	2.1	0.0
LOS by Move:	D	A	D	A	A	A	A	A	A	A	A	A
HCM2kAvgQ:	2	0	3	0	0	0	0	4	0	0	5	0

Note: Queue reported is the number of cars per lane.

City of Murrieta General Plan
Existing
AM Peak Hour

Level Of Service Computation Report
2000 HCM Operations Method (Base Volume Alternative)

Intersection #34 Jackson Avenue & Murrieta Hot Springs Road

Cycle (sec): 100 Critical Vol./Cap.(X): 0.303
Loss Time (sec): 0 (Y+R=4.0 sec) Average Delay (sec/veh): 4.3
Optimal Cycle: 27 Level Of Service: A

Street Name:	Jackson Avenue						Murrieta Hot Springs Road					
Approach:	North Bound			South Bound			East Bound			West Bound		
Movement:	L -	T -	R	L -	T -	R	L -	T -	R	L -	T -	R
Control:	Permitted			Permitted			Protected			Protected		
Rights:	Include			Include			Include			Include		
Min. Green:	0	0	0	0	0	0	0	0	0	0	0	0
Lanes:	2 0	0	0 2	0 0	0	0 0	0 0	3	0 1	1 0	3	0 0
Volume Module:												
Base Vol:	66	0	52	0	0	0	0	1217	24	69	1439	0
Growth Adj:	1.00	1.00	1.00	1.00	1.00	1.00	1.00	1.00	1.00	1.00	1.00	1.00
Initial Bse:	66	0	52	0	0	0	0	1217	24	69	1439	0
User Adj:	1.00	1.00	1.00	1.00	1.00	1.00	1.00	1.00	1.00	1.00	1.00	1.00
PHF Adj:	1.00	1.00	1.00	1.00	1.00	1.00	1.00	1.00	1.00	1.00	1.00	1.00
PHF Volume:	66	0	52	0	0	0	0	1217	24	69	1439	0
Reduct Vol:	0	0	0	0	0	0	0	0	0	0	0	0
Reduced Vol:	66	0	52	0	0	0	0	1217	24	69	1439	0
PCE Adj:	1.00	1.00	1.00	1.00	1.00	1.00	1.00	1.00	1.00	1.00	1.00	1.00
MLF Adj:	1.00	1.00	1.00	1.00	1.00	1.00	1.00	1.00	1.00	1.00	1.00	1.00
FinalVolume:	66	0	52	0	0	0	0	1217	24	69	1439	0
Saturation Flow Module:												
Sat/Lane:	1900	1900	1900	1900	1900	1900	1900	1900	1900	1900	1900	1900
Adjustment:	0.68	1.00	0.75	1.00	1.00	1.00	1.00	0.91	0.85	0.95	0.91	1.00
Lanes:	2.00	0.00	2.00	0.00	0.00	0.00	0.00	3.00	1.00	1.00	3.00	0.00
Final Sat.:	2580	0	2842	0	0	0	0	5187	1615	1805	5187	0
Capacity Analysis Module:												
Vol/Sat:	0.03	0.00	0.02	0.00	0.00	0.00	0.00	0.23	0.01	0.04	0.28	0.00
Crit Moves:	****						****				****	
Green/Cycle:	0.08	0.00	0.08	0.00	0.00	0.00	0.00	0.79	0.79	0.13	0.92	0.00
Volume/Cap:	0.30	0.00	0.22	0.00	0.00	0.00	0.00	0.30	0.02	0.30	0.30	0.00
Delay/Veh:	43.8	0.0	43.2	0.0	0.0	0.0	0.0	3.0	2.3	40.2	0.5	0.0
User DelAdj:	1.00	1.00	1.00	1.00	1.00	1.00	1.00	1.00	1.00	1.00	1.00	1.00
AdjDel/Veh:	43.8	0.0	43.2	0.0	0.0	0.0	0.0	3.0	2.3	40.2	0.5	0.0
LOS by Move:	D	A	D	A	A	A	A	A	A	D	A	A
HCM2kAvgQ:	1	0	1	0	0	0	0	4	0	2	2	0

Note: Queue reported is the number of cars per lane.

City of Murrieta General Plan
Existing
AM Peak Hour

Level Of Service Computation Report
2000 HCM Operations Method (Base Volume Alternative)

Intersection #35 Margarita Road & Murrieta Hot Springs Road

Cycle (sec): 100 Critical Vol./Cap.(X): 0.666
Loss Time (sec): 0 (Y+R=4.0 sec) Average Delay (sec/veh): 19.2
Optimal Cycle: 68 Level Of Service: B

Street Name:	Margarita Road						Murrieta Hot Springs Road					
Approach:	North Bound			South Bound			East Bound			West Bound		
Movement:	L -	T -	R	L -	T -	R	L -	T -	R	L -	T -	R
Control:	Protected			Protected			Protected			Protected		
Rights:	Include			Include			Include			Include		
Min. Green:	0	0	0	0	0	0	0	0	0	0	0	0
Lanes:	2 0	1	0 1	0 1	0	1	1 0	2	0 1	1 0	2	1 0
Volume Module:												
Base Vol:	674	8	131	6	3	1	22	782	581	197	999	5
Growth Adj:	1.00	1.00	1.00	1.00	1.00	1.00	1.00	1.00	1.00	1.00	1.00	1.00
Initial Bse:	674	8	131	6	3	1	22	782	581	197	999	5
User Adj:	1.00	1.00	1.00	1.00	1.00	1.00	1.00	1.00	1.00	1.00	1.00	1.00
PHF Adj:	1.00	1.00	1.00	1.00	1.00	1.00	1.00	1.00	1.00	1.00	1.00	1.00
PHF Volume:	674	8	131	6	3	1	22	782	581	197	999	5
Reduct Vol:	0	0	0	0	0	0	0	0	0	0	0	0
Reduced Vol:	674	8	131	6	3	1	22	782	581	197	999	5
PCE Adj:	1.00	1.00	1.00	1.00	1.00	1.00	1.00	1.00	1.00	1.00	1.00	1.00
MLF Adj:	1.00	1.00	1.00	1.00	1.00	1.00	1.00	1.00	1.00	1.00	1.00	1.00
FinalVolume:	674	8	131	6	3	1	22	782	581	197	999	5
Saturation Flow Module:												
Sat/Lane:	1900	1900	1900	1900	1900	1900	1900	1900	1900	1900	1900	1900
Adjustment:	0.92	1.00	0.85	0.97	0.97	0.85	0.95	0.95	0.85	0.95	0.91	0.91
Lanes:	2.00	1.00	1.00	0.67	0.33	1.00	1.00	2.00	1.00	1.00	2.99	0.01
Final Sat.:	3502	1900	1615	1226	613	1615	1805	3610	1615	1805	5156	26
Capacity Analysis Module:												
Vol/Sat:	0.19	0.00	0.08	0.00	0.00	0.00	0.01	0.22	0.36	0.11	0.19	0.19
Crit Moves:	****				****				****	****		
Green/Cycle:	0.29	0.28	0.28	0.02	0.01	0.01	0.04	0.54	0.54	0.16	0.66	0.66
Volume/Cap:	0.67	0.02	0.29	0.29	0.67	0.08	0.29	0.40	0.67	0.67	0.29	0.29
Delay/Veh:	33.0	26.1	28.6	53.7	133	52.3	48.7	13.6	18.5	44.9	7.1	7.1
User DelAdj:	1.00	1.00	1.00	1.00	1.00	1.00	1.00	1.00	1.00	1.00	1.00	1.00
AdjDel/Veh:	33.0	26.1	28.6	53.7	133	52.3	48.7	13.6	18.5	44.9	7.1	7.1
LOS by Move:	C	C	C	D	F	D	D	B	B	D	A	A
HCM2kAvgQ:	10	0	3	1	1	0	1	7	13	7	5	5

Note: Queue reported is the number of cars per lane.

City of Murrieta General Plan
Existing
AM Peak Hour

Level Of Service Computation Report
2000 HCM Operations Method (Base Volume Alternative)

Intersection #37 Jefferson Avenue & Guava Street

Cycle (sec): 100 Critical Vol./Cap.(X): 0.352
Loss Time (sec): 0 (Y+R=4.0 sec) Average Delay (sec/veh): 2.0
Optimal Cycle: 29 Level Of Service: A

Street Name:	Jefferson Avenue												Guava Street											
Approach:	North Bound						South Bound						East Bound						West Bound					
Movement:	L	-	T	-	R		L	-	T	-	R		L	-	T	-	R		L	-	T	-	R	
Control:	Protected						Protected						Permitted						Permitted					
Rights:	Include						Include						Include						Include					
Min. Green:	0	0	0				0	0	0				0	0	0				0	0	0			
Lanes:	1	0	2	0	1		1	0	1	1	0		1	0	0	1	0		1	0	1	0	1	
Volume Module:																								
Base Vol:	0	319	11		10	1198	0		0		0		30		0		16							
Growth Adj:	1.00	1.00	1.00		1.00	1.00	1.00		1.00		1.00		1.00		1.00		1.00							
Initial Bse:	0	319	11		10	1198	0		0		0		30		0		16							
User Adj:	1.00	1.00	1.00		1.00	1.00	1.00		1.00		1.00		1.00		1.00		1.00							
PHF Adj:	1.00	1.00	1.00		1.00	1.00	1.00		1.00		1.00		1.00		1.00		1.00							
PHF Volume:	0	319	11		10	1198	0		0		0		30		0		16							
Reduct Vol:	0	0	0		0	0	0		0		0		0		0		0							
Reduced Vol:	0	319	11		10	1198	0		0		0		30		0		16							
PCE Adj:	1.00	1.00	1.00		1.00	1.00	1.00		1.00		1.00		1.00		1.00		1.00							
MLF Adj:	1.00	1.00	1.00		1.00	1.00	1.00		1.00		1.00		1.00		1.00		1.00							
FinalVolume:	0	319	11		10	1198	0		0		0		30		0		16							
Saturation Flow Module:																								
Sat/Lane:	1900	1900	1900		1900	1900	1900		1900		1900		1900		1900		1900							
Adjustment:	1.00	0.95	0.85		0.95	0.95	0.95		1.00		1.00		1.00		0.77		1.00							
Lanes:	1.00	2.00	1.00		1.00	2.00	0.00		1.00		1.00		0.00		1.00		1.00							
Final Sat.:	1900	3610	1615		1805	3610	0		1900		1900		0		1461		1900		1615					
Capacity Analysis Module:																								
Vol/Sat:	0.00	0.09	0.01		0.01	0.33	0.00		0.00		0.00		0.00		0.02		0.00		0.01					
Crit Moves:	****					****									****									
Green/Cycle:	0.00	0.89	0.89		0.06	0.94	0.00		0.00		0.00		0.00		0.06		0.00		0.06					
Volume/Cap:	0.00	0.10	0.01		0.10	0.35	0.00		0.00		0.00		0.00		0.35		0.00		0.17					
Delay/Veh:	0.0	0.7	0.7		45.3	0.3	0.0		0.0		0.0		0.0		47.8		0.0		45.6					
User DelAdj:	1.00	1.00	1.00		1.00	1.00	1.00		1.00		1.00		1.00		1.00		1.00		1.00					
AdjDel/Veh:	0.0	0.7	0.7		45.3	0.3	0.0		0.0		0.0		0.0		47.8		0.0		45.6					
LOS by Move:	A	A	A		D	A	A		A		A		A		D		A		D					
HCM2kAvgQ:	0	1	0		0	2	0		0		0		0		1		0		1					

Note: Queue reported is the number of cars per lane.

City of Murrieta General Plan
Existing
AM Peak Hour

Level Of Service Computation Report
2000 HCM Unsignalized Method (Base Volume Alternative)

Intersection #38 Jefferson Avenue & Cherry Street

Average Delay (sec/veh): 1.3 Worst Case Level Of Service: C[15.2]

Street Name:	Jefferson Avenue												Cherry Street											
Approach:	North Bound						South Bound						East Bound						West Bound					
Movement:	L	-	T	-	R		L	-	T	-	R		L	-	T	-	R		L	-	T	-	R	
Control:	Uncontrolled						Uncontrolled						Stop Sign						Stop Sign					
Rights:	Include						Include						Include						Include					
Lanes:	1	0	2	0	0		0	0	1	1	0		0	0	1!	0	0		0	0	0	0	0	
Volume Module:																								
Base Vol:	105	553	0		0	742	28		10		0		50		0		0							
Growth Adj:	1.00	1.00	1.00		1.00	1.00	1.00		1.00		1.00		1.00		1.00		1.00							
Initial Bse:	105	553	0		0	742	28		10		0		50		0		0							
User Adj:	1.00	1.00	1.00		1.00	1.00	1.00		1.00		1.00		1.00		1.00		1.00							
PHF Adj:	1.00	1.00	1.00		1.00	1.00	1.00		1.00		1.00		1.00		1.00		1.00							
PHF Volume:	105	553	0		0	742	28		10		0		50		0		0							
Reduct Vol:	0	0	0		0	0	0		0		0		0		0		0							
FinalVolume:	105	553	0		0	742	28		10		0		50		0		0							
Critical Gap Module:																								
Critical Gp:	4.1	xxxx	xxxxx		xxxxx	xxxx	xxxxx		6.8		6.5		6.9		xxxxx		xxxx		xxxxx					
FollowUpTim:	2.2	xxxx	xxxxx		xxxxx	xxxx	xxxxx		3.5		4.0		3.3		xxxxx		xxxx		xxxxx					
Capacity Module:																								
Cnflict Vol:	770	xxxx	xxxxx		xxxx	xxxx	xxxxx		1243		1519		385		xxxx		xxxx		xxxxx					
Potent Cap.:	854	xxxx	xxxxx		xxxx	xxxx	xxxxx		170		120		619		xxxx		xxxx		xxxxx					
Move Cap.:	854	xxxx	xxxxx		xxxx	xxxx	xxxxx		154		105		619		xxxx		xxxx		xxxxx					
Volume/Cap:	0.12	xxxx	xxxx		xxxx	xxxx	xxxx		0.07		0.00		0.08		xxxx		xxxx		xxxx					
Level Of Service Module:																								
2Way95thQ:	0.4	xxxx	xxxxx		xxxx	xxxx	xxxxx		xxxx		xxxx		xxxxx		xxxx		xxxx		xxxxx					
Control Del:	9.8	xxxx	xxxxx		xxxxx	xxxx	xxxxx		xxxxx		xxxx		xxxxx		xxxxx		xxxx		xxxxx					
LOS by Move:	A	*	*		*	*	*		*		*		*		*		*		*					
Movement:	LT - LTR - RT						LT - LTR - RT						LT - LTR - RT						LT - LTR - RT					
Shared Cap.:	xxxx	xxxx	xxxxx		xxxx	xxxx	xxxxx		xxxx		411		xxxxx		xxxx		xxxx		xxxxx					
SharedQueue:	xxxxx	xxxx	xxxxx		xxxxx	xxxx	xxxxx		xxxxx		0.5		xxxxx		xxxxx		xxxx		xxxxx					
Shrd ConDel:	xxxxx	xxxx	xxxxx		xxxxx	xxxx	xxxxx		xxxxx		15.2		xxxxx		xxxxx		xxxx		xxxxx					
Shared LOS:	*	*	*		*	*	*		*		C		*		*		*		*					
ApproachDel:	xxxxxx				xxxxxx						15.2				xxxxxx									
ApproachLOS:	*				*						C				*									

Note: Queue reported is the number of cars per lane.

City of Murrieta General Plan
Existing
AM Peak Hour

Level Of Service Computation Report
2000 HCM Operations Method (Base Volume Alternative)

Intersection #39 Washington Ave & Calle Del Oso Oro/Nutmeg

Cycle (sec): 100 Critical Vol./Cap.(X): 0.648
Loss Time (sec): 0 (Y+R=4.0 sec) Average Delay (sec/veh): 29.2
Optimal Cycle: 65 Level Of Service: C

Street Name:	Washington Ave						Calle Del Oso Oro/Nutmeg					
Approach:	North Bound			South Bound			East Bound			West Bound		
Movement:	L - T - R			L - T - R			L - T - R			L - T - R		
Control:	Protected			Protected			Protected			Protected		
Rights:	Include			Include			Include			Include		
Min. Green:	0	0	0	0	0	0	0	0	0	0	0	0
Lanes:	1 0	1 0	1	1 0	1 1	0	1 0	1 0	1	1 0	1 0	1
Volume Module:												
Base Vol:	226	199	101	53	264	57	36	223	551	162	109	31
Growth Adj:	1.00	1.00	1.00	1.00	1.00	1.00	1.00	1.00	1.00	1.00	1.00	1.00
Initial Bse:	226	199	101	53	264	57	36	223	551	162	109	31
User Adj:	1.00	1.00	1.00	1.00	1.00	1.00	1.00	1.00	1.00	1.00	1.00	1.00
PHF Adj:	1.00	1.00	1.00	1.00	1.00	1.00	1.00	1.00	1.00	1.00	1.00	1.00
PHF Volume:	226	199	101	53	264	57	36	223	551	162	109	31
Reduct Vol:	0	0	0	0	0	0	0	0	0	0	0	0
Reduced Vol:	226	199	101	53	264	57	36	223	551	162	109	31
PCE Adj:	1.00	1.00	1.00	1.00	1.00	1.00	1.00	1.00	1.00	1.00	1.00	1.00
MLF Adj:	1.00	1.00	1.00	1.00	1.00	1.00	1.00	1.00	1.00	1.00	1.00	1.00
FinalVolume:	226	199	101	53	264	57	36	223	551	162	109	31
Saturation Flow Module:												
Sat/Lane:	1900	1900	1900	1900	1900	1900	1900	1900	1900	1900	1900	1900
Adjustment:	0.95	1.00	0.85	0.95	0.92	0.92	0.95	1.00	0.85	0.95	1.00	0.85
Lanes:	1.00	1.00	1.00	1.00	1.64	0.36	1.00	1.00	1.00	1.00	1.00	1.00
Final Sat.:	1805	1900	1615	1805	2889	624	1805	1900	1615	1805	1900	1615
Capacity Analysis Module:												
Vol/Sat:	0.13	0.10	0.06	0.03	0.09	0.09	0.02	0.12	0.34	0.09	0.06	0.02
Crit Moves:	****				****				****	****		
Green/Cycle:	0.19	0.26	0.26	0.07	0.14	0.14	0.17	0.53	0.53	0.14	0.49	0.49
Volume/Cap:	0.65	0.40	0.24	0.40	0.65	0.65	0.12	0.22	0.65	0.65	0.12	0.04
Delay/Veh:	41.4	31.0	29.4	46.2	43.6	43.6	35.2	12.8	18.7	46.6	13.6	13.1
User DelAdj:	1.00	1.00	1.00	1.00	1.00	1.00	1.00	1.00	1.00	1.00	1.00	1.00
AdjDel/Veh:	41.4	31.0	29.4	46.2	43.6	43.6	35.2	12.8	18.7	46.6	13.6	13.1
LOS by Move:	D	C	C	D	D	D	D	B	B	D	B	B
HCM2kAvgQ:	7	5	3	2	6	6	1	4	13	6	2	0

Note: Queue reported is the number of cars per lane.

City of Murrieta General Plan
Existing
AM Peak Hour

Level Of Service Computation Report
2000 HCM Operations Method (Base Volume Alternative)

Intersection #40 Clinton Keith Rd & Calle de Oso Oro/Bear Creek Dr

Cycle (sec): 100 Critical Vol./Cap.(X): 0.195
Loss Time (sec): 0 (Y+R=4.0 sec) Average Delay (sec/veh): 13.6
Optimal Cycle: 23 Level Of Service: B

Street Name:	Clinton Keith Rd						Calle de Oso Oro/Bear Creek Dr					
Approach:	North Bound			South Bound			East Bound			West Bound		
Movement:	L - T - R			L - T - R			L - T - R			L - T - R		
Control:	Protected			Protected			Permitted			Permitted		
Rights:	Include			Include			Include			Include		
Min. Green:	0	0	0	0	0	0	0	0	0	0	0	0
Lanes:	1 0	1 1	0	1 0	1 1	0	1 0	0 1	0	1 0	1 1	0
Volume Module:												
Base Vol:	2	262	155	31	157	75	69	37	2	64	26	64
Growth Adj:	1.00	1.00	1.00	1.00	1.00	1.00	1.00	1.00	1.00	1.00	1.00	1.00
Initial Bse:	2	262	155	31	157	75	69	37	2	64	26	64
User Adj:	1.00	1.00	1.00	1.00	1.00	1.00	1.00	1.00	1.00	1.00	1.00	1.00
PHF Adj:	1.00	1.00	1.00	1.00	1.00	1.00	1.00	1.00	1.00	1.00	1.00	1.00
PHF Volume:	2	262	155	31	157	75	69	37	2	64	26	64
Reduct Vol:	0	0	0	0	0	0	0	0	0	0	0	0
Reduced Vol:	2	262	155	31	157	75	69	37	2	64	26	64
PCE Adj:	1.00	1.00	1.00	1.00	1.00	1.00	1.00	1.00	1.00	1.00	1.00	1.00
MLF Adj:	1.00	1.00	1.00	1.00	1.00	1.00	1.00	1.00	1.00	1.00	1.00	1.00
FinalVolume:	2	262	155	31	157	75	69	37	2	64	26	64
Saturation Flow Module:												
Sat/Lane:	1900	1900	1900	1900	1900	1900	1900	1900	1900	1900	1900	1900
Adjustment:	0.95	0.90	0.90	0.95	0.90	0.90	0.65	0.99	0.99	0.69	0.85	0.85
Lanes:	1.00	1.26	0.74	1.00	1.35	0.65	1.00	0.95	0.05	1.00	1.00	1.00
Final Sat.:	1805	2141	1267	1805	2326	1111	1239	1788	97	1313	1612	1612
Capacity Analysis Module:												
Vol/Sat:	0.00	0.12	0.12	0.02	0.07	0.07	0.06	0.02	0.02	0.05	0.02	0.04
Crit Moves:		****		****			****					
Green/Cycle:	0.01	0.63	0.63	0.09	0.70	0.70	0.29	0.29	0.29	0.29	0.29	0.29
Volume/Cap:	0.10	0.20	0.20	0.20	0.10	0.10	0.20	0.07	0.07	0.17	0.06	0.14
Delay/Veh:	50.9	8.0	8.0	42.9	4.7	4.7	27.3	26.1	26.1	27.1	26.0	26.7
User DelAdj:	1.00	1.00	1.00	1.00	1.00	1.00	1.00	1.00	1.00	1.00	1.00	1.00
AdjDel/Veh:	50.9	8.0	8.0	42.9	4.7	4.7	27.3	26.1	26.1	27.1	26.0	26.7
LOS by Move:	D	A	A	D	A	A	C	C	C	C	C	C
HCM2kAvgQ:	0	3	3	1	1	1	2	1	1	2	1	2

Note: Queue reported is the number of cars per lane.

City of Murrieta General Plan
Existing
AM Peak Hour

Level Of Service Computation Report
2000 HCM 4-Way Stop Method (Base Volume Alternative)

Intersection #41 Jefferson Ave & Nutmeg St

Cycle (sec): 100 Critical Vol./Cap.(X): 0.535
Loss Time (sec): 0 (Y+R=4.0 sec) Average Delay (sec/veh): 13.2
Optimal Cycle: 0 Level Of Service: B

Street Name:	Jefferson Ave						Nutmeg St					
Approach:	North Bound			South Bound			East Bound			West Bound		
Movement:	L - T - R			L - T - R			L - T - R			L - T - R		
Control:	Stop Sign			Stop Sign			Stop Sign			Stop Sign		
Rights:	Include			Include			Include			Include		
Min. Green:	0	0	0	0	0	0	0	0	0	0	0	0
Lanes:	1 0	0 1	0	1 0	0 1	0	1 0	1 1	0	1 0	1 1	0
Volume Module:												
Base Vol:	80	32	136	11	93	7	15	181	178	261	250	22
Growth Adj:	1.00	1.00	1.00	1.00	1.00	1.00	1.00	1.00	1.00	1.00	1.00	1.00
Initial Bse:	80	32	136	11	93	7	15	181	178	261	250	22
User Adj:	1.00	1.00	1.00	1.00	1.00	1.00	1.00	1.00	1.00	1.00	1.00	1.00
PHF Adj:	1.00	1.00	1.00	1.00	1.00	1.00	1.00	1.00	1.00	1.00	1.00	1.00
PHF Volume:	80	32	136	11	93	7	15	181	178	261	250	22
Reduct Vol:	0	0	0	0	0	0	0	0	0	0	0	0
Reduced Vol:	80	32	136	11	93	7	15	181	178	261	250	22
PCE Adj:	1.00	1.00	1.00	1.00	1.00	1.00	1.00	1.00	1.00	1.00	1.00	1.00
MLF Adj:	1.00	1.00	1.00	1.00	1.00	1.00	1.00	1.00	1.00	1.00	1.00	1.00
FinalVolume:	80	32	136	11	93	7	15	181	178	261	250	22
Saturation Flow Module:												
Adjustment:	1.00	1.00	1.00	1.00	1.00	1.00	1.00	1.00	1.00	1.00	1.00	1.00
Lanes:	1.00	0.19	0.81	1.00	0.93	0.07	1.00	1.01	0.99	1.00	1.84	0.16
Final Sat.:	453	100	425	429	430	32	454	496	537	488	961	85
Capacity Analysis Module:												
Vol/Sat:	0.18	0.32	0.32	0.03	0.22	0.22	0.03	0.37	0.33	0.53	0.26	0.26
Crit Moves:		****			****			****		****		
Delay/Veh:	11.8	12.0	12.0	10.7	11.8	11.8	10.5	13.5	12.0	17.5	11.6	11.5
Delay Adj:	1.00	1.00	1.00	1.00	1.00	1.00	1.00	1.00	1.00	1.00	1.00	1.00
AdjDel/Veh:	11.8	12.0	12.0	10.7	11.8	11.8	10.5	13.5	12.0	17.5	11.6	11.5
LOS by Move:	B	B	B	B	B	B	B	B	B	C	B	B
ApproachDel:	11.9			11.7			12.7			14.5		
Delay Adj:	1.00			1.00			1.00			1.00		
ApprAdjDel:	11.9			11.7			12.7			14.5		
LOS by Appr:	B			B			B			B		
AllWayAvgQ:	0.2	0.4	0.4	0.0	0.2	0.2	0.0	0.5	0.4	1.0	0.3	0.3

Note: Queue reported is the number of cars per lane.

City of Murrieta General Plan
Existing
AM Peak Hour

Level Of Service Computation Report
2000 HCM 4-Way Stop Method (Base Volume Alternative)

Intersection #42 Jefferson Ave & Magnolia St

Cycle (sec): 100 Critical Vol./Cap.(X): 0.796
Loss Time (sec): 0 (Y+R=4.0 sec) Average Delay (sec/veh): 18.2
Optimal Cycle: 0 Level Of Service: C

Street Name:	Jefferson Ave						Magnolia St					
Approach:	North Bound			South Bound			East Bound			West Bound		
Movement:	L - T - R			L - T - R			L - T - R			L - T - R		
Control:	Stop Sign			Stop Sign			Stop Sign			Stop Sign		
Rights:	Include			Include			Include			Include		
Min. Green:	0	0	0	0	0	0	0	0	0	0	0	0
Lanes:	0 1	0 0	1	0 0	1! 0	0	0 0	1! 0	0	0 0	1! 0	0
Volume Module:												
Base Vol:	56	164	6	5	428	143	124	3	95	17	6	1
Growth Adj:	1.00	1.00	1.00	1.00	1.00	1.00	1.00	1.00	1.00	1.00	1.00	1.00
Initial Bse:	56	164	6	5	428	143	124	3	95	17	6	1
User Adj:	1.00	1.00	1.00	1.00	1.00	1.00	1.00	1.00	1.00	1.00	1.00	1.00
PHF Adj:	1.00	1.00	1.00	1.00	1.00	1.00	1.00	1.00	1.00	1.00	1.00	1.00
PHF Volume:	56	164	6	5	428	143	124	3	95	17	6	1
Reduct Vol:	0	0	0	0	0	0	0	0	0	0	0	0
Reduced Vol:	56	164	6	5	428	143	124	3	95	17	6	1
PCE Adj:	1.00	1.00	1.00	1.00	1.00	1.00	1.00	1.00	1.00	1.00	1.00	1.00
MLF Adj:	1.00	1.00	1.00	1.00	1.00	1.00	1.00	1.00	1.00	1.00	1.00	1.00
FinalVolume:	56	164	6	5	428	143	124	3	95	17	6	1
Saturation Flow Module:												
Adjustment:	1.00	1.00	1.00	1.00	1.00	1.00	1.00	1.00	1.00	1.00	1.00	1.00
Lanes:	0.25	0.75	1.00	0.01	0.74	0.25	0.56	0.01	0.43	0.71	0.25	0.04
Final Sat.:	148	435	673	6	538	180	323	8	248	351	124	21
Capacity Analysis Module:												
Vol/Sat:	0.38	0.38	0.01	0.80	0.80	0.80	0.38	0.38	0.38	0.05	0.05	0.05
Crit Moves:	****				****		****				****	
Delay/Veh:	12.0	12.0	7.8	23.5	23.5	23.5	11.8	11.8	11.8	9.7	9.7	9.7
Delay Adj:	1.00	1.00	1.00	1.00	1.00	1.00	1.00	1.00	1.00	1.00	1.00	1.00
AdjDel/Veh:	12.0	12.0	7.8	23.5	23.5	23.5	11.8	11.8	11.8	9.7	9.7	9.7
LOS by Move:	B	B	A	C	C	C	B	B	B	A	A	A
ApproachDel:	11.8			23.5			11.8			9.7		
Delay Adj:	1.00			1.00			1.00			1.00		
ApprAdjDel:	11.8			23.5			11.8			9.7		
LOS by Appr:	B			C			B			A		
AllWayAvgQ:	0.5	0.5	0.0	3.1	3.1	3.1	0.5	0.5	0.5	0.0	0.0	0.0

Note: Queue reported is the number of cars per lane.

City of Murrieta General Plan
Existing
AM Peak Hour

Level Of Service Computation Report
2000 HCM Operations Method (Base Volume Alternative)

Intersection #43 Jefferson Ave & Lemon St

Cycle (sec):	100	Critical Vol./Cap.(X):	0.370
Loss Time (sec):	0 (Y+R=4.0 sec)	Average Delay (sec/veh):	10.9
Optimal Cycle:	30	Level Of Service:	B

Street Name:	Jefferson Ave						Lemon St					
Approach:	North Bound			South Bound			East Bound			West Bound		
Movement:	L - T - R			L - T - R			L - T - R			L - T - R		
Control:	Protected			Protected			Permitted			Permitted		
Rights:	Include			Include			Include			Include		
Min. Green:	0	0	0	0	0	0	0	0	0	0	0	0
Lanes:	1 0	1 0	1	1 0	1 0	1	0 0	1! 0	0	0 0	1! 0	0
Volume Module:												
Base Vol:	76	257	0	1	501	61	21	1	82	1	3	2
Growth Adj:	1.00	1.00	1.00	1.00	1.00	1.00	1.00	1.00	1.00	1.00	1.00	1.00
Initial Bse:	76	257	0	1	501	61	21	1	82	1	3	2
User Adj:	1.00	1.00	1.00	1.00	1.00	1.00	1.00	1.00	1.00	1.00	1.00	1.00
PHF Adj:	1.00	1.00	1.00	1.00	1.00	1.00	1.00	1.00	1.00	1.00	1.00	1.00
PHF Volume:	76	257	0	1	501	61	21	1	82	1	3	2
Reduct Vol:	0	0	0	0	0	0	0	0	0	0	0	0
Reduced Vol:	76	257	0	1	501	61	21	1	82	1	3	2
PCE Adj:	1.00	1.00	1.00	1.00	1.00	1.00	1.00	1.00	1.00	1.00	1.00	1.00
MLF Adj:	1.00	1.00	1.00	1.00	1.00	1.00	1.00	1.00	1.00	1.00	1.00	1.00
FinalVolume:	76	257	0	1	501	61	21	1	82	1	3	2
Saturation Flow Module:												
Sat/Lane:	1900	1900	1900	1900	1900	1900	1900	1900	1900	1900	1900	1900
Adjustment:	0.95	1.00	1.00	0.95	1.00	0.85	0.85	0.85	0.85	0.93	0.93	0.93
Lanes:	1.00	1.00	1.00	1.00	1.00	1.00	0.20	0.01	0.79	0.17	0.50	0.33
Final Sat.:	1805	1900	1900	1805	1900	1615	328	16	1279	295	885	590
Capacity Analysis Module:												
Vol/Sat:	0.04	0.14	0.00	0.00	0.26	0.04	0.06	0.06	0.06	0.00	0.00	0.00
Crit Moves:	****				****			****				
Green/Cycle:	0.11	0.82	0.00	0.00	0.71	0.71	0.17	0.17	0.17	0.17	0.17	0.17
Volume/Cap:	0.37	0.16	0.00	0.16	0.37	0.05	0.37	0.37	0.37	0.02	0.02	0.02
Delay/Veh:	42.1	1.9	0.0	62.1	5.8	4.3	37.3	37.3	37.3	34.3	34.3	34.3
User DelAdj:	1.00	1.00	1.00	1.00	1.00	1.00	1.00	1.00	1.00	1.00	1.00	1.00
AdjDel/Veh:	42.1	1.9	0.0	62.1	5.8	4.3	37.3	37.3	37.3	34.3	34.3	34.3
LOS by Move:	D	A	A	E	A	A	D	D	D	C	C	C
HCM2kAvgQ:	3	2	0	0	6	1	3	3	3	0	0	0

Note: Queue reported is the number of cars per lane.

City of Murrieta General Plan
Existing
AM Peak Hour

Level Of Service Computation Report
2000 HCM Operations Method (Base Volume Alternative)

Intersection #44 Jefferson Ave & Kalmia St

Cycle (sec):	100	Critical Vol./Cap.(X):	0.449
Loss Time (sec):	0 (Y+R=4.0 sec)	Average Delay (sec/veh):	26.2
Optimal Cycle:	41	Level Of Service:	C

Street Name:	Jefferson Ave						Kalmia St					
Approach:	North Bound			South Bound			East Bound			West Bound		
Movement:	L - T - R			L - T - R			L - T - R			L - T - R		
Control:	Protected			Protected			Protected			Protected		
Rights:	Include			Include			Include			Include		
Min. Green:	0	0	0	0	0	0	0	0	0	0	0	0
Lanes:	1 0	1 0	1	1 0	1 1	0	1 0	2 0	1	1 0	1 0	1
Volume Module:												
Base Vol:	115	126	97	265	273	52	19	518	207	138	428	200
Growth Adj:	1.00	1.00	1.00	1.00	1.00	1.00	1.00	1.00	1.00	1.00	1.00	1.00
Initial Bse:	115	126	97	265	273	52	19	518	207	138	428	200
User Adj:	1.00	1.00	1.00	1.00	1.00	1.00	1.00	1.00	1.00	1.00	1.00	1.00
PHF Adj:	1.00	1.00	1.00	1.00	1.00	1.00	1.00	1.00	1.00	1.00	1.00	1.00
PHF Volume:	115	126	97	265	273	52	19	518	207	138	428	200
Reduct Vol:	0	0	0	0	0	0	0	0	0	0	0	0
Reduced Vol:	115	126	97	265	273	52	19	518	207	138	428	200
PCE Adj:	1.00	1.00	1.00	1.00	1.00	1.00	1.00	1.00	1.00	1.00	1.00	1.00
MLF Adj:	1.00	1.00	1.00	1.00	1.00	1.00	1.00	1.00	1.00	1.00	1.00	1.00
FinalVolume:	115	126	97	265	273	52	19	518	207	138	428	200
Saturation Flow Module:												
Sat/Lane:	1900	1900	1900	1900	1900	1900	1900	1900	1900	1900	1900	1900
Adjustment:	0.95	1.00	0.85	0.95	0.93	0.93	0.95	0.95	0.85	0.95	1.00	0.85
Lanes:	1.00	1.00	1.00	1.00	1.68	0.32	1.00	2.00	1.00	1.00	1.00	1.00
Final Sat.:	1805	1900	1615	1805	2960	564	1805	3610	1615	1805	1900	1615
Capacity Analysis Module:												
Vol/Sat:	0.06	0.07	0.06	0.15	0.09	0.09	0.01	0.14	0.13	0.08	0.23	0.12
Crit Moves:		****		****			****				****	
Green/Cycle:	0.19	0.15	0.15	0.33	0.28	0.28	0.02	0.34	0.34	0.18	0.50	0.50
Volume/Cap:	0.33	0.45	0.41	0.45	0.33	0.33	0.45	0.42	0.37	0.42	0.45	0.25
Delay/Veh:	35.2	40.0	39.8	27.1	28.7	28.7	55.6	25.5	25.2	37.0	16.4	14.3
User DelAdj:	1.00	1.00	1.00	1.00	1.00	1.00	1.00	1.00	1.00	1.00	1.00	1.00
AdjDel/Veh:	35.2	40.0	39.8	27.1	28.7	28.7	55.6	25.5	25.2	37.0	16.4	14.3
LOS by Move:	D	D	D	C	C	C	E	C	C	D	B	B
HCM2kAvgQ:	3	4	3	7	4	4	1	7	5	4	8	3

Note: Queue reported is the number of cars per lane.

City of Murrieta General Plan
Existing
AM Peak Hour

Level Of Service Computation Report
2000 HCM Operations Method (Base Volume Alternative)

Intersection #45 Jefferson Ave & Juniper St

Cycle (sec): 100 Critical Vol./Cap.(X): 0.243
Loss Time (sec): 0 (Y+R=4.0 sec) Average Delay (sec/veh): 18.6
Optimal Cycle: 30 Level Of Service: B

Street Name:	Jefferson Ave						Juniper St					
Approach:	North Bound			South Bound			East Bound			West Bound		
Movement:	L - T - R			L - T - R			L - T - R			L - T - R		
Control:	Protected			Protected			Protected			Protected		
Rights:	Include			Include			Include			Include		
Min. Green:	0	0	0	0	0	0	0	0	0	0	0	0
Lanes:	1 0	2 0	1	1 0	2 0	1	1 0	1 1	0	1 0	1 1	0
Volume Module:												
Base Vol:	69	258	15	37	526	31	54	84	79	8	78	23
Growth Adj:	1.00	1.00	1.00	1.00	1.00	1.00	1.00	1.00	1.00	1.00	1.00	1.00
Initial Bse:	69	258	15	37	526	31	54	84	79	8	78	23
User Adj:	1.00	1.00	1.00	1.00	1.00	1.00	1.00	1.00	1.00	1.00	1.00	1.00
PHF Adj:	1.00	1.00	1.00	1.00	1.00	1.00	1.00	1.00	1.00	1.00	1.00	1.00
PHF Volume:	69	258	15	37	526	31	54	84	79	8	78	23
Reduct Vol:	0	0	0	0	0	0	0	0	0	0	0	0
Reduced Vol:	69	258	15	37	526	31	54	84	79	8	78	23
PCE Adj:	1.00	1.00	1.00	1.00	1.00	1.00	1.00	1.00	1.00	1.00	1.00	1.00
MLF Adj:	1.00	1.00	1.00	1.00	1.00	1.00	1.00	1.00	1.00	1.00	1.00	1.00
FinalVolume:	69	258	15	37	526	31	54	84	79	8	78	23
Saturation Flow Module:												
Sat/Lane:	1900	1900	1900	1900	1900	1900	1900	1900	1900	1900	1900	1900
Adjustment:	0.95	0.95	0.85	0.95	0.95	0.85	0.95	0.88	0.88	0.95	0.92	0.92
Lanes:	1.00	2.00	1.00	1.00	2.00	1.00	1.00	1.03	0.97	1.00	1.54	0.46
Final Sat.:	1805	3610	1615	1805	3610	1615	1805	1725	1622	1805	2693	794
Capacity Analysis Module:												
Vol/Sat:	0.04	0.07	0.01	0.02	0.15	0.02	0.03	0.05	0.05	0.00	0.03	0.03
Crit Moves:	****				****		****				****	
Green/Cycle:	0.16	0.59	0.59	0.17	0.60	0.60	0.12	0.22	0.22	0.02	0.12	0.12
Volume/Cap:	0.24	0.12	0.02	0.12	0.24	0.03	0.24	0.22	0.22	0.22	0.24	0.24
Delay/Veh:	37.4	9.1	8.5	35.4	9.4	8.2	40.2	31.9	31.9	51.2	40.2	40.2
User DelAdj:	1.00	1.00	1.00	1.00	1.00	1.00	1.00	1.00	1.00	1.00	1.00	1.00
AdjDel/Veh:	37.4	9.1	8.5	35.4	9.4	8.2	40.2	31.9	31.9	51.2	40.2	40.2
LOS by Move:	D	A	A	D	A	A	D	C	C	D	D	D
HCM2kAvgQ:	2	2	0	1	4	0	2	2	2	0	2	2

Note: Queue reported is the number of cars per lane.

City of Murrieta General Plan
Existing
AM Peak Hour

Level Of Service Computation Report
2000 HCM Operations Method (Base Volume Alternative)

Intersection #46 Jefferson Ave & Ivy St/Los Alamos Rd

Cycle (sec): 100 Critical Vol./Cap.(X): 0.345
Loss Time (sec): 0 (Y+R=4.0 sec) Average Delay (sec/veh): 27.9
Optimal Cycle: 35 Level Of Service: C

Street Name:	Jefferson Ave						Ivy St/Los Alamos Rd					
Approach:	North Bound			South Bound			East Bound			West Bound		
Movement:	L - T - R			L - T - R			L - T - R			L - T - R		
Control:	Protected			Protected			Protected			Protected		
Rights:	Include			Include			Include			Include		
Min. Green:	0	0	0	0	0	0	0	0	0	0	0	0
Lanes:	1 0	2 0	1	1 0	2 0	1	1 0	1 1	0	1 0	1 0	1
Volume Module:												
Base Vol:	100	171	39	152	441	37	27	145	102	171	120	132
Growth Adj:	1.00	1.00	1.00	1.00	1.00	1.00	1.00	1.00	1.00	1.00	1.00	1.00
Initial Bse:	100	171	39	152	441	37	27	145	102	171	120	132
User Adj:	1.00	1.00	1.00	1.00	1.00	1.00	1.00	1.00	1.00	1.00	1.00	1.00
PHF Adj:	1.00	1.00	1.00	1.00	1.00	1.00	1.00	1.00	1.00	1.00	1.00	1.00
PHF Volume:	100	171	39	152	441	37	27	145	102	171	120	132
Reduct Vol:	0	0	0	0	0	0	0	0	0	0	0	0
Reduced Vol:	100	171	39	152	441	37	27	145	102	171	120	132
PCE Adj:	1.00	1.00	1.00	1.00	1.00	1.00	1.00	1.00	1.00	1.00	1.00	1.00
MLF Adj:	1.00	1.00	1.00	1.00	1.00	1.00	1.00	1.00	1.00	1.00	1.00	1.00
FinalVolume:	100	171	39	152	441	37	27	145	102	171	120	132
Saturation Flow Module:												
Sat/Lane:	1900	1900	1900	1900	1900	1900	1900	1900	1900	1900	1900	1900
Adjustment:	0.95	0.95	0.85	0.95	0.95	0.85	0.95	0.89	0.89	0.95	1.00	0.85
Lanes:	1.00	2.00	1.00	1.00	2.00	1.00	1.00	1.17	0.83	1.00	1.00	1.00
Final Sat.:	1805	3610	1615	1805	3610	1615	1805	1988	1398	1805	1900	1615
Capacity Analysis Module:												
Vol/Sat:	0.06	0.05	0.02	0.08	0.12	0.02	0.01	0.07	0.07	0.09	0.06	0.08
Crit Moves:	****				****			****		****		
Green/Cycle:	0.16	0.19	0.19	0.33	0.35	0.35	0.08	0.21	0.21	0.27	0.41	0.41
Volume/Cap:	0.35	0.26	0.13	0.26	0.35	0.06	0.20	0.35	0.35	0.35	0.15	0.20
Delay/Veh:	38.0	35.1	34.2	24.8	23.9	21.4	44.1	33.8	33.8	29.5	18.6	19.1
User DelAdj:	1.00	1.00	1.00	1.00	1.00	1.00	1.00	1.00	1.00	1.00	1.00	1.00
AdjDel/Veh:	38.0	35.1	34.2	24.8	23.9	21.4	44.1	33.8	33.8	29.5	18.6	19.1
LOS by Move:	D	D	C	C	C	C	D	C	C	C	B	B
HCM2kAvgQ:	3	2	1	3	5	1	1	4	4	4	2	3

Note: Queue reported is the number of cars per lane.

City of Murrieta General Plan
Existing
AM Peak Hour

Level Of Service Computation Report
2000 HCM Operations Method (Base Volume Alternative)

Intersection #47 Madison Ave & Kalmia St

Cycle (sec): 100 Critical Vol./Cap.(X): 0.320
Loss Time (sec): 0 (Y+R=4.0 sec) Average Delay (sec/veh): 16.2
Optimal Cycle: 34 Level Of Service: B

Street Name:	Madison Ave									Kalmia St					
Approach:	North Bound			South Bound			East Bound			West Bound					
Movement:	L	- T	- R	L	- T	- R	L	- T	- R	L	- T	- R			
Control:	Protected			Protected			Protected			Protected					
Rights:	Include			Include			Include			Include					
Min. Green:	0	0	0	0	0	0	0	0	0	0	0	0			
Lanes:	1	0	1! 0	1	0	0	0	0	0	0	3	0	1	2	0	2	0	0
Volume Module:															
Base Vol:	108	0	237	0	0	0	0	765	107	310	772	0			
Growth Adj:	1.00	1.00	1.00	1.00	1.00	1.00	1.00	1.00	1.00	1.00	1.00	1.00			
Initial Bse:	108	0	237	0	0	0	0	765	107	310	772	0			
User Adj:	1.00	1.00	1.00	1.00	1.00	1.00	1.00	1.00	1.00	1.00	1.00	1.00			
PHF Adj:	1.00	1.00	1.00	1.00	1.00	1.00	1.00	1.00	1.00	1.00	1.00	1.00			
PHF Volume:	108	0	237	0	0	0	0	765	107	310	772	0			
Reduct Vol:	0	0	0	0	0	0	0	0	0	0	0	0			
Reduced Vol:	108	0	237	0	0	0	0	765	107	310	772	0			
PCE Adj:	1.00	1.00	1.00	1.00	1.00	1.00	1.00	1.00	1.00	1.00	1.00	1.00			
MLF Adj:	1.00	1.00	1.00	1.00	1.00	1.00	1.00	1.00	1.00	1.00	1.00	1.00			
FinalVolume:	108	0	237	0	0	0	0	765	107	310	772	0			
Saturation Flow Module:															
Sat/Lane:	1900	1900	1900	1900	1900	1900	1900	1900	1900	1900	1900	1900			
Adjustment:	0.88	1.00	0.88	1.00	1.00	1.00	1.00	0.91	0.85	0.92	0.95	1.00			
Lanes:	1.31	0.00	1.69	0.00	0.00	0.00	0.00	3.00	1.00	2.00	2.00	0.00			
Final Sat.:	2204	0	2832	0	0	0	0	5187	1615	3502	3610	0			
Capacity Analysis Module:															
Vol/Sat:	0.05	0.00	0.08	0.00	0.00	0.00	0.00	0.15	0.07	0.09	0.21	0.00			
Crit Moves:			****					****		****					
Green/Cycle:	0.26	0.00	0.26	0.00	0.00	0.00	0.00	0.46	0.46	0.28	0.74	0.00			
Volume/Cap:	0.19	0.00	0.32	0.00	0.00	0.00	0.00	0.32	0.14	0.32	0.29	0.00			
Delay/Veh:	28.7	0.0	29.9	0.0	0.0	0.0	0.0	17.1	15.6	28.9	4.4	0.0			
User DelAdj:	1.00	1.00	1.00	1.00	1.00	1.00	1.00	1.00	1.00	1.00	1.00	1.00			
AdjDel/Veh:	28.7	0.0	29.9	0.0	0.0	0.0	0.0	17.1	15.6	28.9	4.4	0.0			
LOS by Move:	C	A	C	A	A	A	A	B	B	C	A	A			
HCM2kAvgQ:	2	0	4	0	0	0	0	5	2	4	4	0			

Note: Queue reported is the number of cars per lane.

City of Murrieta General Plan
Existing
AM Peak Hour

Level Of Service Computation Report
2000 HCM Operations Method (Base Volume Alternative)

Intersection #48 Madison Ave/I-15 SB Ramps & Kalmia St

Cycle (sec): 100 Critical Vol./Cap.(X): 0.537
Loss Time (sec): 0 (Y+R=4.0 sec) Average Delay (sec/veh): 20.4
Optimal Cycle: 49 Level Of Service: C

Street Name:	Madison Ave/I-15 SB Ramps									Kalmia St					
Approach:	North Bound			South Bound			East Bound			West Bound					
Movement:	L	- T	- R	L	- T	- R	L	- T	- R	L	- T	- R			
Control:	Protected			Protected			Protected			Protected					
Rights:	Include			Include			Include			Include					
Min. Green:	0	0	0	0	0	0	0	0	0	0	0	0			
Lanes:	0	0	0	0	0	1	0	0	1	0	0	0	2	0	1	2	0	0
Volume Module:															
Base Vol:	0	0	0	305	2	278	0	483	373	412	773	0			
Growth Adj:	1.00	1.00	1.00	1.00	1.00	1.00	1.00	1.00	1.00	1.00	1.00	1.00			
Initial Bse:	0	0	0	305	2	278	0	483	373	412	773	0			
User Adj:	1.00	1.00	1.00	1.00	1.00	1.00	1.00	1.00	1.00	1.00	1.00	1.00			
PHF Adj:	1.00	1.00	1.00	1.00	1.00	1.00	1.00	1.00	1.00	1.00	1.00	1.00			
PHF Volume:	0	0	0	305	2	278	0	483	373	412	773	0			
Reduct Vol:	0	0	0	0	0	0	0	0	0	0	0	0			
Reduced Vol:	0	0	0	305	2	278	0	483	373	412	773	0			
PCE Adj:	1.00	1.00	1.00	1.00	1.00	1.00	1.00	1.00	1.00	1.00	1.00	1.00			
MLF Adj:	1.00	1.00	1.00	1.00	1.00	1.00	1.00	1.00	1.00	1.00	1.00	1.00			
FinalVolume:	0	0	0	305	2	278	0	483	373	412	773	0			
Saturation Flow Module:															
Sat/Lane:	1900	1900	1900	1900	1900	1900	1900	1900	1900	1900	1900	1900			
Adjustment:	1.00	1.00	1.00	0.85	0.85	0.85	1.00	0.95	0.85	0.92	0.95	1.00			
Lanes:	0.00	0.00	0.00	1.00	0.01	0.99	0.00	2.00	1.00	2.00	2.00	0.00			
Final Sat.:	0	0	0	1615	12	1605	0	3610	1615	3502	3610	0			
Capacity Analysis Module:															
Vol/Sat:	0.00	0.00	0.00	0.19	0.17	0.17	0.00	0.13	0.23	0.12	0.21	0.00			
Crit Moves:				****					****	****					
Green/Cycle:	0.00	0.00	0.00	0.35	0.35	0.35	0.00	0.43	0.43	0.22	0.65	0.00			
Volume/Cap:	0.00	0.00	0.00	0.54	0.49	0.49	0.00	0.31	0.54	0.54	0.33	0.00			
Delay/Veh:	0.0	0.0	0.0	27.0	26.1	26.1	0.0	18.9	22.0	35.3	7.9	0.0			
User DelAdj:	1.00	1.00	1.00	1.00	1.00	1.00	1.00	1.00	1.00	1.00	1.00	1.00			
AdjDel/Veh:	0.0	0.0	0.0	27.0	26.1	26.1	0.0	18.9	22.0	35.3	7.9	0.0			
LOS by Move:	A	A	A	C	C	C	A	B	C	D	A	A			
HCM2kAvgQ:	0	0	0	8	7	7	0	5	9	6	6	0			

Note: Queue reported is the number of cars per lane.

City of Murrieta General Plan
Existing
AM Peak Hour

Level Of Service Computation Report
2000 HCM Unsignalized Method (Base Volume Alternative)

Intersection #49 Monroe Ave & Murrieta Hot Springs Rd

Average Delay (sec/veh): 1.0 Worst Case Level Of Service: C[15.8]

Street Name:	Monroe Ave									Murrieta Hot Springs Rd							
Approach:	North Bound					South Bound				East Bound				West Bound			
Movement:	L	-	T	-	R	L	-	T	-	R	L	-	T	-	R	L	-	T	-	R
Control:	Stop Sign					Stop Sign					Uncontrolled					Uncontrolled				
Rights:	Include					Include					Include					Include				
Lanes:	0	0	0	0	0	0	0	0	0	1	1	0	4	0	0	0	0	3	0	1
Volume Module:																				
Base Vol:	0	0	0	0	0	71	125	1097	0	0	1463	25								
Growth Adj:	1.00	1.00	1.00	1.00	1.00	1.00	1.00	1.00	1.00	1.00	1.00	1.00								
Initial Bse:	0	0	0	0	0	71	125	1097	0	0	1463	25								
User Adj:	1.00	1.00	1.00	1.00	1.00	1.00	1.00	1.00	1.00	1.00	1.00	1.00								
PHF Adj:	1.00	1.00	1.00	1.00	1.00	1.00	1.00	1.00	1.00	1.00	1.00	1.00								
PHF Volume:	0	0	0	0	0	71	125	1097	0	0	1463	25								
Reduct Vol:	0	0	0	0	0	0	0	0	0	0	0	0								
FinalVolume:	0	0	0	0	0	71	125	1097	0	0	1463	25								
Critical Gap Module:																				
Critical Gp:	xxxxx	xxxx	xxxxx	xxxxx	xxxx	6.9	4.1	xxxx	xxxxx	xxxxx	xxxx	xxxxx								
FollowUpTim:	xxxxx	xxxx	xxxxx	xxxxx	xxxx	3.3	2.2	xxxx	xxxxx	xxxxx	xxxx	xxxxx								
Capacity Module:																				
Cnflict Vol:	xxxx	xxxx	xxxxx	xxxx	xxxx	488	1488	xxxx	xxxxx	xxxx	xxxx	xxxxx								
Potent Cap.:	xxxx	xxxx	xxxxx	xxxx	xxxx	531	458	xxxx	xxxxx	xxxx	xxxx	xxxxx								
Move Cap.:	xxxx	xxxx	xxxxx	xxxx	xxxx	531	458	xxxx	xxxxx	xxxx	xxxx	xxxxx								
Volume/Cap:	xxxx	xxxx	xxxx	xxxx	xxxx	0.13	0.27	xxxx	xxxx	xxxx	xxxx	xxxx								
Level Of Service Module:																				
2Way95thQ:	xxxx	xxxx	xxxxx	xxxx	xxxx	0.5	1.1	xxxx	xxxxx	xxxx	xxxx	xxxxx								
Control Del:	xxxxx	xxxx	xxxxx	xxxxx	xxxx	12.8	15.8	xxxx	xxxxx	xxxxx	xxxx	xxxxx								
LOS by Move:	*	*	*	*	*	B	C	*	*	*	*	*								
Movement:	LT - LTR - RT					LT - LTR - RT					LT - LTR - RT					LT - LTR - RT				
Shared Cap.:	xxxx	xxxx	xxxxx	xxxx	xxxx	xxxxx	xxxx	xxxx	xxxxx	xxxx	xxxx	xxxxx								
SharedQueue:	xxxxx	xxxx	xxxxx	xxxxx	xxxx	xxxxx	xxxxx	xxxx	xxxxx	xxxxx	xxxx	xxxxx								
Shrd ConDel:	xxxxx	xxxx	xxxxx	xxxxx	xxxx	xxxxx	xxxxx	xxxx	xxxxx	xxxxx	xxxx	xxxxx								
Shared LOS:	*	*	*	*	*	*	*	*	*	*	*	*								
ApproachDel:	xxxxxx				12.8		xxxxxx				xxxxxx									
ApproachLOS:	*				B		*				*									

Note: Queue reported is the number of cars per lane.

City of Murrieta General Plan
Existing
AM Peak Hour

Level Of Service Computation Report
2000 HCM Operations Method (Base Volume Alternative)

Intersection #50 Hancock Ave & Murrieta Hot Springs Rd

Cycle (sec): 100 Critical Vol./Cap.(X): 0.428
Loss Time (sec): 0 (Y+R=4.0 sec) Average Delay (sec/veh): 11.7
Optimal Cycle: 40 Level Of Service: B

Street Name:	Hancock Ave									Murrieta Hot Springs Rd							
Approach:	North Bound					South Bound				East Bound				West Bound			
Movement:	L	-	T	-	R	L	-	T	-	R	L	-	T	-	R	L	-	T	-	R
Control:	Protected					Protected					Protected					Protected				
Rights:	Include					Include					Include					Include				
Min. Green:	0	0	0	0	0	0	0	0	0	0	0	0	0	0	0	0	0	0	0	0
Lanes:	0	0	0	0	0	2	0	0	0	2	2	0	4	0	0	0	0	3	0	1
Volume Module:																				
Base Vol:	0	0	0	264	0	147	227	884	0	0	1346	464								
Growth Adj:	1.00	1.00	1.00	1.00	1.00	1.00	1.00	1.00	1.00	1.00	1.00	1.00								
Initial Bse:	0	0	0	264	0	147	227	884	0	0	1346	464								
User Adj:	1.00	1.00	1.00	1.00	1.00	1.00	1.00	1.00	1.00	1.00	1.00	1.00								
PHF Adj:	1.00	1.00	1.00	1.00	1.00	1.00	1.00	1.00	1.00	1.00	1.00	1.00								
PHF Volume:	0	0	0	264	0	147	227	884	0	0	1346	464								
Reduct Vol:	0	0	0	0	0	0	0	0	0	0	0	0								
Reduced Vol:	0	0	0	264	0	147	227	884	0	0	1346	464								
PCE Adj:	1.00	1.00	1.00	1.00	1.00	1.00	1.00	1.00	1.00	1.00	1.00	1.00								
MLF Adj:	1.00	1.00	1.00	1.00	1.00	1.00	1.00	1.00	1.00	1.00	1.00	1.00								
FinalVolume:	0	0	0	264	0	147	227	884	0	0	1346	464								
Saturation Flow Module:																				
Sat/Lane:	1900	1900	1900	1900	1900	1900	1900	1900	1900	1900	1900	1900								
Adjustment:	1.00	1.00	1.00	0.92	1.00	0.75	0.92	0.91	1.00	1.00	0.91	0.85								
Lanes:	0.00	0.00	0.00	2.00	0.00	2.00	2.00	4.00	0.00	0.00	3.00	1.00								
Final Sat.:	0	0	0	3502	0	2842	3502	6916	0	0	5187	1615								
Capacity Analysis Module:																				
Vol/Sat:	0.00	0.00	0.00	0.08	0.00	0.05	0.06	0.13	0.00	0.00	0.26	0.29								
Crit Moves:				****			****					****								
Green/Cycle:	0.00	0.00	0.00	0.18	0.00	0.18	0.15	0.82	0.00	0.00	0.67	0.67								
Volume/Cap:	0.00	0.00	0.00	0.43	0.00	0.29	0.43	0.16	0.00	0.00	0.39	0.43								
Delay/Veh:	0.0	0.0	0.0	37.2	0.0	36.1	39.0	1.8	0.0	0.0	7.3	7.8								
User DelAdj:	1.00	1.00	1.00	1.00	1.00	1.00	1.00	1.00	1.00	1.00	1.00	1.00								
AdjDel/Veh:	0.0	0.0	0.0	37.2	0.0	36.1	39.0	1.8	0.0	0.0	7.3	7.8								
LOS by Move:	A	A	A	D	A	D	D	A	A	A	A	A								
HCM2kAvgQ:	0	0	0	4	0	2	4	2	0	0	7	7								

Note: Queue reported is the number of cars per lane.

City of Murrieta General Plan
Existing
AM Peak Hour

Level Of Service Computation Report
2000 HCM Operations Method (Base Volume Alternative)

****

Intersection #51 Alta Murrieta Dr & Murrieta Hot Springs Rd

****

Cycle (sec): 100 Critical Vol./Cap.(X): 0.432
Loss Time (sec): 0 (Y+R=4.0 sec) Average Delay (sec/veh): 21.3
Optimal Cycle: 40 Level Of Service: C

****

Street Name:	Alta Murrieta Dr									Murrieta Hot Springs Rd		
Approach:	North Bound			South Bound			East Bound			West Bound		
Movement:	L - T - R			L - T - R			L - T - R			L - T - R		
Control:	Protected			Protected			Protected			Protected		
Rights:	Include			Include			Include			Include		
Min. Green:	0	0	0	0	0	0	0	0	0	0	0	0
Lanes:	2 0	1 0	1	2 0	0 1	1	2 0	2 1	0	2 0	4 0	1
Volume Module:												
Base Vol:	175	57	14	61	94	297	249	995	235	72	1350	107
Growth Adj:	1.00	1.00	1.00	1.00	1.00	1.00	1.00	1.00	1.00	1.00	1.00	1.00
Initial Bse:	175	57	14	61	94	297	249	995	235	72	1350	107
User Adj:	1.00	1.00	1.00	1.00	1.00	1.00	1.00	1.00	1.00	1.00	1.00	1.00
PHF Adj:	1.00	1.00	1.00	1.00	1.00	1.00	1.00	1.00	1.00	1.00	1.00	1.00
PHF Volume:	175	57	14	61	94	297	249	995	235	72	1350	107
Reduct Vol:	0	0	0	0	0	0	0	0	0	0	0	0
Reduced Vol:	175	57	14	61	94	297	249	995	235	72	1350	107
PCE Adj:	1.00	1.00	1.00	1.00	1.00	1.00	1.00	1.00	1.00	1.00	1.00	1.00
MLF Adj:	1.00	1.00	1.00	1.00	1.00	1.00	1.00	1.00	1.00	1.00	1.00	1.00
FinalVolume:	175	57	14	61	94	297	249	995	235	72	1350	107
Saturation Flow Module:												
Sat/Lane:	1900	1900	1900	1900	1900	1900	1900	1900	1900	1900	1900	1900
Adjustment:	0.92	1.00	0.85	0.92	0.89	0.89	0.92	0.88	0.88	0.92	0.91	0.85
Lanes:	2.00	1.00	1.00	2.00	0.48	1.52	2.00	2.43	0.57	2.00	4.00	1.00
Final Sat.:	3502	1900	1615	3502	809	2557	3502	4074	962	3502	6916	1615
Capacity Analysis Module:												
Vol/Sat:	0.05	0.03	0.01	0.02	0.12	0.12	0.07	0.24	0.24	0.02	0.20	0.07
Crit Moves:	****				****		****				****	
Green/Cycle:	0.12	0.24	0.24	0.14	0.27	0.27	0.16	0.57	0.57	0.05	0.45	0.45
Volume/Cap:	0.43	0.12	0.04	0.12	0.43	0.43	0.43	0.43	0.43	0.43	0.43	0.15
Delay/Veh:	41.9	29.7	28.9	37.7	30.6	30.6	38.1	12.4	12.4	48.1	18.8	16.2
User DelAdj:	1.00	1.00	1.00	1.00	1.00	1.00	1.00	1.00	1.00	1.00	1.00	1.00
AdjDel/Veh:	41.9	29.7	28.9	37.7	30.6	30.6	38.1	12.4	12.4	48.1	18.8	16.2
LOS by Move:	D	C	C	D	C	C	D	B	B	D	B	B
HCM2kAvgQ:	3	1	0	1	5	5	4	8	8	2	8	2

****

Note: Queue reported is the number of cars per lane.

****

City of Murrieta General Plan
Existing
AM Peak Hour

Level Of Service Computation Report
2000 HCM Operations Method (Base Volume Alternative)

****

Intersection #52 Winchester Road - SR-79 & Murrieta Hot Springs Rd

****

Cycle (sec): 100 Critical Vol./Cap.(X): 0.606
Loss Time (sec): 0 (Y+R=4.0 sec) Average Delay (sec/veh): 24.0
Optimal Cycle: 58 Level Of Service: C

****

Street Name:	Winchester Road - SR-79									Murrieta Hot Springs Rd		
Approach:	North Bound			South Bound			East Bound			West Bound		
Movement:	L - T - R			L - T - R			L - T - R			L - T - R		
Control:	Protected			Protected			Protected			Protected		
Rights:	Include			Include			Include			Include		
Min. Green:	0	0	0	0	0	0	0	0	0	0	0	0
Lanes:	2 0	3 0	1	2 0	3 0	1	2 0	3 0	1	2 0	2 0	1
Volume Module:												
Base Vol:	118	729	135	128	1408	536	512	318	137	268	340	37
Growth Adj:	1.00	1.00	1.00	1.00	1.00	1.00	1.00	1.00	1.00	1.00	1.00	1.00
Initial Bse:	118	729	135	128	1408	536	512	318	137	268	340	37
User Adj:	1.00	1.00	1.00	1.00	1.00	1.00	1.00	1.00	1.00	1.00	1.00	1.00
PHF Adj:	1.00	1.00	1.00	1.00	1.00	1.00	1.00	1.00	1.00	1.00	1.00	1.00
PHF Volume:	118	729	135	128	1408	536	512	318	137	268	340	37
Reduct Vol:	0	0	0	0	0	0	0	0	0	0	0	0
Reduced Vol:	118	729	135	128	1408	536	512	318	137	268	340	37
PCE Adj:	1.00	1.00	1.00	1.00	1.00	1.00	1.00	1.00	1.00	1.00	1.00	1.00
MLF Adj:	1.00	1.00	1.00	1.00	1.00	1.00	1.00	1.00	1.00	1.00	1.00	1.00
FinalVolume:	118	729	135	128	1408	536	512	318	137	268	340	37
Saturation Flow Module:												
Sat/Lane:	1900	1900	1900	1900	1900	1900	1900	1900	1900	1900	1900	1900
Adjustment:	0.92	0.91	0.85	0.92	0.91	0.85	0.92	0.91	0.85	0.92	0.95	0.85
Lanes:	2.00	3.00	1.00	2.00	3.00	1.00	2.00	3.00	1.00	2.00	2.00	1.00
Final Sat.:	3502	5187	1615	3502	5187	1615	3502	5187	1615	3502	3610	1615
Capacity Analysis Module:												
Vol/Sat:	0.03	0.14	0.08	0.04	0.27	0.33	0.15	0.06	0.08	0.08	0.09	0.02
Crit Moves:	****					****	****				****	
Green/Cycle:	0.06	0.48	0.48	0.12	0.55	0.55	0.24	0.21	0.21	0.19	0.16	0.16
Volume/Cap:	0.61	0.29	0.17	0.29	0.50	0.61	0.61	0.29	0.41	0.41	0.61	0.15
Delay/Veh:	51.5	15.9	14.9	40.2	14.2	16.5	35.0	33.5	35.0	36.1	41.3	36.8
User DelAdj:	1.00	1.00	1.00	1.00	1.00	1.00	1.00	1.00	1.00	1.00	1.00	1.00
AdjDel/Veh:	51.5	15.9	14.9	40.2	14.2	16.5	35.0	33.5	35.0	36.1	41.3	36.8
LOS by Move:	D	B	B	D	B	B	C	C	D	D	D	D
HCM2kAvgQ:	3	5	2	2	10	12	8	3	4	4	6	1

****

Note: Queue reported is the number of cars per lane.

****

City of Murrieta General Plan
Existing
AM Peak Hour

Level Of Service Computation Report
2000 HCM Operations Method (Base Volume Alternative)

Intersection #53 Hancock Ave & Los Alamos Rd

Cycle (sec): 100 Critical Vol./Cap.(X): 0.613
Loss Time (sec): 0 (Y+R=4.0 sec) Average Delay (sec/veh): 28.4
Optimal Cycle: 59 Level Of Service: C

Street Name:	Hancock Ave						Los Alamos Rd					
Approach:	North Bound			South Bound			East Bound			West Bound		
Movement:	L - T - R			L - T - R			L - T - R			L - T - R		
Control:	Protected			Protected			Protected			Protected		
Rights:	Include			Include			Include			Include		
Min. Green:	0	0	0	0	0	0	0	0	0	0	0	0
Lanes:	1 0	1	1 0	2 0	0	1 0	1 0	1	1 0	1 0	1	1 0
Volume Module:												
Base Vol:	51	143	93	526	246	156	125	601	66	226	711	293
Growth Adj:	1.00	1.00	1.00	1.00	1.00	1.00	1.00	1.00	1.00	1.00	1.00	1.00
Initial Bse:	51	143	93	526	246	156	125	601	66	226	711	293
User Adj:	1.00	1.00	1.00	1.00	1.00	1.00	1.00	1.00	1.00	1.00	1.00	1.00
PHF Adj:	1.00	1.00	1.00	1.00	1.00	1.00	1.00	1.00	1.00	1.00	1.00	1.00
PHF Volume:	51	143	93	526	246	156	125	601	66	226	711	293
Reduct Vol:	0	0	0	0	0	0	0	0	0	0	0	0
Reduced Vol:	51	143	93	526	246	156	125	601	66	226	711	293
PCE Adj:	1.00	1.00	1.00	1.00	1.00	1.00	1.00	1.00	1.00	1.00	1.00	1.00
MLF Adj:	1.00	1.00	1.00	1.00	1.00	1.00	1.00	1.00	1.00	1.00	1.00	1.00
FinalVolume:	51	143	93	526	246	156	125	601	66	226	711	293
Saturation Flow Module:												
Sat/Lane:	1900	1900	1900	1900	1900	1900	1900	1900	1900	1900	1900	1900
Adjustment:	0.95	0.89	0.89	0.92	0.94	0.94	0.95	0.94	0.94	0.95	0.91	0.91
Lanes:	1.00	1.21	0.79	2.00	0.61	0.39	1.00	1.80	0.20	1.00	1.42	0.58
Final Sat.:	1805	2058	1339	3502	1095	695	1805	3204	352	1805	2444	1007
Capacity Analysis Module:												
Vol/Sat:	0.03	0.07	0.07	0.15	0.22	0.22	0.07	0.19	0.19	0.13	0.29	0.29
Crit Moves:	****				****		****				****	
Green/Cycle:	0.05	0.13	0.13	0.28	0.37	0.37	0.11	0.35	0.35	0.24	0.47	0.47
Volume/Cap:	0.61	0.53	0.53	0.53	0.61	0.61	0.61	0.53	0.53	0.53	0.61	0.61
Delay/Veh:	59.6	41.9	41.9	30.9	27.6	27.6	47.7	26.3	26.3	34.7	20.2	20.2
User DelAdj:	1.00	1.00	1.00	1.00	1.00	1.00	1.00	1.00	1.00	1.00	1.00	1.00
AdjDel/Veh:	59.6	41.9	41.9	30.9	27.6	27.6	47.7	26.3	26.3	34.7	20.2	20.2
LOS by Move:	E	D	D	C	C	C	D	C	C	C	C	C
HCM2kAvgQ:	3	4	4	7	11	11	5	9	9	7	12	12

Note: Queue reported is the number of cars per lane.

City of Murrieta General Plan
Existing
AM Peak Hour

Level Of Service Computation Report
2000 HCM Operations Method (Base Volume Alternative)

Intersection #54 I-215 SB Ramps & Los Alamos Rd

Cycle (sec): 100 Critical Vol./Cap.(X): 0.522
Loss Time (sec): 0 (Y+R=4.0 sec) Average Delay (sec/veh): 18.0
Optimal Cycle: 48 Level Of Service: B

Street Name:	I-215 SB Ramps						Los Alamos Rd					
Approach:	North Bound			South Bound			East Bound			West Bound		
Movement:	L - T - R			L - T - R			L - T - R			L - T - R		
Control:	Protected			Protected			Protected			Protected		
Rights:	Include			Include			Include			Include		
Min. Green:	0	0	0	0	0	0	0	0	0	0	0	0
Lanes:	0 0	0	0 0	1 0	1!	0 1	0 0	2	1 0	2 0	2	0 0
Volume Module:												
Base Vol:	0	0	0	119	1	497	0	801	426	250	899	0
Growth Adj:	1.00	1.00	1.00	1.00	1.00	1.00	1.00	1.00	1.00	1.00	1.00	1.00
Initial Bse:	0	0	0	119	1	497	0	801	426	250	899	0
User Adj:	1.00	1.00	1.00	1.00	1.00	1.00	1.00	1.00	1.00	1.00	1.00	1.00
PHF Adj:	1.00	1.00	1.00	1.00	1.00	1.00	1.00	1.00	1.00	1.00	1.00	1.00
PHF Volume:	0	0	0	119	1	497	0	801	426	250	899	0
Reduct Vol:	0	0	0	0	0	0	0	0	0	0	0	0
Reduced Vol:	0	0	0	119	1	497	0	801	426	250	899	0
PCE Adj:	1.00	1.00	1.00	1.00	1.00	1.00	1.00	1.00	1.00	1.00	1.00	1.00
MLF Adj:	1.00	1.00	1.00	1.00	1.00	1.00	1.00	1.00	1.00	1.00	1.00	1.00
FinalVolume:	0	0	0	119	1	497	0	801	426	250	899	0
Saturation Flow Module:												
Sat/Lane:	1900	1900	1900	1900	1900	1900	1900	1900	1900	1900	1900	1900
Adjustment:	1.00	1.00	1.00	0.85	0.85	0.85	1.00	0.86	0.86	0.92	0.95	1.00
Lanes:	0.00	0.00	0.00	1.19	0.01	1.80	0.00	2.00	1.00	2.00	2.00	0.00
Final Sat.:	0	0	0	1934	5	2926	0	3278	1639	3502	3610	0
Capacity Analysis Module:												
Vol/Sat:	0.00	0.00	0.00	0.06	0.19	0.17	0.00	0.24	0.26	0.07	0.25	0.00
Crit Moves:					****				****	****		
Green/Cycle:	0.00	0.00	0.00	0.37	0.37	0.37	0.00	0.50	0.50	0.14	0.63	0.00
Volume/Cap:	0.00	0.00	0.00	0.17	0.52	0.47	0.00	0.49	0.52	0.52	0.39	0.00
Delay/Veh:	0.0	0.0	0.0	21.5	25.3	24.5	0.0	16.8	17.2	41.2	9.0	0.0
User DelAdj:	1.00	1.00	1.00	1.00	1.00	1.00	1.00	1.00	1.00	1.00	1.00	1.00
AdjDel/Veh:	0.0	0.0	0.0	21.5	25.3	24.5	0.0	16.8	17.2	41.2	9.0	0.0
LOS by Move:	A	A	A	C	C	C	A	B	B	D	A	A
HCM2kAvgQ:	0	0	0	2	8	7	0	9	10	4	7	0

Note: Queue reported is the number of cars per lane.

City of Murrieta General Plan
Existing
AM Peak Hour

Level Of Service Computation Report
2000 HCM Operations Method (Base Volume Alternative)

Intersection #55 I-215 NB Ramps & Los Alamos Rd

Cycle (sec): 100 Critical Vol./Cap.(X): 0.462
Loss Time (sec): 0 (Y+R=4.0 sec) Average Delay (sec/veh): 15.4
Optimal Cycle: 42 Level Of Service: B

Street Name:	I-215 NB Ramps						Los Alamos Rd					
Approach:	North Bound			South Bound			East Bound			West Bound		
Movement:	L - T - R			L - T - R			L - T - R			L - T - R		
Control:	Protected			Protected			Protected			Protected		
Rights:	Include			Include			Include			Include		
Min. Green:	0	0	0	0	0	0	0	0	0	0	0	0
Lanes:	1 0	0 1	0	0 0	0 0	0	2 0	3 0	0	0 0	2 0	1
Volume Module:												
Base Vol:	209	1	107	0	0	0	242	670	0	0	951	72
Growth Adj:	1.00	1.00	1.00	1.00	1.00	1.00	1.00	1.00	1.00	1.00	1.00	1.00
Initial Bse:	209	1	107	0	0	0	242	670	0	0	951	72
User Adj:	1.00	1.00	1.00	1.00	1.00	1.00	1.00	1.00	1.00	1.00	1.00	1.00
PHF Adj:	1.00	1.00	1.00	1.00	1.00	1.00	1.00	1.00	1.00	1.00	1.00	1.00
PHF Volume:	209	1	107	0	0	0	242	670	0	0	951	72
Reduct Vol:	0	0	0	0	0	0	0	0	0	0	0	0
Reduced Vol:	209	1	107	0	0	0	242	670	0	0	951	72
PCE Adj:	1.00	1.00	1.00	1.00	1.00	1.00	1.00	1.00	1.00	1.00	1.00	1.00
MLF Adj:	1.00	1.00	1.00	1.00	1.00	1.00	1.00	1.00	1.00	1.00	1.00	1.00
FinalVolume:	209	1	107	0	0	0	242	670	0	0	951	72
Saturation Flow Module:												
Sat/Lane:	1900	1900	1900	1900	1900	1900	1900	1900	1900	1900	1900	1900
Adjustment:	0.85	0.85	0.85	1.00	1.00	1.00	0.92	0.91	1.00	1.00	0.95	0.85
Lanes:	1.00	0.01	0.99	0.00	0.00	0.00	2.00	3.00	0.00	0.00	2.00	1.00
Final Sat.:	1615	15	1602	0	0	0	3502	5187	0	0	3610	1615
Capacity Analysis Module:												
Vol/Sat:	0.13	0.07	0.07	0.00	0.00	0.00	0.07	0.13	0.00	0.00	0.26	0.04
Crit Moves:	****						****				****	
Green/Cycle:	0.28	0.28	0.28	0.00	0.00	0.00	0.15	0.72	0.00	0.00	0.57	0.57
Volume/Cap:	0.46	0.24	0.24	0.00	0.00	0.00	0.46	0.18	0.00	0.00	0.46	0.08
Delay/Veh:	30.5	28.0	28.0	0.0	0.0	0.0	39.5	4.5	0.0	0.0	12.7	9.7
User DelAdj:	1.00	1.00	1.00	1.00	1.00	1.00	1.00	1.00	1.00	1.00	1.00	1.00
AdjDel/Veh:	30.5	28.0	28.0	0.0	0.0	0.0	39.5	4.5	0.0	0.0	12.7	9.7
LOS by Move:	C	C	C	A	A	A	D	A	A	A	B	A
HCM2kAvgQ:	6	3	3	0	0	0	4	2	0	0	9	1

Note: Queue reported is the number of cars per lane.

City of Murrieta General Plan
Existing
AM Peak Hour

Level Of Service Computation Report
2000 HCM Operations Method (Base Volume Alternative)

Intersection #56 Whitewood Rd & Los Alamos Rd

Cycle (sec): 100 Critical Vol./Cap.(X): 0.372
Loss Time (sec): 0 (Y+R=4.0 sec) Average Delay (sec/veh): 26.7
Optimal Cycle: 36 Level Of Service: C

Street Name:	Whitewood Rd						Los Alamos Rd					
Approach:	North Bound			South Bound			East Bound			West Bound		
Movement:	L - T - R			L - T - R			L - T - R			L - T - R		
Control:	Protected			Protected			Protected			Protected		
Rights:	Include			Include			Include			Include		
Min. Green:	0	0	0	0	0	0	0	0	0	0	0	0
Lanes:	1 0	1 1	0	1 0	2 0	1	1 0	2 0	1	1 0	1 1	0
Volume Module:												
Base Vol:	126	90	59	11	110	254	124	226	64	33	270	6
Growth Adj:	1.00	1.00	1.00	1.00	1.00	1.00	1.00	1.00	1.00	1.00	1.00	1.00
Initial Bse:	126	90	59	11	110	254	124	226	64	33	270	6
User Adj:	1.00	1.00	1.00	1.00	1.00	1.00	1.00	1.00	1.00	1.00	1.00	1.00
PHF Adj:	1.00	1.00	1.00	1.00	1.00	1.00	1.00	1.00	1.00	1.00	1.00	1.00
PHF Volume:	126	90	59	11	110	254	124	226	64	33	270	6
Reduct Vol:	0	0	0	0	0	0	0	0	0	0	0	0
Reduced Vol:	126	90	59	11	110	254	124	226	64	33	270	6
PCE Adj:	1.00	1.00	1.00	1.00	1.00	1.00	1.00	1.00	1.00	1.00	1.00	1.00
MLF Adj:	1.00	1.00	1.00	1.00	1.00	1.00	1.00	1.00	1.00	1.00	1.00	1.00
FinalVolume:	126	90	59	11	110	254	124	226	64	33	270	6
Saturation Flow Module:												
Sat/Lane:	1900	1900	1900	1900	1900	1900	1900	1900	1900	1900	1900	1900
Adjustment:	0.95	0.89	0.89	0.95	0.95	0.85	0.95	0.95	0.85	0.95	0.95	0.95
Lanes:	1.00	1.21	0.79	1.00	2.00	1.00	1.00	2.00	1.00	1.00	1.96	0.04
Final Sat.:	1805	2052	1345	1805	3610	1615	1805	3610	1615	1805	3521	78
Capacity Analysis Module:												
Vol/Sat:	0.07	0.04	0.04	0.01	0.03	0.16	0.07	0.06	0.04	0.02	0.08	0.08
Crit Moves:	****					****	****				****	
Green/Cycle:	0.19	0.54	0.54	0.07	0.42	0.42	0.18	0.30	0.30	0.09	0.21	0.21
Volume/Cap:	0.37	0.08	0.08	0.08	0.07	0.37	0.37	0.21	0.13	0.21	0.37	0.37
Delay/Veh:	36.2	11.3	11.3	43.4	17.2	20.1	36.4	26.1	25.5	43.0	34.5	34.5
User DelAdj:	1.00	1.00	1.00	1.00	1.00	1.00	1.00	1.00	1.00	1.00	1.00	1.00
AdjDel/Veh:	36.2	11.3	11.3	43.4	17.2	20.1	36.4	26.1	25.5	43.0	34.5	34.5
LOS by Move:	D	B	B	D	B	C	D	C	C	D	C	C
HCM2kAvgQ:	4	1	1	0	1	5	4	3	1	1	4	4

Note: Queue reported is the number of cars per lane.

City of Murrieta General Plan
Existing
AM Peak Hour

Level Of Service Computation Report
2000 HCM Operations Method (Base Volume Alternative)

Intersection #57 Whitewood Rd & Murrieta Hot Springs Rd

Cycle (sec): 100 Critical Vol./Cap.(X): 0.518
Loss Time (sec): 0 (Y+R=4.0 sec) Average Delay (sec/veh): 12.6
Optimal Cycle: 47 Level Of Service: B

Street Name:	Whitewood Rd						Murrieta Hot Springs Rd					
Approach:	North Bound			South Bound			East Bound			West Bound		
Movement:	L	- T	- R	L	- T	- R	L	- T	- R	L	- T	- R
Control:	Protected			Protected			Protected			Protected		
Rights:	Include			Include			Include			Include		
Min. Green:	0	0	0	0	0	0	0	0	0	0	0	0
Lanes:	1 0	0 1	0	2 0	1 0	1	1 0	2 1	0	1 0	2 1	0
Volume Module:												
Base Vol:	4	38	43	353	20	63	31	1106	4	23	1556	241
Growth Adj:	1.00	1.00	1.00	1.00	1.00	1.00	1.00	1.00	1.00	1.00	1.00	1.00
Initial Bse:	4	38	43	353	20	63	31	1106	4	23	1556	241
User Adj:	1.00	1.00	1.00	1.00	1.00	1.00	1.00	1.00	1.00	1.00	1.00	1.00
PHF Adj:	1.00	1.00	1.00	1.00	1.00	1.00	1.00	1.00	1.00	1.00	1.00	1.00
PHF Volume:	4	38	43	353	20	63	31	1106	4	23	1556	241
Reduct Vol:	0	0	0	0	0	0	0	0	0	0	0	0
Reduced Vol:	4	38	43	353	20	63	31	1106	4	23	1556	241
PCE Adj:	1.00	1.00	1.00	1.00	1.00	1.00	1.00	1.00	1.00	1.00	1.00	1.00
MLF Adj:	1.00	1.00	1.00	1.00	1.00	1.00	1.00	1.00	1.00	1.00	1.00	1.00
FinalVolume:	4	38	43	353	20	63	31	1106	4	23	1556	241
Saturation Flow Module:												
Sat/Lane:	1900	1900	1900	1900	1900	1900	1900	1900	1900	1900	1900	1900
Adjustment:	0.95	0.92	0.92	0.92	1.00	0.85	0.95	0.91	0.91	0.95	0.89	0.89
Lanes:	1.00	0.47	0.53	2.00	1.00	1.00	1.00	2.99	0.01	1.00	2.60	0.40
Final Sat.:	1805	820	928	3502	1900	1615	1805	5163	19	1805	4402	682
Capacity Analysis Module:												
Vol/Sat:	0.00	0.05	0.05	0.10	0.01	0.04	0.02	0.21	0.21	0.01	0.35	0.35
Crit Moves:		****		****			****				****	
Green/Cycle:	0.02	0.09	0.09	0.19	0.27	0.27	0.03	0.68	0.68	0.04	0.68	0.68
Volume/Cap:	0.15	0.52	0.52	0.52	0.04	0.15	0.52	0.32	0.32	0.32	0.52	0.52
Delay/Veh:	51.0	46.5	46.5	36.8	27.0	28.0	55.3	6.7	6.7	49.2	7.9	7.9
User DelAdj:	1.00	1.00	1.00	1.00	1.00	1.00	1.00	1.00	1.00	1.00	1.00	1.00
AdjDel/Veh:	51.0	46.5	46.5	36.8	27.0	28.0	55.3	6.7	6.7	49.2	7.9	7.9
LOS by Move:	D	D	D	D	C	C	E	A	A	D	A	A
HCM2kAvgQ:	0	3	3	6	0	2	2	5	5	1	10	10

Note: Queue reported is the number of cars per lane.

City of Murrieta General Plan
Existing
AM Peak Hour

Level Of Service Computation Report
2000 HCM Unsignalized Method (Base Volume Alternative)

Intersection #58 Adams Ave & Guava St

Average Delay (sec/veh): 4.9 Worst Case Level Of Service: A[8.6]

Street Name:	Adams Ave						Guava St					
Approach:	North Bound			South Bound			East Bound			West Bound		
Movement:	L	- T	- R	L	- T	- R	L	- T	- R	L	- T	- R
Control:	Uncontrolled			Uncontrolled			Stop Sign			Stop Sign		
Rights:	Include			Include			Include			Include		
Lanes:	0 0	0 1	0	0 1	0 0	0	0 0	0 0	0	0 0	1! 0	0
Volume Module:												
Base Vol:	0	13	2	94	67	0	0	0	0	3	0	44
Growth Adj:	1.00	1.00	1.00	1.00	1.00	1.00	1.00	1.00	1.00	1.00	1.00	1.00
Initial Bse:	0	13	2	94	67	0	0	0	0	3	0	44
User Adj:	1.00	1.00	1.00	1.00	1.00	1.00	1.00	1.00	1.00	1.00	1.00	1.00
PHF Adj:	1.00	1.00	1.00	1.00	1.00	1.00	1.00	1.00	1.00	1.00	1.00	1.00
PHF Volume:	0	13	2	94	67	0	0	0	0	3	0	44
Reduct Vol:	0	0	0	0	0	0	0	0	0	0	0	0
FinalVolume:	0	13	2	94	67	0	0	0	0	3	0	44
Critical Gap Module:												
Critical Gp:	xxxxx	xxxx	xxxxx	4.1	xxxx	xxxxx	xxxxx	xxxx	xxxxx	6.4	6.5	6.2
FollowUpTim:	xxxxx	xxxx	xxxxx	2.2	xxxx	xxxxx	xxxxx	xxxx	xxxxx	3.5	4.0	3.3
Capacity Module:												
Cnflict Vol:	xxxx	xxxx	xxxxx	15	xxxx	xxxxx	xxxx	xxxx	xxxxx	269	269	14
Potent Cap.:	xxxx	xxxx	xxxxx	1616	xxxx	xxxxx	xxxx	xxxx	xxxxx	725	641	1072
Move Cap.:	xxxx	xxxx	xxxxx	1616	xxxx	xxxxx	xxxx	xxxx	xxxxx	691	601	1072
Volume/Cap:	xxxx	xxxx	xxxx	0.06	xxxx	xxxx	xxxx	xxxx	xxxx	0.00	0.00	0.04
Level Of Service Module:												
2Way95thQ:	xxxx	xxxx	xxxxx	0.2	xxxx	xxxxx	xxxx	xxxx	xxxxx	xxxx	xxxx	xxxxx
Control Del:	xxxxx	xxxx	xxxxx	7.4	xxxx	xxxxx	xxxxx	xxxx	xxxxx	xxxxx	xxxx	xxxxx
LOS by Move:	*	*	*	A	*	*	*	*	*	*	*	*
Movement:	LT -	LTR -	RT	LT -	LTR -	RT	LT -	LTR -	RT	LT -	LTR -	RT
Shared Cap.:	xxxx	xxxx	xxxxx	xxxx	xxxx	xxxxx	xxxx	xxxx	xxxxx	xxxx	1035	xxxxx
SharedQueue:	xxxxx	xxxx	xxxxx	0.2	xxxx	xxxxx	xxxxx	xxxx	xxxxx	xxxxx	0.1	xxxxx
Shrd ConDel:	xxxxx	xxxx	xxxxx	7.4	xxxx	xxxxx	xxxxx	xxxx	xxxxx	xxxxx	8.6	xxxxx
Shared LOS:	*	*	*	A	*	*	*	*	*	*	A	*
ApproachDel:	xxxxxx			xxxxxx			xxxxxx				8.6	
ApproachLOS:	*			*			*				A	

Note: Queue reported is the number of cars per lane.

City of Murrieta General Plan
Existing
AM Peak Hour

Level Of Service Computation Report
2000 HCM Operations Method (Base Volume Alternative)

Intersection #59 Nutmeg St & Clinton Keith Rd

Cycle (sec): 100 Critical Vol./Cap.(X): 0.366
Loss Time (sec): 0 (Y+R=4.0 sec) Average Delay (sec/veh): 20.6
Optimal Cycle: 29 Level Of Service: C

Street Name:	Nutmeg St						Clinton Keith Rd					
Approach:	North Bound			South Bound			East Bound			West Bound		
Movement:	L - T - R			L - T - R			L - T - R			L - T - R		
Control:	Permitted			Permitted			Protected			Protected		
Rights:	Include			Include			Include			Include		
Min. Green:	0	0	0	0	0	0	0	0	0	0	0	0
Lanes:	1 0	1	1 0	1 0	1	1 0	1 0	1	1 0	1 0	1	1 0
Volume Module:												
Base Vol:	69	34	201	101	55	39	17	357	79	206	404	39
Growth Adj:	1.00	1.00	1.00	1.00	1.00	1.00	1.00	1.00	1.00	1.00	1.00	1.00
Initial Bse:	69	34	201	101	55	39	17	357	79	206	404	39
User Adj:	1.00	1.00	1.00	1.00	1.00	1.00	1.00	1.00	1.00	1.00	1.00	1.00
PHF Adj:	1.00	1.00	1.00	1.00	1.00	1.00	1.00	1.00	1.00	1.00	1.00	1.00
PHF Volume:	69	34	201	101	55	39	17	357	79	206	404	39
Reduct Vol:	0	0	0	0	0	0	0	0	0	0	0	0
Reduced Vol:	69	34	201	101	55	39	17	357	79	206	404	39
PCE Adj:	1.00	1.00	1.00	1.00	1.00	1.00	1.00	1.00	1.00	1.00	1.00	1.00
MLF Adj:	1.00	1.00	1.00	1.00	1.00	1.00	1.00	1.00	1.00	1.00	1.00	1.00
FinalVolume:	69	34	201	101	55	39	17	357	79	206	404	39
Saturation Flow Module:												
Sat/Lane:	1900	1900	1900	1900	1900	1900	1900	1900	1900	1900	1900	1900
Adjustment:	0.65	0.83	0.83	0.52	0.89	0.89	0.95	0.92	0.92	0.95	0.94	0.94
Lanes:	1.00	1.00	1.00	1.00	1.17	0.83	1.00	1.64	0.36	1.00	1.82	0.18
Final Sat.:	1243	1574	1574	980	1981	1405	1805	2876	636	1805	3249	314
Capacity Analysis Module:												
Vol/Sat:	0.06	0.02	0.13	0.10	0.03	0.03	0.01	0.12	0.12	0.11	0.12	0.12
Crit Moves:			****					****		****		
Green/Cycle:	0.35	0.35	0.35	0.35	0.35	0.35	0.05	0.34	0.34	0.31	0.61	0.61
Volume/Cap:	0.16	0.06	0.37	0.30	0.08	0.08	0.21	0.37	0.37	0.37	0.21	0.21
Delay/Veh:	22.6	21.7	24.7	24.1	21.8	21.8	47.2	25.1	25.1	27.1	8.9	8.9
User DelAdj:	1.00	1.00	1.00	1.00	1.00	1.00	1.00	1.00	1.00	1.00	1.00	1.00
AdjDel/Veh:	22.6	21.7	24.7	24.1	21.8	21.8	47.2	25.1	25.1	27.1	8.9	8.9
LOS by Move:	C	C	C	C	C	C	D	C	C	C	A	A
HCM2kAvgQ:	2	1	5	2	1	1	1	5	5	5	3	3

Note: Queue reported is the number of cars per lane.

City of Murrieta General Plan
Existing
AM Peak Hour

Level Of Service Computation Report
2000 HCM Operations Method (Base Volume Alternative)

Intersection #61 I-215 SB Ramps & Scott Rd

Cycle (sec): 100 Critical Vol./Cap.(X): 0.684
Loss Time (sec): 0 (Y+R=4.0 sec) Average Delay (sec/veh): 23.2
Optimal Cycle: 72 Level Of Service: C

Street Name:	I-215 SB Ramps						Scott Rd					
Approach:	North Bound			South Bound			East Bound			West Bound		
Movement:	L - T - R			L - T - R			L - T - R			L - T - R		
Control:	Protected			Protected			Protected			Protected		
Rights:	Include			Include			Include			Include		
Min. Green:	0	0	0	0	0	0	0	0	0	0	0	0
Lanes:	0 0	0	0 0	0 1	0	0 1	0 0	1	0 1	1 0	1	0 0
Volume Module:												
Base Vol:	0	0	0	258	4	88	0	535	320	447	501	0
Growth Adj:	1.00	1.00	1.00	1.00	1.00	1.00	1.00	1.00	1.00	1.00	1.00	1.00
Initial Bse:	0	0	0	258	4	88	0	535	320	447	501	0
User Adj:	1.00	1.00	1.00	1.00	1.00	1.00	1.00	1.00	1.00	1.00	1.00	1.00
PHF Adj:	1.00	1.00	1.00	1.00	1.00	1.00	1.00	1.00	1.00	1.00	1.00	1.00
PHF Volume:	0	0	0	258	4	88	0	535	320	447	501	0
Reduct Vol:	0	0	0	0	0	0	0	0	0	0	0	0
Reduced Vol:	0	0	0	258	4	88	0	535	320	447	501	0
PCE Adj:	1.00	1.00	1.00	1.00	1.00	1.00	1.00	1.00	1.00	1.00	1.00	1.00
MLF Adj:	1.00	1.00	1.00	1.00	1.00	1.00	1.00	1.00	1.00	1.00	1.00	1.00
FinalVolume:	0	0	0	258	4	88	0	535	320	447	501	0
Saturation Flow Module:												
Sat/Lane:	1900	1900	1900	1900	1900	1900	1900	1900	1900	1900	1900	1900
Adjustment:	1.00	1.00	1.00	0.89	0.89	0.85	1.00	1.00	0.85	0.95	1.00	1.00
Lanes:	0.00	0.00	0.00	0.98	0.02	1.00	0.00	1.00	1.00	1.00	1.00	0.00
Final Sat.:	0	0	0	1663	26	1615	0	1900	1615	1805	1900	0
Capacity Analysis Module:												
Vol/Sat:	0.00	0.00	0.00	0.16	0.16	0.05	0.00	0.28	0.20	0.25	0.26	0.00
Crit Moves:				****				****		****		
Green/Cycle:	0.00	0.00	0.00	0.23	0.23	0.23	0.00	0.41	0.41	0.36	0.77	0.00
Volume/Cap:	0.00	0.00	0.00	0.68	0.68	0.24	0.00	0.68	0.48	0.68	0.34	0.00
Delay/Veh:	0.0	0.0	0.0	40.5	40.5	32.0	0.0	26.6	22.2	30.1	3.6	0.0
User DelAdj:	1.00	1.00	1.00	1.00	1.00	1.00	1.00	1.00	1.00	1.00	1.00	1.00
AdjDel/Veh:	0.0	0.0	0.0	40.5	40.5	32.0	0.0	26.6	22.2	30.1	3.6	0.0
LOS by Move:	A	A	A	D	D	C	A	C	C	C	A	A
HCM2kAvgQ:	0	0	0	9	9	2	0	14	7	13	5	0

Note: Queue reported is the number of cars per lane.

City of Murrieta General Plan
Existing
AM Peak Hour

Level Of Service Computation Report
2000 HCM Operations Method (Base Volume Alternative)

Intersection #62 I-215 NB Ramps & Scott Rd

Cycle (sec):	100	Critical Vol./Cap.(X):	0.693
Loss Time (sec):	0 (Y+R=4.0 sec)	Average Delay (sec/veh):	18.0
Optimal Cycle:	74	Level Of Service:	B

Street Name:	I-215 NB Ramps								Scott Rd					
Approach:	North Bound			South Bound			East Bound			West Bound				
Movement:	L	- T	- R	L	- T	- R	L	- T	- R	L	- T	- R		
Control:	Protected			Protected			Protected			Protected				
Rights:	Include			Include			Include			Include				
Min. Green:	0	0	0	0	0	0	0	0	0	0	0	0		
Lanes:	0	1 0	0 1	0	0 0	0 0	1	0 1	0 0	0	0 1	0 1		
Volume Module:														
Base Vol:	145	12	349	0	0	0	108	603	0	0	792	380		
Growth Adj:	1.00	1.00	1.00	1.00	1.00	1.00	1.00	1.00	1.00	1.00	1.00	1.00		
Initial Bse:	145	12	349	0	0	0	108	603	0	0	792	380		
User Adj:	1.00	1.00	1.00	1.00	1.00	1.00	1.00	1.00	1.00	1.00	1.00	1.00		
PHF Adj:	1.00	1.00	1.00	1.00	1.00	1.00	1.00	1.00	1.00	1.00	1.00	1.00		
PHF Volume:	145	12	349	0	0	0	108	603	0	0	792	380		
Reduct Vol:	0	0	0	0	0	0	0	0	0	0	0	0		
Reduced Vol:	145	12	349	0	0	0	108	603	0	0	792	380		
PCE Adj:	1.00	1.00	1.00	1.00	1.00	1.00	1.00	1.00	1.00	1.00	1.00	1.00		
MLF Adj:	1.00	1.00	1.00	1.00	1.00	1.00	1.00	1.00	1.00	1.00	1.00	1.00		
FinalVolume:	145	12	349	0	0	0	108	603	0	0	792	380		
Saturation Flow Module:														
Sat/Lane:	1900	1900	1900	1900	1900	1900	1900	1900	1900	1900	1900	1900		
Adjustment:	0.96	0.96	0.85	1.00	1.00	1.00	0.95	1.00	1.00	1.00	1.00	0.85		
Lanes:	0.92	0.08	1.00	0.00	0.00	0.00	1.00	1.00	0.00	0.00	1.00	1.00		
Final Sat.:	1679	139	1615	0	0	0	1805	1900	0	0	1900	1615		
Capacity Analysis Module:														
Vol/Sat:	0.09	0.09	0.22	0.00	0.00	0.00	0.06	0.32	0.00	0.00	0.42	0.24		
Crit Moves:			****				****				****			
Green/Cycle:	0.31	0.31	0.31	0.00	0.00	0.00	0.09	0.69	0.00	0.00	0.60	0.60		
Volume/Cap:	0.28	0.28	0.69	0.00	0.00	0.00	0.69	0.46	0.00	0.00	0.69	0.39		
Delay/Veh:	26.2	26.2	34.3	0.0	0.0	0.0	57.0	7.4	0.0	0.0	15.5	10.6		
User DelAdj:	1.00	1.00	1.00	1.00	1.00	1.00	1.00	1.00	1.00	1.00	1.00	1.00		
AdjDel/Veh:	26.2	26.2	34.3	0.0	0.0	0.0	57.0	7.4	0.0	0.0	15.5	10.6		
LOS by Move:	C	C	C	A	A	A	E	A	A	A	B	B		
HCM2kAvgQ:	4	4	11	0	0	0	5	9	0	0	17	6		

Note: Queue reported is the number of cars per lane.

Traffix 7.9.0215 (c) 2008 Dowling Assoc. Licensed to MMA, LONG BEACH, CA

City of Murrieta General Plan
Existing
PM Peak Hour

Scenario Report

Scenario:	Existing PM
Command:	Existing PM
Volume:	Existing PM
Geometry:	Existing
Impact Fee:	Default Impact Fee
Trip Generation:	Default Trip Generation
Trip Distribution:	Default Trip Distribution
Paths:	Default Path
Routes:	Default Route
Configuration:	Existing PM

City of Murrieta General Plan
Existing
PM Peak Hour

Turning Movement Report

Volume	Northbound			Southbound			Eastbound			Westbound			Total
Type	Left	Thru	Right	Left	Thru	Right	Left	Thru	Right	Left	Thru	Right	Volume
#1 Menifee Road & Scott Road													
Base	97	48	65	48	43	107	145	545	159	48	459	102	1866
Added	0	0	0	0	0	0	0	0	0	0	0	0	0
Total	97	48	65	48	43	107	145	545	159	48	459	102	1866
#2 Leon Road & Scott Road													
Base	277	12	15	2	10	7	7	181	261	6	204	5	987
Added	0	0	0	0	0	0	0	0	0	0	0	0	0
Total	277	12	15	2	10	7	7	181	261	6	204	5	987
#3 Winchester Road/SR-79 & Scott Road													
Base	75	891	3	123	553	80	81	60	67	0	59	171	2163
Added	0	0	0	0	0	0	0	0	0	0	0	0	0
Total	75	891	3	123	553	80	81	60	67	0	59	171	2163
#4 Antelope Road & Keller Road													
Base	14	315	271	19	93	7	10	5	7	72	2	19	834
Added	0	0	0	0	0	0	0	0	0	0	0	0	0
Total	14	315	271	19	93	7	10	5	7	72	2	19	834
#5 Menifee Road - Meadowlark Road & Keller Road													
Base	0	0	0	12	0	48	119	32	0	0	20	10	241
Added	0	0	0	0	0	0	0	0	0	0	0	0	0
Total	0	0	0	12	0	48	119	32	0	0	20	10	241
#6 Briggs Road & Keller Road													
Base	0	0	0	0	0	0	0	0	0	0	0	0	0
Added	0	0	0	0	0	0	0	0	0	0	0	0	0
Total	0	0	0	0	0	0	0	0	0	0	0	0	0
#7 Leon Road & Keller Road													
Base	1	258	4	7	240	0	0	0	1	5	0	3	519
Added	0	0	0	0	0	0	0	0	0	0	0	0	0
Total	1	258	4	7	240	0	0	0	1	5	0	3	519
#8 Winchester Road - SR-79 & Keller Road													
Base	1	913	3	0	624	2	0	0	1	1	0	3	1548
Added	0	0	0	0	0	0	0	0	0	0	0	0	0
Total	1	913	3	0	624	2	0	0	1	1	0	3	1548
#9 Antelope Road & Golden City Drive - Baxter Road													
Base	0	0	0	0	0	0	0	0	0	0	0	0	0
Added	0	0	0	0	0	0	0	0	0	0	0	0	0
Total	0	0	0	0	0	0	0	0	0	0	0	0	0

City of Murrieta General Plan
Existing
PM Peak Hour

Volume Type	Northbound Left	Thru	Right	Southbound Left	Thru	Right	Eastbound Left	Thru	Right	Westbound Left	Thru	Right	Total Volume
#10 Whitewood Roa - /Meadowlark Road & Golden City Drive - Baxter Road													
Base	0	0	0	0	0	0	0	0	0	0	0	0	0
Added	0	0	0	0	0	0	0	0	0	0	0	0	0
Total	0	0	0	0	0	0	0	0	0	0	0	0	0
#11 Briggs Road & Baxter Road - Jean Nicholas													
Base	0	0	0	0	0	0	0	0	0	0	0	0	0
Added	0	0	0	0	0	0	0	0	0	0	0	0	0
Total	0	0	0	0	0	0	0	0	0	0	0	0	0
#12 Leon Road & Jean Nicholas													
Base	0	229	19	24	224	0	0	0	0	8	0	34	538
Added	0	0	0	0	0	0	0	0	0	0	0	0	0
Total	0	229	19	24	224	0	0	0	0	8	0	34	538
#13 Winchester Road - SR-79 & Nicholas - Skyview													
Base	78	1120	2	2	632	18	25	0	22	1	0	3	1903
Added	0	0	0	0	0	0	0	0	0	0	0	0	0
Total	78	1120	2	2	632	18	25	0	22	1	0	3	1903
#14 Antelope Road & Linnel Lane Extension													
Base	0	0	0	0	0	0	0	0	0	0	0	0	0
Added	0	0	0	0	0	0	0	0	0	0	0	0	0
Total	0	0	0	0	0	0	0	0	0	0	0	0	0
#15 Whitewood Road - Meadowlark Road & Linnel Lane Extension													
Base	0	0	0	0	0	0	0	0	0	0	0	0	0
Added	0	0	0	0	0	0	0	0	0	0	0	0	0
Total	0	0	0	0	0	0	0	0	0	0	0	0	0
#16 Leon Road & Max Gillis Road													
Base	84	62	168	197	22	39	18	70	25	98	216	212	1211
Added	0	0	0	0	0	0	0	0	0	0	0	0	0
Total	84	62	168	197	22	39	18	70	25	98	216	212	1211
#17 Winchester Road - SR-79 & Max Gillis - Thompson													
Base	409	1197	251	25	636	32	44	115	294	132	103	10	3248
Added	0	0	0	0	0	0	0	0	0	0	0	0	0
Total	409	1197	251	25	636	32	44	115	294	132	103	10	3248
#18 California Oaks Road & Clinton Keith Road													
Base	162	0	554	0	0	0	0	602	89	312	608	0	2327
Added	0	0	0	0	0	0	0	0	0	0	0	0	0
Total	162	0	554	0	0	0	0	602	89	312	608	0	2327

City of Murrieta General Plan
Existing
PM Peak Hour

Volume Type	Northbound Left	Thru	Right	Southbound Left	Thru	Right	Eastbound Left	Thru	Right	Westbound Left	Thru	Right	Total Volume
#19 I-215 SB Off-Ramp & Clinton Keith Road													
Base	0	0	0	46	2	629	0	710	403	77	405	0	2272
Added	0	0	0	0	0	0	0	0	0	0	0	0	0
Total	0	0	0	46	2	629	0	710	403	77	405	0	2272
#20 I-215 NB Off Ramp & Clinton Keith Road													
Base	241	1	88	0	0	0	455	274	0	0	261	81	1401
Added	0	0	0	0	0	0	0	0	0	0	0	0	0
Total	241	1	88	0	0	0	455	274	0	0	261	81	1401
#21 Antelope Road & Clinton Keith Road													
Base	0	0	0	0	0	0	0	0	0	0	0	0	0
Added	0	0	0	0	0	0	0	0	0	0	0	0	0
Total	0	0	0	0	0	0	0	0	0	0	0	0	0
#22 Meadowlark Lane - Whitewood Road & Clinton Keith Road													
Base	248	380	3	0	78	62	161	3	152	0	1	0	1088
Added	0	0	0	0	0	0	0	0	0	0	0	0	0
Total	248	380	3	0	78	62	161	3	152	0	1	0	1088
#23 Liberty Road & Clinton Keith Road													
Base	0	0	0	0	0	0	0	0	0	0	0	0	0
Added	0	0	0	0	0	0	0	0	0	0	0	0	0
Total	0	0	0	0	0	0	0	0	0	0	0	0	0
#24 Leon Road & Clinton Keith Road													
Base	0	0	0	0	0	0	0	0	0	0	0	0	0
Added	0	0	0	0	0	0	0	0	0	0	0	0	0
Total	0	0	0	0	0	0	0	0	0	0	0	0	0
#25 Winchester Road - SR-79 & Benton Road													
Base	0	1497	526	255	865	0	0	0	0	280	0	357	3780
Added	0	0	0	0	0	0	0	0	0	0	0	0	0
Total	0	1497	526	255	865	0	0	0	0	280	0	357	3780
#26 Winchester Road - SR-79 & Via Mira Mosa													
Base	24	1893	204	42	1069	55	58	11	27	304	16	86	3789
Added	0	0	0	0	0	0	0	0	0	0	0	0	0
Total	24	1893	204	42	1069	55	58	11	27	304	16	86	3789
#27 Monroe Ave & Los Alamos													
Base	0	0	0	179	0	83	167	946	0	0	447	134	1956
Added	0	0	0	0	0	0	0	0	0	0	0	0	0
Total	0	0	0	179	0	83	167	946	0	0	447	134	1956

City of Murrieta General Plan
Existing
PM Peak Hour

Volume Type	Northbound Left	Thru	Right	Southbound Left	Thru	Right	Eastbound Left	Thru	Right	Westbound Left	Thru	Right	Total Volume
#28 Jefferson Avenue & Murrieta Hot Springs Road													
Base	0	965	976	275	329	0	0	0	0	289	0	246	3080
Added	0	0	0	0	0	0	0	0	0	0	0	0	0
Total	0	965	976	275	329	0	0	0	0	289	0	246	3080
#29 Madison Avenue & Murrieta Hot Springs Road													
Base	63	286	562	459	212	67	206	868	103	419	424	162	3831
Added	0	0	0	0	0	0	0	0	0	0	0	0	0
Total	63	286	562	459	212	67	206	868	103	419	424	162	3831
#30 I-15 SB Off-Ramp & Murrieta Hot Springs Road													
Base	0	0	0	842	0	276	0	1599	366	0	1078	112	4273
Added	0	0	0	0	0	0	0	0	0	0	0	0	0
Total	0	0	0	842	0	276	0	1599	366	0	1078	112	4273
#31 I-15 NB Off-Ramp & Murrieta Hot Springs Road													
Base	275	0	180	0	0	0	485	1942	0	0	852	985	4719
Added	0	0	0	0	0	0	0	0	0	0	0	0	0
Total	275	0	180	0	0	0	485	1942	0	0	852	985	4719
#32 I-215 SB Off-Ramp & Murrieta Hot Springs Road													
Base	0	0	0	603	0	236	0	2103	139	0	1535	238	4854
Added	0	0	0	0	0	0	0	0	0	0	0	0	0
Total	0	0	0	603	0	236	0	2103	139	0	1535	238	4854
#33 I-215 NB Off-Ramp & Murrieta Hot Springs Road													
Base	77	0	496	0	0	0	0	2300	104	0	1748	571	5296
Added	0	0	0	0	0	0	0	0	0	0	0	0	0
Total	77	0	496	0	0	0	0	2300	104	0	1748	571	5296
#34 Jackson Avenue & Murrieta Hot Springs Road													
Base	90	0	111	0	0	0	0	1968	43	136	1577	0	3925
Added	0	0	0	0	0	0	0	0	0	0	0	0	0
Total	90	0	111	0	0	0	0	1968	43	136	1577	0	3925
#35 Margarita Road & Murrieta Hot Springs Road													
Base	879	20	225	20	15	26	18	1241	687	186	973	7	4297
Added	0	0	0	0	0	0	0	0	0	0	0	0	0
Total	879	20	225	20	15	26	18	1241	687	186	973	7	4297
#36 French Valley Parkway & Murrieta Hot Springs Road													
Base	0	0	0	0	0	0	0	0	0	0	0	0	0
Added	0	0	0	0	0	0	0	0	0	0	0	0	0
Total	0	0	0	0	0	0	0	0	0	0	0	0	0

City of Murrieta General Plan
Existing
PM Peak Hour

Volume Type	Northbound Left	Thru	Right	Southbound Left	Thru	Right	Eastbound Left	Thru	Right	Westbound Left	Thru	Right	Total Volume
#37 Jefferson Avenue & Guava Street													
Base	0	1995	75	16	560	0	0	0	0	9	0	19	2674
Added	0	0	0	0	0	0	0	0	0	0	0	0	0
Total	0	1995	75	16	560	0	0	0	0	9	0	19	2674
#38 Jefferson Avenue & Cherry Street													
Base	55	1372	0	0	880	9	4	0	76	0	0	0	2396
Added	0	0	0	0	0	0	0	0	0	0	0	0	0
Total	55	1372	0	0	880	9	4	0	76	0	0	0	2396
#39 Washington Ave & Calle Del Oso Oro/Nutmeg													
Base	327	319	113	64	278	35	20	121	275	124	258	89	2023
Added	0	0	0	0	0	0	0	0	0	0	0	0	0
Total	327	319	113	64	278	35	20	121	275	124	258	89	2023
#40 Clinton Keith Rd & Calle de Oso Oro/Bear Creek Dr													
Base	1	255	35	83	233	105	67	22	3	75	37	53	969
Added	0	0	0	0	0	0	0	0	0	0	0	0	0
Total	1	255	35	83	233	105	67	22	3	75	37	53	969
#41 Jefferson Ave & Nutmeg St													
Base	221	84	195	14	44	9	11	179	94	125	227	29	1232
Added	0	0	0	0	0	0	0	0	0	0	0	0	0
Total	221	84	195	14	44	9	11	179	94	125	227	29	1232
#42 Jefferson Ave & Magnolia St													
Base	96	480	9	4	264	38	67	7	33	5	7	7	1017
Added	0	0	0	0	0	0	0	0	0	0	0	0	0
Total	96	480	9	4	264	38	67	7	33	5	7	7	1017
#43 Jefferson Ave & Lemon St													
Base	78	616	1	2	324	6	7	0	37	4	4	4	1083
Added	0	0	0	0	0	0	0	0	0	0	0	0	0
Total	78	616	1	2	324	6	7	0	37	4	4	4	1083
#44 Jefferson Ave & Kalmia St													
Base	191	326	233	168	186	11	20	515	198	128	458	298	2732
Added	0	0	0	0	0	0	0	0	0	0	0	0	0
Total	191	326	233	168	186	11	20	515	198	128	458	298	2732
#45 Jefferson Ave & Juniper St													
Base	61	738	74	47	392	28	48	53	55	10	47	45	1598
Added	0	0	0	0	0	0	0	0	0	0	0	0	0
Total	61	738	74	47	392	28	48	53	55	10	47	45	1598

City of Murrieta General Plan
Existing
PM Peak Hour

Volume Type	Northbound Left	Thru	Right	Southbound Left	Thru	Right	Eastbound Left	Thru	Right	Westbound Left	Thru	Right	Total Volume
#46 Jefferson Ave & Ivy St/Los Alamos Rd													
Base	180	627	402	148	297	36	44	245	129	98	161	132	2499
Added	0	0	0	0	0	0	0	0	0	0	0	0	0
Total	180	627	402	148	297	36	44	245	129	98	161	132	2499
#47 Madison Ave & Kalmia St													
Base	190	0	537	0	0	0	0	1020	172	383	952	0	3254
Added	0	0	0	0	0	0	0	0	0	0	0	0	0
Total	190	0	537	0	0	0	0	1020	172	383	952	0	3254
#48 Madison Ave/I-15 SB Ramps & Kalmia St													
Base	0	0	0	359	2	361	0	1109	408	385	987	0	3611
Added	0	0	0	0	0	0	0	0	0	0	0	0	0
Total	0	0	0	359	2	361	0	1109	408	385	987	0	3611
#49 Monroe Ave & Murrieta Hot Springs Rd													
Base	0	0	0	0	0	130	227	2111	0	0	1574	30	4072
Added	0	0	0	0	0	0	0	0	0	0	0	0	0
Total	0	0	0	0	0	130	227	2111	0	0	1574	30	4072
#50 Hancock Ave & Murrieta Hot Springs Rd													
Base	0	0	0	569	0	183	237	1924	0	0	1465	421	4799
Added	0	0	0	0	0	0	0	0	0	0	0	0	0
Total	0	0	0	569	0	183	237	1924	0	0	1465	421	4799
#51 Alta Murrieta Dr & Murrieta Hot Springs Rd													
Base	394	195	45	208	132	412	717	1697	499	119	1293	112	5823
Added	0	0	0	0	0	0	0	0	0	0	0	0	0
Total	394	195	45	208	132	412	717	1697	499	119	1293	112	5823
#52 Winchester Road - SR-79 & Murrieta Hot Springs Rd													
Base	250	1689	204	122	1064	498	611	522	207	273	412	62	5914
Added	0	0	0	0	0	0	0	0	0	0	0	0	0
Total	250	1689	204	122	1064	498	611	522	207	273	412	62	5914
#53 Hancock Ave & Los Alamos Rd													
Base	149	559	290	459	222	65	198	965	62	163	537	295	3964
Added	0	0	0	0	0	0	0	0	0	0	0	0	0
Total	149	559	290	459	222	65	198	965	62	163	537	295	3964
#54 I-215 SB Ramps & Los Alamos Rd													
Base	0	0	0	192	3	408	0	1441	287	160	738	0	3229
Added	0	0	0	0	0	0	0	0	0	0	0	0	0
Total	0	0	0	192	3	408	0	1441	287	160	738	0	3229

City of Murrieta General Plan
Existing
PM Peak Hour

Volume Type	Northbound Left	Thru	Right	Southbound Left	Thru	Right	Eastbound Left	Thru	Right	Westbound Left	Thru	Right	Total Volume
#55 I-215 NB Ramps & Los Alamos Rd													
Base	129	4	175	0	0	0	394	1181	0	0	774	165	2822
Added	0	0	0	0	0	0	0	0	0	0	0	0	0
Total	129	4	175	0	0	0	394	1181	0	0	774	165	2822
#56 Whitewood Rd & Los Alamos Rd													
Base	197	343	64	13	196	162	269	353	265	70	207	18	2157
Added	0	0	0	0	0	0	0	0	0	0	0	0	0
Total	197	343	64	13	196	162	269	353	265	70	207	18	2157
#57 Whitewood Rd & Murrieta Hot Springs Rd													
Base	6	5	16	316	7	93	101	1903	6	21	1776	417	4667
Added	0	0	0	0	0	0	0	0	0	0	0	0	0
Total	6	5	16	316	7	93	101	1903	6	21	1776	417	4667
#58 Adams Ave & Guava St													
Base	0	86	26	77	22	0	0	0	0	7	0	90	308
Added	0	0	0	0	0	0	0	0	0	0	0	0	0
Total	0	86	26	77	22	0	0	0	0	7	0	90	308
#59 Nutmeg St & Clinton Keith Rd													
Base	48	61	192	61	23	21	52	533	69	210	397	73	1740
Added	0	0	0	0	0	0	0	0	0	0	0	0	0
Total	48	61	192	61	23	21	52	533	69	210	397	73	1740
#60 Mitchell Rd & Clinton Keith Rd													
Base	32	0	67	0	0	0	0	1100	37	93	946	0	2275
Added	0	0	0	0	0	0	0	0	0	0	0	0	0
Total	32	0	67	0	0	0	0	1100	37	93	946	0	2275
#61 I-215 SB Ramps & Scott Rd													
Base	0	0	0	334	4	114	0	580	165	465	603	0	2265
Added	0	0	0	0	0	0	0	0	0	0	0	0	0
Total	0	0	0	334	4	114	0	580	165	465	603	0	2265
#62 I-215 NB Ramps & Scott Rd													
Base	182	6	468	0	0	0	112	780	0	0	913	364	2825
Added	0	0	0	0	0	0	0	0	0	0	0	0	0
Total	182	6	468	0	0	0	112	780	0	0	913	364	2825
#104 Antelope Road & Keller Road													
Base	0	0	0	0	0	0	0	0	0	0	0	0	0
Added	0	0	0	0	0	0	0	0	0	0	0	0	0
Total	0	0	0	0	0	0	0	0	0	0	0	0	0

City of Murrieta General Plan
Existing
PM Peak Hour

Volume Type	Northbound Left	Thru	Right	Southbound Left	Thru	Right	Eastbound Left	Thru	Right	Westbound Left	Thru	Right	Total Volume
#105 Menifee Road - Meadowlark Road & Keller Road													
Base	0	0	0	0	0	0	0	0	0	0	0	0	0
Added	0	0	0	0	0	0	0	0	0	0	0	0	0
Total	0	0	0	0	0	0	0	0	0	0	0	0	0
#122 Meadowlark Lane - Whitewood Road & Clinton Keith Road													
Base	0	0	0	0	0	0	0	0	0	0	0	0	0
Added	0	0	0	0	0	0	0	0	0	0	0	0	0
Total	0	0	0	0	0	0	0	0	0	0	0	0	0
#138 Jefferson Avenue & Cherry Street													
Base	0	0	0	0	0	0	0	0	0	0	0	0	0
Added	0	0	0	0	0	0	0	0	0	0	0	0	0
Total	0	0	0	0	0	0	0	0	0	0	0	0	0
#141 Jefferson Ave & Nutmeg St													
Base	0	0	0	0	0	0	0	0	0	0	0	0	0
Added	0	0	0	0	0	0	0	0	0	0	0	0	0
Total	0	0	0	0	0	0	0	0	0	0	0	0	0
#142 Jefferson Ave & Magnolia St													
Base	0	0	0	0	0	0	0	0	0	0	0	0	0
Added	0	0	0	0	0	0	0	0	0	0	0	0	0
Total	0	0	0	0	0	0	0	0	0	0	0	0	0
#149 Monroe Ave & Murrieta Hot Springs Rd													
Base	0	0	0	0	0	0	0	0	0	0	0	0	0
Added	0	0	0	0	0	0	0	0	0	0	0	0	0
Total	0	0	0	0	0	0	0	0	0	0	0	0	0
#158 Adams Ave & Guava St													
Base	0	0	0	0	0	0	0	0	0	0	0	0	0
Added	0	0	0	0	0	0	0	0	0	0	0	0	0
Total	0	0	0	0	0	0	0	0	0	0	0	0	0

City of Murrieta General Plan
Existing
PM Peak Hour

Impact Analysis Report
Level Of Service

Intersection	Base LOS	Base Del/ Veh	Base V/ C	Future LOS	Future Del/ Veh	Future V/ C	Change in
# 1 Menifee Road & Scott Road	B	18.0	0.340	B	18.0	0.340	+ 0.000 D/V
# 2 Leon Road & Scott Road	B	13.4	0.617	B	13.4	0.617	+ 0.000 V/C
# 3 Winchester Road/SR-79 & Scott	B	18.5	0.450	B	18.5	0.450	+ 0.000 D/V
# 4 Antelope Road & Keller Road	B	13.5	0.688	B	13.5	0.688	+ 0.000 V/C
# 5 Menifee Road - Meadowlark Road	A	8.2	0.172	A	8.2	0.172	+ 0.000 V/C
# 7 Leon Road & Keller Road	B	11.6	0.000	B	11.6	0.000	+ 0.000 D/V
# 8 Winchester Road - SR-79 & Kell	C	23.0	0.000	C	23.0	0.000	+ 0.000 D/V
# 12 Leon Road & Jean Nicholas	B	10.2	0.000	B	10.2	0.000	+ 0.000 D/V
# 13 Winchester Road - SR-79 & Nich	A	5.1	0.325	A	5.1	0.325	+ 0.000 D/V
# 16 Leon Road & Max Gillis Road	C	25.4	0.293	C	25.4	0.293	+ 0.000 D/V
# 17 Winchester Road - SR-79 & Max	C	25.6	0.681	C	25.6	0.681	+ 0.000 D/V
# 18 California Oaks Road & Clinton	C	22.4	0.580	C	22.4	0.580	+ 0.000 D/V
# 19 I-215 SB Off-Ramp & Clinton Ke	C	26.1	0.807	C	26.1	0.807	+ 0.000 D/V
# 20 I-215 NB Off Ramp & Clinton Ke	C	23.1	0.565	C	23.1	0.565	+ 0.000 D/V
# 22 Meadowlark Lane - Whitewood Ro	B	13.4	0.608	B	13.4	0.608	+ 0.000 V/C
# 25 Winchester Road - SR-79 & Bent	C	21.2	0.777	C	21.2	0.777	+ 0.000 D/V
# 26 Winchester Road - SR-79 & Via	B	14.4	0.738	B	14.4	0.738	+ 0.000 D/V
# 27 Monroe Ave & Los Alamos	B	12.4	0.313	B	12.4	0.313	+ 0.000 D/V
# 28 Jefferson Avenue & Murrieta Ho	C	20.7	0.835	C	20.7	0.835	+ 0.000 D/V
# 29 Madison Avenue & Murrieta Hot	C	34.2	0.741	C	34.2	0.741	+ 0.000 D/V
# 30 I-15 SB Off-Ramp & Murrieta Ho	B	18.9	0.657	B	18.9	0.657	+ 0.000 D/V
# 31 I-15 NB Off-Ramp & Murrieta Ho	B	15.3	0.544	B	15.3	0.544	+ 0.000 D/V
# 32 I-215 SB Off-Ramp & Murrieta H	B	14.5	0.659	B	14.5	0.659	+ 0.000 D/V

City of Murrieta General Plan
Existing
PM Peak Hour

Intersection	Base LOS	Base Del/ Veh	Base V/ C	Future LOS	Future Del/ Veh	Future V/ C	Change in
# 33 I-215 NB Off-Ramp & Murrieta H	A	10.0	0.618	A	10.0	0.618	+ 0.000 D/V
# 34 Jackson Avenue & Murrieta Hot	A	6.2	0.494	A	6.2	0.494	+ 0.000 D/V
# 35 Margarita Road & Murrieta Hot	C	23.7	0.798	C	23.7	0.798	+ 0.000 D/V
# 37 Jefferson Avenue & Guava Stree	A	1.4	0.573	A	1.4	0.573	+ 0.000 D/V
# 38 Jefferson Avenue & Cherry Stre	C	15.0	0.000	C	15.0	0.000	+ 0.000 D/V
# 39 Washington Ave & Calle Del Oso	C	26.8	0.508	C	26.8	0.508	+ 0.000 D/V
# 40 Clinton Keith Rd & Calle de Os	B	16.2	0.183	B	16.2	0.183	+ 0.000 D/V
# 41 Jefferson Ave & Nutmeg St	B	12.9	0.480	B	12.9	0.480	+ 0.000 V/C
# 42 Jefferson Ave & Magnolia St	C	21.2	0.841	C	21.2	0.841	+ 0.000 V/C
# 43 Jefferson Ave & Lemon St	A	6.6	0.353	A	6.6	0.353	+ 0.000 D/V
# 44 Jefferson Ave & Kalmia St	C	26.7	0.517	C	26.7	0.517	+ 0.000 D/V
# 45 Jefferson Ave & Juniper St	B	13.8	0.285	B	13.8	0.285	+ 0.000 D/V
# 46 Jefferson Ave & Ivy St/Los Ala	C	25.2	0.494	C	25.2	0.494	+ 0.000 D/V
# 47 Madison Ave & Kalmia St	C	20.3	0.491	C	20.3	0.491	+ 0.000 D/V
# 48 Madison Ave/I-15 SB Ramps & Ka	C	21.0	0.639	C	21.0	0.639	+ 0.000 D/V
# 49 Monroe Ave & Murrieta Hot Spri	C	23.8	0.000	C	23.8	0.000	+ 0.000 D/V
# 50 Hancock Ave & Murrieta Hot Spr	B	14.7	0.513	B	14.7	0.513	+ 0.000 D/V
# 51 Alta Murrieta Dr & Murrieta Ho	C	28.1	0.746	C	28.1	0.746	+ 0.000 D/V
# 52 Winchester Road - SR-79 & Murr	C	26.4	0.668	C	26.4	0.668	+ 0.000 D/V
# 53 Hancock Ave & Los Alamos Rd	C	34.5	0.756	C	34.5	0.756	+ 0.000 D/V
# 54 I-215 SB Ramps & Los Alamos Rd	B	15.6	0.574	B	15.6	0.574	+ 0.000 D/V
# 55 I-215 NB Ramps & Los Alamos Rd	B	15.0	0.437	B	15.0	0.437	+ 0.000 D/V
# 56 Whitewood Rd & Los Alamos Rd	C	26.0	0.422	C	26.0	0.422	+ 0.000 D/V
# 57 Whitewood Rd & Murrieta Hot Sp	A	9.7	0.594	A	9.7	0.594	+ 0.000 D/V
# 58 Adams Ave & Guava St	A	9.3	0.000	A	9.3	0.000	+ 0.000 D/V

City of Murrieta General Plan
Existing
PM Peak Hour

Intersection	Base LOS	Base Del/ Veh	Base V/ C	Future LOS	Future Del/ Veh	Future V/ C	Change in
# 59 Nutmeg St & Clinton Keith Rd	C	21.0	0.406	C	21.0	0.406	+ 0.000 D/V
# 61 I-215 SB Ramps & Scott Rd	C	25.6	0.763	C	25.6	0.763	+ 0.000 D/V
# 62 I-215 NB Ramps & Scott Rd	C	23.4	0.832	C	23.4	0.832	+ 0.000 D/V

City of Murrieta General Plan
Existing
PM Peak Hour

Level Of Service Computation Report
2000 HCM Operations Method (Base Volume Alternative)

Intersection #1 Menifee Road & Scott Road

Cycle (sec): 100 Critical Vol./Cap.(X): 0.340
Loss Time (sec): 0 (Y+R=4.0 sec) Average Delay (sec/veh): 18.0
Optimal Cycle: 28 Level Of Service: B

Street Name:	Menifee Rd						Scott Rd					
Approach:	North Bound			South Bound			East Bound			West Bound		
Movement:	L -	T -	R	L -	T -	R	L -	T -	R	L -	T -	R
Control:	Permitted			Permitted			Protected			Protected		
Rights:	Include			Include			Include			Include		
Min. Green:	0	0	0	0	0	0	0	0	0	0	0	0
Lanes:	1 0	1 0	1	1 0	0 1	0	1 0	1 1	0	1 0	1 1	0
Volume Module:												
Base Vol:	97	48	65	48	43	107	145	545	159	48	459	102
Growth Adj:	1.00	1.00	1.00	1.00	1.00	1.00	1.00	1.00	1.00	1.00	1.00	1.00
Initial Bse:	97	48	65	48	43	107	145	545	159	48	459	102
User Adj:	1.00	1.00	1.00	1.00	1.00	1.00	1.00	1.00	1.00	1.00	1.00	1.00
PHF Adj:	1.00	1.00	1.00	1.00	1.00	1.00	1.00	1.00	1.00	1.00	1.00	1.00
PHF Volume:	97	48	65	48	43	107	145	545	159	48	459	102
Reduct Vol:	0	0	0	0	0	0	0	0	0	0	0	0
Reduced Vol:	97	48	65	48	43	107	145	545	159	48	459	102
PCE Adj:	1.00	1.00	1.00	1.00	1.00	1.00	1.00	1.00	1.00	1.00	1.00	1.00
MLF Adj:	1.00	1.00	1.00	1.00	1.00	1.00	1.00	1.00	1.00	1.00	1.00	1.00
FinalVolume:	97	48	65	48	43	107	145	545	159	48	459	102
Saturation Flow Module:												
Sat/Lane:	1900	1900	1900	1900	1900	1900	1900	1900	1900	1900	1900	1900
Adjustment:	0.51	1.00	0.85	0.68	0.89	0.89	0.95	0.92	0.92	0.95	0.92	0.92
Lanes:	1.00	1.00	1.00	1.00	0.29	0.71	1.00	1.55	0.45	1.00	1.64	0.36
Final Sat.:	973	1900	1615	1294	486	1210	1805	2700	788	1805	2874	639
Capacity Analysis Module:												
Vol/Sat:	0.10	0.03	0.04	0.04	0.09	0.09	0.08	0.20	0.20	0.03	0.16	0.16
Crit Moves:	****						****				****	
Green/Cycle:	0.29	0.29	0.29	0.29	0.29	0.29	0.24	0.62	0.62	0.08	0.47	0.47
Volume/Cap:	0.34	0.09	0.14	0.13	0.30	0.30	0.34	0.32	0.32	0.32	0.34	0.34
Delay/Veh:	28.4	25.7	26.1	26.1	27.7	27.7	32.2	8.9	8.9	44.5	16.8	16.8
User DelAdj:	1.00	1.00	1.00	1.00	1.00	1.00	1.00	1.00	1.00	1.00	1.00	1.00
AdjDel/Veh:	28.4	25.7	26.1	26.1	27.7	27.7	32.2	8.9	8.9	44.5	16.8	16.8
LOS by Move:	C	C	C	C	C	C	C	A	A	D	B	B
HCM2kAvgQ:	3	1	1	1	4	4	4	5	5	2	6	6

Note: Queue reported is the number of cars per lane.

City of Murrieta General Plan
Existing
PM Peak Hour

Level Of Service Computation Report
2000 HCM 4-Way Stop Method (Base Volume Alternative)

Intersection #2 Leon Road & Scott Road

Cycle (sec): 100 Critical Vol./Cap.(X): 0.617
Loss Time (sec): 0 (Y+R=4.0 sec) Average Delay (sec/veh): 13.4
Optimal Cycle: 0 Level Of Service: B

Street Name:	Leon Rd						Scott Rd					
Approach:	North Bound			South Bound			East Bound			West Bound		
Movement:	L -	T -	R	L -	T -	R	L -	T -	R	L -	T -	R
Control:	Stop Sign			Stop Sign			Stop Sign			Stop Sign		
Rights:	Include			Include			Include			Include		
Min. Green:	0	0	0	0	0	0	0	0	0	0	0	0
Lanes:	0 0	1! 0	0	0 0	1! 0	0	0 0	1! 0	0	0 0	1! 0	0
Volume Module:												
Base Vol:	277	12	15	2	10	7	7	181	261	6	204	5
Growth Adj:	1.00	1.00	1.00	1.00	1.00	1.00	1.00	1.00	1.00	1.00	1.00	1.00
Initial Bse:	277	12	15	2	10	7	7	181	261	6	204	5
User Adj:	1.00	1.00	1.00	1.00	1.00	1.00	1.00	1.00	1.00	1.00	1.00	1.00
PHF Adj:	1.00	1.00	1.00	1.00	1.00	1.00	1.00	1.00	1.00	1.00	1.00	1.00
PHF Volume:	277	12	15	2	10	7	7	181	261	6	204	5
Reduct Vol:	0	0	0	0	0	0	0	0	0	0	0	0
Reduced Vol:	277	12	15	2	10	7	7	181	261	6	204	5
PCE Adj:	1.00	1.00	1.00	1.00	1.00	1.00	1.00	1.00	1.00	1.00	1.00	1.00
MLF Adj:	1.00	1.00	1.00	1.00	1.00	1.00	1.00	1.00	1.00	1.00	1.00	1.00
FinalVolume:	277	12	15	2	10	7	7	181	261	6	204	5
Saturation Flow Module:												
Adjustment:	1.00	1.00	1.00	1.00	1.00	1.00	1.00	1.00	1.00	1.00	1.00	1.00
Lanes:	0.91	0.04	0.05	0.10	0.53	0.37	0.02	0.40	0.58	0.03	0.95	0.02
Final Sat.:	549	24	30	55	273	191	11	293	423	18	598	15
Capacity Analysis Module:												
Vol/Sat:	0.50	0.50	0.50	0.04	0.04	0.04	0.62	0.62	0.62	0.34	0.34	0.34
Crit Moves:			****	****				****				****
Delay/Veh:	13.7	13.7	13.7	9.0	9.0	9.0	14.7	14.7	14.7	10.9	10.9	10.9
Delay Adj:	1.00	1.00	1.00	1.00	1.00	1.00	1.00	1.00	1.00	1.00	1.00	1.00
AdjDel/Veh:	13.7	13.7	13.7	9.0	9.0	9.0	14.7	14.7	14.7	10.9	10.9	10.9
LOS by Move:	B	B	B	A	A	A	B	B	B	B	B	B
ApproachDel:	13.7			9.0			14.7			10.9		
Delay Adj:	1.00			1.00			1.00			1.00		
ApprAdjDel:	13.7			9.0			14.7			10.9		
LOS by Appr:	B			A			B			B		
AllWayAvgQ:	0.8	0.8	0.8	0.0	0.0	0.0	1.4	1.4	1.4	0.4	0.4	0.4

Note: Queue reported is the number of cars per lane.

City of Murrieta General Plan
Existing
PM Peak Hour

Level Of Service Computation Report
2000 HCM Operations Method (Base Volume Alternative)

Intersection #3 Winchester Road/SR-79 & Scott Road

Cycle (sec): 100 Critical Vol./Cap.(X): 0.450
Loss Time (sec): 0 (Y+R=4.0 sec) Average Delay (sec/veh): 18.5
Optimal Cycle: 34 Level Of Service: B

Street Name:	Winchester Road/SR-79						Scott Road					
Approach:	North Bound			South Bound			East Bound			West Bound		
Movement:	L -	T -	R	L -	T -	R	L -	T -	R	L -	T -	R
Control:	Protected			Protected			Permitted			Permitted		
Rights:	Include			Include			Include			Include		
Min. Green:	0	0	0	0	0	0	0	0	0	0	0	0
Lanes:	1 0	1	1 0	1 0	1	1 0	0 0	1!	0 0	0 0	0	1 0
Volume Module:												
Base Vol:	75	891	3	123	553	80	81	60	67	0	59	171
Growth Adj:	1.00	1.00	1.00	1.00	1.00	1.00	1.00	1.00	1.00	1.00	1.00	1.00
Initial Bse:	75	891	3	123	553	80	81	60	67	0	59	171
User Adj:	1.00	1.00	1.00	1.00	1.00	1.00	1.00	1.00	1.00	1.00	1.00	1.00
PHF Adj:	1.00	1.00	1.00	1.00	1.00	1.00	1.00	1.00	1.00	1.00	1.00	1.00
PHF Volume:	75	891	3	123	553	80	81	60	67	0	59	171
Reduct Vol:	0	0	0	0	0	0	0	0	0	0	0	0
Reduced Vol:	75	891	3	123	553	80	81	60	67	0	59	171
PCE Adj:	1.00	1.00	1.00	1.00	1.00	1.00	1.00	1.00	1.00	1.00	1.00	1.00
MLF Adj:	1.00	1.00	1.00	1.00	1.00	1.00	1.00	1.00	1.00	1.00	1.00	1.00
FinalVolume:	75	891	3	123	553	80	81	60	67	0	59	171
Saturation Flow Module:												
Sat/Lane:	1900	1900	1900	1900	1900	1900	1900	1900	1900	1900	1900	1900
Adjustment:	0.95	0.95	0.95	0.95	0.93	0.93	0.84	0.84	0.84	1.00	0.90	0.90
Lanes:	1.00	1.99	0.01	1.00	1.75	0.25	0.39	0.29	0.32	0.00	0.26	0.74
Final Sat.:	1805	3598	12	1805	3094	448	622	461	514	0	439	1271
Capacity Analysis Module:												
Vol/Sat:	0.04	0.25	0.25	0.07	0.18	0.18	0.13	0.13	0.13	0.00	0.13	0.13
Crit Moves:		****		****							****	
Green/Cycle:	0.13	0.55	0.55	0.15	0.57	0.57	0.30	0.30	0.30	0.00	0.30	0.30
Volume/Cap:	0.31	0.45	0.45	0.45	0.31	0.31	0.44	0.44	0.44	0.00	0.45	0.45
Delay/Veh:	40.0	13.6	13.6	39.8	11.4	11.4	28.9	28.9	28.9	0.0	29.0	29.0
User DelAdj:	1.00	1.00	1.00	1.00	1.00	1.00	1.00	1.00	1.00	1.00	1.00	1.00
AdjDel/Veh:	40.0	13.6	13.6	39.8	11.4	11.4	28.9	28.9	28.9	0.0	29.0	29.0
LOS by Move:	D	B	B	D	B	B	C	C	C	A	C	C
HCM2kAvgQ:	2	9	9	4	5	5	5	5	5	0	6	6

Note: Queue reported is the number of cars per lane.

City of Murrieta General Plan
Existing
PM Peak Hour

Level Of Service Computation Report
2000 HCM 4-Way Stop Method (Base Volume Alternative)

Intersection #4 Antelope Road & Keller Road

Cycle (sec): 100 Critical Vol./Cap.(X): 0.688
Loss Time (sec): 0 (Y+R=4.0 sec) Average Delay (sec/veh): 13.5
Optimal Cycle: 0 Level Of Service: B

Street Name:	Antelope Road						Keller Road					
Approach:	North Bound			South Bound			East Bound			West Bound		
Movement:	L -	T -	R	L -	T -	R	L -	T -	R	L -	T -	R
Control:	Stop Sign			Stop Sign			Stop Sign			Stop Sign		
Rights:	Include			Include			Include			Include		
Min. Green:	0	0	0	0	0	0	0	0	0	0	0	0
Lanes:	0 0	1!	0 0	0 0	1!	0 0	0 0	1!	0 0	0 0	1!	0 0
Volume Module:												
Base Vol:	14	315	271	19	93	7	10	5	7	72	2	19
Growth Adj:	1.00	1.00	1.00	1.00	1.00	1.00	1.00	1.00	1.00	1.00	1.00	1.00
Initial Bse:	14	315	271	19	93	7	10	5	7	72	2	19
User Adj:	1.00	1.00	1.00	1.00	1.00	1.00	1.00	1.00	1.00	1.00	1.00	1.00
PHF Adj:	1.00	1.00	1.00	1.00	1.00	1.00	1.00	1.00	1.00	1.00	1.00	1.00
PHF Volume:	14	315	271	19	93	7	10	5	7	72	2	19
Reduct Vol:	0	0	0	0	0	0	0	0	0	0	0	0
Reduced Vol:	14	315	271	19	93	7	10	5	7	72	2	19
PCE Adj:	1.00	1.00	1.00	1.00	1.00	1.00	1.00	1.00	1.00	1.00	1.00	1.00
MLF Adj:	1.00	1.00	1.00	1.00	1.00	1.00	1.00	1.00	1.00	1.00	1.00	1.00
FinalVolume:	14	315	271	19	93	7	10	5	7	72	2	19
Saturation Flow Module:												
Adjustment:	1.00	1.00	1.00	1.00	1.00	1.00	1.00	1.00	1.00	1.00	1.00	1.00
Lanes:	0.02	0.53	0.45	0.16	0.78	0.06	0.45	0.23	0.32	0.78	0.02	0.20
Final Sat.:	20	458	394	115	563	42	265	132	185	462	13	122
Capacity Analysis Module:												
Vol/Sat:	0.69	0.69	0.69	0.17	0.17	0.17	0.04	0.04	0.04	0.16	0.16	0.16
Crit Moves:		****			****			****			****	
Delay/Veh:	15.3	15.3	15.3	8.7	8.7	8.7	8.6	8.6	8.6	9.3	9.3	9.3
Delay Adj:	1.00	1.00	1.00	1.00	1.00	1.00	1.00	1.00	1.00	1.00	1.00	1.00
AdjDel/Veh:	15.3	15.3	15.3	8.7	8.7	8.7	8.6	8.6	8.6	9.3	9.3	9.3
LOS by Move:	C	C	C	A	A	A	A	A	A	A	A	A
ApproachDel:	15.3			8.7			8.6			9.3		
Delay Adj:	1.00			1.00			1.00			1.00		
ApprAdjDel:	15.3			8.7			8.6			9.3		
LOS by Appr:	C			A			A			A		
AllWayAvgQ:	2.0	2.0	2.0	0.2	0.2	0.2	0.0	0.0	0.0	0.1	0.1	0.1

Note: Queue reported is the number of cars per lane.

City of Murrieta General Plan
Existing
PM Peak Hour

Level Of Service Computation Report
2000 HCM 4-Way Stop Method (Base Volume Alternative)

Intersection #5 Menifee Road - Meadowlark Road & Keller Road

Cycle (sec): 100 Critical Vol./Cap.(X): 0.172
Loss Time (sec): 0 (Y+R=4.0 sec) Average Delay (sec/veh): 8.2
Optimal Cycle: 0 Level Of Service: A

Street Name:	Menifee Road - Meadowlark Road						Keller Road					
Approach:	North Bound			South Bound			East Bound			West Bound		
Movement:	L	- T	- R	L	- T	- R	L	- T	- R	L	- T	- R
Control:	Stop Sign			Stop Sign			Stop Sign			Stop Sign		
Rights:	Include			Include			Include			Include		
Min. Green:	0	0	0	0	0	0	0	0	0	0	0	0
Lanes:	0 0	0 0	0	1 0	0 0	1	1 0	1 0	0	1 0	1 0	1
Volume Module:												
Base Vol:	0	0	0	12	0	48	119	32	0	0	20	10
Growth Adj:	1.00	1.00	1.00	1.00	1.00	1.00	1.00	1.00	1.00	1.00	1.00	1.00
Initial Bse:	0	0	0	12	0	48	119	32	0	0	20	10
User Adj:	1.00	1.00	1.00	1.00	1.00	1.00	1.00	1.00	1.00	1.00	1.00	1.00
PHF Adj:	1.00	1.00	1.00	1.00	1.00	1.00	1.00	1.00	1.00	1.00	1.00	1.00
PHF Volume:	0	0	0	12	0	48	119	32	0	0	20	10
Reduct Vol:	0	0	0	0	0	0	0	0	0	0	0	0
Reduced Vol:	0	0	0	12	0	48	119	32	0	0	20	10
PCE Adj:	1.00	1.00	1.00	1.00	1.00	1.00	1.00	1.00	1.00	1.00	1.00	1.00
MLF Adj:	1.00	1.00	1.00	1.00	1.00	1.00	1.00	1.00	1.00	1.00	1.00	1.00
FinalVolume:	0	0	0	12	0	48	119	32	0	0	20	10
Saturation Flow Module:												
Adjustment:	1.00	1.00	1.00	1.00	1.00	1.00	1.00	1.00	1.00	1.00	1.00	1.00
Lanes:	0.00	0.00	0.00	1.00	0.00	1.00	1.00	1.00	0.00	1.00	1.00	1.00
Final Sat.:	0	0	0	645	0	820	691	764	0	649	714	827
Capacity Analysis Module:												
Vol/Sat:	xxxx	xxxx	xxxx	0.02	xxxx	0.06	0.17	0.04	xxxx	0.00	0.03	0.01
Crit Moves:						****	****				****	
Delay/Veh:	0.0	0.0	0.0	8.2	0.0	7.2	8.9	7.6	0.0	0.0	7.8	7.0
Delay Adj:	1.00	1.00	1.00	1.00	1.00	1.00	1.00	1.00	1.00	1.00	1.00	1.00
AdjDel/Veh:	0.0	0.0	0.0	8.2	0.0	7.2	8.9	7.6	0.0	0.0	7.8	7.0
LOS by Move:	*	*	*	A	*	A	A	A	*	*	A	A
ApproachDel:	xxxxxx			7.4			8.6			7.5		
Delay Adj:	xxxxx			1.00			1.00			1.00		
ApprAdjDel:	xxxxxx			7.4			8.6			7.5		
LOS by Appr:	*			A			A			A		
AllWayAvgQ:	0.0	0.0	0.0	0.0	0.0	0.1	0.2	0.0	0.0	0.0	0.0	0.0

Note: Queue reported is the number of cars per lane.

City of Murrieta General Plan
Existing
PM Peak Hour

Level Of Service Computation Report
2000 HCM Unsignalized Method (Base Volume Alternative)

Intersection #7 Leon Road & Keller Road

Average Delay (sec/veh): 0.3 Worst Case Level Of Service: B[11.6]

Street Name:	Leon Road						Keller Road					
Approach:	North Bound			South Bound			East Bound			West Bound		
Movement:	L	- T	- R	L	- T	- R	L	- T	- R	L	- T	- R
Control:	Uncontrolled			Uncontrolled			Stop Sign			Stop Sign		
Rights:	Include			Include			Include			Include		
Lanes:	0 0	1! 0	0	0 1	0 0	0	0 0	0 0	1	0 0	1! 0	0
Volume Module:												
Base Vol:	1	258	4	7	240	0	0	0	1	5	0	3
Growth Adj:	1.00	1.00	1.00	1.00	1.00	1.00	1.00	1.00	1.00	1.00	1.00	1.00
Initial Bse:	1	258	4	7	240	0	0	0	1	5	0	3
User Adj:	1.00	1.00	1.00	1.00	1.00	1.00	1.00	1.00	1.00	1.00	1.00	1.00
PHF Adj:	1.00	1.00	1.00	1.00	1.00	1.00	1.00	1.00	1.00	1.00	1.00	1.00
PHF Volume:	1	258	4	7	240	0	0	0	1	5	0	3
Reduct Vol:	0	0	0	0	0	0	0	0	0	0	0	0
FinalVolume:	1	258	4	7	240	0	0	0	1	5	0	3
Critical Gap Module:												
Critical Gp:	4.1	xxxx	xxxxx	4.1	xxxx	xxxxx	xxxxx	xxxx	6.2	7.1	6.5	6.2
FollowUpTim:	2.2	xxxx	xxxxx	2.2	xxxx	xxxxx	xxxxx	xxxx	3.3	3.5	4.0	3.3
Capacity Module:												
Cnflict Vol:	240	xxxx	xxxxx	262	xxxx	xxxxx	xxxx	xxxx	240	517	516	260
Potent Cap.:	1339	xxxx	xxxxx	1314	xxxx	xxxxx	xxxx	xxxx	804	472	466	784
Move Cap.:	1339	xxxx	xxxxx	1314	xxxx	xxxxx	xxxx	xxxx	804	470	463	784
Volume/Cap:	0.00	xxxx	xxxx	0.01	xxxx	xxxx	xxxx	xxxx	0.00	0.01	0.00	0.00
Level Of Service Module:												
2Way95thQ:	0.0	xxxx	xxxxx	0.0	xxxx	xxxxx	xxxx	xxxx	0.0	xxxx	xxxx	xxxxx
Control Del:	7.7	xxxx	xxxxx	7.8	xxxx	xxxxx	xxxxx	xxxx	9.5	xxxxx	xxxx	xxxxx
LOS by Move:	A	*	*	A	*	*	*	*	A	*	*	*
Movement:	LT -	LTR -	RT	LT -	LTR -	RT	LT -	LTR -	RT	LT -	LTR -	RT
Shared Cap.:	xxxx	xxxx	xxxxx	xxxx	xxxx	xxxxx	xxxx	xxxx	xxxxx	xxxx	553	xxxxx
SharedQueue:	xxxxx	xxxx	xxxxx	0.0	xxxx	xxxxx	xxxxx	xxxx	xxxxx	xxxxx	0.0	xxxxx
Shrd ConDel:	xxxxx	xxxx	xxxxx	7.8	xxxx	xxxxx	xxxxx	xxxx	xxxxx	xxxxx	11.6	xxxxx
Shared LOS:	*	*	*	A	*	*	*	*	*	*	B	*
ApproachDel:	xxxxxx			xxxxxx			9.5			11.6		
ApproachLOS:	*			*			A			B		

Note: Queue reported is the number of cars per lane.

City of Murrieta General Plan
Existing
PM Peak Hour

Level Of Service Computation Report
2000 HCM Unsignalized Method (Base Volume Alternative)

Intersection #8 Winchester Road - SR-79 & Keller Road

Average Delay (sec/veh): 0.1 Worst Case Level Of Service: C[23.0]

Street Name:	Winchester Road - SR-79									Keller Road											
Approach:	North Bound					South Bound				East Bound					West Bound						
Movement:	L	-	T	-	R	L	-	T	-	R	L	-	T	-	R	L	-	T	-	R	
Control:	Uncontrolled					Uncontrolled					Stop Sign					Stop Sign					
Rights:	Include					Include					Include					Include					
Lanes:	0	0	1!	0	0	0	0	0	1	0	0	0	0	0	1	0	0	1!	0	0	
Volume Module:																					
Base Vol:	1	913	3		0	624	2		0	0	1		1	0	3						
Growth Adj:	1.00	1.00	1.00		1.00	1.00	1.00		1.00	1.00	1.00		1.00	1.00	1.00						
Initial Bse:	1	913	3		0	624	2		0	0	1		1	0	3						
User Adj:	1.00	1.00	1.00		1.00	1.00	1.00		1.00	1.00	1.00		1.00	1.00	1.00						
PHF Adj:	1.00	1.00	1.00		1.00	1.00	1.00		1.00	1.00	1.00		1.00	1.00	1.00						
PHF Volume:	1	913	3		0	624	2		0	0	1		1	0	3						
Reduct Vol:	0	0	0		0	0	0		0	0	0		0	0	0						
FinalVolume:	1	913	3		0	624	2		0	0	1		1	0	3						
Critical Gap Module:																					
Critical Gp:	4.1	xxxx	xxxxx	xxxxx	xxxx	xxxxx	xxxxx	xxxx			6.2		7.1	6.5	6.2						
FollowUpTim:	2.2	xxxx	xxxxx	xxxxx	xxxx	xxxxx	xxxxx	xxxx			3.3		3.5	4.0	3.3						
Capacity Module:																					
Cnflict Vol:	626	xxxx	xxxxx	xxxx	xxxx	xxxxx	xxxx	xxxx			625		1542	1543	915						
Potent Cap.:	965	xxxx	xxxxx	xxxx	xxxx	xxxxx	xxxx	xxxx			488		95	116	334						
Move Cap.:	965	xxxx	xxxxx	xxxx	xxxx	xxxxx	xxxx	xxxx			488		95	116	334						
Volume/Cap:	0.00	xxxx	xxxx	xxxx	xxxx	xxxx	xxxx	xxxx			0.00		0.01	0.00	0.01						
Level Of Service Module:																					
2Way95thQ:	0.0	xxxx	xxxxx	xxxx	xxxx	xxxxx	xxxx	xxxx			0.0		xxxx	xxxx	xxxxx						
Control Del:	8.7	xxxx	xxxxx	xxxxx	xxxx	xxxxx	xxxxx	xxxx			12.4		xxxxx	xxxx	xxxxx						
LOS by Move:	A	*	*	*	*	*	*	*			B		*	*	*						
Movement:	LT - LTR - RT					LT - LTR - RT					LT - LTR - RT					LT - LTR - RT					
Shared Cap.:	xxxx	xxxx	xxxxx	xxxx	xxxx	xxxxx	xxxx	xxxx	xxxxx		xxxx		204	xxxxx							
SharedQueue:	xxxxx	xxxx	xxxxx	xxxxx	xxxx	xxxxx	xxxxx	xxxx	xxxxx		xxxxx		0.1	xxxxx							
Shrd ConDel:	xxxxx	xxxx	xxxxx	xxxxx	xxxx	xxxxx	xxxxx	xxxx	xxxxx		xxxxx		23.0	xxxxx							
Shared LOS:	*	*	*	*	*	*	*	*	*		*		C	*							
ApproachDel:	xxxxxx			xxxxxx			12.4						23.0								
ApproachLOS:	*			*			B						C								

Note: Queue reported is the number of cars per lane.

City of Murrieta General Plan
Existing
PM Peak Hour

Level Of Service Computation Report
2000 HCM Unsignalized Method (Base Volume Alternative)

Intersection #12 Leon Road & Jean Nicholas

Average Delay (sec/veh): 1.1 Worst Case Level Of Service: B[10.2]

Street Name:	Leon Road									Jean Nicholas											
Approach:	North Bound					South Bound				East Bound					West Bound						
Movement:	L	-	T	-	R	L	-	T	-	R	L	-	T	-	R	L	-	T	-	R	
Control:	Uncontrolled					Uncontrolled					Stop Sign					Stop Sign					
Rights:	Include					Include					Include					Include					
Lanes:	0	0	1	0	1	1	0	1	0	0	0	0	0	0	0	0	0	1!	0	0	
Volume Module:																					
Base Vol:	0	229	19		24	224	0		0	0	0		8	0	34						
Growth Adj:	1.00	1.00	1.00		1.00	1.00	1.00		1.00	1.00	1.00		1.00	1.00	1.00						
Initial Bse:	0	229	19		24	224	0		0	0	0		8	0	34						
User Adj:	1.00	1.00	1.00		1.00	1.00	1.00		1.00	1.00	1.00		1.00	1.00	1.00						
PHF Adj:	1.00	1.00	1.00		1.00	1.00	1.00		1.00	1.00	1.00		1.00	1.00	1.00						
PHF Volume:	0	229	19		24	224	0		0	0	0		8	0	34						
Reduct Vol:	0	0	0		0	0	0		0	0	0		0	0	0						
FinalVolume:	0	229	19		24	224	0		0	0	0		8	0	34						
Critical Gap Module:																					
Critical Gp:	xxxxx	xxxx	xxxxx		4.1	xxxx	xxxxx	xxxxx	xxxx	xxxxx			6.4	6.5	6.2						
FollowUpTim:	xxxxx	xxxx	xxxxx		2.2	xxxx	xxxxx	xxxxx	xxxx	xxxxx			3.5	4.0	3.3						
Capacity Module:																					
Cnflict Vol:	xxxx	xxxx	xxxxx		248	xxxx	xxxxx	xxxx	xxxx	xxxxx			501	501	229						
Potent Cap.:	xxxx	xxxx	xxxxx		1330	xxxx	xxxxx	xxxx	xxxx	xxxxx			533	475	815						
Move Cap.:	xxxx	xxxx	xxxxx		1330	xxxx	xxxxx	xxxx	xxxx	xxxxx			526	466	815						
Volume/Cap:	xxxx	xxxx	xxxx		0.02	xxxx	xxxx	xxxx	xxxx	xxxx			0.02	0.00	0.04						
Level Of Service Module:																					
2Way95thQ:	xxxx	xxxx	xxxxx		0.1	xxxx	xxxxx	xxxx	xxxx	xxxxx	xxxx	xxxx	xxxxx								
Control Del:	xxxxx	xxxx	xxxxx		7.8	xxxx	xxxxx	xxxxx	xxxx	xxxxx	xxxxx	xxxx	xxxxx								
LOS by Move:	*	*	*		A	*	*	*	*	*	*	*	*								
Movement:	LT - LTR - RT					LT - LTR - RT					LT - LTR - RT					LT - LTR - RT					
Shared Cap.:	xxxx	xxxx	xxxxx	xxxx	xxxx	xxxxx	xxxx	xxxx	xxxxx	xxxx	738	xxxxx									
SharedQueue:	xxxxx	xxxx	xxxxx	xxxxx	xxxx	xxxxx	xxxxx	xxxx	xxxxx	xxxxx	0.2	xxxxx									
Shrd ConDel:	xxxxx	xxxx	xxxxx	xxxxx	xxxx	xxxxx	xxxxx	xxxx	xxxxx	xxxxx	10.2	xxxxx									
Shared LOS:	*	*	*	*	*	*	*	*	*	*	B	*									
ApproachDel:	xxxxxx			xxxxxx			xxxxxx				10.2										
ApproachLOS:	*			*			*				B										

Note: Queue reported is the number of cars per lane.

City of Murrieta General Plan
Existing
PM Peak Hour

Level Of Service Computation Report
2000 HCM Operations Method (Base Volume Alternative)

Intersection #13 Winchester Road - SR-79 & Nicholas - Skyview

Cycle (sec): 100 Critical Vol./Cap.(X): 0.325
Loss Time (sec): 0 (Y+R=4.0 sec) Average Delay (sec/veh): 5.1
Optimal Cycle: 34 Level Of Service: A

Street Name:	Winchester Road - SR-79						Nicholas - Skyview					
Approach:	North Bound			South Bound			East Bound			West Bound		
Movement:	L - T - R			L - T - R			L - T - R			L - T - R		
Control:	Protected			Protected			Protected			Protected		
Rights:	Include			Include			Include			Include		
Min. Green:	0	0	0	0	0	0	0	0	0	0	0	0
Lanes:	1 0	2	0 1	1 0	1	1 0	1 0	1	1 0	1 0	1	0 1
Volume Module:												
Base Vol:	78	1120	2	2	632	18	25	0	22	1	0	3
Growth Adj:	1.00	1.00	1.00	1.00	1.00	1.00	1.00	1.00	1.00	1.00	1.00	1.00
Initial Bse:	78	1120	2	2	632	18	25	0	22	1	0	3
User Adj:	1.00	1.00	1.00	1.00	1.00	1.00	1.00	1.00	1.00	1.00	1.00	1.00
PHF Adj:	1.00	1.00	1.00	1.00	1.00	1.00	1.00	1.00	1.00	1.00	1.00	1.00
PHF Volume:	78	1120	2	2	632	18	25	0	22	1	0	3
Reduct Vol:	0	0	0	0	0	0	0	0	0	0	0	0
Reduced Vol:	78	1120	2	2	632	18	25	0	22	1	0	3
PCE Adj:	1.00	1.00	1.00	1.00	1.00	1.00	1.00	1.00	1.00	1.00	1.00	1.00
MLF Adj:	1.00	1.00	1.00	1.00	1.00	1.00	1.00	1.00	1.00	1.00	1.00	1.00
FinalVolume:	78	1120	2	2	632	18	25	0	22	1	0	3
Saturation Flow Module:												
Sat/Lane:	1900	1900	1900	1900	1900	1900	1900	1900	1900	1900	1900	1900
Adjustment:	0.95	0.95	0.85	0.95	0.95	0.95	0.95	0.95	0.81	0.95	1.00	0.85
Lanes:	1.00	2.00	1.00	1.00	1.94	0.06	1.00	1.00	1.00	1.00	1.00	1.00
Final Sat.:	1805	3610	1615	1805	3496	100	1805	1805	1534	1805	1900	1615
Capacity Analysis Module:												
Vol/Sat:	0.04	0.31	0.00	0.00	0.18	0.18	0.01	0.00	0.01	0.00	0.00	0.00
Crit Moves:		****		****			****				****	
Green/Cycle:	0.18	0.95	0.95	0.00	0.77	0.77	0.04	0.00	0.04	0.00	0.00	0.00
Volume/Cap:	0.23	0.33	0.00	0.33	0.23	0.23	0.33	0.00	0.35	0.35	0.00	1.17
Delay/Veh:	35.1	0.2	0.1	78.1	3.2	3.2	48.9	0.0	50.0	111.4	0.0	699.2
User DelAdj:	1.00	1.00	1.00	1.00	1.00	1.00	1.00	1.00	1.00	1.00	1.00	1.00
AdjDel/Veh:	35.1	0.2	0.1	78.1	3.2	3.2	48.9	0.0	50.0	111.4	0.0	699.2
LOS by Move:	D	A	A	E	A	A	D	A	D	F	A	F
HCM2kAvgQ:	2	2	0	0	3	3	1	0	1	0	0	1

Note: Queue reported is the number of cars per lane.

City of Murrieta General Plan
Existing
PM Peak Hour

Level Of Service Computation Report
2000 HCM Operations Method (Base Volume Alternative)

Intersection #16 Leon Road & Max Gillis Road

Cycle (sec): 100 Critical Vol./Cap.(X): 0.293
Loss Time (sec): 0 (Y+R=4.0 sec) Average Delay (sec/veh): 25.4
Optimal Cycle: 32 Level Of Service: C

Street Name:	Leon Road						Max Gillis Road					
Approach:	North Bound			South Bound			East Bound			West Bound		
Movement:	L - T - R			L - T - R			L - T - R			L - T - R		
Control:	Protected			Protected			Protected			Protected		
Rights:	Include			Include			Include			Include		
Min. Green:	0	0	0	0	0	0	0	0	0	0	0	0
Lanes:	2 0	2	0 1	2 0	1	1 0	2 0	1	1 0	2 0	1	1 0
Volume Module:												
Base Vol:	84	62	168	197	22	39	18	70	25	98	216	212
Growth Adj:	1.00	1.00	1.00	1.00	1.00	1.00	1.00	1.00	1.00	1.00	1.00	1.00
Initial Bse:	84	62	168	197	22	39	18	70	25	98	216	212
User Adj:	1.00	1.00	1.00	1.00	1.00	1.00	1.00	1.00	1.00	1.00	1.00	1.00
PHF Adj:	1.00	1.00	1.00	1.00	1.00	1.00	1.00	1.00	1.00	1.00	1.00	1.00
PHF Volume:	84	62	168	197	22	39	18	70	25	98	216	212
Reduct Vol:	0	0	0	0	0	0	0	0	0	0	0	0
Reduced Vol:	84	62	168	197	22	39	18	70	25	98	216	212
PCE Adj:	1.00	1.00	1.00	1.00	1.00	1.00	1.00	1.00	1.00	1.00	1.00	1.00
MLF Adj:	1.00	1.00	1.00	1.00	1.00	1.00	1.00	1.00	1.00	1.00	1.00	1.00
FinalVolume:	84	62	168	197	22	39	18	70	25	98	216	212
Saturation Flow Module:												
Sat/Lane:	1900	1900	1900	1900	1900	1900	1900	1900	1900	1900	1900	1900
Adjustment:	0.92	0.95	0.85	0.92	0.86	0.86	0.92	0.91	0.91	0.92	0.88	0.88
Lanes:	2.00	2.00	1.00	2.00	1.00	1.00	2.00	1.47	0.53	2.00	1.01	0.99
Final Sat.:	3502	3610	1615	3502	1632	1632	3502	2556	913	3502	1687	1656
Capacity Analysis Module:												
Vol/Sat:	0.02	0.02	0.10	0.06	0.01	0.02	0.01	0.03	0.03	0.03	0.13	0.13
Crit Moves:			****	****			****				****	
Green/Cycle:	0.27	0.35	0.35	0.19	0.27	0.27	0.02	0.22	0.22	0.23	0.44	0.44
Volume/Cap:	0.09	0.05	0.29	0.29	0.05	0.09	0.29	0.12	0.12	0.12	0.29	0.29
Delay/Veh:	27.1	21.2	23.5	34.9	26.8	27.2	51.2	31.0	31.0	30.6	18.3	18.3
User DelAdj:	1.00	1.00	1.00	1.00	1.00	1.00	1.00	1.00	1.00	1.00	1.00	1.00
AdjDel/Veh:	27.1	21.2	23.5	34.9	26.8	27.2	51.2	31.0	31.0	30.6	18.3	18.3
LOS by Move:	C	C	C	C	C	C	D	C	C	C	B	B
HCM2kAvgQ:	1	1	4	3	1	1	1	1	1	1	4	4

Note: Queue reported is the number of cars per lane.

City of Murrieta General Plan
Existing
PM Peak Hour

Level Of Service Computation Report
2000 HCM Operations Method (Base Volume Alternative)

Intersection #17 Winchester Road - SR-79 & Max Gillis - Thompson

Cycle (sec): 100 Critical Vol./Cap.(X): 0.681
Loss Time (sec): 0 (Y+R=4.0 sec) Average Delay (sec/veh): 25.6
Optimal Cycle: 71 Level Of Service: C

Street Name:	Winchester Road - SR-79						Max Gillis - Thompson					
Approach:	North Bound			South Bound			East Bound			West Bound		
Movement:	L - T - R			L - T - R			L - T - R			L - T - R		
Control:	Protected			Protected			Protected			Protected		
Rights:	Include			Include			Include			Include		
Min. Green:	0	0	0	0	0	0	0	0	0	0	0	0
Lanes:	1 0	1	1 0	1 0	2	0 1	1 0	1	0 1	1 0	1	0 1
Volume Module:												
Base Vol:	409	1197	251	25	636	32	44	115	294	132	103	10
Growth Adj:	1.00	1.00	1.00	1.00	1.00	1.00	1.00	1.00	1.00	1.00	1.00	1.00
Initial Bse:	409	1197	251	25	636	32	44	115	294	132	103	10
User Adj:	1.00	1.00	1.00	1.00	1.00	1.00	1.00	1.00	1.00	1.00	1.00	1.00
PHF Adj:	1.00	1.00	1.00	1.00	1.00	1.00	1.00	1.00	1.00	1.00	1.00	1.00
PHF Volume:	409	1197	251	25	636	32	44	115	294	132	103	10
Reduct Vol:	0	0	0	0	0	0	0	0	0	0	0	0
Reduced Vol:	409	1197	251	25	636	32	44	115	294	132	103	10
PCE Adj:	1.00	1.00	1.00	1.00	1.00	1.00	1.00	1.00	1.00	1.00	1.00	1.00
MLF Adj:	1.00	1.00	1.00	1.00	1.00	1.00	1.00	1.00	1.00	1.00	1.00	1.00
FinalVolume:	409	1197	251	25	636	32	44	115	294	132	103	10
Saturation Flow Module:												
Sat/Lane:	1900	1900	1900	1900	1900	1900	1900	1900	1900	1900	1900	1900
Adjustment:	0.95	0.93	0.93	0.95	0.95	0.85	0.95	1.00	0.85	0.95	1.00	0.85
Lanes:	1.00	1.65	0.35	1.00	2.00	1.00	1.00	1.00	1.00	1.00	1.00	1.00
Final Sat.:	1805	2907	609	1805	3610	1615	1805	1900	1615	1805	1900	1615
Capacity Analysis Module:												
Vol/Sat:	0.23	0.41	0.41	0.01	0.18	0.02	0.02	0.06	0.18	0.07	0.05	0.01
Crit Moves:		****		****					****	****		
Green/Cycle:	0.35	0.60	0.60	0.02	0.27	0.27	0.12	0.27	0.27	0.11	0.26	0.26
Volume/Cap:	0.64	0.68	0.68	0.68	0.64	0.07	0.21	0.23	0.68	0.68	0.21	0.02
Delay/Veh:	29.5	14.2	14.2	90.0	33.5	27.0	40.5	28.8	37.2	52.4	29.3	27.7
User DelAdj:	1.00	1.00	1.00	1.00	1.00	1.00	1.00	1.00	1.00	1.00	1.00	1.00
AdjDel/Veh:	29.5	14.2	14.2	90.0	33.5	27.0	40.5	28.8	37.2	52.4	29.3	27.7
LOS by Move:	C	B	B	F	C	C	D	C	D	D	C	C
HCM2kAvgQ:	11	16	16	2	10	1	1	3	9	5	3	0

Note: Queue reported is the number of cars per lane.

City of Murrieta General Plan
Existing
PM Peak Hour

Level Of Service Computation Report
2000 HCM Operations Method (Base Volume Alternative)

Intersection #18 California Oaks Road & Clinton Keith Road

Cycle (sec): 100 Critical Vol./Cap.(X): 0.580
Loss Time (sec): 0 (Y+R=4.0 sec) Average Delay (sec/veh): 22.4
Optimal Cycle: 44 Level Of Service: C

Street Name:	California Oaks Road						Clinton Keith Road					
Approach:	North Bound			South Bound			East Bound			West Bound		
Movement:	L - T - R			L - T - R			L - T - R			L - T - R		
Control:	Permitted			Permitted			Protected			Protected		
Rights:	Include			Include			Include			Include		
Min. Green:	0	0	0	0	0	0	0	0	0	0	0	0
Lanes:	1 0	1!	0 1	0 0	0	0 0	0 0	1	1 0	1 0	2	0 0
Volume Module:												
Base Vol:	162	0	554	0	0	0	0	602	89	312	608	0
Growth Adj:	1.00	1.00	1.00	1.00	1.00	1.00	1.00	1.00	1.00	1.00	1.00	1.00
Initial Bse:	162	0	554	0	0	0	0	602	89	312	608	0
User Adj:	1.00	1.00	1.00	1.00	1.00	1.00	1.00	1.00	1.00	1.00	1.00	1.00
PHF Adj:	1.00	1.00	1.00	1.00	1.00	1.00	1.00	1.00	1.00	1.00	1.00	1.00
PHF Volume:	162	0	554	0	0	0	0	602	89	312	608	0
Reduct Vol:	0	0	0	0	0	0	0	0	0	0	0	0
Reduced Vol:	162	0	554	0	0	0	0	602	89	312	608	0
PCE Adj:	1.00	1.00	1.00	1.00	1.00	1.00	1.00	1.00	1.00	1.00	1.00	1.00
MLF Adj:	1.00	1.00	1.00	1.00	1.00	1.00	1.00	1.00	1.00	1.00	1.00	1.00
FinalVolume:	162	0	554	0	0	0	0	602	89	312	608	0
Saturation Flow Module:												
Sat/Lane:	1900	1900	1900	1900	1900	1900	1900	1900	1900	1900	1900	1900
Adjustment:	0.78	1.00	0.78	1.00	1.00	1.00	1.00	0.93	0.93	0.95	0.95	1.00
Lanes:	1.23	0.00	1.77	0.00	0.00	0.00	0.00	1.74	0.26	1.00	2.00	0.00
Final Sat.:	1810	0	2619	0	0	0	0	3085	456	1805	3610	0
Capacity Analysis Module:												
Vol/Sat:	0.09	0.00	0.21	0.00	0.00	0.00	0.00	0.20	0.20	0.17	0.17	0.00
Crit Moves:			****					****		****		
Green/Cycle:	0.37	0.00	0.37	0.00	0.00	0.00	0.00	0.34	0.34	0.30	0.63	0.00
Volume/Cap:	0.25	0.00	0.58	0.00	0.00	0.00	0.00	0.58	0.58	0.58	0.27	0.00
Delay/Veh:	22.2	0.0	26.3	0.0	0.0	0.0	0.0	28.1	28.1	31.4	8.1	0.0
User DelAdj:	1.00	1.00	1.00	1.00	1.00	1.00	1.00	1.00	1.00	1.00	1.00	1.00
AdjDel/Veh:	22.2	0.0	26.3	0.0	0.0	0.0	0.0	28.1	28.1	31.4	8.1	0.0
LOS by Move:	C	A	C	A	A	A	A	C	C	C	A	A
HCM2kAvgQ:	3	0	8	0	0	0	0	10	10	9	4	0

Note: Queue reported is the number of cars per lane.

City of Murrieta General Plan
Existing
PM Peak Hour

Level Of Service Computation Report
2000 HCM Operations Method (Base Volume Alternative)

Intersection #19 I-215 SB Off-Ramp & Clinton Keith Road

Cycle (sec): 100 Critical Vol./Cap.(X): 0.807
Loss Time (sec): 0 (Y+R=4.0 sec) Average Delay (sec/veh): 26.1
Optimal Cycle: 96 Level Of Service: C

Street Name:	I-215 SB Off-Ramp						Clinton Keith Road					
Approach:	North Bound			South Bound			East Bound			West Bound		
Movement:	L -	T -	R	L -	T -	R	L -	T -	R	L -	T -	R
Control:	Permitted			Permitted			Protected			Protected		
Rights:	Include			Include			Include			Include		
Min. Green:	0	0	0	0	0	0	0	0	0	0	0	0
Lanes:	0 0	0 0	0	1 0	0 1	0	0 0	1 0	1	1 0	1 0	0
Volume Module:												
Base Vol:	0	0	0	46	2	629	0	710	403	77	405	0
Growth Adj:	1.00	1.00	1.00	1.00	1.00	1.00	1.00	1.00	1.00	1.00	1.00	1.00
Initial Bse:	0	0	0	46	2	629	0	710	403	77	405	0
User Adj:	1.00	1.00	1.00	1.00	1.00	1.00	1.00	1.00	1.00	1.00	1.00	1.00
PHF Adj:	1.00	1.00	1.00	1.00	1.00	1.00	1.00	1.00	1.00	1.00	1.00	1.00
PHF Volume:	0	0	0	46	2	629	0	710	403	77	405	0
Reduct Vol:	0	0	0	0	0	0	0	0	0	0	0	0
Reduced Vol:	0	0	0	46	2	629	0	710	403	77	405	0
PCE Adj:	1.00	1.00	1.00	1.00	1.00	1.00	1.00	1.00	1.00	1.00	1.00	1.00
MLF Adj:	1.00	1.00	1.00	1.00	1.00	1.00	1.00	1.00	1.00	1.00	1.00	1.00
FinalVolume:	0	0	0	46	2	629	0	710	403	77	405	0
Saturation Flow Module:												
Sat/Lane:	1900	1900	1900	1900	1900	1900	1900	1900	1900	1900	1900	1900
Adjustment:	1.00	1.00	1.00	0.85	0.85	0.85	1.00	1.00	0.85	0.95	1.00	1.00
Lanes:	0.00	0.00	0.00	1.00	0.01	0.99	0.00	1.00	1.00	1.00	1.00	0.00
Final Sat.:	0	0	0	1615	5	1610	0	1900	1615	1805	1900	0
Capacity Analysis Module:												
Vol/Sat:	0.00	0.00	0.00	0.03	0.39	0.39	0.00	0.37	0.25	0.04	0.21	0.00
Crit Moves:					****			****		****		
Green/Cycle:	0.00	0.00	0.00	0.48	0.48	0.48	0.00	0.46	0.46	0.05	0.52	0.00
Volume/Cap:	0.00	0.00	0.00	0.06	0.81	0.81	0.00	0.81	0.54	0.81	0.41	0.00
Delay/Veh:	0.0	0.0	0.0	13.7	28.1	28.1	0.0	28.6	20.0	84.8	15.2	0.0
User DelAdj:	1.00	1.00	1.00	1.00	1.00	1.00	1.00	1.00	1.00	1.00	1.00	1.00
AdjDel/Veh:	0.0	0.0	0.0	13.7	28.1	28.1	0.0	28.6	20.0	84.8	15.2	0.0
LOS by Move:	A	A	A	B	C	C	A	C	C	F	B	A
HCM2kAvgQ:	0	0	0	1	18	18	0	20	9	4	8	0

Note: Queue reported is the number of cars per lane.

City of Murrieta General Plan
Existing
PM Peak Hour

Level Of Service Computation Report
2000 HCM Operations Method (Base Volume Alternative)

Intersection #20 I-215 NB Off Ramp & Clinton Keith Road

Cycle (sec): 100 Critical Vol./Cap.(X): 0.565
Loss Time (sec): 0 (Y+R=4.0 sec) Average Delay (sec/veh): 23.1
Optimal Cycle: 43 Level Of Service: C

Street Name:	I-215 NB Off Ramp						Clinton Keith Road					
Approach:	North Bound			South Bound			East Bound			West Bound		
Movement:	L -	T -	R	L -	T -	R	L -	T -	R	L -	T -	R
Control:	Permitted			Permitted			Protected			Protected		
Rights:	Include			Include			Include			Include		
Min. Green:	0	0	0	0	0	0	0	0	0	0	0	0
Lanes:	0 0	1! 0	1	0 0	0 0	0	1 0	1 0	0	0 0	1 0	1
Volume Module:												
Base Vol:	241	1	88	0	0	0	455	274	0	0	261	81
Growth Adj:	1.00	1.00	1.00	1.00	1.00	1.00	1.00	1.00	1.00	1.00	1.00	1.00
Initial Bse:	241	1	88	0	0	0	455	274	0	0	261	81
User Adj:	1.00	1.00	1.00	1.00	1.00	1.00	1.00	1.00	1.00	1.00	1.00	1.00
PHF Adj:	1.00	1.00	1.00	1.00	1.00	1.00	1.00	1.00	1.00	1.00	1.00	1.00
PHF Volume:	241	1	88	0	0	0	455	274	0	0	261	81
Reduct Vol:	0	0	0	0	0	0	0	0	0	0	0	0
Reduced Vol:	241	1	88	0	0	0	455	274	0	0	261	81
PCE Adj:	1.00	1.00	1.00	1.00	1.00	1.00	1.00	1.00	1.00	1.00	1.00	1.00
MLF Adj:	1.00	1.00	1.00	1.00	1.00	1.00	1.00	1.00	1.00	1.00	1.00	1.00
FinalVolume:	241	1	88	0	0	0	455	274	0	0	261	81
Saturation Flow Module:												
Sat/Lane:	1900	1900	1900	1900	1900	1900	1900	1900	1900	1900	1900	1900
Adjustment:	0.86	0.86	0.86	1.00	1.00	1.00	0.95	1.00	1.00	1.00	1.00	0.85
Lanes:	0.84	0.01	1.15	0.00	0.00	0.00	1.00	1.00	0.00	0.00	1.00	1.00
Final Sat.:	1369	6	1875	0	0	0	1805	1900	0	0	1900	1615
Capacity Analysis Module:												
Vol/Sat:	0.18	0.18	0.05	0.00	0.00	0.00	0.25	0.14	0.00	0.00	0.14	0.05
Crit Moves:		****					****				****	
Green/Cycle:	0.31	0.31	0.31	0.00	0.00	0.00	0.45	0.69	0.00	0.00	0.24	0.24
Volume/Cap:	0.57	0.57	0.15	0.00	0.00	0.00	0.57	0.21	0.00	0.00	0.57	0.21
Delay/Veh:	30.1	30.1	24.9	0.0	0.0	0.0	21.5	5.7	0.0	0.0	34.9	30.4
User DelAdj:	1.00	1.00	1.00	1.00	1.00	1.00	1.00	1.00	1.00	1.00	1.00	1.00
AdjDel/Veh:	30.1	30.1	24.9	0.0	0.0	0.0	21.5	5.7	0.0	0.0	34.9	30.4
LOS by Move:	C	C	C	A	A	A	C	A	A	A	C	C
HCM2kAvgQ:	8	8	2	0	0	0	11	3	0	0	8	2

Note: Queue reported is the number of cars per lane.

City of Murrieta General Plan
Existing
PM Peak Hour

Level Of Service Computation Report
2000 HCM 4-Way Stop Method (Base Volume Alternative)

Intersection #22 Meadowlark Lane - Whitewood Road & Clinton Keith Road

Cycle (sec): 100 Critical Vol./Cap.(X): 0.608
Loss Time (sec): 0 (Y+R=4.0 sec) Average Delay (sec/veh): 13.4
Optimal Cycle: 0 Level Of Service: B

Street Name:	Meadowlark Lane - Whitewood Road						Clinton Keith Road					
Approach:	North Bound			South Bound			East Bound			West Bound		
Movement:	L - T - R			L - T - R			L - T - R			L - T - R		
Control:	Stop Sign			Stop Sign			Stop Sign			Stop Sign		
Rights:	Include			Include			Include			Include		
Min. Green:	0	0	0	0	0	0	0	0	0	0	0	0
Lanes:	1 0	0	1 0	1 0	1 0	1	0 1	0	0 1	0 0	1 0	0
Volume Module:												
Base Vol:	248	380	3	0	78	62	161	3	152	0	1	0
Growth Adj:	1.00	1.00	1.00	1.00	1.00	1.00	1.00	1.00	1.00	1.00	1.00	1.00
Initial Bse:	248	380	3	0	78	62	161	3	152	0	1	0
User Adj:	1.00	1.00	1.00	1.00	1.00	1.00	1.00	1.00	1.00	1.00	1.00	1.00
PHF Adj:	1.00	1.00	1.00	1.00	1.00	1.00	1.00	1.00	1.00	1.00	1.00	1.00
PHF Volume:	248	380	3	0	78	62	161	3	152	0	1	0
Reduct Vol:	0	0	0	0	0	0	0	0	0	0	0	0
Reduced Vol:	248	380	3	0	78	62	161	3	152	0	1	0
PCE Adj:	1.00	1.00	1.00	1.00	1.00	1.00	1.00	1.00	1.00	1.00	1.00	1.00
MLF Adj:	1.00	1.00	1.00	1.00	1.00	1.00	1.00	1.00	1.00	1.00	1.00	1.00
FinalVolume:	248	380	3	0	78	62	161	3	152	0	1	0
Saturation Flow Module:												
Adjustment:	1.00	1.00	1.00	1.00	1.00	1.00	1.00	1.00	1.00	1.00	1.00	1.00
Lanes:	1.00	0.99	0.01	1.00	1.00	1.00	0.98	0.02	1.00	0.00	1.00	0.00
Final Sat.:	577	625	5	472	507	562	493	9	602	0	490	0
Capacity Analysis Module:												
Vol/Sat:	0.43	0.61	0.61	0.00	0.15	0.11	0.33	0.33	0.25	xxxx	0.00	xxxx
Crit Moves:		****			****		****				****	
Delay/Veh:	13.2	16.4	16.4	0.0	10.7	9.5	12.7	12.7	10.2	0.0	9.8	0.0
Delay Adj:	1.00	1.00	1.00	1.00	1.00	1.00	1.00	1.00	1.00	1.00	1.00	1.00
AdjDel/Veh:	13.2	16.4	16.4	0.0	10.7	9.5	12.7	12.7	10.2	0.0	9.8	0.0
LOS by Move:	B	C	C	*	B	A	B	B	B	*	A	*
ApproachDel:	15.1			10.2			11.5			9.8		
Delay Adj:	1.00			1.00			1.00			1.00		
ApprAdjDel:	15.1			10.2			11.5			9.8		
LOS by Appr:	C			B			B			A		
AllWayAvgQ:	0.7	1.4	1.4	0.0	0.2	0.1	0.4	0.4	0.3	0.0	0.0	0.0

Note: Queue reported is the number of cars per lane.

City of Murrieta General Plan
Existing
PM Peak Hour

Level Of Service Computation Report
2000 HCM Operations Method (Base Volume Alternative)

Intersection #25 Winchester Road - SR-79 & Benton Road

Cycle (sec): 100 Critical Vol./Cap.(X): 0.777
Loss Time (sec): 0 (Y+R=4.0 sec) Average Delay (sec/veh): 21.2
Optimal Cycle: 102 Level Of Service: C

Street Name:	Winchester Road - SR-79						Benton Road					
Approach:	North Bound			South Bound			East Bound			West Bound		
Movement:	L - T - R			L - T - R			L - T - R			L - T - R		
Control:	Protected			Protected			Protected			Protected		
Rights:	Include			Include			Include			Include		
Min. Green:	0	0	0	0	0	0	0	0	0	0	0	0
Lanes:	0 0	2	0 1	1 0	2	0 0	0 0	0	0 0	2 0	0	0 1
Volume Module:												
Base Vol:	0	1497	526	255	865	0	0	0	0	280	0	357
Growth Adj:	1.00	1.00	1.00	1.00	1.00	1.00	1.00	1.00	1.00	1.00	1.00	1.00
Initial Bse:	0	1497	526	255	865	0	0	0	0	280	0	357
User Adj:	1.00	1.00	1.00	1.00	1.00	1.00	1.00	1.00	1.00	1.00	1.00	1.00
PHF Adj:	1.00	1.00	1.00	1.00	1.00	1.00	1.00	1.00	1.00	1.00	1.00	1.00
PHF Volume:	0	1497	526	255	865	0	0	0	0	280	0	357
Reduct Vol:	0	0	0	0	0	0	0	0	0	0	0	0
Reduced Vol:	0	1497	526	255	865	0	0	0	0	280	0	357
PCE Adj:	1.00	1.00	1.00	1.00	1.00	1.00	1.00	1.00	1.00	1.00	1.00	1.00
MLF Adj:	1.00	1.00	1.00	1.00	1.00	1.00	1.00	1.00	1.00	1.00	1.00	1.00
FinalVolume:	0	1497	526	255	865	0	0	0	0	280	0	357
Saturation Flow Module:												
Sat/Lane:	1900	1900	1900	1900	1900	1900	1900	1900	1900	1900	1900	1900
Adjustment:	1.00	0.95	0.85	0.95	0.95	1.00	1.00	1.00	1.00	0.92	1.00	0.85
Lanes:	0.00	2.00	1.00	1.00	2.00	0.00	0.00	0.00	0.00	2.00	0.00	1.00
Final Sat.:	0	3610	1615	1805	3610	0	0	0	0	3502	0	1615
Capacity Analysis Module:												
Vol/Sat:	0.00	0.41	0.33	0.14	0.24	0.00	0.00	0.00	0.00	0.08	0.00	0.22
Crit Moves:		****		****								****
Green/Cycle:	0.00	0.53	0.53	0.18	0.72	0.00	0.00	0.00	0.00	0.28	0.00	0.28
Volume/Cap:	0.00	0.78	0.61	0.78	0.33	0.00	0.00	0.00	0.00	0.28	0.00	0.78
Delay/Veh:	0.0	20.6	17.4	50.1	5.4	0.0	0.0	0.0	0.0	28.0	0.0	41.0
User DelAdj:	1.00	1.00	1.00	1.00	1.00	1.00	1.00	1.00	1.00	1.00	1.00	1.00
AdjDel/Veh:	0.0	20.6	17.4	50.1	5.4	0.0	0.0	0.0	0.0	28.0	0.0	41.0
LOS by Move:	A	C	B	D	A	A	A	A	A	C	A	D
HCM2kAvgQ:	0	21	12	9	5	0	0	0	0	4	0	12

Note: Queue reported is the number of cars per lane.

City of Murrieta General Plan
Existing
PM Peak Hour

Level Of Service Computation Report
2000 HCM Operations Method (Base Volume Alternative)

Intersection #26 Winchester Road - SR-79 & Via Mira Mosa

Cycle (sec): 100 Critical Vol./Cap.(X): 0.738
Loss Time (sec): 0 (Y+R=4.0 sec) Average Delay (sec/veh): 14.4
Optimal Cycle: 87 Level Of Service: B

Street Name:	Winchester Road - SR-79						Via Mira Mosa					
Approach:	North Bound			South Bound			East Bound			West Bound		
Movement:	L -	T -	R	L -	T -	R	L -	T -	R	L -	T -	R
Control:	Protected			Protected			Protected			Protected		
Rights:	Include			Include			Include			Include		
Min. Green:	0	0	0	0	0	0	0	0	0	0	0	0
Lanes:	1 0	2 0	1	1 0	1 1	0	1 0	0 1	0	1 0	0 1	0
Volume Module:												
Base Vol:	24	1893	204	42	1069	55	58	11	27	304	16	86
Growth Adj:	1.00	1.00	1.00	1.00	1.00	1.00	1.00	1.00	1.00	1.00	1.00	1.00
Initial Bse:	24	1893	204	42	1069	55	58	11	27	304	16	86
User Adj:	1.00	1.00	1.00	1.00	1.00	1.00	1.00	1.00	1.00	1.00	1.00	1.00
PHF Adj:	1.00	1.00	1.00	1.00	1.00	1.00	1.00	1.00	1.00	1.00	1.00	1.00
PHF Volume:	24	1893	204	42	1069	55	58	11	27	304	16	86
Reduct Vol:	0	0	0	0	0	0	0	0	0	0	0	0
Reduced Vol:	24	1893	204	42	1069	55	58	11	27	304	16	86
PCE Adj:	1.00	1.00	1.00	1.00	1.00	1.00	1.00	1.00	1.00	1.00	1.00	1.00
MLF Adj:	1.00	1.00	1.00	1.00	1.00	1.00	1.00	1.00	1.00	1.00	1.00	1.00
FinalVolume:	24	1893	204	42	1069	55	58	11	27	304	16	86
Saturation Flow Module:												
Sat/Lane:	1900	1900	1900	1900	1900	1900	1900	1900	1900	1900	1900	1900
Adjustment:	0.95	0.95	0.85	0.95	0.94	0.94	0.95	0.89	0.89	0.95	0.87	0.87
Lanes:	1.00	2.00	1.00	1.00	1.90	0.10	1.00	0.29	0.71	1.00	0.16	0.84
Final Sat.:	1805	3610	1615	1805	3409	175	1805	491	1206	1805	260	1400
Capacity Analysis Module:												
Vol/Sat:	0.01	0.52	0.13	0.02	0.31	0.31	0.03	0.02	0.02	0.17	0.06	0.06
Crit Moves:		****		****				****		****		
Green/Cycle:	0.03	0.71	0.71	0.03	0.71	0.71	0.09	0.03	0.03	0.23	0.17	0.17
Volume/Cap:	0.44	0.74	0.18	0.74	0.44	0.44	0.36	0.74	0.74	0.74	0.36	0.36
Delay/Veh:	53.3	10.0	4.9	87.7	6.2	6.2	44.3	91.1	91.1	42.8	37.5	37.5
User DelAdj:	1.00	1.00	1.00	1.00	1.00	1.00	1.00	1.00	1.00	1.00	1.00	1.00
AdjDel/Veh:	53.3	10.0	4.9	87.7	6.2	6.2	44.3	91.1	91.1	42.8	37.5	37.5
LOS by Move:	D	B	A	F	A	A	D	F	F	D	D	D
HCM2kAvgQ:	1	20	2	3	8	8	2	3	3	10	3	3

Note: Queue reported is the number of cars per lane.

City of Murrieta General Plan
Existing
PM Peak Hour

Level Of Service Computation Report
2000 HCM Operations Method (Base Volume Alternative)

Intersection #27 Monroe Ave & Los Alamos

Cycle (sec): 100 Critical Vol./Cap.(X): 0.313
Loss Time (sec): 0 (Y+R=4.0 sec) Average Delay (sec/veh): 12.4
Optimal Cycle: 33 Level Of Service: B

Street Name:	Monroe Ave						Los Alamos					
Approach:	North Bound			South Bound			East Bound			West Bound		
Movement:	L -	T -	R	L -	T -	R	L -	T -	R	L -	T -	R
Control:	Protected			Protected			Protected			Protected		
Rights:	Include			Include			Include			Include		
Min. Green:	0	0	0	0	0	0	0	0	0	0	0	0
Lanes:	0 0	0 0	0	2 0	0 0	1	1 0	2 0	0	0 0	2 0	1
Volume Module:												
Base Vol:	0	0	0	179	0	83	167	946	0	0	447	134
Growth Adj:	1.00	1.00	1.00	1.00	1.00	1.00	1.00	1.00	1.00	1.00	1.00	1.00
Initial Bse:	0	0	0	179	0	83	167	946	0	0	447	134
User Adj:	1.00	1.00	1.00	1.00	1.00	1.00	1.00	1.00	1.00	1.00	1.00	1.00
PHF Adj:	1.00	1.00	1.00	1.00	1.00	1.00	1.00	1.00	1.00	1.00	1.00	1.00
PHF Volume:	0	0	0	179	0	83	167	946	0	0	447	134
Reduct Vol:	0	0	0	0	0	0	0	0	0	0	0	0
Reduced Vol:	0	0	0	179	0	83	167	946	0	0	447	134
PCE Adj:	1.00	1.00	1.00	1.00	1.00	1.00	1.00	1.00	1.00	1.00	1.00	1.00
MLF Adj:	1.00	1.00	1.00	1.00	1.00	1.00	1.00	1.00	1.00	1.00	1.00	1.00
FinalVolume:	0	0	0	179	0	83	167	946	0	0	447	134
Saturation Flow Module:												
Sat/Lane:	1900	1900	1900	1900	1900	1900	1900	1900	1900	1900	1900	1900
Adjustment:	1.00	1.00	1.00	0.92	1.00	0.85	0.95	0.95	1.00	1.00	0.95	0.85
Lanes:	0.00	0.00	0.00	2.00	0.00	1.00	1.00	2.00	0.00	0.00	2.00	1.00
Final Sat.:	0	0	0	3502	0	1615	1805	3610	0	0	3610	1615
Capacity Analysis Module:												
Vol/Sat:	0.00	0.00	0.00	0.05	0.00	0.05	0.09	0.26	0.00	0.00	0.12	0.08
Crit Moves:				****				****		****		
Green/Cycle:	0.00	0.00	0.00	0.16	0.00	0.16	0.36	0.84	0.00	0.00	0.48	0.48
Volume/Cap:	0.00	0.00	0.00	0.31	0.00	0.31	0.26	0.31	0.00	0.00	0.26	0.17
Delay/Veh:	0.0	0.0	0.0	37.2	0.0	37.6	22.9	1.9	0.0	0.0	15.6	14.9
User DelAdj:	1.00	1.00	1.00	1.00	1.00	1.00	1.00	1.00	1.00	1.00	1.00	1.00
AdjDel/Veh:	0.0	0.0	0.0	37.2	0.0	37.6	22.9	1.9	0.0	0.0	15.6	14.9
LOS by Move:	A	A	A	D	A	D	C	A	A	A	B	B
HCM2kAvgQ:	0	0	0	3	0	2	4	4	0	0	4	2

Note: Queue reported is the number of cars per lane.

City of Murrieta General Plan
Existing
PM Peak Hour

Level Of Service Computation Report
2000 HCM Operations Method (Base Volume Alternative)

Intersection #28 Jefferson Avenue & Murrieta Hot Springs Road

Cycle (sec): 100 Critical Vol./Cap.(X): 0.835
Loss Time (sec): 0 (Y+R=4.0 sec) Average Delay (sec/veh): 20.7
Optimal Cycle: 113 Level Of Service: C

Street Name:	Jefferson Avenue						Murrieta Hot Springs Road					
Approach:	North Bound			South Bound			East Bound			West Bound		
Movement:	L - T - R			L - T - R			L - T - R			L - T - R		
Control:	Protected			Protected			Permitted			Permitted		
Rights:	Include			Include			Include			Include		
Min. Green:	0	0	0	0	0	0	0	0	0	0	0	0
Lanes:	0 0	2	0 1	2 0	2	0 0	0 0	0	0 0	2 0	0	0 1
Volume Module:												
Base Vol:	0	965	976	275	329	0	0	0	0	289	0	246
Growth Adj:	1.00	1.00	1.00	1.00	1.00	1.00	1.00	1.00	1.00	1.00	1.00	1.00
Initial Bse:	0	965	976	275	329	0	0	0	0	289	0	246
User Adj:	1.00	1.00	1.00	1.00	1.00	1.00	1.00	1.00	1.00	1.00	1.00	1.00
PHF Adj:	1.00	1.00	1.00	1.00	1.00	1.00	1.00	1.00	1.00	1.00	1.00	1.00
PHF Volume:	0	965	976	275	329	0	0	0	0	289	0	246
Reduct Vol:	0	0	0	0	0	0	0	0	0	0	0	0
Reduced Vol:	0	965	976	275	329	0	0	0	0	289	0	246
PCE Adj:	1.00	1.00	1.00	1.00	1.00	1.00	1.00	1.00	1.00	1.00	1.00	1.00
MLF Adj:	1.00	1.00	1.00	1.00	1.00	1.00	1.00	1.00	1.00	1.00	1.00	1.00
FinalVolume:	0	965	976	275	329	0	0	0	0	289	0	246
Saturation Flow Module:												
Sat/Lane:	1900	1900	1900	1900	1900	1900	1900	1900	1900	1900	1900	1900
Adjustment:	1.00	0.95	0.85	0.92	0.95	1.00	1.00	1.00	1.00	0.61	1.00	0.85
Lanes:	0.00	2.00	1.00	2.00	2.00	0.00	0.00	0.00	0.00	2.00	0.00	1.00
Final Sat.:	0	3610	1615	3502	3610	0	0	0	0	2330	0	1615
Capacity Analysis Module:												
Vol/Sat:	0.00	0.27	0.60	0.08	0.09	0.00	0.00	0.00	0.00	0.12	0.00	0.15
Crit Moves:			****	****								****
Green/Cycle:	0.00	0.72	0.72	0.09	0.82	0.00	0.00	0.00	0.00	0.18	0.00	0.18
Volume/Cap:	0.00	0.37	0.84	0.84	0.11	0.00	0.00	0.00	0.00	0.68	0.00	0.84
Delay/Veh:	0.0	5.3	15.0	61.2	1.8	0.0	0.0	0.0	0.0	42.6	0.0	57.7
User DelAdj:	1.00	1.00	1.00	1.00	1.00	1.00	1.00	1.00	1.00	1.00	1.00	1.00
AdjDel/Veh:	0.0	5.3	15.0	61.2	1.8	0.0	0.0	0.0	0.0	42.6	0.0	57.7
LOS by Move:	A	A	B	E	A	A	A	A	A	D	A	E
HCM2kAvgQ:	0	6	23	7	1	0	0	0	0	6	0	10

Note: Queue reported is the number of cars per lane.

City of Murrieta General Plan
Existing
PM Peak Hour

Level Of Service Computation Report
2000 HCM Operations Method (Base Volume Alternative)

Intersection #29 Madison Avenue & Murrieta Hot Springs Road

Cycle (sec): 100 Critical Vol./Cap.(X): 0.741
Loss Time (sec): 0 (Y+R=4.0 sec) Average Delay (sec/veh): 34.2
Optimal Cycle: 88 Level Of Service: C

Street Name:	Madison Avenue						Murrieta Hot Springs Road					
Approach:	North Bound			South Bound			East Bound			West Bound		
Movement:	L - T - R			L - T - R			L - T - R			L - T - R		
Control:	Protected			Protected			Protected			Protected		
Rights:	Include			Include			Include			Include		
Min. Green:	0	0	0	0	0	0	0	0	0	0	0	0
Lanes:	2 0	2	0 1	2 0	1	1 0	2 0	3	1 0	2 0	3	0 1
Volume Module:												
Base Vol:	63	286	562	459	212	67	206	868	103	419	424	162
Growth Adj:	1.00	1.00	1.00	1.00	1.00	1.00	1.00	1.00	1.00	1.00	1.00	1.00
Initial Bse:	63	286	562	459	212	67	206	868	103	419	424	162
User Adj:	1.00	1.00	1.00	1.00	1.00	1.00	1.00	1.00	1.00	1.00	1.00	1.00
PHF Adj:	1.00	1.00	1.00	1.00	1.00	1.00	1.00	1.00	1.00	1.00	1.00	1.00
PHF Volume:	63	286	562	459	212	67	206	868	103	419	424	162
Reduct Vol:	0	0	0	0	0	0	0	0	0	0	0	0
Reduced Vol:	63	286	562	459	212	67	206	868	103	419	424	162
PCE Adj:	1.00	1.00	1.00	1.00	1.00	1.00	1.00	1.00	1.00	1.00	1.00	1.00
MLF Adj:	1.00	1.00	1.00	1.00	1.00	1.00	1.00	1.00	1.00	1.00	1.00	1.00
FinalVolume:	63	286	562	459	212	67	206	868	103	419	424	162
Saturation Flow Module:												
Sat/Lane:	1900	1900	1900	1900	1900	1900	1900	1900	1900	1900	1900	1900
Adjustment:	0.92	0.95	0.85	0.92	0.92	0.92	0.92	0.90	0.90	0.92	0.91	0.85
Lanes:	2.00	2.00	1.00	2.00	1.52	0.48	2.00	3.58	0.42	2.00	3.00	1.00
Final Sat.:	3502	3610	1615	3502	2644	836	3502	6083	722	3502	5187	1615
Capacity Analysis Module:												
Vol/Sat:	0.02	0.08	0.35	0.13	0.08	0.08	0.06	0.14	0.14	0.12	0.08	0.10
Crit Moves:			****	****				****		****		
Green/Cycle:	0.12	0.47	0.47	0.18	0.53	0.53	0.13	0.19	0.19	0.16	0.22	0.22
Volume/Cap:	0.15	0.17	0.74	0.74	0.15	0.15	0.45	0.74	0.74	0.74	0.37	0.45
Delay/Veh:	39.7	15.3	25.5	43.8	12.2	12.2	40.8	40.3	40.3	45.2	33.1	34.4
User DelAdj:	1.00	1.00	1.00	1.00	1.00	1.00	1.00	1.00	1.00	1.00	1.00	1.00
AdjDel/Veh:	39.7	15.3	25.5	43.8	12.2	12.2	40.8	40.3	40.3	45.2	33.1	34.4
LOS by Move:	D	B	C	D	B	B	D	D	D	D	C	C
HCM2kAvgQ:	1	3	15	9	2	2	4	9	9	8	4	5

Note: Queue reported is the number of cars per lane.

City of Murrieta General Plan
Existing
PM Peak Hour

Level Of Service Computation Report
2000 HCM Operations Method (Base Volume Alternative)

Intersection #30 I-15 SB Off-Ramp & Murrieta Hot Springs Road

Cycle (sec): 100 Critical Vol./Cap.(X): 0.657
Loss Time (sec): 0 (Y+R=4.0 sec) Average Delay (sec/veh): 18.9
Optimal Cycle: 54 Level Of Service: B

Street Name:	I-15 SB Off-Ramp						Murrieta Hot Springs Road					
Approach:	North Bound			South Bound			East Bound			West Bound		
Movement:	L	T	R	L	T	R	L	T	R	L	T	R
Control:	Permitted			Permitted			Protected			Protected		
Rights:	Include			Include			Ignore			Ignore		
Min. Green:	0	0	0	0	0	0	0	0	0	0	0	0
Lanes:	0 0	0	0	1 0	1! 0	1	0 0	3 0	1	0 0	3 0	1
Volume Module:												
Base Vol:	0	0	0	842	0	276	0	1599	366	0	1078	112
Growth Adj:	1.00	1.00	1.00	1.00	1.00	1.00	1.00	1.00	1.00	1.00	1.00	1.00
Initial Bse:	0	0	0	842	0	276	0	1599	366	0	1078	112
User Adj:	1.00	1.00	1.00	1.00	1.00	1.00	1.00	1.00	0.00	1.00	1.00	0.00
PHF Adj:	1.00	1.00	1.00	1.00	1.00	1.00	1.00	1.00	0.00	1.00	1.00	0.00
PHF Volume:	0	0	0	842	0	276	0	1599	0	0	1078	0
Reduct Vol:	0	0	0	0	0	0	0	0	0	0	0	0
Reduced Vol:	0	0	0	842	0	276	0	1599	0	0	1078	0
PCE Adj:	1.00	1.00	1.00	1.00	1.00	1.00	1.00	1.00	0.00	1.00	1.00	0.00
MLF Adj:	1.00	1.00	1.00	1.00	1.00	1.00	1.00	1.00	0.00	1.00	1.00	0.00
FinalVolume:	0	0	0	842	0	276	0	1599	0	0	1078	0
Saturation Flow Module:												
Sat/Lane:	1900	1900	1900	1900	1900	1900	1900	1900	1900	1900	1900	1900
Adjustment:	1.00	1.00	1.00	0.73	1.00	0.73	1.00	0.91	1.00	1.00	0.91	1.00
Lanes:	0.00	0.00	0.00	1.75	0.00	1.25	0.00	3.00	1.00	0.00	3.00	1.00
Final Sat.:	0	0	0	2415	0	1718	0	5187	1900	0	5187	1900
Capacity Analysis Module:												
Vol/Sat:	0.00	0.00	0.00	0.35	0.00	0.16	0.00	0.31	0.00	0.00	0.21	0.00
Crit Moves:				****				****		****		
Green/Cycle:	0.00	0.00	0.00	0.53	0.00	0.53	0.00	0.47	0.00	0.00	0.47	0.00
Volume/Cap:	0.00	0.00	0.00	0.66	0.00	0.30	0.00	0.66	0.00	0.00	0.44	0.00
Delay/Veh:	0.0	0.0	0.0	17.9	0.0	13.2	0.0	21.0	0.0	0.0	17.9	0.0
User DelAdj:	1.00	1.00	1.00	1.00	1.00	1.00	1.00	1.00	1.00	1.00	1.00	1.00
AdjDel/Veh:	0.0	0.0	0.0	17.9	0.0	13.2	0.0	21.0	0.0	0.0	17.9	0.0
LOS by Move:	A	A	A	B	A	B	A	C	A	A	B	A
HCM2kAvgQ:	0	0	0	11	0	4	0	14	0	0	8	0

Note: Queue reported is the number of cars per lane.

City of Murrieta General Plan
Existing
PM Peak Hour

Level Of Service Computation Report
2000 HCM Operations Method (Base Volume Alternative)

Intersection #31 I-15 NB Off-Ramp & Murrieta Hot Springs Road

Cycle (sec): 100 Critical Vol./Cap.(X): 0.544
Loss Time (sec): 0 (Y+R=4.0 sec) Average Delay (sec/veh): 15.3
Optimal Cycle: 50 Level Of Service: B

Street Name:	I-15 NB Off-Ramp						Murrieta Hot Springs Road					
Approach:	North Bound			South Bound			East Bound			West Bound		
Movement:	L	T	R	L	T	R	L	T	R	L	T	R
Control:	Protected			Protected			Protected			Protected		
Rights:	Include			Include			Include			Ignore		
Min. Green:	0	0	0	0	0	0	0	0	0	0	0	0
Lanes:	1 1	0	0 1	0 0	0	0 0	1 0	3	0 0	0 0	3	0 1
Volume Module:												
Base Vol:	275	0	180	0	0	0	485	1942	0	0	852	985
Growth Adj:	1.00	1.00	1.00	1.00	1.00	1.00	1.00	1.00	1.00	1.00	1.00	1.00
Initial Bse:	275	0	180	0	0	0	485	1942	0	0	852	985
User Adj:	1.00	1.00	1.00	1.00	1.00	1.00	1.00	1.00	1.00	1.00	1.00	0.00
PHF Adj:	1.00	1.00	1.00	1.00	1.00	1.00	1.00	1.00	1.00	1.00	1.00	0.00
PHF Volume:	275	0	180	0	0	0	485	1942	0	0	852	0
Reduct Vol:	0	0	0	0	0	0	0	0	0	0	0	0
Reduced Vol:	275	0	180	0	0	0	485	1942	0	0	852	0
PCE Adj:	1.00	1.00	1.00	1.00	1.00	1.00	1.00	1.00	1.00	1.00	1.00	0.00
MLF Adj:	1.00	1.00	1.00	1.00	1.00	1.00	1.00	1.00	1.00	1.00	1.00	0.00
FinalVolume:	275	0	180	0	0	0	485	1942	0	0	852	0
Saturation Flow Module:												
Sat/Lane:	1900	1900	1900	1900	1900	1900	1900	1900	1900	1900	1900	1900
Adjustment:	0.95	1.00	0.85	1.00	1.00	1.00	0.95	0.91	1.00	1.00	0.91	1.00
Lanes:	2.00	0.00	1.00	0.00	0.00	0.00	1.00	3.00	0.00	0.00	3.00	1.00
Final Sat.:	3618	0	1615	0	0	0	1805	5187	0	0	5187	1900
Capacity Analysis Module:												
Vol/Sat:	0.08	0.00	0.11	0.00	0.00	0.00	0.27	0.37	0.00	0.00	0.16	0.00
Crit Moves:			****				****				****	
Green/Cycle:	0.20	0.00	0.20	0.00	0.00	0.00	0.49	0.80	0.00	0.00	0.30	0.00
Volume/Cap:	0.37	0.00	0.54	0.00	0.00	0.00	0.54	0.47	0.00	0.00	0.54	0.00
Delay/Veh:	34.5	0.0	37.5	0.0	0.0	0.0	18.2	3.4	0.0	0.0	29.6	0.0
User DelAdj:	1.00	1.00	1.00	1.00	1.00	1.00	1.00	1.00	1.00	1.00	1.00	1.00
AdjDel/Veh:	34.5	0.0	37.5	0.0	0.0	0.0	18.2	3.4	0.0	0.0	29.6	0.0
LOS by Move:	C	A	D	A	A	A	B	A	A	A	C	A
HCM2kAvgQ:	4	0	6	0	0	0	10	7	0	0	8	0

Note: Queue reported is the number of cars per lane.

City of Murrieta General Plan
Existing
PM Peak Hour

Level Of Service Computation Report
2000 HCM Operations Method (Base Volume Alternative)

Intersection #32 I-215 SB Off-Ramp & Murrieta Hot Springs Road

Cycle (sec): 100 Critical Vol./Cap.(X): 0.659
Loss Time (sec): 0 (Y+R=4.0 sec) Average Delay (sec/veh): 14.5
Optimal Cycle: 42 Level Of Service: B

Street Name:	I-215 SB Off-Ramp						Murrieta Hot Springs Road					
Approach:	North Bound			South Bound			East Bound			West Bound		
Movement:	L -	T -	R	L -	T -	R	L -	T -	R	L -	T -	R
Control:	Permitted			Permitted			Permitted			Permitted		
Rights:	Include			Include			Ignore			Ignore		
Min. Green:	0	0	0	0	0	0	0	0	0	0	0	0
Lanes:	0 0	0 0	0	1 0	1! 0	1	0 0	3 0	1	0 0	3 0	1
Volume Module:												
Base Vol:	0	0	0	603	0	236	0	2103	139	0	1535	238
Growth Adj:	1.00	1.00	1.00	1.00	1.00	1.00	1.00	1.00	1.00	1.00	1.00	1.00
Initial Bse:	0	0	0	603	0	236	0	2103	139	0	1535	238
User Adj:	1.00	1.00	1.00	1.00	1.00	1.00	1.00	1.00	0.00	1.00	1.00	0.00
PHF Adj:	1.00	1.00	1.00	1.00	1.00	1.00	1.00	1.00	0.00	1.00	1.00	0.00
PHF Volume:	0	0	0	603	0	236	0	2103	0	0	1535	0
Reduct Vol:	0	0	0	0	0	0	0	0	0	0	0	0
Reduced Vol:	0	0	0	603	0	236	0	2103	0	0	1535	0
PCE Adj:	1.00	1.00	1.00	1.00	1.00	1.00	1.00	1.00	0.00	1.00	1.00	0.00
MLF Adj:	1.00	1.00	1.00	1.00	1.00	1.00	1.00	1.00	0.00	1.00	1.00	0.00
FinalVolume:	0	0	0	603	0	236	0	2103	0	0	1535	0
Saturation Flow Module:												
Sat/Lane:	1900	1900	1900	1900	1900	1900	1900	1900	1900	1900	1900	1900
Adjustment:	1.00	1.00	1.00	0.73	1.00	0.73	1.00	0.91	1.00	1.00	0.91	1.00
Lanes:	0.00	0.00	0.00	1.72	0.00	1.28	0.00	3.00	1.00	0.00	3.00	1.00
Final Sat.:	0	0	0	2381	0	1775	0	5187	1900	0	5187	1900
Capacity Analysis Module:												
Vol/Sat:	0.00	0.00	0.00	0.25	0.00	0.13	0.00	0.41	0.00	0.00	0.30	0.00
Crit Moves:				****				****				
Green/Cycle:	0.00	0.00	0.00	0.38	0.00	0.38	0.00	0.62	0.00	0.00	0.62	0.00
Volume/Cap:	0.00	0.00	0.00	0.66	0.00	0.35	0.00	0.66	0.00	0.00	0.48	0.00
Delay/Veh:	0.0	0.0	0.0	26.6	0.0	21.9	0.0	12.9	0.0	0.0	10.6	0.0
User DelAdj:	1.00	1.00	1.00	1.00	1.00	1.00	1.00	1.00	1.00	1.00	1.00	1.00
AdjDel/Veh:	0.0	0.0	0.0	26.6	0.0	21.9	0.0	12.9	0.0	0.0	10.6	0.0
LOS by Move:	A	A	A	C	A	C	A	B	A	A	B	A
HCM2kAvgQ:	0	0	0	10	0	4	0	16	0	0	9	0

Note: Queue reported is the number of cars per lane.

City of Murrieta General Plan
Existing
PM Peak Hour

Level Of Service Computation Report
2000 HCM Operations Method (Base Volume Alternative)

Intersection #33 I-215 NB Off-Ramp & Murrieta Hot Springs Road

Cycle (sec): 100 Critical Vol./Cap.(X): 0.618
Loss Time (sec): 0 (Y+R=4.0 sec) Average Delay (sec/veh): 10.0
Optimal Cycle: 38 Level Of Service: A

Street Name:	I-215 NB Off-Ramp						Murrieta Hot Springs Road					
Approach:	North Bound			South Bound			East Bound			West Bound		
Movement:	L -	T -	R	L -	T -	R	L -	T -	R	L -	T -	R
Control:	Permitted			Permitted			Permitted			Permitted		
Rights:	Include			Include			Ignore			Ignore		
Min. Green:	0	0	0	0	0	0	0	0	0	0	0	0
Lanes:	2 0	0 0	2	0 0	0 0	0	0 0	3 0	1	0 0	3 0	1
Volume Module:												
Base Vol:	77	0	496	0	0	0	0	2300	104	0	1748	571
Growth Adj:	1.00	1.00	1.00	1.00	1.00	1.00	1.00	1.00	1.00	1.00	1.00	1.00
Initial Bse:	77	0	496	0	0	0	0	2300	104	0	1748	571
User Adj:	1.00	1.00	1.00	1.00	1.00	1.00	1.00	1.00	0.00	1.00	1.00	0.00
PHF Adj:	1.00	1.00	1.00	1.00	1.00	1.00	1.00	1.00	0.00	1.00	1.00	0.00
PHF Volume:	77	0	496	0	0	0	0	2300	0	0	1748	0
Reduct Vol:	0	0	0	0	0	0	0	0	0	0	0	0
Reduced Vol:	77	0	496	0	0	0	0	2300	0	0	1748	0
PCE Adj:	1.00	1.00	1.00	1.00	1.00	1.00	1.00	1.00	0.00	1.00	1.00	0.00
MLF Adj:	1.00	1.00	1.00	1.00	1.00	1.00	1.00	1.00	0.00	1.00	1.00	0.00
FinalVolume:	77	0	496	0	0	0	0	2300	0	0	1748	0
Saturation Flow Module:												
Sat/Lane:	1900	1900	1900	1900	1900	1900	1900	1900	1900	1900	1900	1900
Adjustment:	0.67	1.00	0.75	1.00	1.00	1.00	1.00	0.91	1.00	1.00	0.91	1.00
Lanes:	2.00	0.00	2.00	0.00	0.00	0.00	0.00	3.00	1.00	0.00	3.00	1.00
Final Sat.:	2547	0	2842	0	0	0	0	5187	1900	0	5187	1900
Capacity Analysis Module:												
Vol/Sat:	0.03	0.00	0.17	0.00	0.00	0.00	0.00	0.44	0.00	0.00	0.34	0.00
Crit Moves:			****					****				
Green/Cycle:	0.28	0.00	0.28	0.00	0.00	0.00	0.00	0.72	0.00	0.00	0.72	0.00
Volume/Cap:	0.11	0.00	0.62	0.00	0.00	0.00	0.00	0.62	0.00	0.00	0.47	0.00
Delay/Veh:	26.6	0.0	32.7	0.0	0.0	0.0	0.0	7.5	0.0	0.0	6.1	0.0
User DelAdj:	1.00	1.00	1.00	1.00	1.00	1.00	1.00	1.00	1.00	1.00	1.00	1.00
AdjDel/Veh:	26.6	0.0	32.7	0.0	0.0	0.0	0.0	7.5	0.0	0.0	6.1	0.0
LOS by Move:	C	A	C	A	A	A	A	A	A	A	A	A
HCM2kAvgQ:	1	0	8	0	0	0	0	13	0	0	8	0

Note: Queue reported is the number of cars per lane.

City of Murrieta General Plan
Existing
PM Peak Hour

Level Of Service Computation Report
2000 HCM Operations Method (Base Volume Alternative)

Intersection #34 Jackson Avenue & Murrieta Hot Springs Road

Cycle (sec): 100 Critical Vol./Cap.(X): 0.494
Loss Time (sec): 0 (Y+R=4.0 sec) Average Delay (sec/veh): 6.2
Optimal Cycle: 37 Level Of Service: A

Street Name:	Jackson Avenue									Murrieta Hot Springs Road								
Approach:	North Bound				South Bound				East Bound				West Bound					
Movement:	L	-	T	-	R	L	-	T	-	R	L	-	T	-	R	L	-	T	-	R
Control:	Permitted					Permitted					Protected					Protected				
Rights:	Include					Include					Include					Include				
Min. Green:	0	0	0			0	0	0			0	0	0			0	0	0		
Lanes:	2	0	0	0	2	0	0	0	0	0	0	0	3	0	1	1	0	3	0	0
Volume Module:																				
Base Vol:	90		0	111		0		0		0		0	1968		43	136		1577		0
Growth Adj:	1.00	1.00		1.00	1.00	1.00		1.00	1.00		1.00	1.00	1.00		1.00	1.00	1.00	1.00		1.00
Initial Bse:	90		0	111		0		0		0		0	1968		43	136		1577		0
User Adj:	1.00	1.00		1.00	1.00	1.00		1.00	1.00		1.00	1.00	1.00		1.00	1.00	1.00	1.00		1.00
PHF Adj:	1.00	1.00		1.00	1.00	1.00		1.00	1.00		1.00	1.00	1.00		1.00	1.00	1.00	1.00		1.00
PHF Volume:	90		0	111		0		0		0		0	1968		43	136		1577		0
Reduct Vol:	0		0	0		0		0		0		0	0		0	0		0		0
Reduced Vol:	90		0	111		0		0		0		0	1968		43	136		1577		0
PCE Adj:	1.00	1.00		1.00	1.00	1.00		1.00	1.00		1.00	1.00	1.00		1.00	1.00	1.00	1.00		1.00
MLF Adj:	1.00	1.00		1.00	1.00	1.00		1.00	1.00		1.00	1.00	1.00		1.00	1.00	1.00	1.00		1.00
FinalVolume:	90		0	111		0		0		0		0	1968		43	136		1577		0
Saturation Flow Module:																				
Sat/Lane:	1900	1900		1900	1900	1900		1900	1900		1900	1900	1900		1900	1900	1900	1900		1900
Adjustment:	0.74	1.00		0.75	1.00	1.00		1.00	0.91		0.85	0.95	0.91		1.00	1.00				
Lanes:	2.00	0.00		2.00	0.00	0.00		0.00	3.00		1.00	1.00	3.00		0.00					
Final Sat.:	2809		0	2842		0		0		0		0	5187		1615	1805		5187		0
Capacity Analysis Module:																				
Vol/Sat:	0.03	0.00		0.04	0.00	0.00		0.00	0.00		0.38	0.03	0.08		0.30	0.00				
Crit Moves:				****							****		****							
Green/Cycle:	0.08	0.00		0.08	0.00	0.00		0.00	0.00		0.77	0.77	0.15		0.92	0.00				
Volume/Cap:	0.41	0.00		0.49	0.00	0.00		0.00	0.00		0.49	0.03	0.49		0.33	0.00				
Delay/Veh:	45.0	0.0		45.8	0.0	0.0		0.0	0.0		4.4	2.8	40.2		0.5	0.0				
User DelAdj:	1.00	1.00		1.00	1.00	1.00		1.00	1.00		1.00	1.00	1.00		1.00	1.00				
AdjDel/Veh:	45.0	0.0		45.8	0.0	0.0		0.0	0.0		4.4	2.8	40.2		0.5	0.0				
LOS by Move:	D	A		D	A	A		A	A		A	A	D		A	A				
HCM2kAvgQ:	2	0		3	0	0		0	0		8	0	4		2	0				

Note: Queue reported is the number of cars per lane.

City of Murrieta General Plan
Existing
PM Peak Hour

Level Of Service Computation Report
2000 HCM Operations Method (Base Volume Alternative)

Intersection #35 Margarita Road & Murrieta Hot Springs Road

Cycle (sec): 100 Critical Vol./Cap.(X): 0.798
Loss Time (sec): 0 (Y+R=4.0 sec) Average Delay (sec/veh): 23.7
Optimal Cycle: 113 Level Of Service: C

Street Name:	Margarita Road									Murrieta Hot Springs Road								
Approach:	North Bound				South Bound				East Bound				West Bound					
Movement:	L	-	T	-	R	L	-	T	-	R	L	-	T	-	R	L	-	T	-	R
Control:	Protected					Protected					Protected					Protected				
Rights:	Include					Include					Include					Include				
Min. Green:	0	0	0			0	0	0			0	0	0			0	0	0		
Lanes:	2	0	1	0	1	0	1	0	0	1	1	0	2	0	1	1	0	2	1	0
Volume Module:																				
Base Vol:	879		20	225		20		15		26		18	1241		687	186		973		7
Growth Adj:	1.00	1.00		1.00	1.00	1.00		1.00	1.00		1.00	1.00	1.00		1.00	1.00	1.00	1.00		1.00
Initial Bse:	879		20	225		20		15		26		18	1241		687	186		973		7
User Adj:	1.00	1.00		1.00	1.00	1.00		1.00	1.00		1.00	1.00	1.00		1.00	1.00	1.00	1.00		1.00
PHF Adj:	1.00	1.00		1.00	1.00	1.00		1.00	1.00		1.00	1.00	1.00		1.00	1.00	1.00	1.00		1.00
PHF Volume:	879		20	225		20		15		26		18	1241		687	186		973		7
Reduct Vol:	0		0	0		0		0		0		0	0		0	0		0		0
Reduced Vol:	879		20	225		20		15		26		18	1241		687	186		973		7
PCE Adj:	1.00	1.00		1.00	1.00	1.00		1.00	1.00		1.00	1.00	1.00		1.00	1.00	1.00	1.00		1.00
MLF Adj:	1.00	1.00		1.00	1.00	1.00		1.00	1.00		1.00	1.00	1.00		1.00	1.00	1.00	1.00		1.00
FinalVolume:	879		20	225		20		15		26		18	1241		687	186		973		7
Saturation Flow Module:																				
Sat/Lane:	1900	1900		1900	1900	1900		1900	1900		1900	1900	1900		1900	1900	1900	1900		1900
Adjustment:	0.92	1.00		0.85	0.97	0.97		0.85	0.95		0.95	0.85	0.95		0.91	0.91				
Lanes:	2.00	1.00		1.00	0.57	0.43		1.00	1.00		2.00	1.00	1.00		2.98	0.02				
Final Sat.:	3502	1900		1615	1055	791		1615	1805		3610	1615	1805		5145	37				
Capacity Analysis Module:																				
Vol/Sat:	0.25	0.01		0.14	0.02	0.02		0.02	0.01		0.34	0.43	0.10		0.19	0.19				
Crit Moves:	****					****						****	****							
Green/Cycle:	0.31	0.30		0.30	0.04	0.02		0.02	0.03		0.53	0.53	0.13		0.63	0.63				
Volume/Cap:	0.80	0.04		0.47	0.47	0.80		0.68	0.30		0.65	0.80	0.80		0.30	0.30				
Delay/Veh:	35.6	25.0		29.4	51.5	113		87.8	50.0		17.4	24.3	59.7		8.6	8.6				
User DelAdj:	1.00	1.00		1.00	1.00	1.00		1.00	1.00		1.00	1.00	1.00		1.00	1.00				
AdjDel/Veh:	35.6	25.0		29.4	51.5	113		87.8	50.0		17.4	24.3	59.7		8.6	8.6				
LOS by Move:	D	C		C	D	F		F	D		B	C	E		A	A				
HCM2kAvgQ:	15	0		6	2	3		2	1		15	19	8		5	5				

Note: Queue reported is the number of cars per lane.

City of Murrieta General Plan
Existing
PM Peak Hour

Level Of Service Computation Report
2000 HCM Operations Method (Base Volume Alternative)

Intersection #37 Jefferson Avenue & Guava Street

Cycle (sec): 100 Critical Vol./Cap.(X): 0.573
Loss Time (sec): 0 (Y+R=4.0 sec) Average Delay (sec/veh): 1.4
Optimal Cycle: 44 Level Of Service: A

Street Name:	Jefferson Avenue												Guava Street											
Approach:	North Bound						South Bound						East Bound						West Bound					
Movement:	L	-	T	-	R		L	-	T	-	R		L	-	T	-	R		L	-	T	-	R	
Control:	Protected						Protected						Permitted						Permitted					
Rights:	Include						Include						Include						Include					
Min. Green:	0	0	0				0	0	0				0	0	0				0	0	0			
Lanes:	1	0	2	0	1		1	0	1	1	0		1	0	0	1	0		1	0	1	0	1	
Volume Module:																								
Base Vol:	0	1995		75		16	560		0		0		0		0		9		0		19			
Growth Adj:	1.00	1.00		1.00		1.00	1.00		1.00		1.00		1.00		1.00		1.00		1.00		1.00			
Initial Bse:	0	1995		75		16	560		0		0		0		0		9		0		19			
User Adj:	1.00	1.00		1.00		1.00	1.00		1.00		1.00		1.00		1.00		1.00		1.00		1.00			
PHF Adj:	1.00	1.00		1.00		1.00	1.00		1.00		1.00		1.00		1.00		1.00		1.00		1.00			
PHF Volume:	0	1995		75		16	560		0		0		0		0		9		0		19			
Reduct Vol:	0	0		0		0	0		0		0		0		0		0		0		0			
Reduced Vol:	0	1995		75		16	560		0		0		0		0		9		0		19			
PCE Adj:	1.00	1.00		1.00		1.00	1.00		1.00		1.00		1.00		1.00		1.00		1.00		1.00			
MLF Adj:	1.00	1.00		1.00		1.00	1.00		1.00		1.00		1.00		1.00		1.00		1.00		1.00			
FinalVolume:	0	1995		75		16	560		0		0		0		0		9		0		19			
Saturation Flow Module:																								
Sat/Lane:	1900	1900		1900		1900	1900		1900		1900		1900		1900		1900		1900		1900			
Adjustment:	1.00	0.95		0.85		0.95	0.95		0.95		0.95		1.00		1.00		1.00		1.00		0.85			
Lanes:	1.00	2.00		1.00		1.00	2.00		0.00		1.00		1.00		0.00		1.00		1.00		1.00			
Final Sat.:	1900	3610		1615		1805	3610		0		1900		1900		0		1900		1900		1615			
Capacity Analysis Module:																								
Vol/Sat:	0.00	0.55		0.05		0.01	0.16		0.00		0.00		0.00		0.00		0.00		0.00		0.01			
Crit Moves:		****				****															****			
Green/Cycle:	0.00	0.96		0.96		0.02	0.98		0.00		0.00		0.00		0.00		0.02		0.00		0.02			
Volume/Cap:	0.00	0.57		0.05		0.57	0.16		0.00		0.00		0.00		0.00		0.13		0.00		0.57			
Delay/Veh:	0.0	0.4		0.1		74.7	0.0		0.0		0.0		0.0		0.0		48.9		0.0		70.6			
User DelAdj:	1.00	1.00		1.00		1.00	1.00		1.00		1.00		1.00		1.00		1.00		1.00		1.00			
AdjDel/Veh:	0.0	0.4		0.1		74.7	0.0		0.0		0.0		0.0		0.0		48.9		0.0		70.6			
LOS by Move:	A	A		A		E	A		A		A		A		A		D		A		E			
HCM2kAvgQ:	0	4		0		1	0		0		0		0		0		0		0		1			

Note: Queue reported is the number of cars per lane.

City of Murrieta General Plan
Existing
PM Peak Hour

Level Of Service Computation Report
2000 HCM Unsignalized Method (Base Volume Alternative)

Intersection #38 Jefferson Avenue & Cherry Street

Average Delay (sec/veh): 0.7 Worst Case Level Of Service: C[15.0]

Street Name:	Jefferson Avenue												Cherry Street											
Approach:	North Bound						South Bound						East Bound						West Bound					
Movement:	L	-	T	-	R		L	-	T	-	R		L	-	T	-	R		L	-	T	-	R	
Control:	Uncontrolled						Uncontrolled						Stop Sign						Stop Sign					
Rights:	Include						Include						Include						Include					
Lanes:	1	0	2	0	0		0	0	1	1	0		0	0	1!	0	0		0	0	0	0	0	
Volume Module:																								
Base Vol:	55	1372		0		0	880		9		4		0		76		0		0		0			
Growth Adj:	1.00	1.00		1.00		1.00	1.00		1.00		1.00		1.00		1.00		1.00		1.00		1.00			
Initial Bse:	55	1372		0		0	880		9		4		0		76		0		0		0			
User Adj:	1.00	1.00		1.00		1.00	1.00		1.00		1.00		1.00		1.00		1.00		1.00		1.00			
PHF Adj:	1.00	1.00		1.00		1.00	1.00		1.00		1.00		1.00		1.00		1.00		1.00		1.00			
PHF Volume:	55	1372		0		0	880		9		4		0		76		0		0		0			
Reduct Vol:	0	0		0		0	0		0		0		0		0		0		0		0			
FinalVolume:	55	1372		0		0	880		9		4		0		76		0		0		0			
Critical Gap Module:																								
Critical Gp:	4.1	xxxx	xxxxx	xxxxx	xxxx	xxxxx					6.8		6.5		6.9	xxxxx	xxxx	xxxxx						
FollowUpTim:	2.2	xxxx	xxxxx	xxxxx	xxxx	xxxxx					3.5		4.0		3.3	xxxxx	xxxx	xxxxx						
Capacity Module:																								
Cnflict Vol:	889	xxxx	xxxxx	xxxx	xxxx	xxxxx					1681		2367		445	xxxx	xxxx	xxxxx						
Potent Cap.:	771	xxxx	xxxxx	xxxx	xxxx	xxxxx					87		36		567	xxxx	xxxx	xxxxx						
Move Cap.:	771	xxxx	xxxxx	xxxx	xxxx	xxxxx					83		33		567	xxxx	xxxx	xxxxx						
Volume/Cap:	0.07	xxxx	xxxx	xxxx	xxxx	xxxx					0.05		0.00		0.13	xxxx	xxxx	xxxx						
Level Of Service Module:																								
2Way95thQ:	0.2	xxxx	xxxxx	xxxx	xxxx	xxxxx					xxxx	xxxx	xxxxx				xxxx	xxxx	xxxxx					
Control Del:	10.0	xxxx	xxxxx	xxxxx	xxxx	xxxxx					xxxxx	xxxx	xxxxx				xxxxx	xxxx	xxxxx					
LOS by Move:	B	*		*		*		*		*		*		C		*		*		*		*		
Movement:	LT - LTR - RT						LT - LTR - RT						LT - LTR - RT						LT - LTR - RT					
Shared Cap.:	xxxx	xxxx	xxxxx	xxxx	xxxx	xxxxx					xxxx		438	xxxxx		xxxx	xxxx	xxxxx						
SharedQueue:	xxxxx	xxxx	xxxxx	xxxxx	xxxx	xxxxx					xxxxx		0.7	xxxxx		xxxxx	xxxx	xxxxx						
Shrd ConDel:	xxxxx	xxxx	xxxxx	xxxxx	xxxx	xxxxx					xxxxx		15.0	xxxxx		xxxxx	xxxx	xxxxx						
Shared LOS:	*	*		*		*	*		*		*		C		*		*		*		*			
ApproachDel:	xxxxxx						xxxxxx						15.0				xxxxxx							
ApproachLOS:	*						*						C				*							

Note: Queue reported is the number of cars per lane.

City of Murrieta General Plan
Existing
PM Peak Hour

Level Of Service Computation Report
2000 HCM Operations Method (Base Volume Alternative)

Intersection #39 Washington Ave & Calle Del Oso Oro/Nutmeg

Cycle (sec): 100 Critical Vol./Cap.(X): 0.508
Loss Time (sec): 0 (Y+R=4.0 sec) Average Delay (sec/veh): 26.8
Optimal Cycle: 46 Level Of Service: C

Street Name:	Washington Ave						Calle Del Oso Oro/Nutmeg					
Approach:	North Bound			South Bound			East Bound			West Bound		
Movement:	L - T - R			L - T - R			L - T - R			L - T - R		
Control:	Protected			Protected			Protected			Protected		
Rights:	Include			Include			Include			Include		
Min. Green:	0	0	0	0	0	0	0	0	0	0	0	0
Lanes:	1 0	1 0	1	1 0	1 1	0	1 0	1 0	1	1 0	1 0	1
Volume Module:												
Base Vol:	327	319	113	64	278	35	20	121	275	124	258	89
Growth Adj:	1.00	1.00	1.00	1.00	1.00	1.00	1.00	1.00	1.00	1.00	1.00	1.00
Initial Bse:	327	319	113	64	278	35	20	121	275	124	258	89
User Adj:	1.00	1.00	1.00	1.00	1.00	1.00	1.00	1.00	1.00	1.00	1.00	1.00
PHF Adj:	1.00	1.00	1.00	1.00	1.00	1.00	1.00	1.00	1.00	1.00	1.00	1.00
PHF Volume:	327	319	113	64	278	35	20	121	275	124	258	89
Reduct Vol:	0	0	0	0	0	0	0	0	0	0	0	0
Reduced Vol:	327	319	113	64	278	35	20	121	275	124	258	89
PCE Adj:	1.00	1.00	1.00	1.00	1.00	1.00	1.00	1.00	1.00	1.00	1.00	1.00
MLF Adj:	1.00	1.00	1.00	1.00	1.00	1.00	1.00	1.00	1.00	1.00	1.00	1.00
FinalVolume:	327	319	113	64	278	35	20	121	275	124	258	89
Saturation Flow Module:												
Sat/Lane:	1900	1900	1900	1900	1900	1900	1900	1900	1900	1900	1900	1900
Adjustment:	0.95	1.00	0.85	0.95	0.93	0.93	0.95	1.00	0.85	0.95	1.00	0.85
Lanes:	1.00	1.00	1.00	1.00	1.78	0.22	1.00	1.00	1.00	1.00	1.00	1.00
Final Sat.:	1805	1900	1615	1805	3152	397	1805	1900	1615	1805	1900	1615
Capacity Analysis Module:												
Vol/Sat:	0.18	0.17	0.07	0.04	0.09	0.09	0.01	0.06	0.17	0.07	0.14	0.06
Crit Moves:	****				****				****	****		
Green/Cycle:	0.36	0.44	0.44	0.09	0.17	0.17	0.04	0.33	0.33	0.14	0.43	0.43
Volume/Cap:	0.51	0.38	0.16	0.38	0.51	0.51	0.31	0.19	0.51	0.51	0.31	0.13
Delay/Veh:	26.0	19.3	17.1	44.2	38.2	38.2	49.8	23.8	27.5	41.9	18.7	17.0
User DelAdj:	1.00	1.00	1.00	1.00	1.00	1.00	1.00	1.00	1.00	1.00	1.00	1.00
AdjDel/Veh:	26.0	19.3	17.1	44.2	38.2	38.2	49.8	23.8	27.5	41.9	18.7	17.0
LOS by Move:	C	B	B	D	D	D	D	C	C	D	B	B
HCM2kAvgQ:	8	7	2	2	5	5	1	3	7	4	5	2

Note: Queue reported is the number of cars per lane.

City of Murrieta General Plan
Existing
PM Peak Hour

Level Of Service Computation Report
2000 HCM Operations Method (Base Volume Alternative)

Intersection #40 Clinton Keith Rd & Calle de Oso Oro/Bear Creek Dr

Cycle (sec): 100 Critical Vol./Cap.(X): 0.183
Loss Time (sec): 0 (Y+R=4.0 sec) Average Delay (sec/veh): 16.2
Optimal Cycle: 23 Level Of Service: B

Street Name:	Clinton Keith Rd						Calle de Oso Oro/Bear Creek Dr					
Approach:	North Bound			South Bound			East Bound			West Bound		
Movement:	L - T - R			L - T - R			L - T - R			L - T - R		
Control:	Protected			Protected			Permitted			Permitted		
Rights:	Include			Include			Include			Include		
Min. Green:	0	0	0	0	0	0	0	0	0	0	0	0
Lanes:	1 0	1 1	0	1 0	1 1	0	1 0	0 1	0	1 0	1 1	0
Volume Module:												
Base Vol:	1	255	35	83	233	105	67	22	3	75	37	53
Growth Adj:	1.00	1.00	1.00	1.00	1.00	1.00	1.00	1.00	1.00	1.00	1.00	1.00
Initial Bse:	1	255	35	83	233	105	67	22	3	75	37	53
User Adj:	1.00	1.00	1.00	1.00	1.00	1.00	1.00	1.00	1.00	1.00	1.00	1.00
PHF Adj:	1.00	1.00	1.00	1.00	1.00	1.00	1.00	1.00	1.00	1.00	1.00	1.00
PHF Volume:	1	255	35	83	233	105	67	22	3	75	37	53
Reduct Vol:	0	0	0	0	0	0	0	0	0	0	0	0
Reduced Vol:	1	255	35	83	233	105	67	22	3	75	37	53
PCE Adj:	1.00	1.00	1.00	1.00	1.00	1.00	1.00	1.00	1.00	1.00	1.00	1.00
MLF Adj:	1.00	1.00	1.00	1.00	1.00	1.00	1.00	1.00	1.00	1.00	1.00	1.00
FinalVolume:	1	255	35	83	233	105	67	22	3	75	37	53
Saturation Flow Module:												
Sat/Lane:	1900	1900	1900	1900	1900	1900	1900	1900	1900	1900	1900	1900
Adjustment:	0.95	0.93	0.93	0.95	0.91	0.91	0.66	0.98	0.98	0.72	0.87	0.87
Lanes:	1.00	1.76	0.24	1.00	1.38	0.62	1.00	0.88	0.12	1.00	1.00	1.00
Final Sat.:	1805	3117	428	1805	2372	1069	1245	1642	224	1370	1646	1646
Capacity Analysis Module:												
Vol/Sat:	0.00	0.08	0.08	0.05	0.10	0.10	0.05	0.01	0.01	0.05	0.02	0.03
Crit Moves:		****		****						****		
Green/Cycle:	0.00	0.45	0.45	0.25	0.70	0.70	0.30	0.30	0.30	0.30	0.30	0.30
Volume/Cap:	0.14	0.18	0.18	0.18	0.14	0.14	0.18	0.04	0.04	0.18	0.07	0.11
Delay/Veh:	58.6	16.6	16.6	29.5	5.1	5.1	26.1	24.9	24.9	26.1	25.1	25.4
User DelAdj:	1.00	1.00	1.00	1.00	1.00	1.00	1.00	1.00	1.00	1.00	1.00	1.00
AdjDel/Veh:	58.6	16.6	16.6	29.5	5.1	5.1	26.1	24.9	24.9	26.1	25.1	25.4
LOS by Move:	E	B	B	C	A	A	C	C	C	C	C	C
HCM2kAvgQ:	0	3	3	2	2	2	2	1	1	2	1	1

Note: Queue reported is the number of cars per lane.

City of Murrieta General Plan
Existing
PM Peak Hour

Level Of Service Computation Report
2000 HCM 4-Way Stop Method (Base Volume Alternative)

Intersection #41 Jefferson Ave & Nutmeg St

Cycle (sec): 100 Critical Vol./Cap.(X): 0.480
Loss Time (sec): 0 (Y+R=4.0 sec) Average Delay (sec/veh): 12.9
Optimal Cycle: 0 Level Of Service: B

Street Name:	Jefferson Ave						Nutmeg St					
Approach:	North Bound			South Bound			East Bound			West Bound		
Movement:	L - T - R			L - T - R			L - T - R			L - T - R		
Control:	Stop Sign			Stop Sign			Stop Sign			Stop Sign		
Rights:	Include			Include			Include			Include		
Min. Green:	0	0	0	0	0	0	0	0	0	0	0	0
Lanes:	1 0	0	1 0	1 0	0	1 0	1 0	1	0	1 0	1	0
Volume Module:												
Base Vol:	221	84	195	14	44	9	11	179	94	125	227	29
Growth Adj:	1.00	1.00	1.00	1.00	1.00	1.00	1.00	1.00	1.00	1.00	1.00	1.00
Initial Bse:	221	84	195	14	44	9	11	179	94	125	227	29
User Adj:	1.00	1.00	1.00	1.00	1.00	1.00	1.00	1.00	1.00	1.00	1.00	1.00
PHF Adj:	1.00	1.00	1.00	1.00	1.00	1.00	1.00	1.00	1.00	1.00	1.00	1.00
PHF Volume:	221	84	195	14	44	9	11	179	94	125	227	29
Reduct Vol:	0	0	0	0	0	0	0	0	0	0	0	0
Reduced Vol:	221	84	195	14	44	9	11	179	94	125	227	29
PCE Adj:	1.00	1.00	1.00	1.00	1.00	1.00	1.00	1.00	1.00	1.00	1.00	1.00
MLF Adj:	1.00	1.00	1.00	1.00	1.00	1.00	1.00	1.00	1.00	1.00	1.00	1.00
FinalVolume:	221	84	195	14	44	9	11	179	94	125	227	29
Saturation Flow Module:												
Adjustment:	1.00	1.00	1.00	1.00	1.00	1.00	1.00	1.00	1.00	1.00	1.00	1.00
Lanes:	1.00	0.30	0.70	1.00	0.83	0.17	1.00	1.31	0.69	1.00	1.77	0.23
Final Sat.:	500	175	406	434	390	80	443	634	350	462	883	114
Capacity Analysis Module:												
Vol/Sat:	0.44	0.48	0.48	0.03	0.11	0.11	0.02	0.28	0.27	0.27	0.26	0.25
Crit Moves:		****			****			****		****		
Delay/Veh:	14.9	13.8	13.8	10.6	10.6	10.6	10.6	12.4	11.7	12.8	11.9	11.7
Delay Adj:	1.00	1.00	1.00	1.00	1.00	1.00	1.00	1.00	1.00	1.00	1.00	1.00
AdjDel/Veh:	14.9	13.8	13.8	10.6	10.6	10.6	10.6	12.4	11.7	12.8	11.9	11.7
LOS by Move:	B	B	B	B	B	B	B	B	B	B	B	B
ApproachDel:	14.3			10.6			12.1			12.2		
Delay Adj:	1.00			1.00			1.00			1.00		
ApprAdjDel:	14.3			10.6			12.1			12.2		
LOS by Appr:	B			B			B			B		
AllWayAvgQ:	0.7	0.8	0.8	0.0	0.1	0.1	0.0	0.4	0.3	0.3	0.3	0.3

Note: Queue reported is the number of cars per lane.

City of Murrieta General Plan
Existing
PM Peak Hour

Level Of Service Computation Report
2000 HCM 4-Way Stop Method (Base Volume Alternative)

Intersection #42 Jefferson Ave & Magnolia St

Cycle (sec): 100 Critical Vol./Cap.(X): 0.841
Loss Time (sec): 0 (Y+R=4.0 sec) Average Delay (sec/veh): 21.2
Optimal Cycle: 0 Level Of Service: C

Street Name:	Jefferson Ave						Magnolia St					
Approach:	North Bound			South Bound			East Bound			West Bound		
Movement:	L - T - R			L - T - R			L - T - R			L - T - R		
Control:	Stop Sign			Stop Sign			Stop Sign			Stop Sign		
Rights:	Include			Include			Include			Include		
Min. Green:	0	0	0	0	0	0	0	0	0	0	0	0
Lanes:	0 1	0	0 1	0 0	1!	0 0	0 0	1!	0 0	0 0	1!	0 0
Volume Module:												
Base Vol:	96	480	9	4	264	38	67	7	33	5	7	7
Growth Adj:	1.00	1.00	1.00	1.00	1.00	1.00	1.00	1.00	1.00	1.00	1.00	1.00
Initial Bse:	96	480	9	4	264	38	67	7	33	5	7	7
User Adj:	1.00	1.00	1.00	1.00	1.00	1.00	1.00	1.00	1.00	1.00	1.00	1.00
PHF Adj:	1.00	1.00	1.00	1.00	1.00	1.00	1.00	1.00	1.00	1.00	1.00	1.00
PHF Volume:	96	480	9	4	264	38	67	7	33	5	7	7
Reduct Vol:	0	0	0	0	0	0	0	0	0	0	0	0
Reduced Vol:	96	480	9	4	264	38	67	7	33	5	7	7
PCE Adj:	1.00	1.00	1.00	1.00	1.00	1.00	1.00	1.00	1.00	1.00	1.00	1.00
MLF Adj:	1.00	1.00	1.00	1.00	1.00	1.00	1.00	1.00	1.00	1.00	1.00	1.00
FinalVolume:	96	480	9	4	264	38	67	7	33	5	7	7
Saturation Flow Module:												
Adjustment:	1.00	1.00	1.00	1.00	1.00	1.00	1.00	1.00	1.00	1.00	1.00	1.00
Lanes:	0.17	0.83	1.00	0.01	0.87	0.12	0.63	0.06	0.31	0.26	0.37	0.37
Final Sat.:	114	571	805	9	603	87	351	37	173	141	197	197
Capacity Analysis Module:												
Vol/Sat:	0.84	0.84	0.01	0.44	0.44	0.44	0.19	0.19	0.19	0.04	0.04	0.04
Crit Moves:		****				****	****					****
Delay/Veh:	28.8	28.8	7.2	11.7	11.7	11.7	10.2	10.2	10.2	9.3	9.3	9.3
Delay Adj:	1.00	1.00	1.00	1.00	1.00	1.00	1.00	1.00	1.00	1.00	1.00	1.00
AdjDel/Veh:	28.8	28.8	7.2	11.7	11.7	11.7	10.2	10.2	10.2	9.3	9.3	9.3
LOS by Move:	D	D	A	B	B	B	B	B	B	A	A	A
ApproachDel:	28.5			11.7			10.2			9.3		
Delay Adj:	1.00			1.00			1.00			1.00		
ApprAdjDel:	28.5			11.7			10.2			9.3		
LOS by Appr:	D			B			B			A		
AllWayAvgQ:	4.0	4.0	0.0	0.7	0.7	0.7	0.2	0.2	0.2	0.0	0.0	0.0

Note: Queue reported is the number of cars per lane.

City of Murrieta General Plan
Existing
PM Peak Hour

Level Of Service Computation Report
2000 HCM Operations Method (Base Volume Alternative)

Intersection #43 Jefferson Ave & Lemon St

Cycle (sec): 100 Critical Vol./Cap.(X): 0.353
Loss Time (sec): 0 (Y+R=4.0 sec) Average Delay (sec/veh): 6.6
Optimal Cycle: 29 Level Of Service: A

Street Name:	Jefferson Ave						Lemon St					
Approach:	North Bound			South Bound			East Bound			West Bound		
Movement:	L - T - R			L - T - R			L - T - R			L - T - R		
Control:	Protected			Protected			Permitted			Permitted		
Rights:	Include			Include			Include			Include		
Min. Green:	0	0	0	0	0	0	0	0	0	0	0	0
Lanes:	1 0	1 0	1	1 0	1 0	1	0 0	1! 0	0	0 0	1! 0	0
Volume Module:												
Base Vol:	78	616	1	2	324	6	7	0	37	4	4	4
Growth Adj:	1.00	1.00	1.00	1.00	1.00	1.00	1.00	1.00	1.00	1.00	1.00	1.00
Initial Bse:	78	616	1	2	324	6	7	0	37	4	4	4
User Adj:	1.00	1.00	1.00	1.00	1.00	1.00	1.00	1.00	1.00	1.00	1.00	1.00
PHF Adj:	1.00	1.00	1.00	1.00	1.00	1.00	1.00	1.00	1.00	1.00	1.00	1.00
PHF Volume:	78	616	1	2	324	6	7	0	37	4	4	4
Reduct Vol:	0	0	0	0	0	0	0	0	0	0	0	0
Reduced Vol:	78	616	1	2	324	6	7	0	37	4	4	4
PCE Adj:	1.00	1.00	1.00	1.00	1.00	1.00	1.00	1.00	1.00	1.00	1.00	1.00
MLF Adj:	1.00	1.00	1.00	1.00	1.00	1.00	1.00	1.00	1.00	1.00	1.00	1.00
FinalVolume:	78	616	1	2	324	6	7	0	37	4	4	4
Saturation Flow Module:												
Sat/Lane:	1900	1900	1900	1900	1900	1900	1900	1900	1900	1900	1900	1900
Adjustment:	0.95	1.00	0.85	0.95	1.00	0.85	0.85	1.00	0.85	0.90	0.90	0.90
Lanes:	1.00	1.00	1.00	1.00	1.00	1.00	0.16	0.00	0.84	0.34	0.33	0.33
Final Sat.:	1805	1900	1615	1805	1900	1615	257	0	1359	572	572	572
Capacity Analysis Module:												
Vol/Sat:	0.04	0.32	0.00	0.00	0.17	0.00	0.03	0.00	0.03	0.01	0.01	0.01
Crit Moves:		****		****			****					
Green/Cycle:	0.19	0.92	0.92	0.00	0.74	0.74	0.08	0.00	0.08	0.08	0.08	0.08
Volume/Cap:	0.23	0.35	0.00	0.35	0.23	0.01	0.35	0.00	0.35	0.09	0.09	0.09
Delay/Veh:	34.9	0.6	0.3	83.8	4.3	3.5	45.5	0.0	45.5	43.2	43.2	43.2
User DelAdj:	1.00	1.00	1.00	1.00	1.00	1.00	1.00	1.00	1.00	1.00	1.00	1.00
AdjDel/Veh:	34.9	0.6	0.3	83.8	4.3	3.5	45.5	0.0	45.5	43.2	43.2	43.2
LOS by Move:	C	A	A	F	A	A	D	A	D	D	D	D
HCM2kAvgQ:	2	3	0	0	3	0	2	0	2	0	0	0

Note: Queue reported is the number of cars per lane.

City of Murrieta General Plan
Existing
PM Peak Hour

Level Of Service Computation Report
2000 HCM Operations Method (Base Volume Alternative)

Intersection #44 Jefferson Ave & Kalmia St

Cycle (sec): 100 Critical Vol./Cap.(X): 0.517
Loss Time (sec): 0 (Y+R=4.0 sec) Average Delay (sec/veh): 26.7
Optimal Cycle: 47 Level Of Service: C

Street Name:	Jefferson Ave						Kalmia St					
Approach:	North Bound			South Bound			East Bound			West Bound		
Movement:	L - T - R			L - T - R			L - T - R			L - T - R		
Control:	Protected			Protected			Protected			Protected		
Rights:	Include			Include			Include			Include		
Min. Green:	0	0	0	0	0	0	0	0	0	0	0	0
Lanes:	1 0	1 0	1	1 0	1 1	0	1 0	2 0	1	1 0	1 0	1
Volume Module:												
Base Vol:	191	326	233	168	186	11	20	515	198	128	458	298
Growth Adj:	1.00	1.00	1.00	1.00	1.00	1.00	1.00	1.00	1.00	1.00	1.00	1.00
Initial Bse:	191	326	233	168	186	11	20	515	198	128	458	298
User Adj:	1.00	1.00	1.00	1.00	1.00	1.00	1.00	1.00	1.00	1.00	1.00	1.00
PHF Adj:	1.00	1.00	1.00	1.00	1.00	1.00	1.00	1.00	1.00	1.00	1.00	1.00
PHF Volume:	191	326	233	168	186	11	20	515	198	128	458	298
Reduct Vol:	0	0	0	0	0	0	0	0	0	0	0	0
Reduced Vol:	191	326	233	168	186	11	20	515	198	128	458	298
PCE Adj:	1.00	1.00	1.00	1.00	1.00	1.00	1.00	1.00	1.00	1.00	1.00	1.00
MLF Adj:	1.00	1.00	1.00	1.00	1.00	1.00	1.00	1.00	1.00	1.00	1.00	1.00
FinalVolume:	191	326	233	168	186	11	20	515	198	128	458	298
Saturation Flow Module:												
Sat/Lane:	1900	1900	1900	1900	1900	1900	1900	1900	1900	1900	1900	1900
Adjustment:	0.95	1.00	0.85	0.95	0.94	0.94	0.95	0.95	0.85	0.95	1.00	0.85
Lanes:	1.00	1.00	1.00	1.00	1.89	0.11	1.00	2.00	1.00	1.00	1.00	1.00
Final Sat.:	1805	1900	1615	1805	3381	200	1805	3610	1615	1805	1900	1615
Capacity Analysis Module:												
Vol/Sat:	0.11	0.17	0.14	0.09	0.06	0.06	0.01	0.14	0.12	0.07	0.24	0.18
Crit Moves:		****		****			****				****	
Green/Cycle:	0.34	0.33	0.33	0.18	0.18	0.18	0.02	0.33	0.33	0.16	0.47	0.47
Volume/Cap:	0.31	0.52	0.43	0.52	0.31	0.31	0.52	0.44	0.38	0.44	0.52	0.40
Delay/Veh:	24.9	27.7	26.6	38.5	36.3	36.3	60.1	26.8	26.3	38.8	19.3	17.8
User DelAdj:	1.00	1.00	1.00	1.00	1.00	1.00	1.00	1.00	1.00	1.00	1.00	1.00
AdjDel/Veh:	24.9	27.7	26.6	38.5	36.3	36.3	60.1	26.8	26.3	38.8	19.3	17.8
LOS by Move:	C	C	C	D	D	D	E	C	C	D	B	B
HCM2kAvgQ:	4	8	6	5	3	3	1	7	5	4	10	6

Note: Queue reported is the number of cars per lane.

City of Murrieta General Plan
Existing
PM Peak Hour

Level Of Service Computation Report
2000 HCM Operations Method (Base Volume Alternative)

Intersection #45 Jefferson Ave & Juniper St

Cycle (sec): 100 Critical Vol./Cap.(X): 0.285
Loss Time (sec): 0 (Y+R=4.0 sec) Average Delay (sec/veh): 13.8
Optimal Cycle: 32 Level Of Service: B

Street Name:	Jefferson Ave						Juniper St					
Approach:	North Bound			South Bound			East Bound			West Bound		
Movement:	L - T - R			L - T - R			L - T - R			L - T - R		
Control:	Protected			Protected			Protected			Protected		
Rights:	Include			Include			Include			Include		
Min. Green:	0	0	0	0	0	0	0	0	0	0	0	0
Lanes:	1 0	2 0	1	1 0	2 0	1	1 0	1 1	0	1 0	1 1	0
Volume Module:												
Base Vol:	61	738	74	47	392	28	48	53	55	10	47	45
Growth Adj:	1.00	1.00	1.00	1.00	1.00	1.00	1.00	1.00	1.00	1.00	1.00	1.00
Initial Bse:	61	738	74	47	392	28	48	53	55	10	47	45
User Adj:	1.00	1.00	1.00	1.00	1.00	1.00	1.00	1.00	1.00	1.00	1.00	1.00
PHF Adj:	1.00	1.00	1.00	1.00	1.00	1.00	1.00	1.00	1.00	1.00	1.00	1.00
PHF Volume:	61	738	74	47	392	28	48	53	55	10	47	45
Reduct Vol:	0	0	0	0	0	0	0	0	0	0	0	0
Reduced Vol:	61	738	74	47	392	28	48	53	55	10	47	45
PCE Adj:	1.00	1.00	1.00	1.00	1.00	1.00	1.00	1.00	1.00	1.00	1.00	1.00
MLF Adj:	1.00	1.00	1.00	1.00	1.00	1.00	1.00	1.00	1.00	1.00	1.00	1.00
FinalVolume:	61	738	74	47	392	28	48	53	55	10	47	45
Saturation Flow Module:												
Sat/Lane:	1900	1900	1900	1900	1900	1900	1900	1900	1900	1900	1900	1900
Adjustment:	0.95	0.95	0.85	0.95	0.95	0.85	0.95	0.88	0.88	0.95	0.88	0.88
Lanes:	1.00	2.00	1.00	1.00	2.00	1.00	1.00	1.00	1.00	1.00	1.02	0.98
Final Sat.:	1805	3610	1615	1805	3610	1615	1805	1668	1668	1805	1710	1637
Capacity Analysis Module:												
Vol/Sat:	0.03	0.20	0.05	0.03	0.11	0.02	0.03	0.03	0.03	0.01	0.03	0.03
Crit Moves:		****		****			****				****	
Green/Cycle:	0.19	0.72	0.72	0.09	0.62	0.62	0.09	0.16	0.16	0.03	0.10	0.10
Volume/Cap:	0.18	0.28	0.06	0.28	0.18	0.03	0.28	0.20	0.20	0.20	0.28	0.28
Delay/Veh:	34.0	5.0	4.2	43.3	8.2	7.4	43.1	36.4	36.4	49.6	42.4	42.4
User DelAdj:	1.00	1.00	1.00	1.00	1.00	1.00	1.00	1.00	1.00	1.00	1.00	1.00
AdjDel/Veh:	34.0	5.0	4.2	43.3	8.2	7.4	43.1	36.4	36.4	49.6	42.4	42.4
LOS by Move:	C	A	A	D	A	A	D	D	D	D	D	D
HCM2kAvgQ:	2	4	1	2	3	0	2	2	2	1	2	2

Note: Queue reported is the number of cars per lane.

City of Murrieta General Plan
Existing
PM Peak Hour

Level Of Service Computation Report
2000 HCM Operations Method (Base Volume Alternative)

Intersection #46 Jefferson Ave & Ivy St/Los Alamos Rd

Cycle (sec): 100 Critical Vol./Cap.(X): 0.494
Loss Time (sec): 0 (Y+R=4.0 sec) Average Delay (sec/veh): 25.2
Optimal Cycle: 45 Level Of Service: C

Street Name:	Jefferson Ave						Ivy St/Los Alamos Rd					
Approach:	North Bound			South Bound			East Bound			West Bound		
Movement:	L - T - R			L - T - R			L - T - R			L - T - R		
Control:	Protected			Protected			Protected			Protected		
Rights:	Include			Include			Include			Include		
Min. Green:	0	0	0	0	0	0	0	0	0	0	0	0
Lanes:	1 0	2 0	1	1 0	2 0	1	1 0	1 1	0	1 0	1 0	1
Volume Module:												
Base Vol:	180	627	402	148	297	36	44	245	129	98	161	132
Growth Adj:	1.00	1.00	1.00	1.00	1.00	1.00	1.00	1.00	1.00	1.00	1.00	1.00
Initial Bse:	180	627	402	148	297	36	44	245	129	98	161	132
User Adj:	1.00	1.00	1.00	1.00	1.00	1.00	1.00	1.00	1.00	1.00	1.00	1.00
PHF Adj:	1.00	1.00	1.00	1.00	1.00	1.00	1.00	1.00	1.00	1.00	1.00	1.00
PHF Volume:	180	627	402	148	297	36	44	245	129	98	161	132
Reduct Vol:	0	0	0	0	0	0	0	0	0	0	0	0
Reduced Vol:	180	627	402	148	297	36	44	245	129	98	161	132
PCE Adj:	1.00	1.00	1.00	1.00	1.00	1.00	1.00	1.00	1.00	1.00	1.00	1.00
MLF Adj:	1.00	1.00	1.00	1.00	1.00	1.00	1.00	1.00	1.00	1.00	1.00	1.00
FinalVolume:	180	627	402	148	297	36	44	245	129	98	161	132
Saturation Flow Module:												
Sat/Lane:	1900	1900	1900	1900	1900	1900	1900	1900	1900	1900	1900	1900
Adjustment:	0.95	0.95	0.85	0.95	0.95	0.85	0.95	0.90	0.90	0.95	1.00	0.85
Lanes:	1.00	2.00	1.00	1.00	2.00	1.00	1.00	1.31	0.69	1.00	1.00	1.00
Final Sat.:	1805	3610	1615	1805	3610	1615	1805	2242	1180	1805	1900	1615
Capacity Analysis Module:												
Vol/Sat:	0.10	0.17	0.25	0.08	0.08	0.02	0.02	0.11	0.11	0.05	0.08	0.08
Crit Moves:			****	****				****		****		
Green/Cycle:	0.37	0.50	0.50	0.17	0.30	0.30	0.07	0.22	0.22	0.11	0.26	0.26
Volume/Cap:	0.27	0.35	0.49	0.49	0.27	0.07	0.33	0.49	0.49	0.49	0.33	0.32
Delay/Veh:	22.5	15.0	16.9	39.2	26.6	24.9	45.4	34.6	34.6	43.8	30.6	30.5
User DelAdj:	1.00	1.00	1.00	1.00	1.00	1.00	1.00	1.00	1.00	1.00	1.00	1.00
AdjDel/Veh:	22.5	15.0	16.9	39.2	26.6	24.9	45.4	34.6	34.6	43.8	30.6	30.5
LOS by Move:	C	B	B	D	C	C	D	C	C	D	C	C
HCM2kAvgQ:	4	6	8	5	4	1	2	6	6	3	4	3

Note: Queue reported is the number of cars per lane.

City of Murrieta General Plan
Existing
PM Peak Hour

Level Of Service Computation Report
2000 HCM Operations Method (Base Volume Alternative)

Intersection #47 Madison Ave & Kalmia St

Cycle (sec): 100 Critical Vol./Cap.(X): 0.491
Loss Time (sec): 0 (Y+R=4.0 sec) Average Delay (sec/veh): 20.3
Optimal Cycle: 45 Level Of Service: C

Street Name:	Madison Ave									Kalmia St					
Approach:	North Bound			South Bound			East Bound			West Bound					
Movement:	L	- T	- R	L	- T	- R	L	- T	- R	L	- T	- R			
Control:	Protected			Protected			Protected			Protected					
Rights:	Include			Include			Include			Include					
Min. Green:	0	0	0	0	0	0	0	0	0	0	0	0			
Lanes:	1	0	1! 0	1	0	0	0	0	0	0	3	0	1	2	0	2	0	0
Volume Module:															
Base Vol:	190	0	537	0	0	0	0	1020	172	383	952	0			
Growth Adj:	1.00	1.00	1.00	1.00	1.00	1.00	1.00	1.00	1.00	1.00	1.00	1.00			
Initial Bse:	190	0	537	0	0	0	0	1020	172	383	952	0			
User Adj:	1.00	1.00	1.00	1.00	1.00	1.00	1.00	1.00	1.00	1.00	1.00	1.00			
PHF Adj:	1.00	1.00	1.00	1.00	1.00	1.00	1.00	1.00	1.00	1.00	1.00	1.00			
PHF Volume:	190	0	537	0	0	0	0	1020	172	383	952	0			
Reduct Vol:	0	0	0	0	0	0	0	0	0	0	0	0			
Reduced Vol:	190	0	537	0	0	0	0	1020	172	383	952	0			
PCE Adj:	1.00	1.00	1.00	1.00	1.00	1.00	1.00	1.00	1.00	1.00	1.00	1.00			
MLF Adj:	1.00	1.00	1.00	1.00	1.00	1.00	1.00	1.00	1.00	1.00	1.00	1.00			
FinalVolume:	190	0	537	0	0	0	0	1020	172	383	952	0			
Saturation Flow Module:															
Sat/Lane:	1900	1900	1900	1900	1900	1900	1900	1900	1900	1900	1900	1900			
Adjustment:	0.88	1.00	0.88	1.00	1.00	1.00	1.00	0.91	0.85	0.92	0.95	1.00			
Lanes:	1.26	0.00	1.74	0.00	0.00	0.00	0.00	3.00	1.00	2.00	2.00	0.00			
Final Sat.:	2103	0	2899	0	0	0	0	5187	1615	3502	3610	0			
Capacity Analysis Module:															
Vol/Sat:	0.09	0.00	0.19	0.00	0.00	0.00	0.00	0.20	0.11	0.11	0.26	0.00			
Crit Moves:			****					****		****					
Green/Cycle:	0.38	0.00	0.38	0.00	0.00	0.00	0.00	0.40	0.40	0.22	0.62	0.00			
Volume/Cap:	0.24	0.00	0.49	0.00	0.00	0.00	0.00	0.49	0.27	0.49	0.42	0.00			
Delay/Veh:	21.4	0.0	24.1	0.0	0.0	0.0	0.0	22.6	20.3	34.4	9.8	0.0			
User DelAdj:	1.00	1.00	1.00	1.00	1.00	1.00	1.00	1.00	1.00	1.00	1.00	1.00			
AdjDel/Veh:	21.4	0.0	24.1	0.0	0.0	0.0	0.0	22.6	20.3	34.4	9.8	0.0			
LOS by Move:	C	A	C	A	A	A	A	C	C	C	A	A			
HCM2kAvgQ:	3	0	8	0	0	0	0	9	4	6	8	0			

Note: Queue reported is the number of cars per lane.

City of Murrieta General Plan
Existing
PM Peak Hour

Level Of Service Computation Report
2000 HCM Operations Method (Base Volume Alternative)

Intersection #48 Madison Ave/I-15 SB Ramps & Kalmia St

Cycle (sec): 100 Critical Vol./Cap.(X): 0.639
Loss Time (sec): 0 (Y+R=4.0 sec) Average Delay (sec/veh): 21.0
Optimal Cycle: 63 Level Of Service: C

Street Name:	Madison Ave/I-15 SB Ramps									Kalmia St					
Approach:	North Bound			South Bound			East Bound			West Bound					
Movement:	L	- T	- R	L	- T	- R	L	- T	- R	L	- T	- R			
Control:	Protected			Protected			Protected			Protected					
Rights:	Include			Include			Include			Include					
Min. Green:	0	0	0	0	0	0	0	0	0	0	0	0			
Lanes:	0	0	0	0	0	1	0	0	1	0	0	0	2	0	1	2	0	2	0	0
Volume Module:															
Base Vol:	0	0	0	359	2	361	0	1109	408	385	987	0			
Growth Adj:	1.00	1.00	1.00	1.00	1.00	1.00	1.00	1.00	1.00	1.00	1.00	1.00			
Initial Bse:	0	0	0	359	2	361	0	1109	408	385	987	0			
User Adj:	1.00	1.00	1.00	1.00	1.00	1.00	1.00	1.00	1.00	1.00	1.00	1.00			
PHF Adj:	1.00	1.00	1.00	1.00	1.00	1.00	1.00	1.00	1.00	1.00	1.00	1.00			
PHF Volume:	0	0	0	359	2	361	0	1109	408	385	987	0			
Reduct Vol:	0	0	0	0	0	0	0	0	0	0	0	0			
Reduced Vol:	0	0	0	359	2	361	0	1109	408	385	987	0			
PCE Adj:	1.00	1.00	1.00	1.00	1.00	1.00	1.00	1.00	1.00	1.00	1.00	1.00			
MLF Adj:	1.00	1.00	1.00	1.00	1.00	1.00	1.00	1.00	1.00	1.00	1.00	1.00			
FinalVolume:	0	0	0	359	2	361	0	1109	408	385	987	0			
Saturation Flow Module:															
Sat/Lane:	1900	1900	1900	1900	1900	1900	1900	1900	1900	1900	1900	1900			
Adjustment:	1.00	1.00	1.00	0.85	0.85	0.85	1.00	0.95	0.85	0.92	0.95	1.00			
Lanes:	0.00	0.00	0.00	1.00	0.01	0.99	0.00	2.00	1.00	2.00	2.00	0.00			
Final Sat.:	0	0	0	1615	9	1608	0	3610	1615	3502	3610	0			
Capacity Analysis Module:															
Vol/Sat:	0.00	0.00	0.00	0.22	0.22	0.22	0.00	0.31	0.25	0.11	0.27	0.00			
Crit Moves:				****				****		****					
Green/Cycle:	0.00	0.00	0.00	0.35	0.35	0.35	0.00	0.48	0.48	0.17	0.65	0.00			
Volume/Cap:	0.00	0.00	0.00	0.64	0.65	0.65	0.00	0.64	0.53	0.64	0.42	0.00			
Delay/Veh:	0.0	0.0	0.0	29.8	30.0	30.0	0.0	20.3	18.7	40.8	8.4	0.0			
User DelAdj:	1.00	1.00	1.00	1.00	1.00	1.00	1.00	1.00	1.00	1.00	1.00	1.00			
AdjDel/Veh:	0.0	0.0	0.0	29.8	30.0	30.0	0.0	20.3	18.7	40.8	8.4	0.0			
LOS by Move:	A	A	A	C	C	C	A	C	B	D	A	A			
HCM2kAvgQ:	0	0	0	10	10	10	0	14	9	7	8	0			

Note: Queue reported is the number of cars per lane.

City of Murrieta General Plan
Existing
PM Peak Hour

Level Of Service Computation Report
2000 HCM Unsignalized Method (Base Volume Alternative)

Intersection #49 Monroe Ave & Murrieta Hot Springs Rd

Average Delay (sec/veh): 1.8 Worst Case Level Of Service: C[23.8]

Street Name:	Monroe Ave								Murrieta Hot Springs Rd							
Approach:	North Bound				South Bound				East Bound				West Bound			
Movement:	L	-	T	-	R	L	-	T	-	R	L	-	T	-	R	L	-	T	-	R
Control:	Stop Sign					Stop Sign					Uncontrolled					Uncontrolled				
Rights:	Include					Include					Include					Include				
Lanes:	0	0	0	0	0	0	0	0	0	1	1	0	4	0	0	0	0	3	0	1
Volume Module:																				
Base Vol:	0	0	0	0	0	130	227	2111	0	0	1574	30								
Growth Adj:	1.00	1.00	1.00	1.00	1.00	1.00	1.00	1.00	1.00	1.00	1.00	1.00								
Initial Bse:	0	0	0	0	0	130	227	2111	0	0	1574	30								
User Adj:	1.00	1.00	1.00	1.00	1.00	1.00	1.00	1.00	1.00	1.00	1.00	1.00								
PHF Adj:	1.00	1.00	1.00	1.00	1.00	1.00	1.00	1.00	1.00	1.00	1.00	1.00								
PHF Volume:	0	0	0	0	0	130	227	2111	0	0	1574	30								
Reduct Vol:	0	0	0	0	0	0	0	0	0	0	0	0								
FinalVolume:	0	0	0	0	0	130	227	2111	0	0	1574	30								
Critical Gap Module:																				
Critical Gp:	xxxxx	xxxx	xxxxx	xxxxx	xxxx	6.9	4.1	xxxx	xxxxx	xxxxx	xxxx	xxxxx								
FollowUpTim:	xxxxx	xxxx	xxxxx	xxxxx	xxxx	3.3	2.2	xxxx	xxxxx	xxxxx	xxxx	xxxxx								
Capacity Module:																				
Cnflict Vol:	xxxx	xxxx	xxxxx	xxxx	xxxx	525	1604	xxxx	xxxxx	xxxx	xxxx	xxxxx								
Potent Cap.:	xxxx	xxxx	xxxxx	xxxx	xxxx	503	413	xxxx	xxxxx	xxxx	xxxx	xxxxx								
Move Cap.:	xxxx	xxxx	xxxxx	xxxx	xxxx	503	413	xxxx	xxxxx	xxxx	xxxx	xxxxx								
Volume/Cap:	xxxx	xxxx	xxxx	xxxx	xxxx	0.26	0.55	xxxx	xxxx	xxxx	xxxx	xxxx								
Level Of Service Module:																				
2Way95thQ:	xxxx	xxxx	xxxxx	xxxx	xxxx	1.0	3.2	xxxx	xxxxx	xxxx	xxxx	xxxxx								
Control Del:	xxxxx	xxxx	xxxxx	xxxxx	xxxx	14.6	23.8	xxxx	xxxxx	xxxxx	xxxx	xxxxx								
LOS by Move:	*	*	*	*	*	B	C	*	*	*	*	*								
Movement:	LT - LTR - RT					LT - LTR - RT					LT - LTR - RT					LT - LTR - RT				
Shared Cap.:	xxxx	xxxx	xxxxx	xxxx	xxxx	xxxxx	xxxx	xxxx	xxxxx	xxxx	xxxx	xxxxx								
SharedQueue:	xxxxx	xxxx	xxxxx	xxxxx	xxxx	xxxxx	xxxxx	xxxx	xxxxx	xxxxx	xxxx	xxxxx								
Shrd ConDel:	xxxxx	xxxx	xxxxx	xxxxx	xxxx	xxxxx	xxxxx	xxxx	xxxxx	xxxxx	xxxx	xxxxx								
Shared LOS:	*	*	*	*	*	*	*	*	*	*	*	*								
ApproachDel:	xxxxxx				14.6		xxxxxx				xxxxxx									
ApproachLOS:	*				B		*				*									

Note: Queue reported is the number of cars per lane.

City of Murrieta General Plan
Existing
PM Peak Hour

Level Of Service Computation Report
2000 HCM Operations Method (Base Volume Alternative)

Intersection #50 Hancock Ave & Murrieta Hot Springs Rd

Cycle (sec): 100 Critical Vol./Cap.(X): 0.513
Loss Time (sec): 0 (Y+R=4.0 sec) Average Delay (sec/veh): 14.7
Optimal Cycle: 47 Level Of Service: B

Street Name:	Hancock Ave								Murrieta Hot Springs Rd							
Approach:	North Bound				South Bound				East Bound				West Bound			
Movement:	L	-	T	-	R	L	-	T	-	R	L	-	T	-	R	L	-	T	-	R
Control:	Protected					Protected					Protected					Protected				
Rights:	Include					Include					Include					Include				
Min. Green:	0	0	0	0	0	0	0	0	0	0	0	0	0	0	0	0	0	0	0	0
Lanes:	0	0	0	0	0	2	0	0	0	2	2	0	4	0	0	0	0	3	0	1
Volume Module:																				
Base Vol:	0	0	0	569	0	183	237	1924	0	0	1465	421								
Growth Adj:	1.00	1.00	1.00	1.00	1.00	1.00	1.00	1.00	1.00	1.00	1.00	1.00								
Initial Bse:	0	0	0	569	0	183	237	1924	0	0	1465	421								
User Adj:	1.00	1.00	1.00	1.00	1.00	1.00	1.00	1.00	1.00	1.00	1.00	1.00								
PHF Adj:	1.00	1.00	1.00	1.00	1.00	1.00	1.00	1.00	1.00	1.00	1.00	1.00								
PHF Volume:	0	0	0	569	0	183	237	1924	0	0	1465	421								
Reduct Vol:	0	0	0	0	0	0	0	0	0	0	0	0								
Reduced Vol:	0	0	0	569	0	183	237	1924	0	0	1465	421								
PCE Adj:	1.00	1.00	1.00	1.00	1.00	1.00	1.00	1.00	1.00	1.00	1.00	1.00								
MLF Adj:	1.00	1.00	1.00	1.00	1.00	1.00	1.00	1.00	1.00	1.00	1.00	1.00								
FinalVolume:	0	0	0	569	0	183	237	1924	0	0	1465	421								
Saturation Flow Module:																				
Sat/Lane:	1900	1900	1900	1900	1900	1900	1900	1900	1900	1900	1900	1900								
Adjustment:	1.00	1.00	1.00	0.92	1.00	0.75	0.92	0.91	1.00	1.00	0.91	0.85								
Lanes:	0.00	0.00	0.00	2.00	0.00	2.00	2.00	4.00	0.00	0.00	3.00	1.00								
Final Sat.:	0	0	0	3502	0	2842	3502	6916	0	0	5187	1615								
Capacity Analysis Module:																				
Vol/Sat:	0.00	0.00	0.00	0.16	0.00	0.06	0.07	0.28	0.00	0.00	0.28	0.26								
Crit Moves:				****			****				****									
Green/Cycle:	0.00	0.00	0.00	0.32	0.00	0.32	0.13	0.68	0.00	0.00	0.55	0.55								
Volume/Cap:	0.00	0.00	0.00	0.51	0.00	0.20	0.51	0.41	0.00	0.00	0.51	0.47								
Delay/Veh:	0.0	0.0	0.0	28.3	0.0	25.0	41.4	7.0	0.0	0.0	14.2	14.0								
User DelAdj:	1.00	1.00	1.00	1.00	1.00	1.00	1.00	1.00	1.00	1.00	1.00	1.00								
AdjDel/Veh:	0.0	0.0	0.0	28.3	0.0	25.0	41.4	7.0	0.0	0.0	14.2	14.0								
LOS by Move:	A	A	A	C	A	C	D	A	A	A	B	B								
HCM2kAvgQ:	0	0	0	8	0	2	4	7	0	0	10	8								

Note: Queue reported is the number of cars per lane.

City of Murrieta General Plan
Existing
PM Peak Hour

Level Of Service Computation Report
2000 HCM Operations Method (Base Volume Alternative)

Intersection #51 Alta Murrieta Dr & Murrieta Hot Springs Rd

Cycle (sec): 100 Critical Vol./Cap.(X): 0.746
Loss Time (sec): 0 (Y+R=4.0 sec) Average Delay (sec/veh): 28.1
Optimal Cycle: 90 Level Of Service: C

Street Name:	Alta Murrieta Dr						Murrieta Hot Springs Rd					
Approach:	North Bound			South Bound			East Bound			West Bound		
Movement:	L -	T -	R	L -	T -	R	L -	T -	R	L -	T -	R
Control:	Protected			Protected			Protected			Protected		
Rights:	Include			Include			Include			Include		
Min. Green:	0	0	0	0	0	0	0	0	0	0	0	0
Lanes:	2 0	1 0	1	2 0	0 1	1	2 0	2 1	0	2 0	4 0	1
Volume Module:												
Base Vol:	394	195	45	208	132	412	717	1697	499	119	1293	112
Growth Adj:	1.00	1.00	1.00	1.00	1.00	1.00	1.00	1.00	1.00	1.00	1.00	1.00
Initial Bse:	394	195	45	208	132	412	717	1697	499	119	1293	112
User Adj:	1.00	1.00	1.00	1.00	1.00	1.00	1.00	1.00	1.00	1.00	1.00	1.00
PHF Adj:	1.00	1.00	1.00	1.00	1.00	1.00	1.00	1.00	1.00	1.00	1.00	1.00
PHF Volume:	394	195	45	208	132	412	717	1697	499	119	1293	112
Reduct Vol:	0	0	0	0	0	0	0	0	0	0	0	0
Reduced Vol:	394	195	45	208	132	412	717	1697	499	119	1293	112
PCE Adj:	1.00	1.00	1.00	1.00	1.00	1.00	1.00	1.00	1.00	1.00	1.00	1.00
MLF Adj:	1.00	1.00	1.00	1.00	1.00	1.00	1.00	1.00	1.00	1.00	1.00	1.00
FinalVolume:	394	195	45	208	132	412	717	1697	499	119	1293	112
Saturation Flow Module:												
Sat/Lane:	1900	1900	1900	1900	1900	1900	1900	1900	1900	1900	1900	1900
Adjustment:	0.92	1.00	0.85	0.92	0.89	0.89	0.92	0.88	0.88	0.92	0.91	0.85
Lanes:	2.00	1.00	1.00	2.00	0.49	1.51	2.00	2.32	0.68	2.00	4.00	1.00
Final Sat.:	3502	1900	1615	3502	817	2550	3502	3872	1139	3502	6916	1615
Capacity Analysis Module:												
Vol/Sat:	0.11	0.10	0.03	0.06	0.16	0.16	0.20	0.44	0.44	0.03	0.19	0.07
Crit Moves:	****				****			****		****		
Green/Cycle:	0.15	0.23	0.23	0.13	0.22	0.22	0.33	0.59	0.59	0.05	0.30	0.30
Volume/Cap:	0.75	0.44	0.12	0.44	0.75	0.75	0.62	0.75	0.75	0.75	0.62	0.23
Delay/Veh:	46.4	33.5	30.4	40.5	40.8	40.8	29.2	16.2	16.2	64.6	30.5	26.4
User DelAdj:	1.00	1.00	1.00	1.00	1.00	1.00	1.00	1.00	1.00	1.00	1.00	1.00
AdjDel/Veh:	46.4	33.5	30.4	40.5	40.8	40.8	29.2	16.2	16.2	64.6	30.5	26.4
LOS by Move:	D	C	C	D	D	D	C	B	B	E	C	C
HCM2kAvgQ:	8	5	1	3	9	9	10	19	19	3	10	3

Note: Queue reported is the number of cars per lane.

City of Murrieta General Plan
Existing
PM Peak Hour

Level Of Service Computation Report
2000 HCM Operations Method (Base Volume Alternative)

Intersection #52 Winchester Road - SR-79 & Murrieta Hot Springs Rd

Cycle (sec): 100 Critical Vol./Cap.(X): 0.668
Loss Time (sec): 0 (Y+R=4.0 sec) Average Delay (sec/veh): 26.4
Optimal Cycle: 69 Level Of Service: C

Street Name:	Winchester Road - SR-79						Murrieta Hot Springs Rd					
Approach:	North Bound			South Bound			East Bound			West Bound		
Movement:	L -	T -	R	L -	T -	R	L -	T -	R	L -	T -	R
Control:	Protected			Protected			Protected			Protected		
Rights:	Include			Include			Include			Include		
Min. Green:	0	0	0	0	0	0	0	0	0	0	0	0
Lanes:	2 0	3 0	1	2 0	3 0	1	2 0	3 0	1	2 0	2 0	1
Volume Module:												
Base Vol:	250	1689	204	122	1064	498	611	522	207	273	412	62
Growth Adj:	1.00	1.00	1.00	1.00	1.00	1.00	1.00	1.00	1.00	1.00	1.00	1.00
Initial Bse:	250	1689	204	122	1064	498	611	522	207	273	412	62
User Adj:	1.00	1.00	1.00	1.00	1.00	1.00	1.00	1.00	1.00	1.00	1.00	1.00
PHF Adj:	1.00	1.00	1.00	1.00	1.00	1.00	1.00	1.00	1.00	1.00	1.00	1.00
PHF Volume:	250	1689	204	122	1064	498	611	522	207	273	412	62
Reduct Vol:	0	0	0	0	0	0	0	0	0	0	0	0
Reduced Vol:	250	1689	204	122	1064	498	611	522	207	273	412	62
PCE Adj:	1.00	1.00	1.00	1.00	1.00	1.00	1.00	1.00	1.00	1.00	1.00	1.00
MLF Adj:	1.00	1.00	1.00	1.00	1.00	1.00	1.00	1.00	1.00	1.00	1.00	1.00
FinalVolume:	250	1689	204	122	1064	498	611	522	207	273	412	62
Saturation Flow Module:												
Sat/Lane:	1900	1900	1900	1900	1900	1900	1900	1900	1900	1900	1900	1900
Adjustment:	0.92	0.91	0.85	0.92	0.91	0.85	0.92	0.91	0.85	0.92	0.95	0.85
Lanes:	2.00	3.00	1.00	2.00	3.00	1.00	2.00	3.00	1.00	2.00	2.00	1.00
Final Sat.:	3502	5187	1615	3502	5187	1615	3502	5187	1615	3502	3610	1615
Capacity Analysis Module:												
Vol/Sat:	0.07	0.33	0.13	0.03	0.21	0.31	0.17	0.10	0.13	0.08	0.11	0.04
Crit Moves:	****					****	****				****	
Green/Cycle:	0.11	0.51	0.51	0.05	0.46	0.46	0.26	0.27	0.27	0.16	0.17	0.17
Volume/Cap:	0.67	0.63	0.25	0.63	0.44	0.67	0.67	0.37	0.48	0.48	0.67	0.22
Delay/Veh:	47.6	18.1	13.7	53.1	18.4	23.3	35.0	29.9	31.5	38.6	41.6	36.2
User DelAdj:	1.00	1.00	1.00	1.00	1.00	1.00	1.00	1.00	1.00	1.00	1.00	1.00
AdjDel/Veh:	47.6	18.1	13.7	53.1	18.4	23.3	35.0	29.9	31.5	38.6	41.6	36.2
LOS by Move:	D	B	B	D	B	C	C	C	C	D	D	D
HCM2kAvgQ:	5	14	3	3	8	13	10	5	6	4	7	2

Note: Queue reported is the number of cars per lane.

City of Murrieta General Plan
Existing
PM Peak Hour

Level Of Service Computation Report
2000 HCM Operations Method (Base Volume Alternative)

Intersection #53 Hancock Ave & Los Alamos Rd

Cycle (sec): 100 Critical Vol./Cap.(X): 0.756
Loss Time (sec): 0 (Y+R=4.0 sec) Average Delay (sec/veh): 34.5
Optimal Cycle: 94 Level Of Service: C

Street Name:	Hancock Ave						Los Alamos Rd					
Approach:	North Bound			South Bound			East Bound			West Bound		
Movement:	L - T - R			L - T - R			L - T - R			L - T - R		
Control:	Protected			Protected			Protected			Protected		
Rights:	Include			Include			Include			Include		
Min. Green:	0	0	0	0	0	0	0	0	0	0	0	0
Lanes:	1 0	1	1 0	2 0	0	1 0	1 0	1	1 0	1 0	1	1 0
Volume Module:												
Base Vol:	149	559	290	459	222	65	198	965	62	163	537	295
Growth Adj:	1.00	1.00	1.00	1.00	1.00	1.00	1.00	1.00	1.00	1.00	1.00	1.00
Initial Bse:	149	559	290	459	222	65	198	965	62	163	537	295
User Adj:	1.00	1.00	1.00	1.00	1.00	1.00	1.00	1.00	1.00	1.00	1.00	1.00
PHF Adj:	1.00	1.00	1.00	1.00	1.00	1.00	1.00	1.00	1.00	1.00	1.00	1.00
PHF Volume:	149	559	290	459	222	65	198	965	62	163	537	295
Reduct Vol:	0	0	0	0	0	0	0	0	0	0	0	0
Reduced Vol:	149	559	290	459	222	65	198	965	62	163	537	295
PCE Adj:	1.00	1.00	1.00	1.00	1.00	1.00	1.00	1.00	1.00	1.00	1.00	1.00
MLF Adj:	1.00	1.00	1.00	1.00	1.00	1.00	1.00	1.00	1.00	1.00	1.00	1.00
FinalVolume:	149	559	290	459	222	65	198	965	62	163	537	295
Saturation Flow Module:												
Sat/Lane:	1900	1900	1900	1900	1900	1900	1900	1900	1900	1900	1900	1900
Adjustment:	0.95	0.90	0.90	0.92	0.97	0.97	0.95	0.94	0.94	0.95	0.90	0.90
Lanes:	1.00	1.32	0.68	2.00	0.77	0.23	1.00	1.88	0.12	1.00	1.29	0.71
Final Sat.:	1805	2256	1170	3502	1420	416	1805	3362	216	1805	2207	1212
Capacity Analysis Module:												
Vol/Sat:	0.08	0.25	0.25	0.13	0.16	0.16	0.11	0.29	0.29	0.09	0.24	0.24
Crit Moves:		****		****				****		****		
Green/Cycle:	0.17	0.33	0.33	0.17	0.33	0.33	0.16	0.38	0.38	0.12	0.34	0.34
Volume/Cap:	0.48	0.76	0.76	0.76	0.48	0.48	0.71	0.76	0.76	0.76	0.71	0.71
Delay/Veh:	38.4	33.0	33.0	44.8	27.4	27.4	48.2	29.5	29.5	56.8	30.4	30.4
User DelAdj:	1.00	1.00	1.00	1.00	1.00	1.00	1.00	1.00	1.00	1.00	1.00	1.00
AdjDel/Veh:	38.4	33.0	33.0	44.8	27.4	27.4	48.2	29.5	29.5	56.8	30.4	30.4
LOS by Move:	D	C	C	D	C	C	D	C	C	E	C	C
HCM2kAvgQ:	5	14	14	9	7	7	7	16	16	7	13	13

Note: Queue reported is the number of cars per lane.

City of Murrieta General Plan
Existing
PM Peak Hour

Level Of Service Computation Report
2000 HCM Operations Method (Base Volume Alternative)

Intersection #54 I-215 SB Ramps & Los Alamos Rd

Cycle (sec): 100 Critical Vol./Cap.(X): 0.574
Loss Time (sec): 0 (Y+R=4.0 sec) Average Delay (sec/veh): 15.6
Optimal Cycle: 54 Level Of Service: B

Street Name:	I-215 SB Ramps						Los Alamos Rd					
Approach:	North Bound			South Bound			East Bound			West Bound		
Movement:	L - T - R			L - T - R			L - T - R			L - T - R		
Control:	Protected			Protected			Protected			Protected		
Rights:	Include			Include			Include			Include		
Min. Green:	0	0	0	0	0	0	0	0	0	0	0	0
Lanes:	0 0	0	0 0	1 0	1!	0 1	0 0	2	1 0	2 0	2	0 0
Volume Module:												
Base Vol:	0	0	0	192	3	408	0	1441	287	160	738	0
Growth Adj:	1.00	1.00	1.00	1.00	1.00	1.00	1.00	1.00	1.00	1.00	1.00	1.00
Initial Bse:	0	0	0	192	3	408	0	1441	287	160	738	0
User Adj:	1.00	1.00	1.00	1.00	1.00	1.00	1.00	1.00	1.00	1.00	1.00	1.00
PHF Adj:	1.00	1.00	1.00	1.00	1.00	1.00	1.00	1.00	1.00	1.00	1.00	1.00
PHF Volume:	0	0	0	192	3	408	0	1441	287	160	738	0
Reduct Vol:	0	0	0	0	0	0	0	0	0	0	0	0
Reduced Vol:	0	0	0	192	3	408	0	1441	287	160	738	0
PCE Adj:	1.00	1.00	1.00	1.00	1.00	1.00	1.00	1.00	1.00	1.00	1.00	1.00
MLF Adj:	1.00	1.00	1.00	1.00	1.00	1.00	1.00	1.00	1.00	1.00	1.00	1.00
FinalVolume:	0	0	0	192	3	408	0	1441	287	160	738	0
Saturation Flow Module:												
Sat/Lane:	1900	1900	1900	1900	1900	1900	1900	1900	1900	1900	1900	1900
Adjustment:	1.00	1.00	1.00	0.85	0.85	0.85	1.00	0.89	0.89	0.92	0.95	1.00
Lanes:	0.00	0.00	0.00	1.32	0.01	1.67	0.00	2.50	0.50	2.00	2.00	0.00
Final Sat.:	0	0	0	2139	16	2718	0	4217	840	3502	3610	0
Capacity Analysis Module:												
Vol/Sat:	0.00	0.00	0.00	0.09	0.19	0.15	0.00	0.34	0.34	0.05	0.20	0.00
Crit Moves:					****			****		****		
Green/Cycle:	0.00	0.00	0.00	0.33	0.33	0.33	0.00	0.60	0.60	0.08	0.67	0.00
Volume/Cap:	0.00	0.00	0.00	0.28	0.57	0.46	0.00	0.57	0.57	0.57	0.30	0.00
Delay/Veh:	0.0	0.0	0.0	25.1	28.8	27.1	0.0	12.7	12.7	47.3	6.7	0.0
User DelAdj:	1.00	1.00	1.00	1.00	1.00	1.00	1.00	1.00	1.00	1.00	1.00	1.00
AdjDel/Veh:	0.0	0.0	0.0	25.1	28.8	27.1	0.0	12.7	12.7	47.3	6.7	0.0
LOS by Move:	A	A	A	C	C	C	A	B	B	D	A	A
HCM2kAvgQ:	0	0	0	3	8	6	0	12	12	3	5	0

Note: Queue reported is the number of cars per lane.

City of Murrieta General Plan
Existing
PM Peak Hour

Level Of Service Computation Report
2000 HCM Operations Method (Base Volume Alternative)

Intersection #55 I-215 NB Ramps & Los Alamos Rd

Cycle (sec): 100 Critical Vol./Cap.(X): 0.437
Loss Time (sec): 0 (Y+R=4.0 sec) Average Delay (sec/veh): 15.0
Optimal Cycle: 41 Level Of Service: B

Street Name:	I-215 NB Ramps						Los Alamos Rd					
Approach:	North Bound			South Bound			East Bound			West Bound		
Movement:	L - T - R			L - T - R			L - T - R			L - T - R		
Control:	Protected			Protected			Protected			Protected		
Rights:	Include			Include			Include			Include		
Min. Green:	0	0	0	0	0	0	0	0	0	0	0	0
Lanes:	1 0	0 1	0	0 0	0 0	0	2 0	3 0	0	0 0	2 0	1
Volume Module:												
Base Vol:	129	4	175	0	0	0	394	1181	0	0	774	165
Growth Adj:	1.00	1.00	1.00	1.00	1.00	1.00	1.00	1.00	1.00	1.00	1.00	1.00
Initial Bse:	129	4	175	0	0	0	394	1181	0	0	774	165
User Adj:	1.00	1.00	1.00	1.00	1.00	1.00	1.00	1.00	1.00	1.00	1.00	1.00
PHF Adj:	1.00	1.00	1.00	1.00	1.00	1.00	1.00	1.00	1.00	1.00	1.00	1.00
PHF Volume:	129	4	175	0	0	0	394	1181	0	0	774	165
Reduct Vol:	0	0	0	0	0	0	0	0	0	0	0	0
Reduced Vol:	129	4	175	0	0	0	394	1181	0	0	774	165
PCE Adj:	1.00	1.00	1.00	1.00	1.00	1.00	1.00	1.00	1.00	1.00	1.00	1.00
MLF Adj:	1.00	1.00	1.00	1.00	1.00	1.00	1.00	1.00	1.00	1.00	1.00	1.00
FinalVolume:	129	4	175	0	0	0	394	1181	0	0	774	165
Saturation Flow Module:												
Sat/Lane:	1900	1900	1900	1900	1900	1900	1900	1900	1900	1900	1900	1900
Adjustment:	0.85	0.85	0.85	1.00	1.00	1.00	0.92	0.91	1.00	1.00	0.95	0.85
Lanes:	1.00	0.02	0.98	0.00	0.00	0.00	2.00	3.00	0.00	0.00	2.00	1.00
Final Sat.:	1615	36	1584	0	0	0	3502	5187	0	0	3610	1615
Capacity Analysis Module:												
Vol/Sat:	0.08	0.11	0.11	0.00	0.00	0.00	0.11	0.23	0.00	0.00	0.21	0.10
Crit Moves:		****					****				****	
Green/Cycle:	0.25	0.25	0.25	0.00	0.00	0.00	0.26	0.75	0.00	0.00	0.49	0.49
Volume/Cap:	0.32	0.44	0.44	0.00	0.00	0.00	0.44	0.30	0.00	0.00	0.44	0.21
Delay/Veh:	30.8	32.2	32.2	0.0	0.0	0.0	31.4	4.2	0.0	0.0	16.7	14.6
User DelAdj:	1.00	1.00	1.00	1.00	1.00	1.00	1.00	1.00	1.00	1.00	1.00	1.00
AdjDel/Veh:	30.8	32.2	32.2	0.0	0.0	0.0	31.4	4.2	0.0	0.0	16.7	14.6
LOS by Move:	C	C	C	A	A	A	C	A	A	A	B	B
HCM2kAvgQ:	3	5	5	0	0	0	5	4	0	0	8	3

Note: Queue reported is the number of cars per lane.

City of Murrieta General Plan
Existing
PM Peak Hour

Level Of Service Computation Report
2000 HCM Operations Method (Base Volume Alternative)

Intersection #56 Whitewood Rd & Los Alamos Rd

Cycle (sec): 100 Critical Vol./Cap.(X): 0.422
Loss Time (sec): 0 (Y+R=4.0 sec) Average Delay (sec/veh): 26.0
Optimal Cycle: 39 Level Of Service: C

Street Name:	Whitewood Rd						Los Alamos Rd					
Approach:	North Bound			South Bound			East Bound			West Bound		
Movement:	L - T - R			L - T - R			L - T - R			L - T - R		
Control:	Protected			Protected			Protected			Protected		
Rights:	Include			Include			Include			Include		
Min. Green:	0	0	0	0	0	0	0	0	0	0	0	0
Lanes:	1 0	1 1	0	1 0	2 0	1	1 0	2 0	1	1 0	1 1	0
Volume Module:												
Base Vol:	197	343	64	13	196	162	269	353	265	70	207	18
Growth Adj:	1.00	1.00	1.00	1.00	1.00	1.00	1.00	1.00	1.00	1.00	1.00	1.00
Initial Bse:	197	343	64	13	196	162	269	353	265	70	207	18
User Adj:	1.00	1.00	1.00	1.00	1.00	1.00	1.00	1.00	1.00	1.00	1.00	1.00
PHF Adj:	1.00	1.00	1.00	1.00	1.00	1.00	1.00	1.00	1.00	1.00	1.00	1.00
PHF Volume:	197	343	64	13	196	162	269	353	265	70	207	18
Reduct Vol:	0	0	0	0	0	0	0	0	0	0	0	0
Reduced Vol:	197	343	64	13	196	162	269	353	265	70	207	18
PCE Adj:	1.00	1.00	1.00	1.00	1.00	1.00	1.00	1.00	1.00	1.00	1.00	1.00
MLF Adj:	1.00	1.00	1.00	1.00	1.00	1.00	1.00	1.00	1.00	1.00	1.00	1.00
FinalVolume:	197	343	64	13	196	162	269	353	265	70	207	18
Saturation Flow Module:												
Sat/Lane:	1900	1900	1900	1900	1900	1900	1900	1900	1900	1900	1900	1900
Adjustment:	0.95	0.93	0.93	0.95	0.95	0.85	0.95	0.95	0.85	0.95	0.94	0.94
Lanes:	1.00	1.69	0.31	1.00	2.00	1.00	1.00	2.00	1.00	1.00	1.84	0.16
Final Sat.:	1805	2969	554	1805	3610	1615	1805	3610	1615	1805	3281	285
Capacity Analysis Module:												
Vol/Sat:	0.11	0.12	0.12	0.01	0.05	0.10	0.15	0.10	0.16	0.04	0.06	0.06
Crit Moves:	****					****	****				****	
Green/Cycle:	0.26	0.47	0.47	0.03	0.24	0.24	0.35	0.41	0.41	0.10	0.15	0.15
Volume/Cap:	0.42	0.25	0.25	0.25	0.23	0.42	0.42	0.24	0.40	0.40	0.42	0.42
Delay/Veh:	31.4	16.1	16.1	49.9	30.8	33.0	25.0	19.6	21.4	44.0	39.1	39.1
User DelAdj:	1.00	1.00	1.00	1.00	1.00	1.00	1.00	1.00	1.00	1.00	1.00	1.00
AdjDel/Veh:	31.4	16.1	16.1	49.9	30.8	33.0	25.0	19.6	21.4	44.0	39.1	39.1
LOS by Move:	C	B	B	D	C	C	C	B	C	D	D	D
HCM2kAvgQ:	5	4	4	1	3	5	6	4	6	2	4	4

Note: Queue reported is the number of cars per lane.

City of Murrieta General Plan
Existing
PM Peak Hour

Level Of Service Computation Report
2000 HCM Operations Method (Base Volume Alternative)

Intersection #57 Whitewood Rd & Murrieta Hot Springs Rd

Cycle (sec): 100 Critical Vol./Cap.(X): 0.594
Loss Time (sec): 0 (Y+R=4.0 sec) Average Delay (sec/veh): 9.7
Optimal Cycle: 56 Level Of Service: A

Street Name:	Whitewood Rd						Murrieta Hot Springs Rd					
Approach:	North Bound			South Bound			East Bound			West Bound		
Movement:	L	- T	- R	L	- T	- R	L	- T	- R	L	- T	- R
Control:	Protected			Protected			Protected			Protected		
Rights:	Include			Include			Include			Include		
Min. Green:	0	0	0	0	0	0	0	0	0	0	0	0
Lanes:	1 0	0 1	0	2 0	1 0	1	1 0	2 1	0	1 0	2 1	0
Volume Module:												
Base Vol:	6	5	16	316	7	93	101	1903	6	21	1776	417
Growth Adj:	1.00	1.00	1.00	1.00	1.00	1.00	1.00	1.00	1.00	1.00	1.00	1.00
Initial Bse:	6	5	16	316	7	93	101	1903	6	21	1776	417
User Adj:	1.00	1.00	1.00	1.00	1.00	1.00	1.00	1.00	1.00	1.00	1.00	1.00
PHF Adj:	1.00	1.00	1.00	1.00	1.00	1.00	1.00	1.00	1.00	1.00	1.00	1.00
PHF Volume:	6	5	16	316	7	93	101	1903	6	21	1776	417
Reduct Vol:	0	0	0	0	0	0	0	0	0	0	0	0
Reduced Vol:	6	5	16	316	7	93	101	1903	6	21	1776	417
PCE Adj:	1.00	1.00	1.00	1.00	1.00	1.00	1.00	1.00	1.00	1.00	1.00	1.00
MLF Adj:	1.00	1.00	1.00	1.00	1.00	1.00	1.00	1.00	1.00	1.00	1.00	1.00
FinalVolume:	6	5	16	316	7	93	101	1903	6	21	1776	417
Saturation Flow Module:												
Sat/Lane:	1900	1900	1900	1900	1900	1900	1900	1900	1900	1900	1900	1900
Adjustment:	0.95	0.89	0.89	0.92	1.00	0.85	0.95	0.91	0.91	0.95	0.88	0.88
Lanes:	1.00	0.24	0.76	2.00	1.00	1.00	1.00	2.99	0.01	1.00	2.43	0.57
Final Sat.:	1805	401	1283	3502	1900	1615	1805	5171	16	1805	4083	959
Capacity Analysis Module:												
Vol/Sat:	0.00	0.01	0.01	0.09	0.00	0.06	0.06	0.37	0.37	0.01	0.43	0.43
Crit Moves:		****		****			****				****	
Green/Cycle:	0.01	0.02	0.02	0.15	0.16	0.16	0.09	0.80	0.80	0.03	0.73	0.73
Volume/Cap:	0.35	0.59	0.59	0.59	0.02	0.35	0.59	0.46	0.46	0.46	0.59	0.59
Delay/Veh:	61.3	72.8	72.8	41.3	35.1	37.9	49.0	3.2	3.2	55.2	6.6	6.6
User DelAdj:	1.00	1.00	1.00	1.00	1.00	1.00	1.00	1.00	1.00	1.00	1.00	1.00
AdjDel/Veh:	61.3	72.8	72.8	41.3	35.1	37.9	49.0	3.2	3.2	55.2	6.6	6.6
LOS by Move:	E	E	E	D	D	D	D	A	A	E	A	A
HCM2kAvgQ:	1	2	2	6	0	3	4	7	7	1	12	12

Note: Queue reported is the number of cars per lane.

City of Murrieta General Plan
Existing
PM Peak Hour

Level Of Service Computation Report
2000 HCM Unsignalized Method (Base Volume Alternative)

Intersection #58 Adams Ave & Guava St

Average Delay (sec/veh): 4.8 Worst Case Level Of Service: A[9.3]

Street Name:	Adams Ave						Guava St					
Approach:	North Bound			South Bound			East Bound			West Bound		
Movement:	L	- T	- R	L	- T	- R	L	- T	- R	L	- T	- R
Control:	Uncontrolled			Uncontrolled			Stop Sign			Stop Sign		
Rights:	Include			Include			Include			Include		
Lanes:	0 0	0 1	0	0 1	0 0	0	0 0	0 0	0	0 0	1! 0	0
Volume Module:												
Base Vol:	0	86	26	77	22	0	0	0	0	7	0	90
Growth Adj:	1.00	1.00	1.00	1.00	1.00	1.00	1.00	1.00	1.00	1.00	1.00	1.00
Initial Bse:	0	86	26	77	22	0	0	0	0	7	0	90
User Adj:	1.00	1.00	1.00	1.00	1.00	1.00	1.00	1.00	1.00	1.00	1.00	1.00
PHF Adj:	1.00	1.00	1.00	1.00	1.00	1.00	1.00	1.00	1.00	1.00	1.00	1.00
PHF Volume:	0	86	26	77	22	0	0	0	0	7	0	90
Reduct Vol:	0	0	0	0	0	0	0	0	0	0	0	0
FinalVolume:	0	86	26	77	22	0	0	0	0	7	0	90
Critical Gap Module:												
Critical Gp:	xxxxx	xxxx	xxxxx	4.1	xxxx	xxxxx	xxxxx	xxxx	xxxxx	6.4	6.5	6.2
FollowUpTim:	xxxxx	xxxx	xxxxx	2.2	xxxx	xxxxx	xxxxx	xxxx	xxxxx	3.5	4.0	3.3
Capacity Module:												
Cnflict Vol:	xxxx	xxxx	xxxxx	112	xxxx	xxxxx	xxxx	xxxx	xxxxx	275	275	99
Potent Cap.:	xxxx	xxxx	xxxxx	1490	xxxx	xxxxx	xxxx	xxxx	xxxxx	719	636	962
Move Cap.:	xxxx	xxxx	xxxxx	1490	xxxx	xxxxx	xxxx	xxxx	xxxxx	689	601	962
Volume/Cap:	xxxx	xxxx	xxxx	0.05	xxxx	xxxx	xxxx	xxxx	xxxx	0.01	0.00	0.09
Level Of Service Module:												
2Way95thQ:	xxxx	xxxx	xxxxx	0.2	xxxx	xxxxx	xxxx	xxxx	xxxxx	xxxx	xxxx	xxxxx
Control Del:	xxxxx	xxxx	xxxxx	7.5	xxxx	xxxxx	xxxxx	xxxx	xxxxx	xxxxx	xxxx	xxxxx
LOS by Move:	*	*	*	A	*	*	*	*	*	*	*	*
Movement:	LT -	LTR -	RT	LT -	LTR -	RT	LT -	LTR -	RT	LT -	LTR -	RT
Shared Cap.:	xxxx	xxxx	xxxxx	xxxx	xxxx	xxxxx	xxxx	xxxx	xxxxx	xxxx	936	xxxxx
SharedQueue:	xxxxx	xxxx	xxxxx	0.2	xxxx	xxxxx	xxxxx	xxxx	xxxxx	xxxxx	0.3	xxxxx
Shrd ConDel:	xxxxx	xxxx	xxxxx	7.5	xxxx	xxxxx	xxxxx	xxxx	xxxxx	xxxxx	9.3	xxxxx
Shared LOS:	*	*	*	A	*	*	*	*	*	*	A	*
ApproachDel:	xxxxxx			xxxxxx			xxxxxx				9.3	
ApproachLOS:	*			*			*				A	

Note: Queue reported is the number of cars per lane.

City of Murrieta General Plan
Existing
PM Peak Hour

Level Of Service Computation Report
2000 HCM Operations Method (Base Volume Alternative)

Intersection #59 Nutmeg St & Clinton Keith Rd

Cycle (sec): 100 Critical Vol./Cap.(X): 0.406
Loss Time (sec): 0 (Y+R=4.0 sec) Average Delay (sec/veh): 21.0
Optimal Cycle: 31 Level Of Service: C

Street Name:	Nutmeg St						Clinton Keith Rd					
Approach:	North Bound			South Bound			East Bound			West Bound		
Movement:	L - T - R			L - T - R			L - T - R			L - T - R		
Control:	Permitted			Permitted			Protected			Protected		
Rights:	Include			Include			Include			Include		
Min. Green:	0	0	0	0	0	0	0	0	0	0	0	0
Lanes:	1 0	1	1 0	1 0	1	1 0	1 0	1	1 0	1 0	1	1 0
Volume Module:												
Base Vol:	48	61	192	61	23	21	52	533	69	210	397	73
Growth Adj:	1.00	1.00	1.00	1.00	1.00	1.00	1.00	1.00	1.00	1.00	1.00	1.00
Initial Bse:	48	61	192	61	23	21	52	533	69	210	397	73
User Adj:	1.00	1.00	1.00	1.00	1.00	1.00	1.00	1.00	1.00	1.00	1.00	1.00
PHF Adj:	1.00	1.00	1.00	1.00	1.00	1.00	1.00	1.00	1.00	1.00	1.00	1.00
PHF Volume:	48	61	192	61	23	21	52	533	69	210	397	73
Reduct Vol:	0	0	0	0	0	0	0	0	0	0	0	0
Reduced Vol:	48	61	192	61	23	21	52	533	69	210	397	73
PCE Adj:	1.00	1.00	1.00	1.00	1.00	1.00	1.00	1.00	1.00	1.00	1.00	1.00
MLF Adj:	1.00	1.00	1.00	1.00	1.00	1.00	1.00	1.00	1.00	1.00	1.00	1.00
FinalVolume:	48	61	192	61	23	21	52	533	69	210	397	73
Saturation Flow Module:												
Sat/Lane:	1900	1900	1900	1900	1900	1900	1900	1900	1900	1900	1900	1900
Adjustment:	0.71	0.84	0.84	0.48	0.88	0.88	0.95	0.93	0.93	0.95	0.93	0.93
Lanes:	1.00	1.00	1.00	1.00	1.05	0.95	1.00	1.77	0.23	1.00	1.69	0.31
Final Sat.:	1345	1599	1599	906	1751	1599	1805	3142	407	1805	2979	548
Capacity Analysis Module:												
Vol/Sat:	0.04	0.04	0.12	0.07	0.01	0.01	0.03	0.17	0.17	0.12	0.13	0.13
Crit Moves:			****					****		****		
Green/Cycle:	0.30	0.30	0.30	0.30	0.30	0.30	0.13	0.42	0.42	0.29	0.58	0.58
Volume/Cap:	0.12	0.13	0.41	0.23	0.04	0.04	0.23	0.41	0.41	0.41	0.23	0.23
Delay/Veh:	25.9	25.8	28.6	27.0	25.2	25.2	39.9	20.6	20.6	29.3	10.3	10.3
User DelAdj:	1.00	1.00	1.00	1.00	1.00	1.00	1.00	1.00	1.00	1.00	1.00	1.00
AdjDel/Veh:	25.9	25.8	28.6	27.0	25.2	25.2	39.9	20.6	20.6	29.3	10.3	10.3
LOS by Move:	C	C	C	C	C	C	D	C	C	C	B	B
HCM2kAvgQ:	1	1	5	2	1	1	2	7	7	5	4	4

Note: Queue reported is the number of cars per lane.

City of Murrieta General Plan
Existing
PM Peak Hour

Level Of Service Computation Report
2000 HCM Operations Method (Base Volume Alternative)

Intersection #61 I-215 SB Ramps & Scott Rd

Cycle (sec): 100 Critical Vol./Cap.(X): 0.763
Loss Time (sec): 0 (Y+R=4.0 sec) Average Delay (sec/veh): 25.6
Optimal Cycle: 96 Level Of Service: C

Street Name:	I-215 SB Ramps						Scott Rd					
Approach:	North Bound			South Bound			East Bound			West Bound		
Movement:	L - T - R			L - T - R			L - T - R			L - T - R		
Control:	Protected			Protected			Protected			Protected		
Rights:	Include			Include			Include			Include		
Min. Green:	0	0	0	0	0	0	0	0	0	0	0	0
Lanes:	0 0	0	0 0	0 1	0	0 1	0 0	1	0 1	1 0	1	0 0
Volume Module:												
Base Vol:	0	0	0	334	4	114	0	580	165	465	603	0
Growth Adj:	1.00	1.00	1.00	1.00	1.00	1.00	1.00	1.00	1.00	1.00	1.00	1.00
Initial Bse:	0	0	0	334	4	114	0	580	165	465	603	0
User Adj:	1.00	1.00	1.00	1.00	1.00	1.00	1.00	1.00	1.00	1.00	1.00	1.00
PHF Adj:	1.00	1.00	1.00	1.00	1.00	1.00	1.00	1.00	1.00	1.00	1.00	1.00
PHF Volume:	0	0	0	334	4	114	0	580	165	465	603	0
Reduct Vol:	0	0	0	0	0	0	0	0	0	0	0	0
Reduced Vol:	0	0	0	334	4	114	0	580	165	465	603	0
PCE Adj:	1.00	1.00	1.00	1.00	1.00	1.00	1.00	1.00	1.00	1.00	1.00	1.00
MLF Adj:	1.00	1.00	1.00	1.00	1.00	1.00	1.00	1.00	1.00	1.00	1.00	1.00
FinalVolume:	0	0	0	334	4	114	0	580	165	465	603	0
Saturation Flow Module:												
Sat/Lane:	1900	1900	1900	1900	1900	1900	1900	1900	1900	1900	1900	1900
Adjustment:	1.00	1.00	1.00	0.89	0.89	0.85	1.00	1.00	0.85	0.95	1.00	1.00
Lanes:	0.00	0.00	0.00	0.99	0.01	1.00	0.00	1.00	1.00	1.00	1.00	0.00
Final Sat.:	0	0	0	1669	20	1615	0	1900	1615	1805	1900	0
Capacity Analysis Module:												
Vol/Sat:	0.00	0.00	0.00	0.20	0.20	0.07	0.00	0.31	0.10	0.26	0.32	0.00
Crit Moves:				****				****		****		
Green/Cycle:	0.00	0.00	0.00	0.26	0.26	0.26	0.00	0.40	0.40	0.34	0.74	0.00
Volume/Cap:	0.00	0.00	0.00	0.76	0.76	0.27	0.00	0.76	0.26	0.76	0.43	0.00
Delay/Veh:	0.0	0.0	0.0	41.7	41.7	29.6	0.0	30.5	20.3	35.2	5.3	0.0
User DelAdj:	1.00	1.00	1.00	1.00	1.00	1.00	1.00	1.00	1.00	1.00	1.00	1.00
AdjDel/Veh:	0.0	0.0	0.0	41.7	41.7	29.6	0.0	30.5	20.3	35.2	5.3	0.0
LOS by Move:	A	A	A	D	D	C	A	C	C	D	A	A
HCM2kAvgQ:	0	0	0	11	11	3	0	17	3	14	7	0

Note: Queue reported is the number of cars per lane.

City of Murrieta General Plan
Existing
PM Peak Hour

Level Of Service Computation Report
2000 HCM Operations Method (Base Volume Alternative)

Intersection #62 I-215 NB Ramps & Scott Rd

Cycle (sec):	100	Critical Vol./Cap.(X):	0.832
Loss Time (sec):	0 (Y+R=4.0 sec)	Average Delay (sec/veh):	23.4
Optimal Cycle:	136	Level Of Service:	C

Street Name:	I-215 NB Ramps						Scott Rd					
Approach:	North Bound			South Bound			East Bound			West Bound		
Movement:	L	T	R	L	T	R	L	T	R	L	T	R
Control:	Protected			Protected			Protected			Protected		
Rights:	Include			Include			Include			Include		
Min. Green:	0	0	0	0	0	0	0	0	0	0	0	0
Lanes:	0 1	0	0 1	0 0	0	0 0	1 0	1	0 0	0 0	1	0 1
Volume Module:												
Base Vol:	182	6	468	0	0	0	112	780	0	0	913	364
Growth Adj:	1.00	1.00	1.00	1.00	1.00	1.00	1.00	1.00	1.00	1.00	1.00	1.00
Initial Bse:	182	6	468	0	0	0	112	780	0	0	913	364
User Adj:	1.00	1.00	1.00	1.00	1.00	1.00	1.00	1.00	1.00	1.00	1.00	1.00
PHF Adj:	1.00	1.00	1.00	1.00	1.00	1.00	1.00	1.00	1.00	1.00	1.00	1.00
PHF Volume:	182	6	468	0	0	0	112	780	0	0	913	364
Reduct Vol:	0	0	0	0	0	0	0	0	0	0	0	0
Reduced Vol:	182	6	468	0	0	0	112	780	0	0	913	364
PCE Adj:	1.00	1.00	1.00	1.00	1.00	1.00	1.00	1.00	1.00	1.00	1.00	1.00
MLF Adj:	1.00	1.00	1.00	1.00	1.00	1.00	1.00	1.00	1.00	1.00	1.00	1.00
FinalVolume:	182	6	468	0	0	0	112	780	0	0	913	364
Saturation Flow Module:												
Sat/Lane:	1900	1900	1900	1900	1900	1900	1900	1900	1900	1900	1900	1900
Adjustment:	0.96	0.96	0.85	1.00	1.00	1.00	0.95	1.00	1.00	1.00	1.00	0.85
Lanes:	0.97	0.03	1.00	0.00	0.00	0.00	1.00	1.00	0.00	0.00	1.00	1.00
Final Sat.:	1762	58	1615	0	0	0	1805	1900	0	0	1900	1615
Capacity Analysis Module:												
Vol/Sat:	0.10	0.10	0.29	0.00	0.00	0.00	0.06	0.41	0.00	0.00	0.48	0.23
Crit Moves:			****				****				****	
Green/Cycle:	0.35	0.35	0.35	0.00	0.00	0.00	0.07	0.65	0.00	0.00	0.58	0.58
Volume/Cap:	0.30	0.30	0.83	0.00	0.00	0.00	0.83	0.63	0.00	0.00	0.83	0.39
Delay/Veh:	24.0	24.0	40.2	0.0	0.0	0.0	79.3	11.3	0.0	0.0	22.8	11.8
User DelAdj:	1.00	1.00	1.00	1.00	1.00	1.00	1.00	1.00	1.00	1.00	1.00	1.00
AdjDel/Veh:	24.0	24.0	40.2	0.0	0.0	0.0	79.3	11.3	0.0	0.0	22.8	11.8
LOS by Move:	C	C	D	A	A	A	E	B	A	A	C	B
HCM2kAvgQ:	4	4	16	0	0	0	6	14	0	0	25	6

Note: Queue reported is the number of cars per lane.

EXISTING GENERAL PLAN

City of Murrieta General Plan
Existing General Plan
AM Peak Hour

Scenario Report

Scenario:	Existing GP AM
Command:	Existing GP AM
Volume:	Existing GP AM
Geometry:	Future
Impact Fee:	Default Impact Fee
Trip Generation:	Default Trip Generation
Trip Distribution:	Default Trip Distribution
Paths:	Default Path
Routes:	Default Route
Configuration:	Existing GP AM

City of Murrieta General Plan
Existing General Plan
AM Peak Hour

Turning Movement Report

Volume	Northbound			Southbound			Eastbound			Westbound			Total
Type	Left	Thru	Right	Left	Thru	Right	Left	Thru	Right	Left	Thru	Right	Volume
#1 Menifee Road & Scott Road													
Base	280	408	428	238	638	89	99	499	248	719	508	258	4412
Added	0	0	0	0	0	0	0	0	0	0	0	0	0
Total	280	408	428	238	638	89	99	499	248	719	508	258	4412
#2 Leon Road & Scott Road													
Base	0	0	0	0	0	0	0	0	0	0	0	0	0
Added	0	0	0	0	0	0	0	0	0	0	0	0	0
Total	0	0	0	0	0	0	0	0	0	0	0	0	0
#3 Winchester Road/SR-79 & Scott Road													
Base	118	1449	54	935	2477	74	113	174	63	16	157	984	6614
Added	0	0	0	0	0	0	0	0	0	0	0	0	0
Total	118	1449	54	935	2477	74	113	174	63	16	157	984	6614
#4 Antelope Road & Keller Road													
Base	0	0	0	0	0	0	0	0	0	0	0	0	0
Added	0	0	0	0	0	0	0	0	0	0	0	0	0
Total	0	0	0	0	0	0	0	0	0	0	0	0	0
#5 Menifee Road - Meadowlark Road & Keller Road													
Base	0	0	0	0	0	0	0	0	0	0	0	0	0
Added	0	0	0	0	0	0	0	0	0	0	0	0	0
Total	0	0	0	0	0	0	0	0	0	0	0	0	0
#6 Briggs Road & Keller Road													
Base	275	18	53	0	9	21	2	149	384	6	308	1	1226
Added	0	0	0	0	0	0	0	0	0	0	0	0	0
Total	275	18	53	0	9	21	2	149	384	6	308	1	1226
#7 Leon Road & Keller Road													
Base	0	0	0	0	0	0	0	0	0	0	0	0	0
Added	0	0	0	0	0	0	0	0	0	0	0	0	0
Total	0	0	0	0	0	0	0	0	0	0	0	0	0
#8 Winchester Road - SR-79 & Keller Road													
Base	0	0	0	0	0	0	0	0	0	0	0	0	0
Added	0	0	0	0	0	0	0	0	0	0	0	0	0
Total	0	0	0	0	0	0	0	0	0	0	0	0	0
#9 Antelope Road & Golden City Drive - Baxter Road													
Base	1	51	319	215	808	22	0	33	6	377	209	402	2443
Added	0	0	0	0	0	0	0	0	0	0	0	0	0
Total	1	51	319	215	808	22	0	33	6	377	209	402	2443

City of Murrieta General Plan
Existing General Plan
AM Peak Hour

Volume Type	Northbound Left	Northbound Thru	Northbound Right	Southbound Left	Southbound Thru	Southbound Right	Eastbound Left	Eastbound Thru	Eastbound Right	Westbound Left	Westbound Thru	Westbound Right	Total Volume
#10 Whitewood Roa - /Meadowlark Road & Golden City Drive - Baxter Road													
Base	297	407	3	0	872	639	19	3	475	1	15	1	2732
Added	0	0	0	0	0	0	0	0	0	0	0	0	0
Total	297	407	3	0	872	639	19	3	475	1	15	1	2732
#11 Briggs Road & Baxter Road - Jean Nicholas													
Base	0	151	27	60	363	0	0	0	0	2	0	54	657
Added	0	0	0	0	0	0	0	0	0	0	0	0	0
Total	0	151	27	60	363	0	0	0	0	2	0	54	657
#12 Leon Road & Jean Nicholas													
Base	0	0	0	0	0	0	0	0	0	0	0	0	0
Added	0	0	0	0	0	0	0	0	0	0	0	0	0
Total	0	0	0	0	0	0	0	0	0	0	0	0	0
#13 Winchester Road - SR-79 & Nicholas - Skyview													
Base	134	1425	334	18	2705	26	35	297	138	123	322	173	5730
Added	0	0	0	0	0	0	0	0	0	0	0	0	0
Total	134	1425	334	18	2705	26	35	297	138	123	322	173	5730
#14 Antelope Road & Linnel Lane Extension													
Base	23	400	60	37	522	364	65	197	137	18	258	220	2301
Added	0	0	0	0	0	0	0	0	0	0	0	0	0
Total	23	400	60	37	522	364	65	197	137	18	258	220	2301
#15 Whitewood Road - Meadowlark Road & Linnel Lane Extension													
Base	28	665	5	3	813	454	97	13	184	1	14	16	2293
Added	0	0	0	0	0	0	0	0	0	0	0	0	0
Total	28	665	5	3	813	454	97	13	184	1	14	16	2293
#16 Leon Road & Max Gillis Road													
Base	411	118	417	345	282	129	98	440	618	493	274	173	3798
Added	0	0	0	0	0	0	0	0	0	0	0	0	0
Total	411	118	417	345	282	129	98	440	618	493	274	173	3798
#17 Winchester Road - SR-79 & Max Gillis - Thompson													
Base	152	1324	38	127	2110	604	622	137	245	34	279	50	5722
Added	0	0	0	0	0	0	0	0	0	0	0	0	0
Total	152	1324	38	127	2110	604	622	137	245	34	279	50	5722
#18 California Oaks Road & Clinton Keith Road													
Base	216	0	542	0	0	0	0	2182	298	706	1680	0	5624
Added	0	0	0	0	0	0	0	0	0	0	0	0	0
Total	216	0	542	0	0	0	0	2182	298	706	1680	0	5624

City of Murrieta General Plan
Existing General Plan
AM Peak Hour

Volume Type	Northbound Left	Northbound Thru	Northbound Right	Southbound Left	Southbound Thru	Southbound Right	Eastbound Left	Eastbound Thru	Eastbound Right	Westbound Left	Westbound Thru	Westbound Right	Total Volume
#19 I-215 SB Off-Ramp & Clinton Keith Road													
Base	0	0	0	57	0	417	0	2167	509	0	1860	225	5235
Added	0	0	0	0	0	0	0	0	0	0	0	0	0
Total	0	0	0	57	0	417	0	2167	509	0	1860	225	5235
#20 I-215 NB Off Ramp & Clinton Keith Road													
Base	122	0	1233	0	0	0	0	1555	302	0	2136	265	5613
Added	0	0	0	0	0	0	0	0	0	0	0	0	0
Total	122	0	1233	0	0	0	0	1555	302	0	2136	265	5613
#21 Antelope Road & Clinton Keith Road													
Base	0	0	0	26	0	514	253	1768	0	0	1308	238	4107
Added	0	0	0	0	0	0	0	0	0	0	0	0	0
Total	0	0	0	26	0	514	253	1768	0	0	1308	238	4107
#22 Meadowlark Lane - Whitewood Road & Clinton Keith Road													
Base	0	0	0	0	0	0	0	0	0	0	0	0	0
Added	0	0	0	0	0	0	0	0	0	0	0	0	0
Total	0	0	0	0	0	0	0	0	0	0	0	0	0
#23 Liberty Road & Clinton Keith Road													
Base	14	0	72	0	0	0	0	1998	169	34	1999	0	4286
Added	0	0	0	0	0	0	0	0	0	0	0	0	0
Total	14	0	72	0	0	0	0	1998	169	34	1999	0	4286
#24 Leon Road & Clinton Keith Road													
Base	0	0	0	127	0	1180	461	1597	0	0	669	518	4552
Added	0	0	0	0	0	0	0	0	0	0	0	0	0
Total	0	0	0	127	0	1180	461	1597	0	0	669	518	4552
#25 Winchester Road - SR-79 & Benton Road													
Base	431	1337	332	86	1977	353	45	502	1122	316	514	30	7045
Added	0	0	0	0	0	0	0	0	0	0	0	0	0
Total	431	1337	332	86	1977	353	45	502	1122	316	514	30	7045
#26 Winchester Road - SR-79 & Via Mira Mosa													
Base	27	1572	841	331	2662	228	349	51	91	176	19	30	6377
Added	0	0	0	0	0	0	0	0	0	0	0	0	0
Total	27	1572	841	331	2662	228	349	51	91	176	19	30	6377
#27 Monroe Ave & Los Alamos													
Base	27	206	176	515	446	194	42	321	127	62	959	438	3513
Added	0	0	0	0	0	0	0	0	0	0	0	0	0
Total	27	206	176	515	446	194	42	321	127	62	959	438	3513

City of Murrieta General Plan
Existing General Plan
AM Peak Hour

Volume Type	Northbound Left	Thru	Right	Southbound Left	Thru	Right	Eastbound Left	Thru	Right	Westbound Left	Thru	Right	Total Volume
#28 Jefferson Avenue & Murrieta Hot Springs Road													
Base	13	981	579	815	1199	75	13	82	24	931	99	699	5510
Added	0	0	0	0	0	0	0	0	0	0	0	0	0
Total	13	981	579	815	1199	75	13	82	24	931	99	699	5510
#29 Madison Avenue & Murrieta Hot Springs Road													
Base	140	79	322	150	144	141	140	1141	260	647	1759	79	5002
Added	0	0	0	0	0	0	0	0	0	0	0	0	0
Total	140	79	322	150	144	141	140	1141	260	647	1759	79	5002
#30 I-15 SB Off-Ramp & Murrieta Hot Springs Road													
Base	0	0	0	813	0	394	0	1348	225	0	2235	47	5062
Added	0	0	0	0	0	0	0	0	0	0	0	0	0
Total	0	0	0	813	0	394	0	1348	225	0	2235	47	5062
#31 I-15 NB Off-Ramp & Murrieta Hot Springs Road													
Base	281	0	73	0	0	0	0	2144	181	0	1455	627	4761
Added	0	0	0	0	0	0	0	0	0	0	0	0	0
Total	281	0	73	0	0	0	0	2144	181	0	1455	627	4761
#32 I-215 SB Off-Ramp & Murrieta Hot Springs Road													
Base	0	0	0	541	0	438	0	1944	53	0	2529	378	5883
Added	0	0	0	0	0	0	0	0	0	0	0	0	0
Total	0	0	0	541	0	438	0	1944	53	0	2529	378	5883
#33 I-215 NB Off-Ramp & Murrieta Hot Springs Road													
Base	347	0	19	0	0	0	0	1588	115	0	2578	679	5326
Added	0	0	0	0	0	0	0	0	0	0	0	0	0
Total	347	0	19	0	0	0	0	1588	115	0	2578	679	5326
#34 Jackson Avenue & Murrieta Hot Springs Road													
Base	70	0	51	0	0	0	0	1218	43	159	2010	0	3551
Added	0	0	0	0	0	0	0	0	0	0	0	0	0
Total	70	0	51	0	0	0	0	1218	43	159	2010	0	3551
#35 Margarita Road & Murrieta Hot Springs Road													
Base	616	60	128	42	17	6	163	749	462	302	1723	71	4339
Added	0	0	0	0	0	0	0	0	0	0	0	0	0
Total	616	60	128	42	17	6	163	749	462	302	1723	71	4339
#36 French Valley Parkway & Murrieta Hot Springs Road													
Base	20	0	821	0	0	0	0	1224	277	723	1947	0	5012
Added	0	0	0	0	0	0	0	0	0	0	0	0	0
Total	20	0	821	0	0	0	0	1224	277	723	1947	0	5012

City of Murrieta General Plan
Existing General Plan
AM Peak Hour

Volume Type	Northbound Left	Thru	Right	Southbound Left	Thru	Right	Eastbound Left	Thru	Right	Westbound Left	Thru	Right	Total Volume
#37 Jefferson Avenue & Guava Street													
Base	26	1339	1	3	1360	322	190	55	105	2	33	9	3445
Added	0	0	0	0	0	0	0	0	0	0	0	0	0
Total	26	1339	1	3	1360	322	190	55	105	2	33	9	3445
#38 Jefferson Avenue & Cherry Street													
Base	0	0	0	0	0	0	0	0	0	0	0	0	0
Added	0	0	0	0	0	0	0	0	0	0	0	0	0
Total	0	0	0	0	0	0	0	0	0	0	0	0	0
#39 Washington Ave & Calle Del Oso Oro/Nutmeg													
Base	251	159	122	92	196	90	64	602	638	143	205	42	2604
Added	0	0	0	0	0	0	0	0	0	0	0	0	0
Total	251	159	122	92	196	90	64	602	638	143	205	42	2604
#40 Clinton Keith Rd & Calle de Oso Oro/Bear Creek Dr													
Base	58	108	274	5	112	197	266	612	147	410	614	22	2825
Added	0	0	0	0	0	0	0	0	0	0	0	0	0
Total	58	108	274	5	112	197	266	612	147	410	614	22	2825
#41 Jefferson Ave & Nutmeg St													
Base	0	0	0	0	0	0	0	0	0	0	0	0	0
Added	0	0	0	0	0	0	0	0	0	0	0	0	0
Total	0	0	0	0	0	0	0	0	0	0	0	0	0
#42 Jefferson Ave & Magnolia St													
Base	0	0	0	0	0	0	0	0	0	0	0	0	0
Added	0	0	0	0	0	0	0	0	0	0	0	0	0
Total	0	0	0	0	0	0	0	0	0	0	0	0	0
#43 Jefferson Ave & Lemon St													
Base	249	774	28	4	2426	152	30	3	251	6	10	6	3939
Added	0	0	0	0	0	0	0	0	0	0	0	0	0
Total	249	774	28	4	2426	152	30	3	251	6	10	6	3939
#44 Jefferson Ave & Kalmia St													
Base	260	903	245	860	1613	151	48	458	333	207	316	469	5863
Added	0	0	0	0	0	0	0	0	0	0	0	0	0
Total	260	903	245	860	1613	151	48	458	333	207	316	469	5863
#45 Jefferson Ave & Juniper St													
Base	257	1291	63	110	1943	82	74	96	112	13	92	36	4169
Added	0	0	0	0	0	0	0	0	0	0	0	0	0
Total	257	1291	63	110	1943	82	74	96	112	13	92	36	4169

City of Murrieta General Plan
Existing General Plan
AM Peak Hour

Volume Type	Northbound Left	Thru	Right	Southbound Left	Thru	Right	Eastbound Left	Thru	Right	Westbound Left	Thru	Right	Total Volume
#46 Jefferson Ave & Ivy St/Los Alamos Rd													
Base	140	1181	64	235	1748	49	59	75	135	289	68	366	4409
Added	0	0	0	0	0	0	0	0	0	0	0	0	0
Total	140	1181	64	235	1748	49	59	75	135	289	68	366	4409
#47 Madison Ave & Kalmia St													
Base	0	0	0	0	0	0	0	0	0	0	0	0	0
Added	0	0	0	0	0	0	0	0	0	0	0	0	0
Total	0	0	0	0	0	0	0	0	0	0	0	0	0
#48 Madison Ave/I-15 SB Ramps & Kalmia St													
Base	117	0	220	253	48	270	0	1352	212	340	1054	495	4361
Added	0	0	0	0	0	0	0	0	0	0	0	0	0
Total	117	0	220	253	48	270	0	1352	212	340	1054	495	4361
#49 Monroe Ave & Murrieta Hot Springs Rd													
Base	0	0	0	0	0	0	0	0	0	0	0	0	0
Added	0	0	0	0	0	0	0	0	0	0	0	0	0
Total	0	0	0	0	0	0	0	0	0	0	0	0	0
#50 Hancock Ave & Murrieta Hot Springs Rd													
Base	0	0	0	427	0	673	659	1554	0	0	2501	502	6316
Added	0	0	0	0	0	0	0	0	0	0	0	0	0
Total	0	0	0	427	0	673	659	1554	0	0	2501	502	6316
#51 Alta Murrieta Dr & Murrieta Hot Springs Rd													
Base	224	80	20	68	133	305	248	982	294	137	1863	162	4516
Added	0	0	0	0	0	0	0	0	0	0	0	0	0
Total	224	80	20	68	133	305	248	982	294	137	1863	162	4516
#52 Winchester Road - SR-79 & Murrieta Hot Springs Rd													
Base	292	1516	160	150	1534	1319	774	273	109	299	856	78	7360
Added	0	0	0	0	0	0	0	0	0	0	0	0	0
Total	292	1516	160	150	1534	1319	774	273	109	299	856	78	7360
#53 Hancock Ave & Los Alamos Rd													
Base	49	125	202	693	252	91	72	869	74	902	1617	602	5548
Added	0	0	0	0	0	0	0	0	0	0	0	0	0
Total	49	125	202	693	252	91	72	869	74	902	1617	602	5548
#54 I-215 SB Ramps & Los Alamos Rd													
Base	0	0	0	409	0	1895	0	1264	457	250	1470	0	5745
Added	0	0	0	0	0	0	0	0	0	0	0	0	0
Total	0	0	0	409	0	1895	0	1264	457	250	1470	0	5745

City of Murrieta General Plan
Existing General Plan
AM Peak Hour

Volume Type	Northbound Left	Thru	Right	Southbound Left	Thru	Right	Eastbound Left	Thru	Right	Westbound Left	Thru	Right	Total Volume
#55 I-215 NB Ramps & Los Alamos Rd													
Base	457	2	105	0	0	0	601	1028	0	0	1272	70	3535
Added	0	0	0	0	0	0	0	0	0	0	0	0	0
Total	457	2	105	0	0	0	601	1028	0	0	1272	70	3535
#56 Whitewood Rd & Los Alamos Rd													
Base	87	237	51	30	449	557	361	215	90	58	256	22	2413
Added	0	0	0	0	0	0	0	0	0	0	0	0	0
Total	87	237	51	30	449	557	361	215	90	58	256	22	2413
#57 Whitewood Rd & Murrieta Hot Springs Rd													
Base	57	203	255	250	541	107	25	996	138	486	2064	120	5242
Added	0	0	0	0	0	0	0	0	0	0	0	0	0
Total	57	203	255	250	541	107	25	996	138	486	2064	120	5242
#58 Adams Ave & Guava St													
Base	0	0	0	0	0	0	0	0	0	0	0	0	0
Added	0	0	0	0	0	0	0	0	0	0	0	0	0
Total	0	0	0	0	0	0	0	0	0	0	0	0	0
#59 Nutmeg St & Clinton Keith Rd													
Base	75	45	460	387	53	71	46	1690	94	366	1366	159	4812
Added	0	0	0	0	0	0	0	0	0	0	0	0	0
Total	75	45	460	387	53	71	46	1690	94	366	1366	159	4812
#60 Murrieta Oaks Ave-Mitchell Rd & Clinton Keith Rd													
Base	121	147	143	8	32	58	65	2553	302	120	2084	206	5839
Added	0	0	0	0	0	0	0	0	0	0	0	0	0
Total	121	147	143	8	32	58	65	2553	302	120	2084	206	5839
#61 I-215 SB Ramps & Scott Rd													
Base	0	0	0	170	0	148	0	858	475	0	906	293	2850
Added	0	0	0	0	0	0	0	0	0	0	0	0	0
Total	0	0	0	170	0	148	0	858	475	0	906	293	2850
#62 I-215 NB Ramps & Scott Rd													
Base	0	17	566	0	0	297	147	929	0	0	1002	336	3294
Added	0	0	0	0	0	0	0	0	0	0	0	0	0
Total	0	17	566	0	0	297	147	929	0	0	1002	336	3294
#102 Leon Road & Scott Road													
Base	97	182	2	96	285	526	401	448	344	8	376	161	2926
Added	0	0	0	0	0	0	0	0	0	0	0	0	0
Total	97	182	2	96	285	526	401	448	344	8	376	161	2926

City of Murrieta General Plan
Existing General Plan
AM Peak Hour

Volume Type	Northbound Left	Thru	Right	Southbound Left	Thru	Right	Eastbound Left	Thru	Right	Westbound Left	Thru	Right	Total Volume
#104 Antelope Road & Keller Road													
Base	55	39	269	159	297	298	400	711	831	633	511	33	4236
Added	0	0	0	0	0	0	0	0	0	0	0	0	0
Total	55	39	269	159	297	298	400	711	831	633	511	33	4236
#105 Menifee Road - Meadowlark Road & Keller Road													
Base	21	283	247	136	919	621	567	180	352	196	339	150	4011
Added	0	0	0	0	0	0	0	0	0	0	0	0	0
Total	21	283	247	136	919	621	567	180	352	196	339	150	4011
#107 Leon Road & Keller Road													
Base	125	309	11	2	570	122	4	66	182	3	33	2	1429
Added	0	0	0	0	0	0	0	0	0	0	0	0	0
Total	125	309	11	2	570	122	4	66	182	3	33	2	1429
#108 Winchester Road - SR-79 & Keller Road													
Base	0	1593	27	4	2559	1	1	9	1	12	10	49	4266
Added	0	0	0	0	0	0	0	0	0	0	0	0	0
Total	0	1593	27	4	2559	1	1	9	1	12	10	49	4266
#112 Leon Road & Jean Nicholas													
Base	7	180	126	186	503	47	2	175	16	161	26	231	1660
Added	0	0	0	0	0	0	0	0	0	0	0	0	0
Total	7	180	126	186	503	47	2	175	16	161	26	231	1660
#122 Meadowlark Lane - Whitewood Road & Clinton Keith Road													
Base	55	37	784	296	117	567	636	997	106	865	988	195	5643
Added	0	0	0	0	0	0	0	0	0	0	0	0	0
Total	55	37	784	296	117	567	636	997	106	865	988	195	5643
#138 Jefferson Avenue & Cherry Street													
Base	84	575	187	35	644	21	2	55	7	141	1237	800	3788
Added	0	0	0	0	0	0	0	0	0	0	0	0	0
Total	84	575	187	35	644	21	2	55	7	141	1237	800	3788
#141 Jefferson Ave & Nutmeg St													
Base	207	364	240	65	1665	61	97	182	544	369	171	66	4031
Added	0	0	0	0	0	0	0	0	0	0	0	0	0
Total	207	364	240	65	1665	61	97	182	544	369	171	66	4031
#142 Jefferson Ave & Magnolia St													
Base	84	676	8	7	2381	226	154	1	151	27	3	1	3719
Added	0	0	0	0	0	0	0	0	0	0	0	0	0
Total	84	676	8	7	2381	226	154	1	151	27	3	1	3719

City of Murrieta General Plan
Existing General Plan
AM Peak Hour

Volume Type	Northbound Left	Thru	Right	Southbound Left	Thru	Right	Eastbound Left	Thru	Right	Westbound Left	Thru	Right	Total Volume
#149 Monroe Ave & Murrieta Hot Springs Rd													
Base	40	79	48	1	36	77	113	1200	15	4	1576	26	3215
Added	0	0	0	0	0	0	0	0	0	0	0	0	0
Total	40	79	48	1	36	77	113	1200	15	4	1576	26	3215
#158 Adams Ave & Guava St													
Base	64	67	17	100	21	41	19	308	46	3	286	101	1073
Added	0	0	0	0	0	0	0	0	0	0	0	0	0
Total	64	67	17	100	21	41	19	308	46	3	286	101	1073

City of Murrieta General Plan
Existing General Plan
AM Peak Hour

Impact Analysis Report
Level Of Service

Intersection	Base LOS	Base Del/ Veh	Base V/ C	Future LOS	Future Del/ Veh	Future V/ C	Change in
# 1 Menifee Road & Scott Road	D	47.3	0.939	D	47.3	0.939	+ 0.000 D/V
# 3 Winchester Road/SR-79 & Scott	F	177.0	1.525	F	177.0	1.525	+ 0.000 D/V
# 6 Briggs Road & Keller Road	B	16.9	0.400	B	16.9	0.400	+ 0.000 D/V
# 9 Antelope Road & Golden City Dr	B	16.8	0.519	B	16.8	0.519	+ 0.000 D/V
# 10 Whitewood Roa - /Meadowlark Ro	D	37.0	0.921	D	37.0	0.921	+ 0.000 D/V
# 11 Briggs Road & Baxter Road - Je	B	11.0	0.134	B	11.0	0.134	+ 0.000 D/V
# 13 Winchester Road - SR-79 & Nich	B	18.8	0.796	B	18.8	0.796	+ 0.000 D/V
# 14 Antelope Road & Linnel Lane Ex	B	19.4	0.453	B	19.4	0.453	+ 0.000 D/V
# 15 Whitewood Road - Meadowlark Ro	B	10.1	0.506	B	10.1	0.506	+ 0.000 D/V
# 16 Leon Road & Max Gillis Road	D	38.0	0.873	D	38.0	0.873	+ 0.000 D/V
# 17 Winchester Road - SR-79 & Max	C	25.1	0.762	C	25.1	0.762	+ 0.000 D/V
# 18 California Oaks Road & Clinton	C	32.7	0.998	C	32.7	0.998	+ 0.000 D/V
# 19 I-215 SB Off-Ramp & Clinton Ke	A	8.2	0.564	A	8.2	0.564	+ 0.000 D/V
# 20 I-215 NB Off Ramp & Clinton Ke	F	83.2	1.175	F	83.2	1.175	+ 0.000 D/V
# 21 Antelope Road & Clinton Keith	A	4.3	0.385	A	4.3	0.385	+ 0.000 D/V
# 23 Liberty Road & Clinton Keith R	A	2.5	0.486	A	2.5	0.486	+ 0.000 D/V
# 24 Leon Road & Clinton Keith Road	B	19.3	0.736	B	19.3	0.736	+ 0.000 D/V
# 25 Winchester Road - SR-79 & Bent	D	41.0	0.989	D	41.0	0.989	+ 0.000 D/V
# 26 Winchester Road - SR-79 & Via	C	24.1	0.918	C	24.1	0.918	+ 0.000 D/V
# 27 Monroe Ave & Los Alamos	C	23.9	0.550	C	23.9	0.550	+ 0.000 D/V
# 28 Jefferson Avenue & Murrieta Ho	F	116.4	1.347	F	116.4	1.347	+ 0.000 D/V
# 29 Madison Avenue & Murrieta Hot	C	26.2	0.635	C	26.2	0.635	+ 0.000 D/V
# 30 I-15 SB Off-Ramp & Murrieta Ho	B	16.0	0.709	B	16.0	0.709	+ 0.000 D/V

Traffix 7.9.0215 (c) 2008 Dowling Assoc. Licensed to MMA, LONG BEACH, CA

City of Murrieta General Plan
Existing General Plan
AM Peak Hour

Intersection	Base LOS	Base Del/ Veh	Base V/ C	Future LOS	Future Del/ Veh	Future V/ C	Change in
# 31 I-15 NB Off-Ramp & Murrieta Ho	A	5.8	0.390	A	5.8	0.390	+ 0.000 D/V
# 32 I-215 SB Off-Ramp & Murrieta H	B	12.4	0.690	B	12.4	0.690	+ 0.000 D/V
# 33 I-215 NB Off-Ramp & Murrieta H	A	5.6	0.596	A	5.6	0.596	+ 0.000 D/V
# 34 Jackson Avenue & Murrieta Hot	A	5.3	0.407	A	5.3	0.407	+ 0.000 D/V
# 35 Margarita Road & Murrieta Hot	C	24.4	0.659	C	24.4	0.659	+ 0.000 D/V
# 36 French Valley Parkway & Murrie	B	12.7	0.709	B	12.7	0.709	+ 0.000 D/V
# 37 Jefferson Avenue & Guava Stree	A	9.8	0.489	A	9.8	0.489	+ 0.000 D/V
# 39 Washington Ave & Calle Del Oso	C	26.5	0.659	C	26.5	0.659	+ 0.000 D/V
# 40 Clinton Keith Rd & Calle de Os	C	21.5	0.914	C	21.5	0.914	+ 0.000 D/V
# 43 Jefferson Ave & Lemon St	B	18.2	0.798	B	18.2	0.798	+ 0.000 D/V
# 44 Jefferson Ave & Kalmia St	D	43.2	0.971	D	43.2	0.971	+ 0.000 D/V
# 45 Jefferson Ave & Juniper St	B	15.5	0.613	B	15.5	0.613	+ 0.000 D/V
# 46 Jefferson Ave & Ivy St/Los Ala	C	24.1	0.642	C	24.1	0.642	+ 0.000 D/V
# 48 Madison Ave/I-15 SB Ramps & Ka	C	29.0	0.533	C	29.0	0.533	+ 0.000 D/V
# 50 Hancock Ave & Murrieta Hot Spr	B	17.7	0.755	B	17.7	0.755	+ 0.000 D/V
# 51 Alta Murrieta Dr & Murrieta Ho	C	23.7	0.593	C	23.7	0.593	+ 0.000 D/V
# 52 Winchester Road - SR-79 & Murr	F	90.6	1.304	F	90.6	1.304	+ 0.000 D/V
# 53 Hancock Ave & Los Alamos Rd	E	64.0	1.085	E	64.0	1.085	+ 0.000 D/V
# 54 I-215 SB Ramps & Los Alamos Rd	E	58.3	1.051	E	58.3	1.051	+ 0.000 D/V
# 55 I-215 NB Ramps & Los Alamos Rd	C	26.1	0.820	C	26.1	0.820	+ 0.000 D/V
# 56 Whitewood Rd & Los Alamos Rd	C	26.5	0.671	C	26.5	0.671	+ 0.000 D/V
# 57 Whitewood Rd & Murrieta Hot Sp	C	27.8	0.785	C	27.8	0.785	+ 0.000 D/V
# 59 Nutmeg St & Clinton Keith Rd	E	60.8	1.059	E	60.8	1.059	+ 0.000 D/V
# 60 Murrieta Oaks Ave-Mitchell Rd	B	14.6	0.795	B	14.6	0.795	+ 0.000 D/V
# 61 I-215 SB Ramps & Scott Rd	A	7.3	0.223	A	7.3	0.223	+ 0.000 D/V

Traffix 7.9.0215 (c) 2008 Dowling Assoc. Licensed to MMA, LONG BEACH, CA

City of Murrieta General Plan
Existing General Plan
AM Peak Hour

Intersection	Base LOS	Base Del/ Veh	Base V/ C	Future LOS	Future Del/ Veh	Future V/ C	Change in
# 62 I-215 NB Ramps & Scott Rd	B	15.9	0.371	B	15.9	0.371	+ 0.000 D/V
#102 Leon Road & Scott Road	C	28.5	0.707	C	28.5	0.707	+ 0.000 D/V
#104 Antelope Road & Keller Road	E	66.4	1.120	E	66.4	1.120	+ 0.000 D/V
#105 Menifee Road - Meadowlark Road	C	30.6	0.790	C	30.6	0.790	+ 0.000 D/V
#107 Leon Road & Keller Road	B	16.6	0.307	B	16.6	0.307	+ 0.000 D/V
#108 Winchester Road - SR-79 & Kell	A	1.4	0.525	A	1.4	0.525	+ 0.000 D/V
#112 Leon Road & Jean Nicholas	C	23.0	0.342	C	23.0	0.342	+ 0.000 D/V
#122 Meadowlark Lane - Whitewood Ro	D	54.9	1.009	D	54.9	1.009	+ 0.000 D/V
#138 Jefferson Avenue & Cherry Stre	C	21.0	0.724	C	21.0	0.724	+ 0.000 D/V
#141 Jefferson Ave & Nutmeg St	D	52.0	0.993	D	52.0	0.993	+ 0.000 D/V
#142 Jefferson Ave & Magnolia St	B	10.4	0.665	B	10.4	0.665	+ 0.000 D/V
#149 Monroe Ave & Murrieta Hot Spri	A	7.9	0.327	A	7.9	0.327	+ 0.000 D/V
#158 Adams Ave & Guava St	B	11.5	0.293	B	11.5	0.293	+ 0.000 D/V

City of Murrieta General Plan
Existing General Plan
AM Peak Hour

Level Of Service Computation Report
2000 HCM Operations Method (Future Volume Alternative)

Intersection #1 Menifee Road & Scott Road

Cycle (sec): 100 Critical Vol./Cap.(X): 0.939
Loss Time (sec): 0 (Y+R=4.0 sec) Average Delay (sec/veh): 47.3
Optimal Cycle: 180 Level Of Service: D

Street Name:	Menifee Rd						Scott Rd					
Approach:	North Bound			South Bound			East Bound			West Bound		
Movement:	L -	T -	R	L -	T -	R	L -	T -	R	L -	T -	R
Control:	Protected			Protected			Protected			Protected		
Rights:	Include			Include			Include			Include		
Min. Green:	0	0	0	0	0	0	0	0	0	0	0	0
Lanes:	1 0	1	1 0	1 0	1	1 0	1 0	2	1 0	1 0	2	1 0
Volume Module:												
Base Vol:	280	408	428	238	638	89	99	499	248	719	508	258
Growth Adj:	1.00	1.00	1.00	1.00	1.00	1.00	1.00	1.00	1.00	1.00	1.00	1.00
Initial Bse:	280	408	428	238	638	89	99	499	248	719	508	258
Added Vol:	0	0	0	0	0	0	0	0	0	0	0	0
PasserByVol:	0	0	0	0	0	0	0	0	0	0	0	0
Initial Fut:	280	408	428	238	638	89	99	499	248	719	508	258
User Adj:	1.00	1.00	1.00	1.00	1.00	1.00	1.00	1.00	1.00	1.00	1.00	1.00
PHF Adj:	1.00	1.00	1.00	1.00	1.00	1.00	1.00	1.00	1.00	1.00	1.00	1.00
PHF Volume:	280	408	428	238	638	89	99	499	248	719	508	258
Reduct Vol:	0	0	0	0	0	0	0	0	0	0	0	0
Reduced Vol:	280	408	428	238	638	89	99	499	248	719	508	258
PCE Adj:	1.00	1.00	1.00	1.00	1.00	1.00	1.00	1.00	1.00	1.00	1.00	1.00
MLF Adj:	1.00	1.00	1.00	1.00	1.00	1.00	1.00	1.00	1.00	1.00	1.00	1.00
FinalVolume:	280	408	428	238	638	89	99	499	248	719	508	258
Saturation Flow Module:												
Sat/Lane:	1900	1900	1900	1900	1900	1900	1900	1900	1900	1900	1900	1900
Adjustment:	0.95	0.88	0.88	0.95	0.93	0.93	0.95	0.86	0.86	0.95	0.86	0.86
Lanes:	1.00	1.00	1.00	1.00	1.76	0.24	1.00	2.00	1.00	1.00	2.00	1.00
Final Sat.:	1805	1666	1666	1805	3111	434	1805	3292	1636	1805	3282	1641
Capacity Analysis Module:												
Vol/Sat:	0.16	0.24	0.26	0.13	0.21	0.21	0.05	0.15	0.15	0.40	0.15	0.16
Crit Moves:			****	****				****		****		
Green/Cycle:	0.18	0.27	0.27	0.14	0.24	0.24	0.15	0.16	0.16	0.42	0.43	0.43
Volume/Cap:	0.87	0.89	0.94	0.94	0.87	0.87	0.36	0.94	0.94	0.94	0.36	0.36
Delay/Veh:	61.5	46.0	52.7	82.6	46.5	46.5	38.9	60.1	60.1	46.7	19.0	19.1
User DelAdj:	1.00	1.00	1.00	1.00	1.00	1.00	1.00	1.00	1.00	1.00	1.00	1.00
AdjDel/Veh:	61.5	46.0	52.7	82.6	46.5	46.5	38.9	60.1	60.1	46.7	19.0	19.1
LOS by Move:	E	D	D	F	D	D	D	E	E	D	B	B
HCM2kAvgQ:	11	16	18	11	14	14	3	12	12	26	6	6

Note: Queue reported is the number of cars per lane.

City of Murrieta General Plan
Existing General Plan
AM Peak Hour

Level Of Service Computation Report
2000 HCM Operations Method (Future Volume Alternative)

Intersection #3 Winchester Road/SR-79 & Scott Road

Cycle (sec): 100 Critical Vol./Cap.(X): 1.525
Loss Time (sec): 0 (Y+R=4.0 sec) Average Delay (sec/veh): 177.0
Optimal Cycle: 180 Level Of Service: F

Street Name:	Winchester Road/SR-79						Scott Road					
Approach:	North Bound			South Bound			East Bound			West Bound		
Movement:	L - T - R			L - T - R			L - T - R			L - T - R		
Control:	Protected			Protected			Protected			Protected		
Rights:	Include			Include			Include			Include		
Min. Green:	0	0	0	0	0	0	0	0	0	0	0	0
Lanes:	1 0	2	1 0	1 0	2	1 0	1 0	2	1 0	1 0	2	1 0
Volume Module:												
Base Vol:	118	1449	54	935	2477	74	113	174	63	16	157	984
Growth Adj:	1.00	1.00	1.00	1.00	1.00	1.00	1.00	1.00	1.00	1.00	1.00	1.00
Initial Bse:	118	1449	54	935	2477	74	113	174	63	16	157	984
Added Vol:	0	0	0	0	0	0	0	0	0	0	0	0
PasserByVol:	0	0	0	0	0	0	0	0	0	0	0	0
Initial Fut:	118	1449	54	935	2477	74	113	174	63	16	157	984
User Adj:	1.00	1.00	1.00	1.00	1.00	1.00	1.00	1.00	1.00	1.00	1.00	1.00
PHF Adj:	1.00	1.00	1.00	1.00	1.00	1.00	1.00	1.00	1.00	1.00	1.00	1.00
PHF Volume:	118	1449	54	935	2477	74	113	174	63	16	157	984
Reduct Vol:	0	0	0	0	0	0	0	0	0	0	0	0
Reduced Vol:	118	1449	54	935	2477	74	113	174	63	16	157	984
PCE Adj:	1.00	1.00	1.00	1.00	1.00	1.00	1.00	1.00	1.00	1.00	1.00	1.00
MLF Adj:	1.00	1.00	1.00	1.00	1.00	1.00	1.00	1.00	1.00	1.00	1.00	1.00
FinalVolume:	118	1449	54	935	2477	74	113	174	63	16	157	984
Saturation Flow Module:												
Sat/Lane:	1900	1900	1900	1900	1900	1900	1900	1900	1900	1900	1900	1900
Adjustment:	0.95	0.91	0.91	0.95	0.91	0.91	0.95	0.87	0.87	0.95	0.79	0.79
Lanes:	1.00	2.89	0.11	1.00	2.91	0.09	1.00	2.20	0.80	1.00	2.00	1.00
Final Sat.:	1805	4976	185	1805	5016	150	1805	3656	1324	1805	3012	1506
Capacity Analysis Module:												
Vol/Sat:	0.07	0.29	0.29	0.52	0.49	0.49	0.06	0.05	0.05	0.01	0.05	0.65
Crit Moves:		****		****			****					****
Green/Cycle:	0.06	0.19	0.19	0.34	0.47	0.47	0.04	0.40	0.40	0.07	0.43	0.43
Volume/Cap:	1.05	1.53	1.53	1.53	1.05	1.05	1.53	0.12	0.12	0.12	0.12	1.53
Delay/Veh:	147.2	282	282.0	277.6	61.1	61.1	341.2	19.2	19.2	43.7	17.2	271.7
User DelAdj:	1.00	1.00	1.00	1.00	1.00	1.00	1.00	1.00	1.00	1.00	1.00	1.00
AdjDel/Veh:	147.2	282	282.0	277.6	61.1	61.1	341.2	19.2	19.2	43.7	17.2	271.7
LOS by Move:	F	F	F	F	E	E	F	B	B	D	B	F
HCM2kAvgQ:	8	42	42	69	40	40	10	2	2	1	2	79

Note: Queue reported is the number of cars per lane.

City of Murrieta General Plan
Existing General Plan
AM Peak Hour

Level Of Service Computation Report
2000 HCM Operations Method (Future Volume Alternative)

Intersection #6 Briggs Road & Keller Road

Cycle (sec): 100 Critical Vol./Cap.(X): 0.400
Loss Time (sec): 0 (Y+R=4.0 sec) Average Delay (sec/veh): 16.9
Optimal Cycle: 38 Level Of Service: B

Street Name:	Briggs Road						Keller Road					
Approach:	North Bound			South Bound			East Bound			West Bound		
Movement:	L - T - R			L - T - R			L - T - R			L - T - R		
Control:	Protected			Protected			Protected			Protected		
Rights:	Include			Include			Include			Include		
Min. Green:	0	0	0	0	0	0	0	0	0	0	0	0
Lanes:	1 0	1	1 0	1 0	1	1 0	1 0	1	1 0	1 0	1	1 0
Volume Module:												
Base Vol:	275	18	53	0	9	21	2	149	384	6	308	1
Growth Adj:	1.00	1.00	1.00	1.00	1.00	1.00	1.00	1.00	1.00	1.00	1.00	1.00
Initial Bse:	275	18	53	0	9	21	2	149	384	6	308	1
Added Vol:	0	0	0	0	0	0	0	0	0	0	0	0
PasserByVol:	0	0	0	0	0	0	0	0	0	0	0	0
Initial Fut:	275	18	53	0	9	21	2	149	384	6	308	1
User Adj:	1.00	1.00	1.00	1.00	1.00	1.00	1.00	1.00	1.00	1.00	1.00	1.00
PHF Adj:	1.00	1.00	1.00	1.00	1.00	1.00	1.00	1.00	1.00	1.00	1.00	1.00
PHF Volume:	275	18	53	0	9	21	2	149	384	6	308	1
Reduct Vol:	0	0	0	0	0	0	0	0	0	0	0	0
Reduced Vol:	275	18	53	0	9	21	2	149	384	6	308	1
PCE Adj:	1.00	1.00	1.00	1.00	1.00	1.00	1.00	1.00	1.00	1.00	1.00	1.00
MLF Adj:	1.00	1.00	1.00	1.00	1.00	1.00	1.00	1.00	1.00	1.00	1.00	1.00
FinalVolume:	275	18	53	0	9	21	2	149	384	6	308	1
Saturation Flow Module:												
Sat/Lane:	1900	1900	1900	1900	1900	1900	1900	1900	1900	1900	1900	1900
Adjustment:	0.95	0.84	0.84	1.00	0.85	0.85	0.95	0.85	0.85	0.95	0.95	0.95
Lanes:	1.00	1.00	1.00	1.00	1.00	1.00	1.00	1.00	1.00	1.00	1.99	0.01
Final Sat.:	1805	1603	1603	1900	1615	1615	1805	1610	1610	1805	3598	12
Capacity Analysis Module:												
Vol/Sat:	0.15	0.01	0.03	0.00	0.01	0.01	0.00	0.09	0.24	0.00	0.09	0.09
Crit Moves:	****				****				****	****		
Green/Cycle:	0.38	0.40	0.40	0.00	0.01	0.01	0.01	0.60	0.60	0.01	0.60	0.60
Volume/Cap:	0.40	0.03	0.08	0.00	0.40	0.93	0.14	0.16	0.40	0.40	0.14	0.14
Delay/Veh:	23.0	18.5	19.0	0.0	52.4	179.7	54.0	9.0	10.9	65.9	8.9	8.9
User DelAdj:	1.00	1.00	1.00	1.00	1.00	1.00	1.00	1.00	1.00	1.00	1.00	1.00
AdjDel/Veh:	23.0	18.5	19.0	0.0	52.4	179.7	54.0	9.0	10.9	65.9	8.9	8.9
LOS by Move:	C	B	B	A	D	F	D	A	B	E	A	A
HCM2kAvgQ:	6	0	1	0	1	2	0	2	7	1	2	2

Note: Queue reported is the number of cars per lane.

City of Murrieta General Plan
Existing General Plan
AM Peak Hour

Level Of Service Computation Report
2000 HCM Operations Method (Future Volume Alternative)

Intersection #9 Antelope Road & Golden City Drive - Baxter Road

Cycle (sec): 100 Critical Vol./Cap.(X): 0.519
Loss Time (sec): 0 (Y+R=4.0 sec) Average Delay (sec/veh): 16.8
Optimal Cycle: 30 Level Of Service: B

Street Name:	Antelope Road						Golden City Drive - Baxter Road					
Approach:	North Bound			South Bound			East Bound			West Bound		
Movement:	L - T - R			L - T - R			L - T - R			L - T - R		
Control:	Permitted			Permitted			Permitted			Permitted		
Rights:	Include			Include			Include			Include		
Min. Green:	0	0	0	0	0	0	0	0	0	0	0	0
Lanes:	1 0	1 1	0	1 0	1 1	0	1 0	1 1	0	1 0	1 1	0
Volume Module:												
Base Vol:	1	51	319	215	808	22	0	33	6	377	209	402
Growth Adj:	1.00	1.00	1.00	1.00	1.00	1.00	1.00	1.00	1.00	1.00	1.00	1.00
Initial Bse:	1	51	319	215	808	22	0	33	6	377	209	402
Added Vol:	0	0	0	0	0	0	0	0	0	0	0	0
PasserByVol:	0	0	0	0	0	0	0	0	0	0	0	0
Initial Fut:	1	51	319	215	808	22	0	33	6	377	209	402
User Adj:	1.00	1.00	1.00	1.00	1.00	1.00	1.00	1.00	1.00	1.00	1.00	1.00
PHF Adj:	1.00	1.00	1.00	1.00	1.00	1.00	1.00	1.00	1.00	1.00	1.00	1.00
PHF Volume:	1	51	319	215	808	22	0	33	6	377	209	402
Reduct Vol:	0	0	0	0	0	0	0	0	0	0	0	0
Reduced Vol:	1	51	319	215	808	22	0	33	6	377	209	402
PCE Adj:	1.00	1.00	1.00	1.00	1.00	1.00	1.00	1.00	1.00	1.00	1.00	1.00
MLF Adj:	1.00	1.00	1.00	1.00	1.00	1.00	1.00	1.00	1.00	1.00	1.00	1.00
FinalVolume:	1	51	319	215	808	22	0	33	6	377	209	402
Saturation Flow Module:												
Sat/Lane:	1900	1900	1900	1900	1900	1900	1900	1900	1900	1900	1900	1900
Adjustment:	0.22	0.83	0.83	0.46	0.95	0.95	1.00	0.93	0.93	0.73	0.86	0.86
Lanes:	1.00	1.00	1.00	1.00	1.95	0.05	1.00	1.69	0.31	1.00	1.00	1.00
Final Sat.:	410	1572	1572	874	3500	95	1900	2984	543	1381	1626	1626
Capacity Analysis Module:												
Vol/Sat:	0.00	0.03	0.20	0.25	0.23	0.23	0.00	0.01	0.01	0.27	0.13	0.25
Crit Moves:				****						****		
Green/Cycle:	0.47	0.47	0.47	0.47	0.47	0.47	0.00	0.53	0.53	0.53	0.53	0.53
Volume/Cap:	0.01	0.07	0.43	0.52	0.49	0.49	0.00	0.02	0.02	0.52	0.24	0.47
Delay/Veh:	13.9	14.3	17.7	19.5	18.2	18.2	0.0	11.4	11.4	16.1	12.9	15.2
User DelAdj:	1.00	1.00	1.00	1.00	1.00	1.00	1.00	1.00	1.00	1.00	1.00	1.00
AdjDel/Veh:	13.9	14.3	17.7	19.5	18.2	18.2	0.0	11.4	11.4	16.1	12.9	15.2
LOS by Move:	B	B	B	B	B	B	A	B	B	B	B	B
HCM2kAvgQ:	0	1	7	5	9	9	0	0	0	8	4	8

Note: Queue reported is the number of cars per lane.

City of Murrieta General Plan
Existing General Plan
AM Peak Hour

Level Of Service Computation Report
2000 HCM Operations Method (Future Volume Alternative)

Intersection #10 Whitewood Roa - /Meadowlark Road & Golden City Drive - Baxter R

Cycle (sec): 100 Critical Vol./Cap.(X): 0.921
Loss Time (sec): 0 (Y+R=4.0 sec) Average Delay (sec/veh): 37.0
Optimal Cycle: 180 Level Of Service: D

Street Name:	Whitewood Road - Meadowlark Road						Golden City Drive - Baxter Road					
Approach:	North Bound			South Bound			East Bound			West Bound		
Movement:	L - T - R			L - T - R			L - T - R			L - T - R		
Control:	Protected			Protected			Protected			Protected		
Rights:	Include			Include			Include			Include		
Min. Green:	0	0	0	0	0	0	0	0	0	0	0	0
Lanes:	1 0	1 1	0	1 0	1 1	0	1 0	1 1	0	1 0	1 1	0
Volume Module:												
Base Vol:	297	407	3	0	872	639	19	3	475	1	15	1
Growth Adj:	1.00	1.00	1.00	1.00	1.00	1.00	1.00	1.00	1.00	1.00	1.00	1.00
Initial Bse:	297	407	3	0	872	639	19	3	475	1	15	1
Added Vol:	0	0	0	0	0	0	0	0	0	0	0	0
PasserByVol:	0	0	0	0	0	0	0	0	0	0	0	0
Initial Fut:	297	407	3	0	872	639	19	3	475	1	15	1
User Adj:	1.00	1.00	1.00	1.00	1.00	1.00	1.00	1.00	1.00	1.00	1.00	1.00
PHF Adj:	1.00	1.00	1.00	1.00	1.00	1.00	1.00	1.00	1.00	1.00	1.00	1.00
PHF Volume:	297	407	3	0	872	639	19	3	475	1	15	1
Reduct Vol:	0	0	0	0	0	0	0	0	0	0	0	0
Reduced Vol:	297	407	3	0	872	639	19	3	475	1	15	1
PCE Adj:	1.00	1.00	1.00	1.00	1.00	1.00	1.00	1.00	1.00	1.00	1.00	1.00
MLF Adj:	1.00	1.00	1.00	1.00	1.00	1.00	1.00	1.00	1.00	1.00	1.00	1.00
FinalVolume:	297	407	3	0	872	639	19	3	475	1	15	1
Saturation Flow Module:												
Sat/Lane:	1900	1900	1900	1900	1900	1900	1900	1900	1900	1900	1900	1900
Adjustment:	0.95	0.95	0.95	1.00	0.89	0.89	0.95	0.81	0.81	0.95	0.94	0.94
Lanes:	1.00	1.99	0.01	1.00	1.15	0.85	1.00	1.00	1.00	1.00	1.88	0.12
Final Sat.:	1805	3580	26	1900	1952	1430	1805	1536	1536	1805	3354	224
Capacity Analysis Module:												
Vol/Sat:	0.16	0.11	0.11	0.00	0.45	0.45	0.01	0.00	0.31	0.00	0.00	0.00
Crit Moves:	****				****				****	****		
Green/Cycle:	0.18	0.66	0.66	0.00	0.49	0.49	0.24	0.34	0.34	0.00	0.10	0.10
Volume/Cap:	0.92	0.17	0.17	0.00	0.92	0.92	0.04	0.01	0.92	0.92	0.04	0.04
Delay/Veh:	70.9	6.4	6.4	0.0	32.9	32.9	29.5	22.1	53.8	807.2	40.7	40.7
User DelAdj:	1.00	1.00	1.00	1.00	1.00	1.00	1.00	1.00	1.00	1.00	1.00	1.00
AdjDel/Veh:	70.9	6.4	6.4	0.0	32.9	32.9	29.5	22.1	53.8	807.2	40.7	40.7
LOS by Move:	E	A	A	A	C	C	C	C	D	F	D	D
HCM2kAvgQ:	13	2	2	0	27	27	0	0	19	0	0	0

Note: Queue reported is the number of cars per lane.

City of Murrieta General Plan
Existing General Plan
AM Peak Hour

Level Of Service Computation Report
2000 HCM Operations Method (Future Volume Alternative)

Intersection #11 Briggs Road & Baxter Road - Jean Nicholas

Cycle (sec): 100 | Critical Vol./Cap.(X): 0.134
Loss Time (sec): 0 (Y+R=4.0 sec) | Average Delay (sec/veh): 11.0
Optimal Cycle: 26 | Level Of Service: B

Street Name:	Briggs Road						Baxter Road - Jean Nicholas					
Approach:	North Bound			South Bound			East Bound			West Bound		
Movement:	L	T	R	L	T	R	L	T	R	L	T	R
Control:	Protected			Protected			Protected			Protected		
Rights:	Include			Include			Include			Include		
Min. Green:	0	0	0	0	0	0	0	0	0	0	0	0
Lanes:	0	0 1	1 0	1	0 2	0 0	0	0 0	0 0	1	0 0	0 1
Volume Module:												
Base Vol:	0	151	27	60	363	0	0	0	0	2	0	54
Growth Adj:	1.00	1.00	1.00	1.00	1.00	1.00	1.00	1.00	1.00	1.00	1.00	1.00
Initial Bse:	0	151	27	60	363	0	0	0	0	2	0	54
Added Vol:	0	0	0	0	0	0	0	0	0	0	0	0
PasserByVol:	0	0	0	0	0	0	0	0	0	0	0	0
Initial Fut:	0	151	27	60	363	0	0	0	0	2	0	54
User Adj:	1.00	1.00	1.00	1.00	1.00	1.00	1.00	1.00	1.00	1.00	1.00	1.00
PHF Adj:	1.00	1.00	1.00	1.00	1.00	1.00	1.00	1.00	1.00	1.00	1.00	1.00
PHF Volume:	0	151	27	60	363	0	0	0	0	2	0	54
Reduct Vol:	0	0	0	0	0	0	0	0	0	0	0	0
Reduced Vol:	0	151	27	60	363	0	0	0	0	2	0	54
PCE Adj:	1.00	1.00	1.00	1.00	1.00	1.00	1.00	1.00	1.00	1.00	1.00	1.00
MLF Adj:	1.00	1.00	1.00	1.00	1.00	1.00	1.00	1.00	1.00	1.00	1.00	1.00
FinalVolume:	0	151	27	60	363	0	0	0	0	2	0	54
Saturation Flow Module:												
Sat/Lane:	1900	1900	1900	1900	1900	1900	1900	1900	1900	1900	1900	1900
Adjustment:	1.00	0.93	0.93	0.95	0.95	1.00	1.00	1.00	1.00	0.95	1.00	0.85
Lanes:	0.00	1.70	0.30	1.00	2.00	0.00	0.00	0.00	0.00	1.00	0.00	1.00
Final Sat.:	0	2992	535	1805	3610	0	0	0	0	1805	0	1615
Capacity Analysis Module:												
Vol/Sat:	0.00	0.05	0.05	0.03	0.10	0.00	0.00	0.00	0.00	0.00	0.00	0.03
Crit Moves:	****				****							****
Green/Cycle:	0.00	0.45	0.45	0.30	0.75	0.00	0.00	0.00	0.00	0.25	0.00	0.25
Volume/Cap:	0.00	0.11	0.11	0.11	0.13	0.00	0.00	0.00	0.00	0.00	0.00	0.13
Delay/Veh:	0.0	15.8	15.8	25.6	3.5	0.0	0.0	0.0	0.0	28.2	0.0	29.3
User DelAdj:	1.00	1.00	1.00	1.00	1.00	1.00	1.00	1.00	1.00	1.00	1.00	1.00
AdjDel/Veh:	0.0	15.8	15.8	25.6	3.5	0.0	0.0	0.0	0.0	28.2	0.0	29.3
LOS by Move:	A	B	B	C	A	A	A	A	A	C	A	C
HCM2kAvgQ:	0	2	2	1	2	0	0	0	0	0	0	1

Note: Queue reported is the number of cars per lane.

City of Murrieta General Plan
Existing General Plan
AM Peak Hour

Level Of Service Computation Report
2000 HCM Operations Method (Future Volume Alternative)

Intersection #13 Winchester Road - SR-79 & Nicholas - Skyview

Cycle (sec): 100 | Critical Vol./Cap.(X): 0.796
Loss Time (sec): 0 (Y+R=4.0 sec) | Average Delay (sec/veh): 18.8
Optimal Cycle: 112 | Level Of Service: B

Street Name:	Winchester Road - SR-79						Nicholas - Skyview					
Approach:	North Bound			South Bound			East Bound			West Bound		
Movement:	L	T	R	L	T	R	L	T	R	L	T	R
Control:	Protected			Protected			Protected			Protected		
Rights:	Include			Include			Include			Include		
Min. Green:	0	0	0	0	0	0	0	0	0	0	0	0
Lanes:	1	0 2	1 0	1	0 2	1 0	1	0 1	1 0	1	0 1	1 0
Volume Module:												
Base Vol:	134	1425	334	18	2705	26	35	297	138	123	322	173
Growth Adj:	1.00	1.00	1.00	1.00	1.00	1.00	1.00	1.00	1.00	1.00	1.00	1.00
Initial Bse:	134	1425	334	18	2705	26	35	297	138	123	322	173
Added Vol:	0	0	0	0	0	0	0	0	0	0	0	0
PasserByVol:	0	0	0	0	0	0	0	0	0	0	0	0
Initial Fut:	134	1425	334	18	2705	26	35	297	138	123	322	173
User Adj:	1.00	1.00	1.00	1.00	1.00	1.00	1.00	1.00	1.00	1.00	1.00	1.00
PHF Adj:	1.00	1.00	1.00	1.00	1.00	1.00	1.00	1.00	1.00	1.00	1.00	1.00
PHF Volume:	134	1425	334	18	2705	26	35	297	138	123	322	173
Reduct Vol:	0	0	0	0	0	0	0	0	0	0	0	0
Reduced Vol:	134	1425	334	18	2705	26	35	297	138	123	322	173
PCE Adj:	1.00	1.00	1.00	1.00	1.00	1.00	1.00	1.00	1.00	1.00	1.00	1.00
MLF Adj:	1.00	1.00	1.00	1.00	1.00	1.00	1.00	1.00	1.00	1.00	1.00	1.00
FinalVolume:	134	1425	334	18	2705	26	35	297	138	123	322	173
Saturation Flow Module:												
Sat/Lane:	1900	1900	1900	1900	1900	1900	1900	1900	1900	1900	1900	1900
Adjustment:	0.95	0.88	0.88	0.95	0.91	0.91	0.95	0.90	0.90	0.95	0.90	0.90
Lanes:	1.00	2.43	0.57	1.00	2.97	0.03	1.00	1.37	0.63	1.00	1.30	0.70
Final Sat.:	1805	4084	957	1805	5132	49	1805	2346	1090	1805	2226	1196
Capacity Analysis Module:												
Vol/Sat:	0.07	0.35	0.35	0.01	0.53	0.53	0.02	0.13	0.13	0.07	0.14	0.14
Crit Moves:	****				****			****		****		
Green/Cycle:	0.09	0.73	0.73	0.02	0.66	0.66	0.03	0.16	0.16	0.09	0.22	0.22
Volume/Cap:	0.80	0.48	0.48	0.48	0.80	0.80	0.67	0.80	0.80	0.80	0.67	0.67
Delay/Veh:	67.0	5.5	5.5	57.5	13.4	13.4	77.0	48.5	48.5	69.1	38.4	38.4
User DelAdj:	1.00	1.00	1.00	1.00	1.00	1.00	1.00	1.00	1.00	1.00	1.00	1.00
AdjDel/Veh:	67.0	5.5	5.5	57.5	13.4	13.4	77.0	48.5	48.5	69.1	38.4	38.4
LOS by Move:	E	A	A	E	B	B	E	D	D	E	D	D
HCM2kAvgQ:	6	8	8	1	23	23	2	9	9	6	8	8

Note: Queue reported is the number of cars per lane.

City of Murrieta General Plan
Existing General Plan
AM Peak Hour

Level Of Service Computation Report
2000 HCM Operations Method (Future Volume Alternative)

Intersection #14 Antelope Road & Linnel Lane Extension

Cycle (sec): 100 Critical Vol./Cap.(X): 0.453
Loss Time (sec): 0 (Y+R=4.0 sec) Average Delay (sec/veh): 19.4
Optimal Cycle: 42 Level Of Service: B

Street Name:	Antelope Road						Linnel Lane Extension					
Approach:	North Bound			South Bound			East Bound			West Bound		
Movement:	L -	T -	R	L -	T -	R	L -	T -	R	L -	T -	R
Control:	Protected			Protected			Protected			Protected		
Rights:	Include			Include			Include			Include		
Min. Green:	0	0	0	0	0	0	0	0	0	0	0	0
Lanes:	1 0	1	1 0	1 0	1	1 0	1 0	1	1 0	1 0	1	1 0
Volume Module:												
Base Vol:	23	400	60	37	522	364	65	197	137	18	258	220
Growth Adj:	1.00	1.00	1.00	1.00	1.00	1.00	1.00	1.00	1.00	1.00	1.00	1.00
Initial Bse:	23	400	60	37	522	364	65	197	137	18	258	220
Added Vol:	0	0	0	0	0	0	0	0	0	0	0	0
PasserByVol:	0	0	0	0	0	0	0	0	0	0	0	0
Initial Fut:	23	400	60	37	522	364	65	197	137	18	258	220
User Adj:	1.00	1.00	1.00	1.00	1.00	1.00	1.00	1.00	1.00	1.00	1.00	1.00
PHF Adj:	1.00	1.00	1.00	1.00	1.00	1.00	1.00	1.00	1.00	1.00	1.00	1.00
PHF Volume:	23	400	60	37	522	364	65	197	137	18	258	220
Reduct Vol:	0	0	0	0	0	0	0	0	0	0	0	0
Reduced Vol:	23	400	60	37	522	364	65	197	137	18	258	220
PCE Adj:	1.00	1.00	1.00	1.00	1.00	1.00	1.00	1.00	1.00	1.00	1.00	1.00
MLF Adj:	1.00	1.00	1.00	1.00	1.00	1.00	1.00	1.00	1.00	1.00	1.00	1.00
FinalVolume:	23	400	60	37	522	364	65	197	137	18	258	220
Saturation Flow Module:												
Sat/Lane:	1900	1900	1900	1900	1900	1900	1900	1900	1900	1900	1900	1900
Adjustment:	0.95	0.93	0.93	0.95	0.89	0.89	0.95	0.89	0.89	0.95	0.88	0.88
Lanes:	1.00	1.74	0.26	1.00	1.18	0.82	1.00	1.18	0.82	1.00	1.08	0.92
Final Sat.:	1805	3079	462	1805	1995	1391	1805	1999	1390	1805	1814	1547
Capacity Analysis Module:												
Vol/Sat:	0.01	0.13	0.13	0.02	0.26	0.26	0.04	0.10	0.10	0.01	0.14	0.14
Crit Moves:	****				****		****				****	
Green/Cycle:	0.03	0.52	0.52	0.08	0.58	0.58	0.08	0.36	0.36	0.04	0.31	0.31
Volume/Cap:	0.45	0.25	0.25	0.25	0.45	0.45	0.45	0.28	0.28	0.28	0.45	0.45
Delay/Veh:	54.1	13.1	13.1	43.8	12.2	12.2	46.2	23.0	23.0	49.2	27.7	27.7
User DelAdj:	1.00	1.00	1.00	1.00	1.00	1.00	1.00	1.00	1.00	1.00	1.00	1.00
AdjDel/Veh:	54.1	13.1	13.1	43.8	12.2	12.2	46.2	23.0	23.0	49.2	27.7	27.7
LOS by Move:	D	B	B	D	B	B	D	C	C	D	C	C
HCM2kAvgQ:	1	4	4	1	8	8	2	4	4	1	6	6

Note: Queue reported is the number of cars per lane.

City of Murrieta General Plan
Existing General Plan
AM Peak Hour

Level Of Service Computation Report
2000 HCM Operations Method (Future Volume Alternative)

Intersection #15 Whitewood Road - Meadowlark Road & Linnel Lane Extension

Cycle (sec): 100 Critical Vol./Cap.(X): 0.506
Loss Time (sec): 0 (Y+R=4.0 sec) Average Delay (sec/veh): 10.1
Optimal Cycle: 46 Level Of Service: B

Street Name:	Whitewood Road - Meadowlark Road						Linnel Lane Extension (Future)					
Approach:	North Bound			South Bound			East Bound			West Bound		
Movement:	L -	T -	R	L -	T -	R	L -	T -	R	L -	T -	R
Control:	Protected			Protected			Protected			Protected		
Rights:	Include			Include			Include			Include		
Min. Green:	0	0	0	0	0	0	0	0	0	0	0	0
Lanes:	1 0	1	1 0	1 0	1	1 0	1 0	1	1 0	1 0	1	1 0
Volume Module:												
Base Vol:	28	665	5	3	813	454	97	13	184	1	14	16
Growth Adj:	1.00	1.00	1.00	1.00	1.00	1.00	1.00	1.00	1.00	1.00	1.00	1.00
Initial Bse:	28	665	5	3	813	454	97	13	184	1	14	16
Added Vol:	0	0	0	0	0	0	0	0	0	0	0	0
PasserByVol:	0	0	0	0	0	0	0	0	0	0	0	0
Initial Fut:	28	665	5	3	813	454	97	13	184	1	14	16
User Adj:	1.00	1.00	1.00	1.00	1.00	1.00	1.00	1.00	1.00	1.00	1.00	1.00
PHF Adj:	1.00	1.00	1.00	1.00	1.00	1.00	1.00	1.00	1.00	1.00	1.00	1.00
PHF Volume:	28	665	5	3	813	454	97	13	184	1	14	16
Reduct Vol:	0	0	0	0	0	0	0	0	0	0	0	0
Reduced Vol:	28	665	5	3	813	454	97	13	184	1	14	16
PCE Adj:	1.00	1.00	1.00	1.00	1.00	1.00	1.00	1.00	1.00	1.00	1.00	1.00
MLF Adj:	1.00	1.00	1.00	1.00	1.00	1.00	1.00	1.00	1.00	1.00	1.00	1.00
FinalVolume:	28	665	5	3	813	454	97	13	184	1	14	16
Saturation Flow Module:												
Sat/Lane:	1900	1900	1900	1900	1900	1900	1900	1900	1900	1900	1900	1900
Adjustment:	0.95	0.95	0.95	0.95	0.90	0.90	0.95	0.82	0.82	0.95	0.87	0.87
Lanes:	1.00	1.99	0.01	1.00	1.28	0.72	1.00	1.00	1.00	1.00	1.00	1.00
Final Sat.:	1805	3579	27	1805	2191	1224	1805	1552	1552	1805	1661	1661
Capacity Analysis Module:												
Vol/Sat:	0.02	0.19	0.19	0.00	0.37	0.37	0.05	0.01	0.12	0.00	0.01	0.01
Crit Moves:	****				****				****	****		
Green/Cycle:	0.03	0.76	0.76	0.01	0.73	0.73	0.20	0.23	0.23	0.00	0.04	0.04
Volume/Cap:	0.51	0.25	0.25	0.25	0.51	0.51	0.27	0.04	0.51	0.51	0.24	0.27
Delay/Veh:	55.1	3.7	3.7	59.6	5.8	5.8	34.2	29.6	34.3	183.2	47.8	48.2
User DelAdj:	1.00	1.00	1.00	1.00	1.00	1.00	1.00	1.00	1.00	1.00	1.00	1.00
AdjDel/Veh:	55.1	3.7	3.7	59.6	5.8	5.8	34.2	29.6	34.3	183.2	47.8	48.2
LOS by Move:	E	A	A	E	A	A	C	C	C	F	D	D
HCM2kAvgQ:	2	3	3	0	9	9	3	0	6	0	1	1

Note: Queue reported is the number of cars per lane.

City of Murrieta General Plan
Existing General Plan
AM Peak Hour

Level Of Service Computation Report
2000 HCM Operations Method (Future Volume Alternative)

Intersection #16 Leon Road & Max Gillis Road

Cycle (sec): 100 Critical Vol./Cap.(X): 0.873
Loss Time (sec): 0 (Y+R=4.0 sec) Average Delay (sec/veh): 38.0
Optimal Cycle: 179 Level Of Service: D

Street Name:	Leon Road						Max Gillis Road					
Approach:	North Bound			South Bound			East Bound			West Bound		
Movement:	L - T - R			L - T - R			L - T - R			L - T - R		
Control:	Protected			Protected			Protected			Protected		
Rights:	Include			Include			Include			Include		
Min. Green:	0	0	0	0	0	0	0	0	0	0	0	0
Lanes:	2 0	2 0	1	2 0	1 1	0	2 0	1 1	0	2 0	1 0	1
Volume Module:												
Base Vol:	411	118	417	345	282	129	98	440	618	493	274	173
Growth Adj:	1.00	1.00	1.00	1.00	1.00	1.00	1.00	1.00	1.00	1.00	1.00	1.00
Initial Bse:	411	118	417	345	282	129	98	440	618	493	274	173
Added Vol:	0	0	0	0	0	0	0	0	0	0	0	0
PasserByVol:	0	0	0	0	0	0	0	0	0	0	0	0
Initial Fut:	411	118	417	345	282	129	98	440	618	493	274	173
User Adj:	1.00	1.00	1.00	1.00	1.00	1.00	1.00	1.00	1.00	1.00	1.00	1.00
PHF Adj:	1.00	1.00	1.00	1.00	1.00	1.00	1.00	1.00	1.00	1.00	1.00	1.00
PHF Volume:	411	118	417	345	282	129	98	440	618	493	274	173
Reduct Vol:	0	0	0	0	0	0	0	0	0	0	0	0
Reduced Vol:	411	118	417	345	282	129	98	440	618	493	274	173
PCE Adj:	1.00	1.00	1.00	1.00	1.00	1.00	1.00	1.00	1.00	1.00	1.00	1.00
MLF Adj:	1.00	1.00	1.00	1.00	1.00	1.00	1.00	1.00	1.00	1.00	1.00	1.00
FinalVolume:	411	118	417	345	282	129	98	440	618	493	274	173
Saturation Flow Module:												
Sat/Lane:	1900	1900	1900	1900	1900	1900	1900	1900	1900	1900	1900	1900
Adjustment:	0.92	0.95	0.85	0.92	0.91	0.91	0.92	0.87	0.87	0.92	1.00	0.85
Lanes:	2.00	2.00	1.00	2.00	1.37	0.63	2.00	1.00	1.00	2.00	1.00	1.00
Final Sat.:	3502	3610	1615	3502	2361	1080	3502	1646	1646	3502	1900	1615
Capacity Analysis Module:												
Vol/Sat:	0.12	0.03	0.26	0.10	0.12	0.12	0.03	0.27	0.38	0.14	0.14	0.11
Crit Moves:			****	****					****	****		
Green/Cycle:	0.20	0.30	0.30	0.11	0.21	0.21	0.10	0.43	0.43	0.16	0.50	0.50
Volume/Cap:	0.58	0.11	0.87	0.87	0.58	0.58	0.29	0.62	0.87	0.87	0.29	0.22
Delay/Veh:	37.2	25.7	49.5	62.4	37.0	37.0	42.5	22.9	33.2	54.9	15.1	14.4
User DelAdj:	1.00	1.00	1.00	1.00	1.00	1.00	1.00	1.00	1.00	1.00	1.00	1.00
AdjDel/Veh:	37.2	25.7	49.5	62.4	37.0	37.0	42.5	22.9	33.2	54.9	15.1	14.4
LOS by Move:	D	C	D	E	D	D	D	C	C	D	B	B
HCM2kAvgQ:	7	1	15	8	7	7	2	12	21	11	5	3

Note: Queue reported is the number of cars per lane.

City of Murrieta General Plan
Existing General Plan
AM Peak Hour

Level Of Service Computation Report
2000 HCM Operations Method (Future Volume Alternative)

Intersection #17 Winchester Road - SR-79 & Max Gillis - Thompson

Cycle (sec): 100 Critical Vol./Cap.(X): 0.762
Loss Time (sec): 0 (Y+R=4.0 sec) Average Delay (sec/veh): 25.1
Optimal Cycle: 96 Level Of Service: C

Street Name:	Winchester Road - SR-79						Max Gillis - Thompson					
Approach:	North Bound			South Bound			East Bound			West Bound		
Movement:	L - T - R			L - T - R			L - T - R			L - T - R		
Control:	Protected			Protected			Protected			Protected		
Rights:	Include			Include			Include			Include		
Min. Green:	0	0	0	0	0	0	0	0	0	0	0	0
Lanes:	1 0	2 1	0	1 0	3 0	1	2 0	2 0	1	1 0	1 1	0
Volume Module:												
Base Vol:	152	1324	38	127	2110	604	622	137	245	34	279	50
Growth Adj:	1.00	1.00	1.00	1.00	1.00	1.00	1.00	1.00	1.00	1.00	1.00	1.00
Initial Bse:	152	1324	38	127	2110	604	622	137	245	34	279	50
Added Vol:	0	0	0	0	0	0	0	0	0	0	0	0
PasserByVol:	0	0	0	0	0	0	0	0	0	0	0	0
Initial Fut:	152	1324	38	127	2110	604	622	137	245	34	279	50
User Adj:	1.00	1.00	1.00	1.00	1.00	1.00	1.00	1.00	1.00	1.00	1.00	1.00
PHF Adj:	1.00	1.00	1.00	1.00	1.00	1.00	1.00	1.00	1.00	1.00	1.00	1.00
PHF Volume:	152	1324	38	127	2110	604	622	137	245	34	279	50
Reduct Vol:	0	0	0	0	0	0	0	0	0	0	0	0
Reduced Vol:	152	1324	38	127	2110	604	622	137	245	34	279	50
PCE Adj:	1.00	1.00	1.00	1.00	1.00	1.00	1.00	1.00	1.00	1.00	1.00	1.00
MLF Adj:	1.00	1.00	1.00	1.00	1.00	1.00	1.00	1.00	1.00	1.00	1.00	1.00
FinalVolume:	152	1324	38	127	2110	604	622	137	245	34	279	50
Saturation Flow Module:												
Sat/Lane:	1900	1900	1900	1900	1900	1900	1900	1900	1900	1900	1900	1900
Adjustment:	0.95	0.91	0.91	0.95	0.91	0.85	0.92	0.95	0.85	0.95	0.93	0.93
Lanes:	1.00	2.92	0.08	1.00	3.00	1.00	2.00	2.00	1.00	1.00	1.70	0.30
Final Sat.:	1805	5022	144	1805	5187	1615	3502	3610	1615	1805	2991	536
Capacity Analysis Module:												
Vol/Sat:	0.08	0.26	0.26	0.07	0.41	0.37	0.18	0.04	0.15	0.02	0.09	0.09
Crit Moves:	****				****		****				****	
Green/Cycle:	0.11	0.51	0.51	0.14	0.53	0.53	0.23	0.32	0.32	0.04	0.12	0.12
Volume/Cap:	0.76	0.52	0.52	0.52	0.76	0.70	0.76	0.12	0.48	0.48	0.76	0.76
Delay/Veh:	59.0	16.6	16.6	42.1	19.6	19.9	40.0	24.3	28.3	52.1	50.3	50.3
User DelAdj:	1.00	1.00	1.00	1.00	1.00	1.00	1.00	1.00	1.00	1.00	1.00	1.00
AdjDel/Veh:	59.0	16.6	16.6	42.1	19.6	19.9	40.0	24.3	28.3	52.1	50.3	50.3
LOS by Move:	E	B	B	D	B	B	D	C	C	D	D	D
HCM2kAvgQ:	6	10	10	4	20	15	11	2	6	2	7	7

Note: Queue reported is the number of cars per lane.

City of Murrieta General Plan
Existing General Plan
AM Peak Hour

Level Of Service Computation Report
2000 HCM Operations Method (Future Volume Alternative)

Intersection #18 California Oaks Road & Clinton Keith Road

Cycle (sec): 100 | Critical Vol./Cap.(X): 0.998
Loss Time (sec): 0 (Y+R=4.0 sec) | Average Delay (sec/veh): 32.7
Optimal Cycle: 180 | Level Of Service: C

Street Name:	California Oaks Road						Clinton Keith Road					
Approach:	North Bound			South Bound			East Bound			West Bound		
Movement:	L	T	R	L	T	R	L	T	R	L	T	R
Control:	Protected			Protected			Protected			Protected		
Rights:	Ovl			Include			Include			Include		
Min. Green:	0	0	0	0	0	0	0	0	0	0	0	0
Lanes:	1 0	0 0	2	0 0	0 0	0	0 0	2 1	0	1 0	3 0	0
Volume Module:												
Base Vol:	216	0	542	0	0	0	0	2182	298	706	1680	0
Growth Adj:	1.00	1.00	1.00	1.00	1.00	1.00	1.00	1.00	1.00	1.00	1.00	1.00
Initial Bse:	216	0	542	0	0	0	0	2182	298	706	1680	0
Added Vol:	0	0	0	0	0	0	0	0	0	0	0	0
PasserByVol:	0	0	0	0	0	0	0	0	0	0	0	0
Initial Fut:	216	0	542	0	0	0	0	2182	298	706	1680	0
User Adj:	1.00	1.00	1.00	1.00	1.00	1.00	1.00	1.00	1.00	1.00	1.00	1.00
PHF Adj:	1.00	1.00	1.00	1.00	1.00	1.00	1.00	1.00	1.00	1.00	1.00	1.00
PHF Volume:	216	0	542	0	0	0	0	2182	298	706	1680	0
Reduct Vol:	0	0	0	0	0	0	0	0	0	0	0	0
Reduced Vol:	216	0	542	0	0	0	0	2182	298	706	1680	0
PCE Adj:	1.00	1.00	1.00	1.00	1.00	1.00	1.00	1.00	1.00	1.00	1.00	1.00
MLF Adj:	1.00	1.00	1.00	1.00	1.00	1.00	1.00	1.00	1.00	1.00	1.00	1.00
FinalVolume:	216	0	542	0	0	0	0	2182	298	706	1680	0
Saturation Flow Module:												
Sat/Lane:	1900	1900	1900	1900	1900	1900	1900	1900	1900	1900	1900	1900
Adjustment:	0.95	1.00	0.75	1.00	1.00	1.00	1.00	0.89	0.89	0.95	0.91	1.00
Lanes:	1.00	0.00	2.00	0.00	0.00	0.00	0.00	2.64	0.36	1.00	3.00	0.00
Final Sat.:	1805	0	2842	0	0	0	0	4482	612	1805	5187	0
Capacity Analysis Module:												
Vol/Sat:	0.12	0.00	0.19	0.00	0.00	0.00	0.00	0.49	0.49	0.39	0.32	0.00
Crit Moves:	****							****		****		
Green/Cycle:	0.12	0.00	0.51	0.00	0.00	0.00	0.00	0.49	0.49	0.39	0.88	0.00
Volume/Cap:	1.00	0.00	0.37	0.00	0.00	0.00	0.00	1.00	1.00	1.00	0.37	0.00
Delay/Veh:	104.5	0.0	14.9	0.0	0.0	0.0	0.0	43.0	43.0	63.6	1.1	0.0
User DelAdj:	1.00	1.00	1.00	1.00	1.00	1.00	1.00	1.00	1.00	1.00	1.00	1.00
AdjDel/Veh:	104.5	0.0	14.9	0.0	0.0	0.0	0.0	43.0	43.0	63.6	1.1	0.0
LOS by Move:	F	A	B	A	A	A	A	D	D	E	A	A
HCM2kAvgQ:	11	0	6	0	0	0	0	36	36	29	4	0

Note: Queue reported is the number of cars per lane.

City of Murrieta General Plan
Existing General Plan
AM Peak Hour

Level Of Service Computation Report
2000 HCM Operations Method (Future Volume Alternative)

Intersection #19 I-215 SB Off-Ramp & Clinton Keith Road

Cycle (sec): 100 | Critical Vol./Cap.(X): 0.564
Loss Time (sec): 0 (Y+R=4.0 sec) | Average Delay (sec/veh): 8.2
Optimal Cycle: 52 | Level Of Service: A

Street Name:	I-215 SB Off-Ramp						Clinton Keith Road					
Approach:	North Bound			South Bound			East Bound			West Bound		
Movement:	L	T	R	L	T	R	L	T	R	L	T	R
Control:	Split Phase			Split Phase			Protected			Protected		
Rights:	Include			Include			Include			Ignore		
Min. Green:	0	0	0	0	0	0	0	0	0	0	0	0
Lanes:	0 0	0 0	0	0 1	0 0	2	0 0	3 0	1	0 0	3 0	1
Volume Module:												
Base Vol:	0	0	0	57	0	417	0	2167	509	0	1860	225
Growth Adj:	1.00	1.00	1.00	1.00	1.00	1.00	1.00	1.00	1.00	1.00	1.00	1.00
Initial Bse:	0	0	0	57	0	417	0	2167	509	0	1860	225
Added Vol:	0	0	0	0	0	0	0	0	0	0	0	0
PasserByVol:	0	0	0	0	0	0	0	0	0	0	0	0
Initial Fut:	0	0	0	57	0	417	0	2167	509	0	1860	225
User Adj:	1.00	1.00	1.00	1.00	1.00	1.00	1.00	1.00	1.00	1.00	1.00	0.00
PHF Adj:	1.00	1.00	1.00	1.00	1.00	1.00	1.00	1.00	1.00	1.00	1.00	0.00
PHF Volume:	0	0	0	57	0	417	0	2167	509	0	1860	0
Reduct Vol:	0	0	0	0	0	0	0	0	0	0	0	0
Reduced Vol:	0	0	0	57	0	417	0	2167	509	0	1860	0
PCE Adj:	1.00	1.00	1.00	1.00	1.00	1.00	1.00	1.00	1.00	1.00	1.00	0.00
MLF Adj:	1.00	1.00	1.00	1.00	1.00	1.00	1.00	1.00	1.00	1.00	1.00	0.00
FinalVolume:	0	0	0	57	0	417	0	2167	509	0	1860	0
Saturation Flow Module:												
Sat/Lane:	1900	1900	1900	1900	1900	1900	1900	1900	1900	1900	1900	1900
Adjustment:	1.00	1.00	1.00	0.95	1.00	0.75	1.00	0.91	0.85	1.00	0.91	1.00
Lanes:	0.00	0.00	0.00	1.00	0.00	2.00	0.00	3.00	1.00	0.00	3.00	1.00
Final Sat.:	0	0	0	1809	0	2842	0	5187	1615	0	5187	1900
Capacity Analysis Module:												
Vol/Sat:	0.00	0.00	0.00	0.03	0.00	0.15	0.00	0.42	0.32	0.00	0.36	0.00
Crit Moves:						****		****		****		
Green/Cycle:	0.00	0.00	0.00	0.26	0.00	0.26	0.00	0.74	0.74	0.00	0.74	0.00
Volume/Cap:	0.00	0.00	0.00	0.12	0.00	0.56	0.00	0.56	0.43	0.00	0.48	0.00
Delay/Veh:	0.0	0.0	0.0	28.4	0.0	33.1	0.0	6.0	5.2	0.0	5.4	0.0
User DelAdj:	1.00	1.00	1.00	1.00	1.00	1.00	1.00	1.00	1.00	1.00	1.00	1.00
AdjDel/Veh:	0.0	0.0	0.0	28.4	0.0	33.1	0.0	6.0	5.2	0.0	5.4	0.0
LOS by Move:	A	A	A	C	A	C	A	A	A	A	A	A
HCM2kAvgQ:	0	0	0	1	0	7	0	11	6	0	9	0

Note: Queue reported is the number of cars per lane.

City of Murrieta General Plan
Existing General Plan
AM Peak Hour

Level Of Service Computation Report
2000 HCM Operations Method (Future Volume Alternative)

Intersection #20 I-215 NB Off Ramp & Clinton Keith Road

Cycle (sec): 100 Critical Vol./Cap.(X): 1.175
Loss Time (sec): 0 (Y+R=4.0 sec) Average Delay (sec/veh): 83.2
Optimal Cycle: 180 Level Of Service: F

Street Name:	I-215 NB Off Ramp						Clinton Keith Road					
Approach:	North Bound			South Bound			East Bound			West Bound		
Movement:	L	T	R	L	T	R	L	T	R	L	T	R
Control:	Split Phase			Split Phase			Protected			Protected		
Rights:	Include			Include			Include			Ignore		
Min. Green:	0	0	0	0	0	0	0	0	0	0	0	0
Lanes:	1	0 0	0 1	0	0 0	0 0	0	0 3	0 1	0	0 3	0 1
Volume Module:												
Base Vol:	122	0	1233	0	0	0	0	1555	302	0	2136	265
Growth Adj:	1.00	1.00	1.00	1.00	1.00	1.00	1.00	1.00	1.00	1.00	1.00	1.00
Initial Bse:	122	0	1233	0	0	0	0	1555	302	0	2136	265
Added Vol:	0	0	0	0	0	0	0	0	0	0	0	0
PasserByVol:	0	0	0	0	0	0	0	0	0	0	0	0
Initial Fut:	122	0	1233	0	0	0	0	1555	302	0	2136	265
User Adj:	1.00	1.00	1.00	1.00	1.00	1.00	1.00	1.00	1.00	1.00	1.00	0.00
PHF Adj:	1.00	1.00	1.00	1.00	1.00	1.00	1.00	1.00	1.00	1.00	1.00	0.00
PHF Volume:	122	0	1233	0	0	0	0	1555	302	0	2136	0
Reduct Vol:	0	0	0	0	0	0	0	0	0	0	0	0
Reduced Vol:	122	0	1233	0	0	0	0	1555	302	0	2136	0
PCE Adj:	1.00	1.00	1.00	1.00	1.00	1.00	1.00	1.00	1.00	1.00	1.00	0.00
MLF Adj:	1.00	1.00	1.00	1.00	1.00	1.00	1.00	1.00	1.00	1.00	1.00	0.00
FinalVolume:	122	0	1233	0	0	0	0	1555	302	0	2136	0
Saturation Flow Module:												
Sat/Lane:	1900	1900	1900	1900	1900	1900	1900	1900	1900	1900	1900	1900
Adjustment:	0.95	1.00	0.85	1.00	1.00	1.00	1.00	0.91	0.85	1.00	0.91	1.00
Lanes:	1.00	0.00	1.00	0.00	0.00	0.00	0.00	3.00	1.00	0.00	3.00	1.00
Final Sat.:	1805	0	1615	0	0	0	0	5187	1615	0	5187	1900
Capacity Analysis Module:												
Vol/Sat:	0.07	0.00	0.76	0.00	0.00	0.00	0.00	0.30	0.19	0.00	0.41	0.00
Crit Moves:			****				****				****	
Green/Cycle:	0.65	0.00	0.65	0.00	0.00	0.00	0.00	0.35	0.35	0.00	0.35	0.00
Volume/Cap:	0.10	0.00	1.18	0.00	0.00	0.00	0.00	0.86	0.53	0.00	1.18	0.00
Delay/Veh:	6.6	0.0	106.6	0.0	0.0	0.0	0.0	34.4	26.9	0.0	118	0.0
User DelAdj:	1.00	1.00	1.00	1.00	1.00	1.00	1.00	1.00	1.00	1.00	1.00	1.00
AdjDel/Veh:	6.6	0.0	106.6	0.0	0.0	0.0	0.0	34.4	26.9	0.0	118	0.0
LOS by Move:	A	A	F	A	A	A	A	C	C	A	F	A
HCM2kAvgQ:	1	0	63	0	0	0	0	19	8	0	41	0

Note: Queue reported is the number of cars per lane.

City of Murrieta General Plan
Existing General Plan
AM Peak Hour

Level Of Service Computation Report
2000 HCM Operations Method (Future Volume Alternative)

Intersection #21 Antelope Road & Clinton Keith Road

Cycle (sec): 100 Critical Vol./Cap.(X): 0.385
Loss Time (sec): 0 (Y+R=4.0 sec) Average Delay (sec/veh): 4.3
Optimal Cycle: 37 Level Of Service: A

Street Name:	Antelope Road						Clinton Keith Road					
Approach:	North Bound			South Bound			East Bound			West Bound		
Movement:	L	T	R	L	T	R	L	T	R	L	T	R
Control:	Protected			Protected			Protected			Protected		
Rights:	Include			Ignore			Include			Include		
Min. Green:	0	0	0	0	0	0	0	0	0	0	0	0
Lanes:	0 0	0 0	0	2 0	0 0	2	2 0	3 0	0	0 0	2 1	0
Volume Module:												
Base Vol:	0	0	0	26	0	514	253	1768	0	0	1308	238
Growth Adj:	1.00	1.00	1.00	1.00	1.00	1.00	1.00	1.00	1.00	1.00	1.00	1.00
Initial Bse:	0	0	0	26	0	514	253	1768	0	0	1308	238
Added Vol:	0	0	0	0	0	0	0	0	0	0	0	0
PasserByVol:	0	0	0	0	0	0	0	0	0	0	0	0
Initial Fut:	0	0	0	26	0	514	253	1768	0	0	1308	238
User Adj:	1.00	1.00	1.00	1.00	1.00	0.00	1.00	1.00	1.00	1.00	1.00	1.00
PHF Adj:	1.00	1.00	1.00	1.00	1.00	0.00	1.00	1.00	1.00	1.00	1.00	1.00
PHF Volume:	0	0	0	26	0	0	253	1768	0	0	1308	238
Reduct Vol:	0	0	0	0	0	0	0	0	0	0	0	0
Reduced Vol:	0	0	0	26	0	0	253	1768	0	0	1308	238
PCE Adj:	1.00	1.00	1.00	1.00	1.00	0.00	1.00	1.00	1.00	1.00	1.00	1.00
MLF Adj:	1.00	1.00	1.00	1.00	1.00	0.00	1.00	1.00	1.00	1.00	1.00	1.00
FinalVolume:	0	0	0	26	0	0	253	1768	0	0	1308	238
Saturation Flow Module:												
Sat/Lane:	1900	1900	1900	1900	1900	1900	1900	1900	1900	1900	1900	1900
Adjustment:	1.00	1.00	1.00	0.92	1.00	0.88	0.92	0.91	1.00	1.00	0.89	0.89
Lanes:	0.00	0.00	0.00	2.00	0.00	2.00	2.00	3.00	0.00	0.00	2.54	0.46
Final Sat.:	0	0	0	3502	0	3344	3502	5187	0	0	4288	780
Capacity Analysis Module:												
Vol/Sat:	0.00	0.00	0.00	0.01	0.00	0.00	0.07	0.34	0.00	0.00	0.31	0.31
Crit Moves:				****			****				****	
Green/Cycle:	0.00	0.00	0.00	0.02	0.00	0.00	0.19	0.98	0.00	0.00	0.79	0.79
Volume/Cap:	0.00	0.00	0.00	0.38	0.00	0.00	0.38	0.35	0.00	0.00	0.38	0.38
Delay/Veh:	0.0	0.0	0.0	52.1	0.0	0.0	35.9	0.1	0.0	0.0	3.1	3.1
User DelAdj:	1.00	1.00	1.00	1.00	1.00	1.00	1.00	1.00	1.00	1.00	1.00	1.00
AdjDel/Veh:	0.0	0.0	0.0	52.1	0.0	0.0	35.9	0.1	0.0	0.0	3.1	3.1
LOS by Move:	A	A	A	D	A	A	D	A	A	A	A	A
HCM2kAvgQ:	0	0	0	1	0	0	4	1	0	0	5	5

Note: Queue reported is the number of cars per lane.

City of Murrieta General Plan
Existing General Plan
AM Peak Hour

Level Of Service Computation Report
2000 HCM Operations Method (Future Volume Alternative)

Intersection #23 Liberty Road & Clinton Keith Road

Cycle (sec): 100 Critical Vol./Cap.(X): 0.486
Loss Time (sec): 0 (Y+R=4.0 sec) Average Delay (sec/veh): 2.5
Optimal Cycle: 44 Level Of Service: A

Street Name:	Liberty Road						Clinton Keith Road					
Approach:	North Bound			South Bound			East Bound			West Bound		
Movement:	L - T - R			L - T - R			L - T - R			L - T - R		
Control:	Protected			Protected			Protected			Protected		
Rights:	Include			Include			Include			Include		
Min. Green:	0	0	0	0	0	0	0	0	0	0	0	0
Lanes:	2 0	0	0 1	0 0	0	0 0	0 0	2	1 0	1 0	3	0 0
Volume Module:												
Base Vol:	14	0	72	0	0	0	0	1998	169	34	1999	0
Growth Adj:	1.00	1.00	1.00	1.00	1.00	1.00	1.00	1.00	1.00	1.00	1.00	1.00
Initial Bse:	14	0	72	0	0	0	0	1998	169	34	1999	0
Added Vol:	0	0	0	0	0	0	0	0	0	0	0	0
PasserByVol:	0	0	0	0	0	0	0	0	0	0	0	0
Initial Fut:	14	0	72	0	0	0	0	1998	169	34	1999	0
User Adj:	1.00	1.00	1.00	1.00	1.00	1.00	1.00	1.00	1.00	1.00	1.00	1.00
PHF Adj:	1.00	1.00	1.00	1.00	1.00	1.00	1.00	1.00	1.00	1.00	1.00	1.00
PHF Volume:	14	0	72	0	0	0	0	1998	169	34	1999	0
Reduct Vol:	0	0	0	0	0	0	0	0	0	0	0	0
Reduced Vol:	14	0	72	0	0	0	0	1998	169	34	1999	0
PCE Adj:	1.00	1.00	1.00	1.00	1.00	1.00	1.00	1.00	1.00	1.00	1.00	1.00
MLF Adj:	1.00	1.00	1.00	1.00	1.00	1.00	1.00	1.00	1.00	1.00	1.00	1.00
FinalVolume:	14	0	72	0	0	0	0	1998	169	34	1999	0
Saturation Flow Module:												
Sat/Lane:	1900	1900	1900	1900	1900	1900	1900	1900	1900	1900	1900	1900
Adjustment:	0.92	1.00	0.85	1.00	1.00	1.00	1.00	0.90	0.90	0.95	0.91	1.00
Lanes:	2.00	0.00	1.00	0.00	0.00	0.00	0.00	2.77	0.23	1.00	3.00	0.00
Final Sat.:	3502	0	1615	0	0	0	0	4725	400	1805	5187	0
Capacity Analysis Module:												
Vol/Sat:	0.00	0.00	0.04	0.00	0.00	0.00	0.00	0.42	0.42	0.02	0.39	0.00
Crit Moves:			****					****		****		
Green/Cycle:	0.09	0.00	0.09	0.00	0.00	0.00	0.00	0.87	0.87	0.04	0.91	0.00
Volume/Cap:	0.04	0.00	0.49	0.00	0.00	0.00	0.00	0.49	0.49	0.49	0.42	0.00
Delay/Veh:	41.5	0.0	45.7	0.0	0.0	0.0	0.0	1.6	1.6	52.3	0.7	0.0
User DelAdj:	1.00	1.00	1.00	1.00	1.00	1.00	1.00	1.00	1.00	1.00	1.00	1.00
AdjDel/Veh:	41.5	0.0	45.7	0.0	0.0	0.0	0.0	1.6	1.6	52.3	0.7	0.0
LOS by Move:	D	A	D	A	A	A	A	A	A	D	A	A
HCM2kAvgQ:	0	0	3	0	0	0	0	6	6	2	4	0

Note: Queue reported is the number of cars per lane.

City of Murrieta General Plan
Existing General Plan
AM Peak Hour

Level Of Service Computation Report
2000 HCM Operations Method (Future Volume Alternative)

Intersection #24 Leon Road & Clinton Keith Road

Cycle (sec): 100 Critical Vol./Cap.(X): 0.736
Loss Time (sec): 0 (Y+R=4.0 sec) Average Delay (sec/veh): 19.3
Optimal Cycle: 86 Level Of Service: B

Street Name:	Leon Road						Clinton Keith Road					
Approach:	North Bound			South Bound			East Bound			West Bound		
Movement:	L - T - R			L - T - R			L - T - R			L - T - R		
Control:	Protected			Protected			Protected			Protected		
Rights:	Include			Ovl			Include			Include		
Min. Green:	0	0	0	0	0	0	0	0	0	0	0	0
Lanes:	0 0	0	0 0	1 0	0	0 2	2 0	3	0 0	0 0	3	0 1
Volume Module:												
Base Vol:	0	0	0	127	0	1180	461	1597	0	0	669	518
Growth Adj:	1.00	1.00	1.00	1.00	1.00	1.00	1.00	1.00	1.00	1.00	1.00	1.00
Initial Bse:	0	0	0	127	0	1180	461	1597	0	0	669	518
Added Vol:	0	0	0	0	0	0	0	0	0	0	0	0
PasserByVol:	0	0	0	0	0	0	0	0	0	0	0	0
Initial Fut:	0	0	0	127	0	1180	461	1597	0	0	669	518
User Adj:	1.00	1.00	1.00	1.00	1.00	1.00	1.00	1.00	1.00	1.00	1.00	1.00
PHF Adj:	1.00	1.00	1.00	1.00	1.00	1.00	1.00	1.00	1.00	1.00	1.00	1.00
PHF Volume:	0	0	0	127	0	1180	461	1597	0	0	669	518
Reduct Vol:	0	0	0	0	0	0	0	0	0	0	0	0
Reduced Vol:	0	0	0	127	0	1180	461	1597	0	0	669	518
PCE Adj:	1.00	1.00	1.00	1.00	1.00	1.00	1.00	1.00	1.00	1.00	1.00	1.00
MLF Adj:	1.00	1.00	1.00	1.00	1.00	1.00	1.00	1.00	1.00	1.00	1.00	1.00
FinalVolume:	0	0	0	127	0	1180	461	1597	0	0	669	518
Saturation Flow Module:												
Sat/Lane:	1900	1900	1900	1900	1900	1900	1900	1900	1900	1900	1900	1900
Adjustment:	1.00	1.00	1.00	0.95	1.00	0.75	0.92	0.91	1.00	1.00	0.91	0.85
Lanes:	0.00	0.00	0.00	1.00	0.00	2.00	2.00	3.00	0.00	0.00	3.00	1.00
Final Sat.:	0	0	0	1805	0	2842	3502	5187	0	0	5187	1615
Capacity Analysis Module:												
Vol/Sat:	0.00	0.00	0.00	0.07	0.00	0.42	0.13	0.31	0.00	0.00	0.13	0.32
Crit Moves:						****	****					****
Green/Cycle:	0.00	0.00	0.00	0.39	0.00	0.56	0.18	0.61	0.00	0.00	0.44	0.44
Volume/Cap:	0.00	0.00	0.00	0.18	0.00	0.74	0.74	0.50	0.00	0.00	0.30	0.74
Delay/Veh:	0.0	0.0	0.0	20.5	0.0	18.1	43.4	10.8	0.0	0.0	18.3	27.5
User DelAdj:	1.00	1.00	1.00	1.00	1.00	1.00	1.00	1.00	1.00	1.00	1.00	1.00
AdjDel/Veh:	0.0	0.0	0.0	20.5	0.0	18.1	43.4	10.8	0.0	0.0	18.3	27.5
LOS by Move:	A	A	A	C	A	B	D	B	A	A	B	C
HCM2kAvgQ:	0	0	0	3	0	16	9	10	0	0	5	14

Note: Queue reported is the number of cars per lane.

City of Murrieta General Plan
Existing General Plan
AM Peak Hour

Level Of Service Computation Report
2000 HCM Operations Method (Future Volume Alternative)

Intersection #25 Winchester Road - SR-79 & Benton Road

Cycle (sec): 100 Critical Vol./Cap.(X): 0.989
Loss Time (sec): 0 (Y+R=4.0 sec) Average Delay (sec/veh): 41.0
Optimal Cycle: 180 Level Of Service: D

Street Name:	Winchester Road - SR-79						Benton Road					
Approach:	North Bound			South Bound			East Bound			West Bound		
Movement:	L -	T -	R	L -	T -	R	L -	T -	R	L -	T -	R
Control:	Protected			Protected			Protected			Protected		
Rights:	Include			Include			Include			Include		
Min. Green:	0	0	0	0	0	0	0	0	0	0	0	0
Lanes:	2 0	3 0	1	2 0	3 0	1	2 0	2 0	2	2 0	2 0	1
Volume Module:												
Base Vol:	431	1337	332	86	1977	353	45	502	1122	316	514	30
Growth Adj:	1.00	1.00	1.00	1.00	1.00	1.00	1.00	1.00	1.00	1.00	1.00	1.00
Initial Bse:	431	1337	332	86	1977	353	45	502	1122	316	514	30
Added Vol:	0	0	0	0	0	0	0	0	0	0	0	0
PasserByVol:	0	0	0	0	0	0	0	0	0	0	0	0
Initial Fut:	431	1337	332	86	1977	353	45	502	1122	316	514	30
User Adj:	1.00	1.00	1.00	1.00	1.00	1.00	1.00	1.00	1.00	1.00	1.00	1.00
PHF Adj:	1.00	1.00	1.00	1.00	1.00	1.00	1.00	1.00	1.00	1.00	1.00	1.00
PHF Volume:	431	1337	332	86	1977	353	45	502	1122	316	514	30
Reduct Vol:	0	0	0	0	0	0	0	0	0	0	0	0
Reduced Vol:	431	1337	332	86	1977	353	45	502	1122	316	514	30
PCE Adj:	1.00	1.00	1.00	1.00	1.00	1.00	1.00	1.00	1.00	1.00	1.00	1.00
MLF Adj:	1.00	1.00	1.00	1.00	1.00	1.00	1.00	1.00	1.00	1.00	1.00	1.00
FinalVolume:	431	1337	332	86	1977	353	45	502	1122	316	514	30
Saturation Flow Module:												
Sat/Lane:	1900	1900	1900	1900	1900	1900	1900	1900	1900	1900	1900	1900
Adjustment:	0.92	0.91	0.85	0.92	0.91	0.85	0.92	0.95	0.75	0.92	0.95	0.85
Lanes:	2.00	3.00	1.00	2.00	3.00	1.00	2.00	2.00	2.00	2.00	2.00	1.00
Final Sat.:	3502	5187	1615	3502	5187	1615	3502	3610	2842	3502	3610	1615
Capacity Analysis Module:												
Vol/Sat:	0.12	0.26	0.21	0.02	0.38	0.22	0.01	0.14	0.39	0.09	0.14	0.02
Crit Moves:	****				****				****	****		
Green/Cycle:	0.12	0.47	0.47	0.04	0.39	0.39	0.04	0.40	0.40	0.09	0.45	0.45
Volume/Cap:	0.99	0.55	0.44	0.55	0.99	0.57	0.32	0.35	0.99	0.99	0.32	0.04
Delay/Veh:	83.9	19.5	18.4	51.1	48.1	25.4	47.9	21.1	53.9	92.7	17.8	15.5
User DelAdj:	1.00	1.00	1.00	1.00	1.00	1.00	1.00	1.00	1.00	1.00	1.00	1.00
AdjDel/Veh:	83.9	19.5	18.4	51.1	48.1	25.4	47.9	21.1	53.9	92.7	17.8	15.5
LOS by Move:	F	B	B	D	D	C	D	C	D	F	B	B
HCM2kAvgQ:	11	11	7	2	29	9	1	6	26	9	5	1

Note: Queue reported is the number of cars per lane.

City of Murrieta General Plan
Existing General Plan
AM Peak Hour

Level Of Service Computation Report
2000 HCM Operations Method (Future Volume Alternative)

Intersection #26 Winchester Road - SR-79 & Via Mira Mosa

Cycle (sec): 100 Critical Vol./Cap.(X): 0.918
Loss Time (sec): 0 (Y+R=4.0 sec) Average Delay (sec/veh): 24.1
Optimal Cycle: 180 Level Of Service: C

Street Name:	Winchester Road - SR-79						Via Mira Mosa					
Approach:	North Bound			South Bound			East Bound			West Bound		
Movement:	L -	T -	R	L -	T -	R	L -	T -	R	L -	T -	R
Control:	Protected			Protected			Protected			Protected		
Rights:	Include			Include			Include			Include		
Min. Green:	0	0	0	0	0	0	0	0	0	0	0	0
Lanes:	1 0	2 1	0	1 0	2 1	0	1 0	0 1	0	1 0	0 1	0
Volume Module:												
Base Vol:	27	1572	841	331	2662	228	349	51	91	176	19	30
Growth Adj:	1.00	1.00	1.00	1.00	1.00	1.00	1.00	1.00	1.00	1.00	1.00	1.00
Initial Bse:	27	1572	841	331	2662	228	349	51	91	176	19	30
Added Vol:	0	0	0	0	0	0	0	0	0	0	0	0
PasserByVol:	0	0	0	0	0	0	0	0	0	0	0	0
Initial Fut:	27	1572	841	331	2662	228	349	51	91	176	19	30
User Adj:	1.00	1.00	1.00	1.00	1.00	1.00	1.00	1.00	1.00	1.00	1.00	1.00
PHF Adj:	1.00	1.00	1.00	1.00	1.00	1.00	1.00	1.00	1.00	1.00	1.00	1.00
PHF Volume:	27	1572	841	331	2662	228	349	51	91	176	19	30
Reduct Vol:	0	0	0	0	0	0	0	0	0	0	0	0
Reduced Vol:	27	1572	841	331	2662	228	349	51	91	176	19	30
PCE Adj:	1.00	1.00	1.00	1.00	1.00	1.00	1.00	1.00	1.00	1.00	1.00	1.00
MLF Adj:	1.00	1.00	1.00	1.00	1.00	1.00	1.00	1.00	1.00	1.00	1.00	1.00
FinalVolume:	27	1572	841	331	2662	228	349	51	91	176	19	30
Saturation Flow Module:												
Sat/Lane:	1900	1900	1900	1900	1900	1900	1900	1900	1900	1900	1900	1900
Adjustment:	0.95	0.86	0.86	0.95	0.90	0.90	0.95	0.90	0.90	0.95	0.91	0.91
Lanes:	1.00	2.00	1.00	1.00	2.76	0.24	1.00	0.36	0.64	1.00	0.39	0.61
Final Sat.:	1805	3278	1639	1805	4720	404	1805	617	1101	1805	669	1056
Capacity Analysis Module:												
Vol/Sat:	0.01	0.48	0.51	0.18	0.56	0.56	0.19	0.08	0.08	0.10	0.03	0.03
Crit Moves:			****	****			****				****	
Green/Cycle:	0.02	0.56	0.56	0.20	0.74	0.74	0.21	0.11	0.11	0.13	0.03	0.03
Volume/Cap:	0.76	0.86	0.92	0.92	0.76	0.76	0.92	0.75	0.75	0.75	0.92	0.92
Delay/Veh:	113.1	21.6	25.8	67.0	8.8	8.8	65.4	58.0	58.0	54.1	142	141.5
User DelAdj:	1.00	1.00	1.00	1.00	1.00	1.00	1.00	1.00	1.00	1.00	1.00	1.00
AdjDel/Veh:	113.1	21.6	25.8	67.0	8.8	8.8	65.4	58.0	58.0	54.1	142	141.5
LOS by Move:	F	C	C	E	A	A	E	E	E	D	F	F
HCM2kAvgQ:	2	25	30	14	21	21	14	6	6	7	4	4

Note: Queue reported is the number of cars per lane.

City of Murrieta General Plan
Existing General Plan
AM Peak Hour

Level Of Service Computation Report
2000 HCM Operations Method (Future Volume Alternative)

Intersection #27 Monroe Ave & Los Alamos

Cycle (sec): 100 | Critical Vol./Cap.(X): 0.550
Loss Time (sec): 0 (Y+R=4.0 sec) | Average Delay (sec/veh): 23.9
Optimal Cycle: 51 | Level Of Service: C

Street Name:	Monroe Ave						Los Alamos					
Approach:	North Bound			South Bound			East Bound			West Bound		
Movement:	L - T - R			L - T - R			L - T - R			L - T - R		
Control:	Protected			Protected			Protected			Protected		
Rights:	Include			Include			Include			Include		
Min. Green:	0	0	0	0	0	0	0	0	0	0	0	0
Lanes:	1 0	1 1	0	2 0	2 0	1	1 0	1 1	0	1 0	2 0	1
Volume Module:												
Base Vol:	27	206	176	515	446	194	42	321	127	62	959	438
Growth Adj:	1.00	1.00	1.00	1.00	1.00	1.00	1.00	1.00	1.00	1.00	1.00	1.00
Initial Bse:	27	206	176	515	446	194	42	321	127	62	959	438
Added Vol:	0	0	0	0	0	0	0	0	0	0	0	0
PasserByVol:	0	0	0	0	0	0	0	0	0	0	0	0
Initial Fut:	27	206	176	515	446	194	42	321	127	62	959	438
User Adj:	1.00	1.00	1.00	1.00	1.00	1.00	1.00	1.00	1.00	1.00	1.00	1.00
PHF Adj:	1.00	1.00	1.00	1.00	1.00	1.00	1.00	1.00	1.00	1.00	1.00	1.00
PHF Volume:	27	206	176	515	446	194	42	321	127	62	959	438
Reduct Vol:	0	0	0	0	0	0	0	0	0	0	0	0
Reduced Vol:	27	206	176	515	446	194	42	321	127	62	959	438
PCE Adj:	1.00	1.00	1.00	1.00	1.00	1.00	1.00	1.00	1.00	1.00	1.00	1.00
MLF Adj:	1.00	1.00	1.00	1.00	1.00	1.00	1.00	1.00	1.00	1.00	1.00	1.00
FinalVolume:	27	206	176	515	446	194	42	321	127	62	959	438
Saturation Flow Module:												
Sat/Lane:	1900	1900	1900	1900	1900	1900	1900	1900	1900	1900	1900	1900
Adjustment:	0.95	0.88	0.88	0.92	0.95	0.85	0.95	0.91	0.91	0.95	0.95	0.85
Lanes:	1.00	1.08	0.92	2.00	2.00	1.00	1.00	1.43	0.57	1.00	2.00	1.00
Final Sat.:	1805	1812	1548	3502	3610	1615	1805	2478	980	1805	3610	1615
Capacity Analysis Module:												
Vol/Sat:	0.01	0.11	0.11	0.15	0.12	0.12	0.02	0.13	0.13	0.03	0.27	0.27
Crit Moves:		****		****			****				****	
Green/Cycle:	0.05	0.21	0.21	0.27	0.42	0.42	0.04	0.42	0.42	0.11	0.48	0.48
Volume/Cap:	0.29	0.55	0.55	0.55	0.29	0.28	0.55	0.31	0.31	0.31	0.55	0.56
Delay/Veh:	47.4	36.4	36.4	32.1	19.1	19.1	55.2	19.8	19.8	41.9	18.6	19.2
User DelAdj:	1.00	1.00	1.00	1.00	1.00	1.00	1.00	1.00	1.00	1.00	1.00	1.00
AdjDel/Veh:	47.4	36.4	36.4	32.1	19.1	19.1	55.2	19.8	19.8	41.9	18.6	19.2
LOS by Move:	D	D	D	C	B	B	E	B	B	D	B	B
HCM2kAvgQ:	1	6	6	8	5	4	2	5	5	2	11	10

Note: Queue reported is the number of cars per lane.

City of Murrieta General Plan
Existing General Plan
AM Peak Hour

Level Of Service Computation Report
2000 HCM Operations Method (Future Volume Alternative)

Intersection #28 Jefferson Avenue & Murrieta Hot Springs Road

Cycle (sec): 100 | Critical Vol./Cap.(X): 1.347
Loss Time (sec): 0 (Y+R=4.0 sec) | Average Delay (sec/veh): 116.4
Optimal Cycle: 180 | Level Of Service: F

Street Name:	Jefferson Avenue						Murrieta Hot Springs Road					
Approach:	North Bound			South Bound			East Bound			West Bound		
Movement:	L - T - R			L - T - R			L - T - R			L - T - R		
Control:	Protected			Protected			Protected			Protected		
Rights:	Include			Include			Include			Include		
Min. Green:	0	0	0	0	0	0	0	0	0	0	0	0
Lanes:	1 0	3 0	1	1 0	2 1	0	1 0	2 1	0	1 0	2 1	0
Volume Module:												
Base Vol:	13	981	579	815	1199	75	13	82	24	931	99	699
Growth Adj:	1.00	1.00	1.00	1.00	1.00	1.00	1.00	1.00	1.00	1.00	1.00	1.00
Initial Bse:	13	981	579	815	1199	75	13	82	24	931	99	699
Added Vol:	0	0	0	0	0	0	0	0	0	0	0	0
PasserByVol:	0	0	0	0	0	0	0	0	0	0	0	0
Initial Fut:	13	981	579	815	1199	75	13	82	24	931	99	699
User Adj:	1.00	1.00	1.00	1.00	1.00	1.00	1.00	1.00	1.00	1.00	1.00	1.00
PHF Adj:	1.00	1.00	1.00	1.00	1.00	1.00	1.00	1.00	1.00	1.00	1.00	1.00
PHF Volume:	13	981	579	815	1199	75	13	82	24	931	99	699
Reduct Vol:	0	0	0	0	0	0	0	0	0	0	0	0
Reduced Vol:	13	981	579	815	1199	75	13	82	24	931	99	699
PCE Adj:	1.00	1.00	1.00	1.00	1.00	1.00	1.00	1.00	1.00	1.00	1.00	1.00
MLF Adj:	1.00	1.00	1.00	1.00	1.00	1.00	1.00	1.00	1.00	1.00	1.00	1.00
FinalVolume:	13	981	579	815	1199	75	13	82	24	931	99	699
Saturation Flow Module:												
Sat/Lane:	1900	1900	1900	1900	1900	1900	1900	1900	1900	1900	1900	1900
Adjustment:	0.95	0.91	0.85	0.95	0.90	0.90	0.95	0.88	0.88	0.95	0.79	0.79
Lanes:	1.00	3.00	1.00	1.00	2.82	0.18	1.00	2.32	0.68	1.00	2.00	1.00
Final Sat.:	1805	5187	1615	1805	4838	303	1805	3876	1134	1805	3005	1503
Capacity Analysis Module:												
Vol/Sat:	0.01	0.19	0.36	0.45	0.25	0.25	0.01	0.02	0.02	0.52	0.03	0.47
Crit Moves:			****	****				****		****		
Green/Cycle:	0.02	0.27	0.27	0.34	0.58	0.58	0.01	0.02	0.02	0.38	0.39	0.39
Volume/Cap:	0.42	0.71	1.35	1.35	0.42	0.42	1.19	1.35	1.35	1.35	0.08	1.19
Delay/Veh:	57.9	35.0	207.7	200.2	11.6	11.6	390.1	269	268.6	196.5	19.1	128.2
User DelAdj:	1.00	1.00	1.00	1.00	1.00	1.00	1.00	1.00	1.00	1.00	1.00	1.00
AdjDel/Veh:	57.9	35.0	207.7	200.2	11.6	11.6	390.1	269	268.6	196.5	19.1	128.2
LOS by Move:	E	C	F	F	B	B	F	F	F	F	B	F
HCM2kAvgQ:	1	11	38	52	8	8	2	4	4	59	1	41

Note: Queue reported is the number of cars per lane.

City of Murrieta General Plan
Existing General Plan
AM Peak Hour

Level Of Service Computation Report
2000 HCM Operations Method (Future Volume Alternative)

Intersection #29 Madison Avenue & Murrieta Hot Springs Road

Cycle (sec): 100 Critical Vol./Cap.(X): 0.635
Loss Time (sec): 0 (Y+R=4.0 sec) Average Delay (sec/veh): 26.2
Optimal Cycle: 63 Level Of Service: C

Street Name:	Madison Avenue						Murrieta Hot Springs Road					
Approach:	North Bound			South Bound			East Bound			West Bound		
Movement:	L -	T -	R	L -	T -	R	L -	T -	R	L -	T -	R
Control:	Protected			Protected			Protected			Protected		
Rights:	Include			Include			Include			Include		
Min. Green:	0	0	0	0	0	0	0	0	0	0	0	0
Lanes:	2 0	2 0	1	2 0	1 1	0	2 0	3 1	0	2 0	3 0	1
Volume Module:												
Base Vol:	140	79	322	150	144	141	140	1141	260	647	1759	79
Growth Adj:	1.00	1.00	1.00	1.00	1.00	1.00	1.00	1.00	1.00	1.00	1.00	1.00
Initial Bse:	140	79	322	150	144	141	140	1141	260	647	1759	79
Added Vol:	0	0	0	0	0	0	0	0	0	0	0	0
PasserByVol:	0	0	0	0	0	0	0	0	0	0	0	0
Initial Fut:	140	79	322	150	144	141	140	1141	260	647	1759	79
User Adj:	1.00	1.00	1.00	1.00	1.00	1.00	1.00	1.00	1.00	1.00	1.00	1.00
PHF Adj:	1.00	1.00	1.00	1.00	1.00	1.00	1.00	1.00	1.00	1.00	1.00	1.00
PHF Volume:	140	79	322	150	144	141	140	1141	260	647	1759	79
Reduct Vol:	0	0	0	0	0	0	0	0	0	0	0	0
Reduced Vol:	140	79	322	150	144	141	140	1141	260	647	1759	79
PCE Adj:	1.00	1.00	1.00	1.00	1.00	1.00	1.00	1.00	1.00	1.00	1.00	1.00
MLF Adj:	1.00	1.00	1.00	1.00	1.00	1.00	1.00	1.00	1.00	1.00	1.00	1.00
FinalVolume:	140	79	322	150	144	141	140	1141	260	647	1759	79
Saturation Flow Module:												
Sat/Lane:	1900	1900	1900	1900	1900	1900	1900	1900	1900	1900	1900	1900
Adjustment:	0.92	0.95	0.85	0.92	0.88	0.88	0.92	0.88	0.88	0.92	0.91	0.85
Lanes:	2.00	2.00	1.00	2.00	1.01	0.99	2.00	3.26	0.74	2.00	3.00	1.00
Final Sat.:	3502	3610	1615	3502	1689	1654	3502	5475	1248	3502	5187	1615
Capacity Analysis Module:												
Vol/Sat:	0.04	0.02	0.20	0.04	0.09	0.09	0.04	0.21	0.21	0.18	0.34	0.05
Crit Moves:			****	****				****		****		
Green/Cycle:	0.12	0.31	0.31	0.07	0.26	0.26	0.07	0.33	0.33	0.29	0.55	0.55
Volume/Cap:	0.33	0.07	0.64	0.64	0.33	0.33	0.61	0.64	0.64	0.64	0.61	0.09
Delay/Veh:	40.6	24.1	32.1	51.0	30.2	30.2	50.4	29.1	29.1	32.2	15.5	10.5
User DelAdj:	1.00	1.00	1.00	1.00	1.00	1.00	1.00	1.00	1.00	1.00	1.00	1.00
AdjDel/Veh:	40.6	24.1	32.1	51.0	30.2	30.2	50.4	29.1	29.1	32.2	15.5	10.5
LOS by Move:	D	C	C	D	C	C	D	C	C	C	B	B
HCM2kAvgQ:	2	1	9	3	4	4	3	11	11	10	14	1

Note: Queue reported is the number of cars per lane.

City of Murrieta General Plan
Existing General Plan
AM Peak Hour

Level Of Service Computation Report
2000 HCM Operations Method (Future Volume Alternative)

Intersection #30 I-15 SB Off-Ramp & Murrieta Hot Springs Road

Cycle (sec): 100 Critical Vol./Cap.(X): 0.709
Loss Time (sec): 0 (Y+R=4.0 sec) Average Delay (sec/veh): 16.0
Optimal Cycle: 78 Level Of Service: B

Street Name:	I-15 SB Off-Ramp						Murrieta Hot Springs Road					
Approach:	North Bound			South Bound			East Bound			West Bound		
Movement:	L -	T -	R	L -	T -	R	L -	T -	R	L -	T -	R
Control:	Protected			Protected			Protected			Protected		
Rights:	Include			Include			Ignore			Ignore		
Min. Green:	0	0	0	0	0	0	0	0	0	0	0	0
Lanes:	0 0	0 0	0	1 0	1! 0	1	0 0	3 0	1	0 0	3 0	1
Volume Module:												
Base Vol:	0	0	0	813	0	394	0	1348	225	0	2235	47
Growth Adj:	1.00	1.00	1.00	1.00	1.00	1.00	1.00	1.00	1.00	1.00	1.00	1.00
Initial Bse:	0	0	0	813	0	394	0	1348	225	0	2235	47
Added Vol:	0	0	0	0	0	0	0	0	0	0	0	0
PasserByVol:	0	0	0	0	0	0	0	0	0	0	0	0
Initial Fut:	0	0	0	813	0	394	0	1348	225	0	2235	47
User Adj:	1.00	1.00	1.00	1.00	1.00	1.00	1.00	1.00	0.00	1.00	1.00	0.00
PHF Adj:	1.00	1.00	1.00	1.00	1.00	1.00	1.00	1.00	0.00	1.00	1.00	0.00
PHF Volume:	0	0	0	813	0	394	0	1348	0	0	2235	0
Reduct Vol:	0	0	0	0	0	0	0	0	0	0	0	0
Reduced Vol:	0	0	0	813	0	394	0	1348	0	0	2235	0
PCE Adj:	1.00	1.00	1.00	1.00	1.00	1.00	1.00	1.00	0.00	1.00	1.00	0.00
MLF Adj:	1.00	1.00	1.00	1.00	1.00	1.00	1.00	1.00	0.00	1.00	1.00	0.00
FinalVolume:	0	0	0	813	0	394	0	1348	0	0	2235	0
Saturation Flow Module:												
Sat/Lane:	1900	1900	1900	1900	1900	1900	1900	1900	1900	1900	1900	1900
Adjustment:	1.00	1.00	1.00	0.92	1.00	0.92	1.00	0.91	1.00	1.00	0.91	1.00
Lanes:	0.00	0.00	0.00	1.67	0.00	1.33	0.00	3.00	1.00	0.00	3.00	1.00
Final Sat.:	0	0	0	2924	0	2318	0	5187	1900	0	5187	1900
Capacity Analysis Module:												
Vol/Sat:	0.00	0.00	0.00	0.28	0.00	0.17	0.00	0.26	0.00	0.00	0.43	0.00
Crit Moves:				****			****				****	
Green/Cycle:	0.00	0.00	0.00	0.39	0.00	0.39	0.00	0.61	0.00	0.00	0.61	0.00
Volume/Cap:	0.00	0.00	0.00	0.71	0.00	0.43	0.00	0.43	0.00	0.00	0.71	0.00
Delay/Veh:	0.0	0.0	0.0	27.0	0.0	22.4	0.0	10.5	0.0	0.0	14.3	0.0
User DelAdj:	1.00	1.00	1.00	1.00	1.00	1.00	1.00	1.00	1.00	1.00	1.00	1.00
AdjDel/Veh:	0.0	0.0	0.0	27.0	0.0	22.4	0.0	10.5	0.0	0.0	14.3	0.0
LOS by Move:	A	A	A	C	A	C	A	B	A	A	B	A
HCM2kAvgQ:	0	0	0	14	0	7	0	8	0	0	18	0

Note: Queue reported is the number of cars per lane.

City of Murrieta General Plan
Existing General Plan
AM Peak Hour

Level Of Service Computation Report
2000 HCM Operations Method (Future Volume Alternative)

Intersection #31 I-15 NB Off-Ramp & Murrieta Hot Springs Road

Cycle (sec): 100 Critical Vol./Cap.(X): 0.390
Loss Time (sec): 0 (Y+R=4.0 sec) Average Delay (sec/veh): 5.8
Optimal Cycle: 37 Level Of Service: A

Street Name:	I-15 NB Off-Ramp						Murrieta Hot Springs Road					
Approach:	North Bound			South Bound			East Bound			West Bound		
Movement:	L	T	R	L	T	R	L	T	R	L	T	R
Control:	Protected			Protected			Protected			Protected		
Rights:	Include			Include			Ignore			Ignore		
Min. Green:	0	0	0	0	0	0	0	0	0	0	0	0
Lanes:	2	0 0	0 1	0	0 0	0 0	0	0 4	0 1	0	0 4	0 1
Volume Module:												
Base Vol:	281	0	73	0	0	0	0	2144	181	0	1455	627
Growth Adj:	1.00	1.00	1.00	1.00	1.00	1.00	1.00	1.00	1.00	1.00	1.00	1.00
Initial Bse:	281	0	73	0	0	0	0	2144	181	0	1455	627
Added Vol:	0	0	0	0	0	0	0	0	0	0	0	0
PasserByVol:	0	0	0	0	0	0	0	0	0	0	0	0
Initial Fut:	281	0	73	0	0	0	0	2144	181	0	1455	627
User Adj:	1.00	1.00	1.00	1.00	1.00	1.00	1.00	1.00	0.00	1.00	1.00	0.00
PHF Adj:	1.00	1.00	1.00	1.00	1.00	1.00	1.00	1.00	0.00	1.00	1.00	0.00
PHF Volume:	281	0	73	0	0	0	0	2144	0	0	1455	0
Reduct Vol:	0	0	0	0	0	0	0	0	0	0	0	0
Reduced Vol:	281	0	73	0	0	0	0	2144	0	0	1455	0
PCE Adj:	1.00	1.00	1.00	1.00	1.00	1.00	1.00	1.00	0.00	1.00	1.00	0.00
MLF Adj:	1.00	1.00	1.00	1.00	1.00	1.00	1.00	1.00	0.00	1.00	1.00	0.00
FinalVolume:	281	0	73	0	0	0	0	2144	0	0	1455	0
Saturation Flow Module:												
Sat/Lane:	1900	1900	1900	1900	1900	1900	1900	1900	1900	1900	1900	1900
Adjustment:	0.92	1.00	0.85	1.00	1.00	1.00	1.00	0.91	1.00	1.00	0.91	1.00
Lanes:	2.00	0.00	1.00	0.00	0.00	0.00	0.00	4.00	1.00	0.00	4.00	1.00
Final Sat.:	3502	0	1615	0	0	0	0	6916	1900	0	6916	1900
Capacity Analysis Module:												
Vol/Sat:	0.08	0.00	0.05	0.00	0.00	0.00	0.00	0.31	0.00	0.00	0.21	0.00
Crit Moves:	****							****		****		
Green/Cycle:	0.21	0.00	0.21	0.00	0.00	0.00	0.00	0.79	0.00	0.00	0.79	0.00
Volume/Cap:	0.39	0.00	0.22	0.00	0.00	0.00	0.00	0.39	0.00	0.00	0.26	0.00
Delay/Veh:	34.7	0.0	33.4	0.0	0.0	0.0	0.0	3.1	0.0	0.0	2.7	0.0
User DelAdj:	1.00	1.00	1.00	1.00	1.00	1.00	1.00	1.00	1.00	1.00	1.00	1.00
AdjDel/Veh:	34.7	0.0	33.4	0.0	0.0	0.0	0.0	3.1	0.0	0.0	2.7	0.0
LOS by Move:	C	A	C	A	A	A	A	A	A	A	A	A
HCM2kAvgQ:	4	0	2	0	0	0	0	6	0	0	3	0

Note: Queue reported is the number of cars per lane.

City of Murrieta General Plan
Existing General Plan
AM Peak Hour

Level Of Service Computation Report
2000 HCM Operations Method (Future Volume Alternative)

Intersection #32 I-215 SB Off-Ramp & Murrieta Hot Springs Road

Cycle (sec): 100 Critical Vol./Cap.(X): 0.690
Loss Time (sec): 0 (Y+R=4.0 sec) Average Delay (sec/veh): 12.4
Optimal Cycle: 60 Level Of Service: B

Street Name:	I-215 SB Off-Ramp						Murrieta Hot Springs Road					
Approach:	North Bound			South Bound			East Bound			West Bound		
Movement:	L	T	R	L	T	R	L	T	R	L	T	R
Control:	Protected			Protected			Permitted			Permitted		
Rights:	Include			Include			Ignore			Ignore		
Min. Green:	0	0	0	0	0	0	0	0	0	0	0	0
Lanes:	0	0 0	0 0	1	0 1!	0 1	0	0 3	0 1	0	0 3	0 1
Volume Module:												
Base Vol:	0	0	0	541	0	438	0	1944	53	0	2529	378
Growth Adj:	1.00	1.00	1.00	1.00	1.00	1.00	1.00	1.00	1.00	1.00	1.00	1.00
Initial Bse:	0	0	0	541	0	438	0	1944	53	0	2529	378
Added Vol:	0	0	0	0	0	0	0	0	0	0	0	0
PasserByVol:	0	0	0	0	0	0	0	0	0	0	0	0
Initial Fut:	0	0	0	541	0	438	0	1944	53	0	2529	378
User Adj:	1.00	1.00	1.00	1.00	1.00	1.00	1.00	1.00	0.00	1.00	1.00	0.00
PHF Adj:	1.00	1.00	1.00	1.00	1.00	1.00	1.00	1.00	0.00	1.00	1.00	0.00
PHF Volume:	0	0	0	541	0	438	0	1944	0	0	2529	0
Reduct Vol:	0	0	0	0	0	0	0	0	0	0	0	0
Reduced Vol:	0	0	0	541	0	438	0	1944	0	0	2529	0
PCE Adj:	1.00	1.00	1.00	1.00	1.00	1.00	1.00	1.00	0.00	1.00	1.00	0.00
MLF Adj:	1.00	1.00	1.00	1.00	1.00	1.00	1.00	1.00	0.00	1.00	1.00	0.00
FinalVolume:	0	0	0	541	0	438	0	1944	0	0	2529	0
Saturation Flow Module:												
Sat/Lane:	1900	1900	1900	1900	1900	1900	1900	1900	1900	1900	1900	1900
Adjustment:	1.00	1.00	1.00	0.91	1.00	0.91	1.00	0.91	1.00	1.00	0.91	1.00
Lanes:	0.00	0.00	0.00	1.55	0.00	1.45	0.00	3.00	1.00	0.00	3.00	1.00
Final Sat.:	0	0	0	2678	0	2497	0	5187	1900	0	5187	1900
Capacity Analysis Module:												
Vol/Sat:	0.00	0.00	0.00	0.20	0.00	0.18	0.00	0.37	0.00	0.00	0.49	0.00
Crit Moves:				****							****	
Green/Cycle:	0.00	0.00	0.00	0.29	0.00	0.29	0.00	0.71	0.00	0.00	0.71	0.00
Volume/Cap:	0.00	0.00	0.00	0.69	0.00	0.60	0.00	0.53	0.00	0.00	0.69	0.00
Delay/Veh:	0.0	0.0	0.0	32.8	0.0	30.9	0.0	7.0	0.0	0.0	8.9	0.0
User DelAdj:	1.00	1.00	1.00	1.00	1.00	1.00	1.00	1.00	1.00	1.00	1.00	1.00
AdjDel/Veh:	0.0	0.0	0.0	32.8	0.0	30.9	0.0	7.0	0.0	0.0	8.9	0.0
LOS by Move:	A	A	A	C	A	C	A	A	A	A	A	A
HCM2kAvgQ:	0	0	0	11	0	9	0	10	0	0	17	0

Note: Queue reported is the number of cars per lane.

City of Murrieta General Plan
Existing General Plan
AM Peak Hour

Level Of Service Computation Report
2000 HCM Operations Method (Future Volume Alternative)

Intersection #33 I-215 NB Off-Ramp & Murrieta Hot Springs Road

Cycle (sec): 100 Critical Vol./Cap.(X): 0.596
Loss Time (sec): 0 (Y+R=4.0 sec) Average Delay (sec/veh): 5.6
Optimal Cycle: 46 Level Of Service: A

Street Name:	I-215 NB Off-Ramp						Murrieta Hot Springs Road					
Approach:	North Bound			South Bound			East Bound			West Bound		
Movement:	L	T	R	L	T	R	L	T	R	L	T	R
Control:	Protected			Protected			Permitted			Permitted		
Rights:	Include			Include			Ignore			Ignore		
Min. Green:	0	0	0	0	0	0	0	0	0	0	0	0
Lanes:	2	0	0	0	2	0	0	0	0	0	0	1
Volume Module:												
Base Vol:	347	0	19	0	0	0	0	1588	115	0	2578	679
Growth Adj:	1.00	1.00	1.00	1.00	1.00	1.00	1.00	1.00	1.00	1.00	1.00	1.00
Initial Bse:	347	0	19	0	0	0	0	1588	115	0	2578	679
Added Vol:	0	0	0	0	0	0	0	0	0	0	0	0
PasserByVol:	0	0	0	0	0	0	0	0	0	0	0	0
Initial Fut:	347	0	19	0	0	0	0	1588	115	0	2578	679
User Adj:	1.00	1.00	1.00	1.00	1.00	1.00	1.00	1.00	0.00	1.00	1.00	0.00
PHF Adj:	1.00	1.00	1.00	1.00	1.00	1.00	1.00	1.00	0.00	1.00	1.00	0.00
PHF Volume:	347	0	19	0	0	0	0	1588	0	0	2578	0
Reduct Vol:	0	0	0	0	0	0	0	0	0	0	0	0
Reduced Vol:	347	0	19	0	0	0	0	1588	0	0	2578	0
PCE Adj:	1.00	1.00	1.00	1.00	1.00	1.00	1.00	1.00	0.00	1.00	1.00	0.00
MLF Adj:	1.00	1.00	1.00	1.00	1.00	1.00	1.00	1.00	0.00	1.00	1.00	0.00
FinalVolume:	347	0	19	0	0	0	0	1588	0	0	2578	0
Saturation Flow Module:												
Sat/Lane:	1900	1900	1900	1900	1900	1900	1900	1900	1900	1900	1900	1900
Adjustment:	0.92	1.00	0.75	1.00	1.00	1.00	1.00	0.91	1.00	1.00	0.91	1.00
Lanes:	2.00	0.00	2.00	0.00	0.00	0.00	0.00	3.00	1.00	0.00	3.00	1.00
Final Sat.:	3502	0	2842	0	0	0	0	5187	1900	0	5187	1900
Capacity Analysis Module:												
Vol/Sat:	0.10	0.00	0.01	0.00	0.00	0.00	0.00	0.31	0.00	0.00	0.50	0.00
Crit Moves:	****										****	
Green/Cycle:	0.17	0.00	0.17	0.00	0.00	0.00	0.00	0.83	0.00	0.00	0.83	0.00
Volume/Cap:	0.60	0.00	0.04	0.00	0.00	0.00	0.00	0.37	0.00	0.00	0.60	0.00
Delay/Veh:	40.3	0.0	35.0	0.0	0.0	0.0	0.0	2.0	0.0	0.0	3.0	0.0
User DelAdj:	1.00	1.00	1.00	1.00	1.00	1.00	1.00	1.00	1.00	1.00	1.00	1.00
AdjDel/Veh:	40.3	0.0	35.0	0.0	0.0	0.0	0.0	2.0	0.0	0.0	3.0	0.0
LOS by Move:	D	A	D	A	A	A	A	A	A	A	A	A
HCM2kAvgQ:	6	0	0	0	0	0	0	4	0	0	10	0

Note: Queue reported is the number of cars per lane.

City of Murrieta General Plan
Existing General Plan
AM Peak Hour

Level Of Service Computation Report
2000 HCM Operations Method (Future Volume Alternative)

Intersection #34 Jackson Avenue & Murrieta Hot Springs Road

Cycle (sec): 100 Critical Vol./Cap.(X): 0.407
Loss Time (sec): 0 (Y+R=4.0 sec) Average Delay (sec/veh): 5.3
Optimal Cycle: 38 Level Of Service: A

Street Name:	Jackson Avenue						Murrieta Hot Springs Road					
Approach:	North Bound			South Bound			East Bound			West Bound		
Movement:	L	T	R	L	T	R	L	T	R	L	T	R
Control:	Protected			Protected			Protected			Protected		
Rights:	Include			Include			Include			Include		
Min. Green:	0	0	0	0	0	0	0	0	0	0	0	0
Lanes:	2	0	0	0	2	0	0	0	0	0	0	0
Volume Module:												
Base Vol:	70	0	51	0	0	0	0	1218	43	159	2010	0
Growth Adj:	1.00	1.00	1.00	1.00	1.00	1.00	1.00	1.00	1.00	1.00	1.00	1.00
Initial Bse:	70	0	51	0	0	0	0	1218	43	159	2010	0
Added Vol:	0	0	0	0	0	0	0	0	0	0	0	0
PasserByVol:	0	0	0	0	0	0	0	0	0	0	0	0
Initial Fut:	70	0	51	0	0	0	0	1218	43	159	2010	0
User Adj:	1.00	1.00	1.00	1.00	1.00	1.00	1.00	1.00	1.00	1.00	1.00	1.00
PHF Adj:	1.00	1.00	1.00	1.00	1.00	1.00	1.00	1.00	1.00	1.00	1.00	1.00
PHF Volume:	70	0	51	0	0	0	0	1218	43	159	2010	0
Reduct Vol:	0	0	0	0	0	0	0	0	0	0	0	0
Reduced Vol:	70	0	51	0	0	0	0	1218	43	159	2010	0
PCE Adj:	1.00	1.00	1.00	1.00	1.00	1.00	1.00	1.00	1.00	1.00	1.00	1.00
MLF Adj:	1.00	1.00	1.00	1.00	1.00	1.00	1.00	1.00	1.00	1.00	1.00	1.00
FinalVolume:	70	0	51	0	0	0	0	1218	43	159	2010	0
Saturation Flow Module:												
Sat/Lane:	1900	1900	1900	1900	1900	1900	1900	1900	1900	1900	1900	1900
Adjustment:	0.92	1.00	0.75	1.00	1.00	1.00	1.00	0.91	0.85	0.95	0.91	1.00
Lanes:	2.00	0.00	2.00	0.00	0.00	0.00	0.00	3.00	1.00	1.00	3.00	0.00
Final Sat.:	3502	0	2842	0	0	0	0	5187	1615	1805	5187	0
Capacity Analysis Module:												
Vol/Sat:	0.02	0.00	0.02	0.00	0.00	0.00	0.00	0.23	0.03	0.09	0.39	0.00
Crit Moves:	****						****				****	
Green/Cycle:	0.05	0.00	0.05	0.00	0.00	0.00	0.00	0.69	0.69	0.26	0.95	0.00
Volume/Cap:	0.41	0.00	0.37	0.00	0.00	0.00	0.00	0.34	0.04	0.34	0.41	0.00
Delay/Veh:	47.7	0.0	47.7	0.0	0.0	0.0	0.0	6.3	4.9	30.5	0.3	0.0
User DelAdj:	1.00	1.00	1.00	1.00	1.00	1.00	1.00	1.00	1.00	1.00	1.00	1.00
AdjDel/Veh:	47.7	0.0	47.7	0.0	0.0	0.0	0.0	6.3	4.9	30.5	0.3	0.0
LOS by Move:	D	A	D	A	A	A	A	A	A	C	A	A
HCM2kAvgQ:	2	0	1	0	0	0	0	6	0	4	2	0

Note: Queue reported is the number of cars per lane.

City of Murrieta General Plan
Existing General Plan
AM Peak Hour

Level Of Service Computation Report
2000 HCM Operations Method (Future Volume Alternative)

Intersection #35 Margarita Road & Murrieta Hot Springs Road

Cycle (sec): 100 Critical Vol./Cap.(X): 0.659
Loss Time (sec): 0 (Y+R=4.0 sec) Average Delay (sec/veh): 24.4
Optimal Cycle: 67 Level Of Service: C

Street Name:	Margarita Road						Murrieta Hot Springs Road					
Approach:	North Bound			South Bound			East Bound			West Bound		
Movement:	L -	T -	R	L -	T -	R	L -	T -	R	L -	T -	R
Control:	Split Phase			Split Phase			Protected			Protected		
Rights:	Include			Include			Include			Include		
Min. Green:	0	0	0	0	0	0	0	0	0	0	0	0
Lanes:	2 0	1 0	1	0 1	0 0	1	1 0	2 1	0	1 0	2 1	0
Volume Module:												
Base Vol:	616	60	128	42	17	6	163	749	462	302	1723	71
Growth Adj:	1.00	1.00	1.00	1.00	1.00	1.00	1.00	1.00	1.00	1.00	1.00	1.00
Initial Bse:	616	60	128	42	17	6	163	749	462	302	1723	71
Added Vol:	0	0	0	0	0	0	0	0	0	0	0	0
PasserByVol:	0	0	0	0	0	0	0	0	0	0	0	0
Initial Fut:	616	60	128	42	17	6	163	749	462	302	1723	71
User Adj:	1.00	1.00	1.00	1.00	1.00	1.00	1.00	1.00	1.00	1.00	1.00	1.00
PHF Adj:	1.00	1.00	1.00	1.00	1.00	1.00	1.00	1.00	1.00	1.00	1.00	1.00
PHF Volume:	616	60	128	42	17	6	163	749	462	302	1723	71
Reduct Vol:	0	0	0	0	0	0	0	0	0	0	0	0
Reduced Vol:	616	60	128	42	17	6	163	749	462	302	1723	71
PCE Adj:	1.00	1.00	1.00	1.00	1.00	1.00	1.00	1.00	1.00	1.00	1.00	1.00
MLF Adj:	1.00	1.00	1.00	1.00	1.00	1.00	1.00	1.00	1.00	1.00	1.00	1.00
FinalVolume:	616	60	128	42	17	6	163	749	462	302	1723	71
Saturation Flow Module:												
Sat/Lane:	1900	1900	1900	1900	1900	1900	1900	1900	1900	1900	1900	1900
Adjustment:	0.92	1.00	0.85	0.97	0.97	0.85	0.95	0.86	0.86	0.95	0.90	0.90
Lanes:	2.00	1.00	1.00	0.71	0.29	1.00	1.00	2.00	1.00	1.00	2.88	0.12
Final Sat.:	3502	1900	1615	1307	529	1615	1805	3261	1630	1805	4952	204
Capacity Analysis Module:												
Vol/Sat:	0.18	0.03	0.08	0.03	0.03	0.00	0.09	0.23	0.28	0.17	0.35	0.35
Crit Moves:	****			****					****	****		
Green/Cycle:	0.27	0.27	0.27	0.05	0.05	0.05	0.14	0.43	0.43	0.25	0.54	0.54
Volume/Cap:	0.66	0.12	0.30	0.66	0.66	0.08	0.64	0.53	0.66	0.66	0.64	0.64
Delay/Veh:	34.3	27.8	29.6	63.3	63.3	45.8	46.0	21.3	23.5	36.9	16.5	16.5
User DelAdj:	1.00	1.00	1.00	1.00	1.00	1.00	1.00	1.00	1.00	1.00	1.00	1.00
AdjDel/Veh:	34.3	27.8	29.6	63.3	63.3	45.8	46.0	21.3	23.5	36.9	16.5	16.5
LOS by Move:	C	C	C	E	E	D	D	C	C	D	B	B
HCM2kAvgQ:	10	1	3	3	3	0	6	10	13	9	15	15

Note: Queue reported is the number of cars per lane.

City of Murrieta General Plan
Existing General Plan
AM Peak Hour

Level Of Service Computation Report
2000 HCM Operations Method (Future Volume Alternative)

Intersection #36 French Valley Parkway & Murrieta Hot Springs Road

Cycle (sec): 100 Critical Vol./Cap.(X): 0.709
Loss Time (sec): 0 (Y+R=4.0 sec) Average Delay (sec/veh): 12.7
Optimal Cycle: 78 Level Of Service: B

Street Name:	French Valley Parkway						Murrieta Hot Springs Road					
Approach:	North Bound			South Bound			East Bound			West Bound		
Movement:	L -	T -	R	L -	T -	R	L -	T -	R	L -	T -	R
Control:	Protected			Protected			Protected			Protected		
Rights:	Ovl			Include			Include			Include		
Min. Green:	0	0	0	0	0	0	0	0	0	0	0	0
Lanes:	1 0	0 0	2	0 0	0 0	0	0 0	2 1	0	1 0	3 0	0
Volume Module:												
Base Vol:	20	0	821	0	0	0	0	1224	277	723	1947	0
Growth Adj:	1.00	1.00	1.00	1.00	1.00	1.00	1.00	1.00	1.00	1.00	1.00	1.00
Initial Bse:	20	0	821	0	0	0	0	1224	277	723	1947	0
Added Vol:	0	0	0	0	0	0	0	0	0	0	0	0
PasserByVol:	0	0	0	0	0	0	0	0	0	0	0	0
Initial Fut:	20	0	821	0	0	0	0	1224	277	723	1947	0
User Adj:	1.00	1.00	1.00	1.00	1.00	1.00	1.00	1.00	1.00	1.00	1.00	1.00
PHF Adj:	1.00	1.00	1.00	1.00	1.00	1.00	1.00	1.00	1.00	1.00	1.00	1.00
PHF Volume:	20	0	821	0	0	0	0	1224	277	723	1947	0
Reduct Vol:	0	0	0	0	0	0	0	0	0	0	0	0
Reduced Vol:	20	0	821	0	0	0	0	1224	277	723	1947	0
PCE Adj:	1.00	1.00	1.00	1.00	1.00	1.00	1.00	1.00	1.00	1.00	1.00	1.00
MLF Adj:	1.00	1.00	1.00	1.00	1.00	1.00	1.00	1.00	1.00	1.00	1.00	1.00
FinalVolume:	20	0	821	0	0	0	0	1224	277	723	1947	0
Saturation Flow Module:												
Sat/Lane:	1900	1900	1900	1900	1900	1900	1900	1900	1900	1900	1900	1900
Adjustment:	0.95	1.00	0.75	1.00	1.00	1.00	1.00	0.88	0.88	0.95	0.91	1.00
Lanes:	1.00	0.00	2.00	0.00	0.00	0.00	0.00	2.45	0.55	1.00	3.00	0.00
Final Sat.:	1805	0	2842	0	0	0	0	4111	930	1805	5187	0
Capacity Analysis Module:												
Vol/Sat:	0.01	0.00	0.29	0.00	0.00	0.00	0.00	0.30	0.30	0.40	0.38	0.00
Crit Moves:	****							****		****		
Green/Cycle:	0.02	0.00	0.58	0.00	0.00	0.00	0.00	0.42	0.42	0.56	0.98	0.00
Volume/Cap:	0.71	0.00	0.50	0.00	0.00	0.00	0.00	0.71	0.71	0.71	0.38	0.00
Delay/Veh:	108.3	0.0	12.6	0.0	0.0	0.0	0.0	25.1	25.1	18.1	0.1	0.0
User DelAdj:	1.00	1.00	1.00	1.00	1.00	1.00	1.00	1.00	1.00	1.00	1.00	1.00
AdjDel/Veh:	108.3	0.0	12.6	0.0	0.0	0.0	0.0	25.1	25.1	18.1	0.1	0.0
LOS by Move:	F	A	B	A	A	A	A	C	C	B	A	A
HCM2kAvgQ:	2	0	9	0	0	0	0	15	15	17	1	0

Note: Queue reported is the number of cars per lane.

City of Murrieta General Plan
Existing General Plan
AM Peak Hour

Level Of Service Computation Report
2000 HCM Operations Method (Future Volume Alternative)

Intersection #37 Jefferson Avenue & Guava Street

Cycle (sec): 100 Critical Vol./Cap.(X): 0.489
Loss Time (sec): 0 (Y+R=4.0 sec) Average Delay (sec/veh): 9.8
Optimal Cycle: 36 Level Of Service: A

Street Name:	Jefferson Avenue						Guava Street					
Approach:	North Bound			South Bound			East Bound			West Bound		
Movement:	L	T	R	L	T	R	L	T	R	L	T	R
Control:	Protected			Protected			Permitted			Permitted		
Rights:	Include			Include			Include			Include		
Min. Green:	0	0	0	0	0	0	0	0	0	0	0	0
Lanes:	1	0 2	1 0	1	0 2	1 0	1	0 0	1 0	1	0 1	1 0
Volume Module:												
Base Vol:	26	1339	1	3	1360	322	190	55	105	2	33	9
Growth Adj:	1.00	1.00	1.00	1.00	1.00	1.00	1.00	1.00	1.00	1.00	1.00	1.00
Initial Bse:	26	1339	1	3	1360	322	190	55	105	2	33	9
Added Vol:	0	0	0	0	0	0	0	0	0	0	0	0
PasserByVol:	0	0	0	0	0	0	0	0	0	0	0	0
Initial Fut:	26	1339	1	3	1360	322	190	55	105	2	33	9
User Adj:	1.00	1.00	1.00	1.00	1.00	1.00	1.00	1.00	1.00	1.00	1.00	1.00
PHF Adj:	1.00	1.00	1.00	1.00	1.00	1.00	1.00	1.00	1.00	1.00	1.00	1.00
PHF Volume:	26	1339	1	3	1360	322	190	55	105	2	33	9
Reduct Vol:	0	0	0	0	0	0	0	0	0	0	0	0
Reduced Vol:	26	1339	1	3	1360	322	190	55	105	2	33	9
PCE Adj:	1.00	1.00	1.00	1.00	1.00	1.00	1.00	1.00	1.00	1.00	1.00	1.00
MLF Adj:	1.00	1.00	1.00	1.00	1.00	1.00	1.00	1.00	1.00	1.00	1.00	1.00
FinalVolume:	26	1339	1	3	1360	322	190	55	105	2	33	9
Saturation Flow Module:												
Sat/Lane:	1900	1900	1900	1900	1900	1900	1900	1900	1900	1900	1900	1900
Adjustment:	0.95	0.91	0.91	0.95	0.88	0.88	0.71	0.90	0.90	0.48	0.92	0.92
Lanes:	1.00	2.99	0.01	1.00	2.43	0.57	1.00	0.34	0.66	1.00	1.57	0.43
Final Sat.:	1805	5183	4	1805	4072	964	1353	589	1125	910	2746	749
Capacity Analysis Module:												
Vol/Sat:	0.01	0.26	0.26	0.00	0.33	0.33	0.14	0.09	0.09	0.00	0.01	0.01
Crit Moves:	****				****		****					
Green/Cycle:	0.03	0.71	0.71	0.00	0.68	0.68	0.29	0.29	0.29	0.29	0.29	0.29
Volume/Cap:	0.49	0.36	0.36	0.36	0.49	0.49	0.49	0.32	0.32	0.01	0.04	0.04
Delay/Veh:	54.7	5.8	5.8	75.0	7.6	7.6	30.5	28.4	28.4	25.5	25.7	25.7
User DelAdj:	1.00	1.00	1.00	1.00	1.00	1.00	1.00	1.00	1.00	1.00	1.00	1.00
AdjDel/Veh:	54.7	5.8	5.8	75.0	7.6	7.6	30.5	28.4	28.4	25.5	25.7	25.7
LOS by Move:	D	A	A	E	A	A	C	C	C	C	C	C
HCM2kAvgQ:	1	6	6	0	9	9	5	4	4	0	0	0

Note: Queue reported is the number of cars per lane.

City of Murrieta General Plan
Existing General Plan
AM Peak Hour

Level Of Service Computation Report
2000 HCM Operations Method (Future Volume Alternative)

Intersection #39 Washington Ave & Calle Del Oso Oro/Nutmeg

Cycle (sec): 100 Critical Vol./Cap.(X): 0.659
Loss Time (sec): 0 (Y+R=4.0 sec) Average Delay (sec/veh): 26.5
Optimal Cycle: 67 Level Of Service: C

Street Name:	Washington Ave						Calle Del Oso Oro/Nutmeg					
Approach:	North Bound			South Bound			East Bound			West Bound		
Movement:	L	T	R	L	T	R	L	T	R	L	T	R
Control:	Protected			Protected			Protected			Protected		
Rights:	Include			Include			Include			Include		
Min. Green:	0	0	0	0	0	0	0	0	0	0	0	0
Lanes:	1	0 2	1 0	1	0 2	1 0	1	0 1	1 0	1	0 1	1 0
Volume Module:												
Base Vol:	251	159	122	92	196	90	64	602	638	143	205	42
Growth Adj:	1.00	1.00	1.00	1.00	1.00	1.00	1.00	1.00	1.00	1.00	1.00	1.00
Initial Bse:	251	159	122	92	196	90	64	602	638	143	205	42
Added Vol:	0	0	0	0	0	0	0	0	0	0	0	0
PasserByVol:	0	0	0	0	0	0	0	0	0	0	0	0
Initial Fut:	251	159	122	92	196	90	64	602	638	143	205	42
User Adj:	1.00	1.00	1.00	1.00	1.00	1.00	1.00	1.00	1.00	1.00	1.00	1.00
PHF Adj:	1.00	1.00	1.00	1.00	1.00	1.00	1.00	1.00	1.00	1.00	1.00	1.00
PHF Volume:	251	159	122	92	196	90	64	602	638	143	205	42
Reduct Vol:	0	0	0	0	0	0	0	0	0	0	0	0
Reduced Vol:	251	159	122	92	196	90	64	602	638	143	205	42
PCE Adj:	1.00	1.00	1.00	1.00	1.00	1.00	1.00	1.00	1.00	1.00	1.00	1.00
MLF Adj:	1.00	1.00	1.00	1.00	1.00	1.00	1.00	1.00	1.00	1.00	1.00	1.00
FinalVolume:	251	159	122	92	196	90	64	602	638	143	205	42
Saturation Flow Module:												
Sat/Lane:	1900	1900	1900	1900	1900	1900	1900	1900	1900	1900	1900	1900
Adjustment:	0.95	0.85	0.85	0.95	0.87	0.87	0.95	0.88	0.88	0.95	0.93	0.93
Lanes:	1.00	2.00	1.00	1.00	2.06	0.94	1.00	1.00	1.00	1.00	1.66	0.34
Final Sat.:	1805	3233	1617	1805	3388	1556	1805	1666	1666	1805	2921	599
Capacity Analysis Module:												
Vol/Sat:	0.14	0.05	0.08	0.05	0.06	0.06	0.04	0.36	0.38	0.08	0.07	0.07
Crit Moves:	****				****				****	****		
Green/Cycle:	0.21	0.18	0.18	0.12	0.09	0.09	0.24	0.58	0.58	0.12	0.47	0.47
Volume/Cap:	0.66	0.28	0.42	0.42	0.66	0.66	0.15	0.62	0.66	0.66	0.15	0.15
Delay/Veh:	40.4	35.7	36.9	42.1	47.9	47.9	30.5	14.4	15.1	49.3	15.4	15.4
User DelAdj:	1.00	1.00	1.00	1.00	1.00	1.00	1.00	1.00	1.00	1.00	1.00	1.00
AdjDel/Veh:	40.4	35.7	36.9	42.1	47.9	47.9	30.5	14.4	15.1	49.3	15.4	15.4
LOS by Move:	D	D	D	D	D	D	C	B	B	D	B	B
HCM2kAvgQ:	8	2	4	3	4	4	2	13	15	5	2	2

Note: Queue reported is the number of cars per lane.

City of Murrieta General Plan
Existing General Plan
AM Peak Hour

Level Of Service Computation Report
2000 HCM Operations Method (Future Volume Alternative)

Intersection #40 Clinton Keith Rd & Calle de Oso Oro/Bear Creek Dr

Cycle (sec): 100 Critical Vol./Cap.(X): 0.914
Loss Time (sec): 0 (Y+R=4.0 sec) Average Delay (sec/veh): 21.5
Optimal Cycle: 180 Level Of Service: C

Street Name:	Clinton Keith Rd						Calle de Oso Oro/Bear Creek Dr					
Approach:	North Bound			South Bound			East Bound			West Bound		
Movement:	L - T - R			L - T - R			L - T - R			L - T - R		
Control:	Protected			Protected			Permitted			Permitted		
Rights:	Include			Include			Include			Include		
Min. Green:	0	0	0	0	0	0	0	0	0	0	0	0
Lanes:	1 0	1	1 0	1 0	1	1 0	1 0	0	1 0	1 0	1	1 0
Volume Module:												
Base Vol:	58	108	274	5	112	197	266	612	147	410	614	22
Growth Adj:	1.00	1.00	1.00	1.00	1.00	1.00	1.00	1.00	1.00	1.00	1.00	1.00
Initial Bse:	58	108	274	5	112	197	266	612	147	410	614	22
Added Vol:	0	0	0	0	0	0	0	0	0	0	0	0
PasserByVol:	0	0	0	0	0	0	0	0	0	0	0	0
Initial Fut:	58	108	274	5	112	197	266	612	147	410	614	22
User Adj:	1.00	1.00	1.00	1.00	1.00	1.00	1.00	1.00	1.00	1.00	1.00	1.00
PHF Adj:	1.00	1.00	1.00	1.00	1.00	1.00	1.00	1.00	1.00	1.00	1.00	1.00
PHF Volume:	58	108	274	5	112	197	266	612	147	410	614	22
Reduct Vol:	0	0	0	0	0	0	0	0	0	0	0	0
Reduced Vol:	58	108	274	5	112	197	266	612	147	410	614	22
PCE Adj:	1.00	1.00	1.00	1.00	1.00	1.00	1.00	1.00	1.00	1.00	1.00	1.00
MLF Adj:	1.00	1.00	1.00	1.00	1.00	1.00	1.00	1.00	1.00	1.00	1.00	1.00
FinalVolume:	58	108	274	5	112	197	266	612	147	410	614	22
Saturation Flow Module:												
Sat/Lane:	1900	1900	1900	1900	1900	1900	1900	1900	1900	1900	1900	1900
Adjustment:	0.95	0.85	0.85	0.95	0.86	0.86	0.40	0.97	0.97	0.29	0.95	0.95
Lanes:	1.00	1.00	1.00	1.00	1.00	1.00	1.00	0.81	0.19	1.00	1.93	0.07
Final Sat.:	1805	1610	1610	1805	1632	1632	754	1488	357	553	3468	124
Capacity Analysis Module:												
Vol/Sat:	0.03	0.07	0.17	0.00	0.07	0.12	0.35	0.41	0.41	0.74	0.18	0.18
Crit Moves:			****	****						****		
Green/Cycle:	0.04	0.19	0.19	0.00	0.15	0.15	0.81	0.81	0.81	0.81	0.81	0.81
Volume/Cap:	0.81	0.36	0.91	0.91	0.46	0.81	0.43	0.51	0.51	0.91	0.22	0.22
Delay/Veh:	95.0	35.7	64.3	373.1	39.3	53.2	3.3	3.3	3.3	30.1	2.2	2.2
User DelAdj:	1.00	1.00	1.00	1.00	1.00	1.00	1.00	1.00	1.00	1.00	1.00	1.00
AdjDel/Veh:	95.0	35.7	64.3	373.1	39.3	53.2	3.3	3.3	3.3	30.1	2.2	2.2
LOS by Move:	F	D	E	F	D	D	A	A	A	C	A	A
HCM2kAvgQ:	4	3	12	1	4	8	3	8	8	13	2	2

Note: Queue reported is the number of cars per lane.

City of Murrieta General Plan
Existing General Plan
AM Peak Hour

Level Of Service Computation Report
2000 HCM Operations Method (Future Volume Alternative)

Intersection #43 Jefferson Ave & Lemon St

Cycle (sec): 100 Critical Vol./Cap.(X): 0.798
Loss Time (sec): 0 (Y+R=4.0 sec) Average Delay (sec/veh): 18.2
Optimal Cycle: 113 Level Of Service: B

Street Name:	Jefferson Ave						Lemon St					
Approach:	North Bound			South Bound			East Bound			West Bound		
Movement:	L - T - R			L - T - R			L - T - R			L - T - R		
Control:	Protected			Protected			Protected			Protected		
Rights:	Include			Include			Include			Include		
Min. Green:	0	0	0	0	0	0	0	0	0	0	0	0
Lanes:	1 0	2	1 0	1 0	2	1 0	1 0	1	0 1	1 0	0	1 0
Volume Module:												
Base Vol:	249	774	28	4	2426	152	30	3	251	6	10	6
Growth Adj:	1.00	1.00	1.00	1.00	1.00	1.00	1.00	1.00	1.00	1.00	1.00	1.00
Initial Bse:	249	774	28	4	2426	152	30	3	251	6	10	6
Added Vol:	0	0	0	0	0	0	0	0	0	0	0	0
PasserByVol:	0	0	0	0	0	0	0	0	0	0	0	0
Initial Fut:	249	774	28	4	2426	152	30	3	251	6	10	6
User Adj:	1.00	1.00	1.00	1.00	1.00	1.00	1.00	1.00	1.00	1.00	1.00	1.00
PHF Adj:	1.00	1.00	1.00	1.00	1.00	1.00	1.00	1.00	1.00	1.00	1.00	1.00
PHF Volume:	249	774	28	4	2426	152	30	3	251	6	10	6
Reduct Vol:	0	0	0	0	0	0	0	0	0	0	0	0
Reduced Vol:	249	774	28	4	2426	152	30	3	251	6	10	6
PCE Adj:	1.00	1.00	1.00	1.00	1.00	1.00	1.00	1.00	1.00	1.00	1.00	1.00
MLF Adj:	1.00	1.00	1.00	1.00	1.00	1.00	1.00	1.00	1.00	1.00	1.00	1.00
FinalVolume:	249	774	28	4	2426	152	30	3	251	6	10	6
Saturation Flow Module:												
Sat/Lane:	1900	1900	1900	1900	1900	1900	1900	1900	1900	1900	1900	1900
Adjustment:	0.95	0.91	0.91	0.95	0.90	0.90	0.95	1.00	0.85	0.95	0.94	0.94
Lanes:	1.00	2.90	0.10	1.00	2.82	0.18	1.00	1.00	1.00	1.00	0.62	0.38
Final Sat.:	1805	4981	180	1805	4837	303	1805	1900	1615	1805	1121	673
Capacity Analysis Module:												
Vol/Sat:	0.14	0.16	0.16	0.00	0.50	0.50	0.02	0.00	0.16	0.00	0.01	0.01
Crit Moves:	****				****				****	****		
Green/Cycle:	0.17	0.79	0.79	0.01	0.63	0.63	0.13	0.19	0.19	0.00	0.07	0.07
Volume/Cap:	0.80	0.20	0.20	0.20	0.80	0.80	0.13	0.01	0.80	0.80	0.13	0.13
Delay/Veh:	53.2	2.6	2.6	53.7	15.3	15.3	38.8	32.5	51.8	250.0	44.2	44.2
User DelAdj:	1.00	1.00	1.00	1.00	1.00	1.00	1.00	1.00	1.00	1.00	1.00	1.00
AdjDel/Veh:	53.2	2.6	2.6	53.7	15.3	15.3	38.8	32.5	51.8	250.0	44.2	44.2
LOS by Move:	D	A	A	D	B	B	D	C	D	F	D	D
HCM2kAvgQ:	10	2	2	0	23	23	1	0	10	1	1	1

Note: Queue reported is the number of cars per lane.

City of Murrieta General Plan
Existing General Plan
AM Peak Hour

Level Of Service Computation Report
2000 HCM Operations Method (Future Volume Alternative)

Intersection #44 Jefferson Ave & Kalmia St

Cycle (sec): 100 Critical Vol./Cap.(X): 0.971
Loss Time (sec): 0 (Y+R=4.0 sec) Average Delay (sec/veh): 43.2
Optimal Cycle: 180 Level Of Service: D

Street Name:	Jefferson Ave						Kalmia St					
Approach:	North Bound			South Bound			East Bound			West Bound		
Movement:	L - T - R			L - T - R			L - T - R			L - T - R		
Control:	Protected			Protected			Protected			Protected		
Rights:	Include			Include			Include			Include		
Min. Green:	0	0	0	0	0	0	0	0	0	0	0	0
Lanes:	2 0	3 0	1	1 0	2 1	0	1 0	2 1	0	1 0	1 1	0
Volume Module:												
Base Vol:	260	903	245	860	1613	151	48	458	333	207	316	469
Growth Adj:	1.00	1.00	1.00	1.00	1.00	1.00	1.00	1.00	1.00	1.00	1.00	1.00
Initial Bse:	260	903	245	860	1613	151	48	458	333	207	316	469
Added Vol:	0	0	0	0	0	0	0	0	0	0	0	0
PasserByVol:	0	0	0	0	0	0	0	0	0	0	0	0
Initial Fut:	260	903	245	860	1613	151	48	458	333	207	316	469
User Adj:	1.00	1.00	1.00	1.00	1.00	1.00	1.00	1.00	1.00	1.00	1.00	1.00
PHF Adj:	1.00	1.00	1.00	1.00	1.00	1.00	1.00	1.00	1.00	1.00	1.00	1.00
PHF Volume:	260	903	245	860	1613	151	48	458	333	207	316	469
Reduct Vol:	0	0	0	0	0	0	0	0	0	0	0	0
Reduced Vol:	260	903	245	860	1613	151	48	458	333	207	316	469
PCE Adj:	1.00	1.00	1.00	1.00	1.00	1.00	1.00	1.00	1.00	1.00	1.00	1.00
MLF Adj:	1.00	1.00	1.00	1.00	1.00	1.00	1.00	1.00	1.00	1.00	1.00	1.00
FinalVolume:	260	903	245	860	1613	151	48	458	333	207	316	469
Saturation Flow Module:												
Sat/Lane:	1900	1900	1900	1900	1900	1900	1900	1900	1900	1900	1900	1900
Adjustment:	0.92	0.91	0.85	0.95	0.90	0.90	0.95	0.85	0.85	0.95	0.86	0.86
Lanes:	2.00	3.00	1.00	1.00	2.74	0.26	1.00	2.00	1.00	1.00	1.00	1.00
Final Sat.:	3502	5187	1615	1805	4681	438	1805	3240	1620	1805	1643	1643
Capacity Analysis Module:												
Vol/Sat:	0.07	0.17	0.15	0.48	0.34	0.34	0.03	0.14	0.21	0.11	0.19	0.29
Crit Moves:		****		****					****	****		
Green/Cycle:	0.12	0.18	0.18	0.49	0.55	0.55	0.03	0.21	0.21	0.12	0.30	0.30
Volume/Cap:	0.62	0.97	0.85	0.97	0.62	0.62	0.95	0.67	0.97	0.97	0.64	0.95
Delay/Veh:	44.9	63.3	59.7	48.0	15.8	15.8	154.5	37.7	63.6	97.0	31.3	53.5
User DelAdj:	1.00	1.00	1.00	1.00	1.00	1.00	1.00	1.00	1.00	1.00	1.00	1.00
AdjDel/Veh:	44.9	63.3	59.7	48.0	15.8	15.8	154.5	37.7	63.6	97.0	31.3	53.5
LOS by Move:	D	E	E	D	B	B	F	D	E	F	C	D
HCM2kAvgQ:	5	15	10	32	14	14	4	8	16	10	10	20

Note: Queue reported is the number of cars per lane.

City of Murrieta General Plan
Existing General Plan
AM Peak Hour

Level Of Service Computation Report
2000 HCM Operations Method (Future Volume Alternative)

Intersection #45 Jefferson Ave & Juniper St

Cycle (sec): 100 Critical Vol./Cap.(X): 0.613
Loss Time (sec): 0 (Y+R=4.0 sec) Average Delay (sec/veh): 15.5
Optimal Cycle: 59 Level Of Service: B

Street Name:	Jefferson Ave						Juniper St					
Approach:	North Bound			South Bound			East Bound			West Bound		
Movement:	L - T - R			L - T - R			L - T - R			L - T - R		
Control:	Protected			Protected			Protected			Protected		
Rights:	Include			Include			Include			Include		
Min. Green:	0	0	0	0	0	0	0	0	0	0	0	0
Lanes:	1 0	2 1	0	1 0	2 1	0	1 0	1 1	0	1 0	1 1	0
Volume Module:												
Base Vol:	257	1291	63	110	1943	82	74	96	112	13	92	36
Growth Adj:	1.00	1.00	1.00	1.00	1.00	1.00	1.00	1.00	1.00	1.00	1.00	1.00
Initial Bse:	257	1291	63	110	1943	82	74	96	112	13	92	36
Added Vol:	0	0	0	0	0	0	0	0	0	0	0	0
PasserByVol:	0	0	0	0	0	0	0	0	0	0	0	0
Initial Fut:	257	1291	63	110	1943	82	74	96	112	13	92	36
User Adj:	1.00	1.00	1.00	1.00	1.00	1.00	1.00	1.00	1.00	1.00	1.00	1.00
PHF Adj:	1.00	1.00	1.00	1.00	1.00	1.00	1.00	1.00	1.00	1.00	1.00	1.00
PHF Volume:	257	1291	63	110	1943	82	74	96	112	13	92	36
Reduct Vol:	0	0	0	0	0	0	0	0	0	0	0	0
Reduced Vol:	257	1291	63	110	1943	82	74	96	112	13	92	36
PCE Adj:	1.00	1.00	1.00	1.00	1.00	1.00	1.00	1.00	1.00	1.00	1.00	1.00
MLF Adj:	1.00	1.00	1.00	1.00	1.00	1.00	1.00	1.00	1.00	1.00	1.00	1.00
FinalVolume:	257	1291	63	110	1943	82	74	96	112	13	92	36
Saturation Flow Module:												
Sat/Lane:	1900	1900	1900	1900	1900	1900	1900	1900	1900	1900	1900	1900
Adjustment:	0.95	0.90	0.90	0.95	0.90	0.90	0.95	0.87	0.87	0.95	0.91	0.91
Lanes:	1.00	2.86	0.14	1.00	2.88	0.12	1.00	1.00	1.00	1.00	1.44	0.56
Final Sat.:	1805	4911	240	1805	4947	209	1805	1659	1659	1805	2486	973
Capacity Analysis Module:												
Vol/Sat:	0.14	0.26	0.26	0.06	0.39	0.39	0.04	0.06	0.07	0.01	0.04	0.04
Crit Moves:	****				****		****				****	
Green/Cycle:	0.23	0.71	0.71	0.16	0.64	0.64	0.07	0.11	0.11	0.01	0.06	0.06
Volume/Cap:	0.61	0.37	0.37	0.37	0.61	0.61	0.61	0.50	0.59	0.59	0.61	0.61
Delay/Veh:	37.1	5.8	5.8	38.0	11.0	11.0	54.4	42.6	44.6	84.2	51.2	51.2
User DelAdj:	1.00	1.00	1.00	1.00	1.00	1.00	1.00	1.00	1.00	1.00	1.00	1.00
AdjDel/Veh:	37.1	5.8	5.8	38.0	11.0	11.0	54.4	42.6	44.6	84.2	51.2	51.2
LOS by Move:	D	A	A	D	B	B	D	D	D	F	D	D
HCM2kAvgQ:	8	6	6	3	14	14	3	4	4	1	3	3

Note: Queue reported is the number of cars per lane.

City of Murrieta General Plan
Existing General Plan
AM Peak Hour

Level Of Service Computation Report
2000 HCM Operations Method (Future Volume Alternative)

Intersection #46 Jefferson Ave & Ivy St/Los Alamos Rd

Cycle (sec): 100 Critical Vol./Cap.(X): 0.642
Loss Time (sec): 0 (Y+R=4.0 sec) Average Delay (sec/veh): 24.1
Optimal Cycle: 64 Level Of Service: C

Street Name:	Jefferson Ave						Ivy St/Los Alamos Rd					
Approach:	North Bound			South Bound			East Bound			West Bound		
Movement:	L	T	R	L	T	R	L	T	R	L	T	R
Control:	Protected			Protected			Protected			Protected		
Rights:	Include			Include			Include			Include		
Min. Green:	0	0	0	0	0	0	0	0	0	0	0	0
Lanes:	2	0 3	0 1	2	0 3	0 1	1	0 1	1 0	1	0 1	1 0
Volume Module:												
Base Vol:	140	1181	64	235	1748	49	59	75	135	289	68	366
Growth Adj:	1.00	1.00	1.00	1.00	1.00	1.00	1.00	1.00	1.00	1.00	1.00	1.00
Initial Bse:	140	1181	64	235	1748	49	59	75	135	289	68	366
Added Vol:	0	0	0	0	0	0	0	0	0	0	0	0
PasserByVol:	0	0	0	0	0	0	0	0	0	0	0	0
Initial Fut:	140	1181	64	235	1748	49	59	75	135	289	68	366
User Adj:	1.00	1.00	1.00	1.00	1.00	1.00	1.00	1.00	1.00	1.00	1.00	1.00
PHF Adj:	1.00	1.00	1.00	1.00	1.00	1.00	1.00	1.00	1.00	1.00	1.00	1.00
PHF Volume:	140	1181	64	235	1748	49	59	75	135	289	68	366
Reduct Vol:	0	0	0	0	0	0	0	0	0	0	0	0
Reduced Vol:	140	1181	64	235	1748	49	59	75	135	289	68	366
PCE Adj:	1.00	1.00	1.00	1.00	1.00	1.00	1.00	1.00	1.00	1.00	1.00	1.00
MLF Adj:	1.00	1.00	1.00	1.00	1.00	1.00	1.00	1.00	1.00	1.00	1.00	1.00
FinalVolume:	140	1181	64	235	1748	49	59	75	135	289	68	366
Saturation Flow Module:												
Sat/Lane:	1900	1900	1900	1900	1900	1900	1900	1900	1900	1900	1900	1900
Adjustment:	0.92	0.91	0.85	0.92	0.91	0.85	0.95	0.86	0.86	0.95	0.83	0.83
Lanes:	2.00	3.00	1.00	2.00	3.00	1.00	1.00	1.00	1.00	1.00	1.00	1.00
Final Sat.:	3502	5187	1615	3502	5187	1615	1805	1632	1632	1805	1578	1578
Capacity Analysis Module:												
Vol/Sat:	0.04	0.23	0.04	0.07	0.34	0.03	0.03	0.05	0.08	0.16	0.04	0.23
Crit Moves:	****				****		****					****
Green/Cycle:	0.06	0.45	0.45	0.13	0.53	0.53	0.05	0.14	0.14	0.27	0.36	0.36
Volume/Cap:	0.64	0.50	0.09	0.50	0.64	0.06	0.64	0.33	0.59	0.59	0.12	0.64
Delay/Veh:	52.1	19.5	15.6	41.1	17.5	11.7	60.9	39.0	42.8	33.4	21.3	28.6
User DelAdj:	1.00	1.00	1.00	1.00	1.00	1.00	1.00	1.00	1.00	1.00	1.00	1.00
AdjDel/Veh:	52.1	19.5	15.6	41.1	17.5	11.7	60.9	39.0	42.8	33.4	21.3	28.6
LOS by Move:	D	B	B	D	B	B	E	D	D	C	C	C
HCM2kAvgQ:	3	9	1	4	14	1	3	2	5	8	1	11

Note: Queue reported is the number of cars per lane.

City of Murrieta General Plan
Existing General Plan
AM Peak Hour

Level Of Service Computation Report
2000 HCM Operations Method (Future Volume Alternative)

Intersection #48 Madison Ave/I-15 SB Ramps & Kalmia St

Cycle (sec): 100 Critical Vol./Cap.(X): 0.533
Loss Time (sec): 0 (Y+R=4.0 sec) Average Delay (sec/veh): 29.0
Optimal Cycle: 49 Level Of Service: C

Street Name:	Madison Ave/I-15 SB Ramps						Kalmia St					
Approach:	North Bound			South Bound			East Bound			West Bound		
Movement:	L	T	R	L	T	R	L	T	R	L	T	R
Control:	Protected			Protected			Protected			Protected		
Rights:	Include			Include			Include			Include		
Min. Green:	0	0	0	0	0	0	0	0	0	0	0	0
Lanes:	2	0 0	0 2	2	0 1	1 0	0	0 3	1 0	2	0 2	1 1
Volume Module:												
Base Vol:	117	0	220	253	48	270	0	1352	212	340	1054	495
Growth Adj:	1.00	1.00	1.00	1.00	1.00	1.00	1.00	1.00	1.00	1.00	1.00	1.00
Initial Bse:	117	0	220	253	48	270	0	1352	212	340	1054	495
Added Vol:	0	0	0	0	0	0	0	0	0	0	0	0
PasserByVol:	0	0	0	0	0	0	0	0	0	0	0	0
Initial Fut:	117	0	220	253	48	270	0	1352	212	340	1054	495
User Adj:	1.00	1.00	1.00	1.00	1.00	1.00	1.00	1.00	1.00	1.00	1.00	1.00
PHF Adj:	1.00	1.00	1.00	1.00	1.00	1.00	1.00	1.00	1.00	1.00	1.00	1.00
PHF Volume:	117	0	220	253	48	270	0	1352	212	340	1054	495
Reduct Vol:	0	0	0	0	0	0	0	0	0	0	0	0
Reduced Vol:	117	0	220	253	48	270	0	1352	212	340	1054	495
PCE Adj:	1.00	1.00	1.00	1.00	1.00	1.00	1.00	1.00	1.00	1.00	1.00	1.00
MLF Adj:	1.00	1.00	1.00	1.00	1.00	1.00	1.00	1.00	1.00	1.00	1.00	1.00
FinalVolume:	117	0	220	253	48	270	0	1352	212	340	1054	495
Saturation Flow Module:												
Sat/Lane:	1900	1900	1900	1900	1900	1900	1900	1900	1900	1900	1900	1900
Adjustment:	0.92	1.00	0.75	0.92	0.83	0.83	1.00	0.89	0.89	0.92	0.87	0.87
Lanes:	2.00	0.00	2.00	2.00	1.00	1.00	0.00	3.46	0.54	2.00	2.72	1.28
Final Sat.:	3502	0	2842	3502	1576	1576	0	5859	919	3502	4480	2104
Capacity Analysis Module:												
Vol/Sat:	0.03	0.00	0.08	0.07	0.03	0.17	0.00	0.23	0.23	0.10	0.24	0.24
Crit Moves:	****					****		****		****		
Green/Cycle:	0.06	0.00	0.06	0.19	0.32	0.32	0.00	0.43	0.43	0.18	0.62	0.62
Volume/Cap:	0.53	0.00	1.23	0.39	0.09	0.53	0.00	0.53	0.53	0.53	0.38	0.38
Delay/Veh:	48.0	0.0	191.0	36.1	23.7	28.7	0.0	21.1	21.1	37.9	9.7	9.7
User DelAdj:	1.00	1.00	1.00	1.00	1.00	1.00	1.00	1.00	1.00	1.00	1.00	1.00
AdjDel/Veh:	48.0	0.0	191.0	36.1	23.7	28.7	0.0	21.1	21.1	37.9	9.7	9.7
LOS by Move:	D	A	F	D	C	C	A	C	C	D	A	A
HCM2kAvgQ:	3	0	9	4	1	8	0	10	10	5	7	7

Note: Queue reported is the number of cars per lane.

City of Murrieta General Plan
Existing General Plan
AM Peak Hour

Level Of Service Computation Report
2000 HCM Operations Method (Future Volume Alternative)

Intersection #50 Hancock Ave & Murrieta Hot Springs Rd

Cycle (sec): 100 Critical Vol./Cap.(X): 0.755
Loss Time (sec): 0 (Y+R=4.0 sec) Average Delay (sec/veh): 17.7
Optimal Cycle: 93 Level Of Service: B

Street Name:	Hancock Ave						Murrieta Hot Springs Rd					
Approach:	North Bound			South Bound			East Bound			West Bound		
Movement:	L -	T -	R	L -	T -	R	L -	T -	R	L -	T -	R
Control:	Protected			Protected			Protected			Protected		
Rights:	Include			Ovl			Include			Include		
Min. Green:	0	0	0	0	0	0	0	0	0	0	0	0
Lanes:	0 0	0 0	0	2 0	0 0	2	2 0	4 0	0	0 0	3 1	0
Volume Module:												
Base Vol:	0	0	0	427	0	673	659	1554	0	0	2501	502
Growth Adj:	1.00	1.00	1.00	1.00	1.00	1.00	1.00	1.00	1.00	1.00	1.00	1.00
Initial Bse:	0	0	0	427	0	673	659	1554	0	0	2501	502
Added Vol:	0	0	0	0	0	0	0	0	0	0	0	0
PasserByVol:	0	0	0	0	0	0	0	0	0	0	0	0
Initial Fut:	0	0	0	427	0	673	659	1554	0	0	2501	502
User Adj:	1.00	1.00	1.00	1.00	1.00	1.00	1.00	1.00	1.00	1.00	1.00	1.00
PHF Adj:	1.00	1.00	1.00	1.00	1.00	1.00	1.00	1.00	1.00	1.00	1.00	1.00
PHF Volume:	0	0	0	427	0	673	659	1554	0	0	2501	502
Reduct Vol:	0	0	0	0	0	0	0	0	0	0	0	0
Reduced Vol:	0	0	0	427	0	673	659	1554	0	0	2501	502
PCE Adj:	1.00	1.00	1.00	1.00	1.00	1.00	1.00	1.00	1.00	1.00	1.00	1.00
MLF Adj:	1.00	1.00	1.00	1.00	1.00	1.00	1.00	1.00	1.00	1.00	1.00	1.00
FinalVolume:	0	0	0	427	0	673	659	1554	0	0	2501	502
Saturation Flow Module:												
Sat/Lane:	1900	1900	1900	1900	1900	1900	1900	1900	1900	1900	1900	1900
Adjustment:	1.00	1.00	1.00	0.92	1.00	0.75	0.92	0.91	1.00	1.00	0.89	0.89
Lanes:	0.00	0.00	0.00	2.00	0.00	2.00	2.00	4.00	0.00	0.00	3.33	0.67
Final Sat.:	0	0	0	3502	0	2842	3502	6916	0	0	5616	1127
Capacity Analysis Module:												
Vol/Sat:	0.00	0.00	0.00	0.12	0.00	0.24	0.19	0.22	0.00	0.00	0.45	0.45
Crit Moves:				****			****				****	
Green/Cycle:	0.00	0.00	0.00	0.16	0.00	0.41	0.25	0.84	0.00	0.00	0.59	0.59
Volume/Cap:	0.00	0.00	0.00	0.76	0.00	0.58	0.76	0.27	0.00	0.00	0.76	0.76
Delay/Veh:	0.0	0.0	0.0	45.8	0.0	23.5	38.5	1.7	0.0	0.0	16.0	16.0
User DelAdj:	1.00	1.00	1.00	1.00	1.00	1.00	1.00	1.00	1.00	1.00	1.00	1.00
AdjDel/Veh:	0.0	0.0	0.0	45.8	0.0	23.5	38.5	1.7	0.0	0.0	16.0	16.0
LOS by Move:	A	A	A	D	A	C	D	A	A	A	B	B
HCM2kAvgQ:	0	0	0	8	0	10	11	3	0	0	20	20

Note: Queue reported is the number of cars per lane.

City of Murrieta General Plan
Existing General Plan
AM Peak Hour

Level Of Service Computation Report
2000 HCM Operations Method (Future Volume Alternative)

Intersection #51 Alta Murrieta Dr & Murrieta Hot Springs Rd

Cycle (sec): 100 Critical Vol./Cap.(X): 0.593
Loss Time (sec): 0 (Y+R=4.0 sec) Average Delay (sec/veh): 23.7
Optimal Cycle: 56 Level Of Service: C

Street Name:	Alta Murrieta Dr						Murrieta Hot Springs Rd					
Approach:	North Bound			South Bound			East Bound			West Bound		
Movement:	L -	T -	R	L -	T -	R	L -	T -	R	L -	T -	R
Control:	Protected			Protected			Protected			Protected		
Rights:	Include			Include			Include			Ovl		
Min. Green:	0	0	0	0	0	0	0	0	0	0	0	0
Lanes:	2 0	1 0	1	2 0	1 1	0	2 0	2 1	0	2 0	4 0	1
Volume Module:												
Base Vol:	224	80	20	68	133	305	248	982	294	137	1863	162
Growth Adj:	1.00	1.00	1.00	1.00	1.00	1.00	1.00	1.00	1.00	1.00	1.00	1.00
Initial Bse:	224	80	20	68	133	305	248	982	294	137	1863	162
Added Vol:	0	0	0	0	0	0	0	0	0	0	0	0
PasserByVol:	0	0	0	0	0	0	0	0	0	0	0	0
Initial Fut:	224	80	20	68	133	305	248	982	294	137	1863	162
User Adj:	1.00	1.00	1.00	1.00	1.00	1.00	1.00	1.00	1.00	1.00	1.00	1.00
PHF Adj:	1.00	1.00	1.00	1.00	1.00	1.00	1.00	1.00	1.00	1.00	1.00	1.00
PHF Volume:	224	80	20	68	133	305	248	982	294	137	1863	162
Reduct Vol:	0	0	0	0	0	0	0	0	0	0	0	0
Reduced Vol:	224	80	20	68	133	305	248	982	294	137	1863	162
PCE Adj:	1.00	1.00	1.00	1.00	1.00	1.00	1.00	1.00	1.00	1.00	1.00	1.00
MLF Adj:	1.00	1.00	1.00	1.00	1.00	1.00	1.00	1.00	1.00	1.00	1.00	1.00
FinalVolume:	224	80	20	68	133	305	248	982	294	137	1863	162
Saturation Flow Module:												
Sat/Lane:	1900	1900	1900	1900	1900	1900	1900	1900	1900	1900	1900	1900
Adjustment:	0.92	1.00	0.85	0.92	0.85	0.85	0.92	0.88	0.88	0.92	0.91	0.85
Lanes:	2.00	1.00	1.00	2.00	1.00	1.00	2.00	2.31	0.69	2.00	4.00	1.00
Final Sat.:	3502	1900	1615	3502	1617	1617	3502	3856	1154	3502	6916	1615
Capacity Analysis Module:												
Vol/Sat:	0.06	0.04	0.01	0.02	0.08	0.19	0.07	0.25	0.25	0.04	0.27	0.10
Crit Moves:	****					****	****				****	
Green/Cycle:	0.11	0.29	0.29	0.13	0.32	0.32	0.12	0.50	0.50	0.08	0.45	0.59
Volume/Cap:	0.59	0.14	0.04	0.14	0.26	0.59	0.59	0.51	0.51	0.51	0.59	0.17
Delay/Veh:	45.0	26.3	25.4	38.3	25.4	29.9	44.0	17.1	17.1	46.1	20.7	9.5
User DelAdj:	1.00	1.00	1.00	1.00	1.00	1.00	1.00	1.00	1.00	1.00	1.00	1.00
AdjDel/Veh:	45.0	26.3	25.4	38.3	25.4	29.9	44.0	17.1	17.1	46.1	20.7	9.5
LOS by Move:	D	C	C	D	C	C	D	B	B	D	C	A
HCM2kAvgQ:	4	2	0	1	3	9	5	10	10	3	12	2

Note: Queue reported is the number of cars per lane.

City of Murrieta General Plan
Existing General Plan
AM Peak Hour

Level Of Service Computation Report
2000 HCM Operations Method (Future Volume Alternative)

Intersection #52 Winchester Road - SR-79 & Murrieta Hot Springs Rd

Cycle (sec): 100 Critical Vol./Cap.(X): 1.304
Loss Time (sec): 0 (Y+R=4.0 sec) Average Delay (sec/veh): 90.6
Optimal Cycle: 180 Level Of Service: F

Street Name:	Winchester Road - SR-79						Murrieta Hot Springs Rd					
Approach:	North Bound			South Bound			East Bound			West Bound		
Movement:	L -	T -	R	L -	T -	R	L -	T -	R	L -	T -	R
Control:	Protected			Protected			Protected			Protected		
Rights:	Ovl			Include			Include			Include		
Min. Green:	0	0	0	0	0	0	0	0	0	0	0	0
Lanes:	2 0	3 0	1	2 0	3 0	1	2 0	3 0	1	2 0	2 1	0
Volume Module:												
Base Vol:	292	1516	160	150	1534	1319	774	273	109	299	856	78
Growth Adj:	1.00	1.00	1.00	1.00	1.00	1.00	1.00	1.00	1.00	1.00	1.00	1.00
Initial Bse:	292	1516	160	150	1534	1319	774	273	109	299	856	78
Added Vol:	0	0	0	0	0	0	0	0	0	0	0	0
PasserByVol:	0	0	0	0	0	0	0	0	0	0	0	0
Initial Fut:	292	1516	160	150	1534	1319	774	273	109	299	856	78
User Adj:	1.00	1.00	1.00	1.00	1.00	1.00	1.00	1.00	1.00	1.00	1.00	1.00
PHF Adj:	1.00	1.00	1.00	1.00	1.00	1.00	1.00	1.00	1.00	1.00	1.00	1.00
PHF Volume:	292	1516	160	150	1534	1319	774	273	109	299	856	78
Reduct Vol:	0	0	0	0	0	0	0	0	0	0	0	0
Reduced Vol:	292	1516	160	150	1534	1319	774	273	109	299	856	78
PCE Adj:	1.00	1.00	1.00	1.00	1.00	1.00	1.00	1.00	1.00	1.00	1.00	1.00
MLF Adj:	1.00	1.00	1.00	1.00	1.00	1.00	1.00	1.00	1.00	1.00	1.00	1.00
FinalVolume:	292	1516	160	150	1534	1319	774	273	109	299	856	78
Saturation Flow Module:												
Sat/Lane:	1900	1900	1900	1900	1900	1900	1900	1900	1900	1900	1900	1900
Adjustment:	0.92	0.91	0.85	0.92	0.91	0.85	0.92	0.91	0.85	0.92	0.90	0.90
Lanes:	2.00	3.00	1.00	2.00	3.00	1.00	2.00	3.00	1.00	2.00	2.75	0.25
Final Sat.:	3502	5187	1615	3502	5187	1615	3502	5187	1615	3502	4692	428
Capacity Analysis Module:												
Vol/Sat:	0.08	0.29	0.10	0.04	0.30	0.82	0.22	0.05	0.07	0.09	0.18	0.18
Crit Moves:	****					****	****				****	
Green/Cycle:	0.06	0.60	0.78	0.09	0.63	0.63	0.17	0.14	0.14	0.17	0.14	0.14
Volume/Cap:	1.30	0.49	0.13	0.49	0.47	1.30	1.30	0.39	0.49	0.49	1.30	1.30
Delay/Veh:	212.0	11.3	2.9	44.6	10.0	162.5	190.1	39.7	41.7	38.0	190	189.7
User DelAdj:	1.00	1.00	1.00	1.00	1.00	1.00	1.00	1.00	1.00	1.00	1.00	1.00
AdjDel/Veh:	212.0	11.3	2.9	44.6	10.0	162.5	190.1	39.7	41.7	38.0	190	189.7
LOS by Move:	F	B	A	D	B	F	F	D	D	D	F	F
HCM2kAvgQ:	11	10	1	3	9	79	26	3	4	5	23	23

Note: Queue reported is the number of cars per lane.

City of Murrieta General Plan
Existing General Plan
AM Peak Hour

Level Of Service Computation Report
2000 HCM Operations Method (Future Volume Alternative)

Intersection #53 Hancock Ave & Los Alamos Rd

Cycle (sec): 100 Critical Vol./Cap.(X): 1.085
Loss Time (sec): 0 (Y+R=4.0 sec) Average Delay (sec/veh): 64.0
Optimal Cycle: 180 Level Of Service: E

Street Name:	Hancock Ave						Los Alamos Rd					
Approach:	North Bound			South Bound			East Bound			West Bound		
Movement:	L -	T -	R	L -	T -	R	L -	T -	R	L -	T -	R
Control:	Protected			Protected			Protected			Protected		
Rights:	Include			Include			Include			Include		
Min. Green:	0	0	0	0	0	0	0	0	0	0	0	0
Lanes:	1 0	1 1	0	2 0	0 1	0	1 0	1 1	0	1 0	1 1	0
Volume Module:												
Base Vol:	49	125	202	693	252	91	72	869	74	902	1617	602
Growth Adj:	1.00	1.00	1.00	1.00	1.00	1.00	1.00	1.00	1.00	1.00	1.00	1.00
Initial Bse:	49	125	202	693	252	91	72	869	74	902	1617	602
Added Vol:	0	0	0	0	0	0	0	0	0	0	0	0
PasserByVol:	0	0	0	0	0	0	0	0	0	0	0	0
Initial Fut:	49	125	202	693	252	91	72	869	74	902	1617	602
User Adj:	1.00	1.00	1.00	1.00	1.00	1.00	1.00	1.00	1.00	1.00	1.00	1.00
PHF Adj:	1.00	1.00	1.00	1.00	1.00	1.00	1.00	1.00	1.00	1.00	1.00	1.00
PHF Volume:	49	125	202	693	252	91	72	869	74	902	1617	602
Reduct Vol:	0	0	0	0	0	0	0	0	0	0	0	0
Reduced Vol:	49	125	202	693	252	91	72	869	74	902	1617	602
PCE Adj:	1.00	1.00	1.00	1.00	1.00	1.00	1.00	1.00	1.00	1.00	1.00	1.00
MLF Adj:	1.00	1.00	1.00	1.00	1.00	1.00	1.00	1.00	1.00	1.00	1.00	1.00
FinalVolume:	49	125	202	693	252	91	72	869	74	902	1617	602
Saturation Flow Module:												
Sat/Lane:	1900	1900	1900	1900	1900	1900	1900	1900	1900	1900	1900	1900
Adjustment:	0.95	0.86	0.86	0.92	0.96	0.96	0.95	0.94	0.94	0.95	0.91	0.91
Lanes:	1.00	1.00	1.00	2.00	0.73	0.27	1.00	1.84	0.16	1.00	1.46	0.54
Final Sat.:	1805	1637	1637	3502	1340	484	1805	3287	280	1805	2523	939
Capacity Analysis Module:												
Vol/Sat:	0.03	0.08	0.12	0.20	0.19	0.19	0.04	0.26	0.26	0.50	0.64	0.64
Crit Moves:			****	****				****		****		
Green/Cycle:	0.04	0.11	0.11	0.18	0.26	0.26	0.04	0.24	0.24	0.46	0.66	0.66
Volume/Cap:	0.73	0.67	1.09	1.09	0.73	0.73	0.97	1.09	1.09	1.09	0.97	0.97
Delay/Veh:	80.1	46.2	120.9	101.9	39.5	39.5	140.6	94.2	94.2	84.0	27.9	27.9
User DelAdj:	1.00	1.00	1.00	1.00	1.00	1.00	1.00	1.00	1.00	1.00	1.00	1.00
AdjDel/Veh:	80.1	46.2	120.9	101.9	39.5	39.5	140.6	94.2	94.2	84.0	27.9	27.9
LOS by Move:	F	D	F	F	D	D	F	F	F	F	C	C
HCM2kAvgQ:	3	5	12	19	11	11	5	24	24	41	40	40

Note: Queue reported is the number of cars per lane.

City of Murrieta General Plan
Existing General Plan
AM Peak Hour

Level Of Service Computation Report
2000 HCM Operations Method (Future Volume Alternative)

Intersection #54 I-215 SB Ramps & Los Alamos Rd

Cycle (sec): 100 Critical Vol./Cap.(X): 1.051
Loss Time (sec): 0 (Y+R=4.0 sec) Average Delay (sec/veh): 58.3
Optimal Cycle: 180 Level Of Service: E

Street Name:	I-215 SB Ramps						Los Alamos Rd					
Approach:	North Bound			South Bound			East Bound			West Bound		
Movement:	L	T	R	L	T	R	L	T	R	L	T	R
Control:	Protected			Protected			Protected			Protected		
Rights:	Include			Include			Include			Include		
Min. Green:	0	0	0	0	0	0	0	0	0	0	0	0
Lanes:	0 0	0 0	0	1 0	1! 0	1	0 0	2 0	1	2 0	2 0	0
Volume Module:												
Base Vol:	0	0	0	409	0	1895	0	1264	457	250	1470	0
Growth Adj:	1.00	1.00	1.00	1.00	1.00	1.00	1.00	1.00	1.00	1.00	1.00	1.00
Initial Bse:	0	0	0	409	0	1895	0	1264	457	250	1470	0
Added Vol:	0	0	0	0	0	0	0	0	0	0	0	0
PasserByVol:	0	0	0	0	0	0	0	0	0	0	0	0
Initial Fut:	0	0	0	409	0	1895	0	1264	457	250	1470	0
User Adj:	1.00	1.00	1.00	1.00	1.00	1.00	1.00	1.00	1.00	1.00	1.00	1.00
PHF Adj:	1.00	1.00	1.00	1.00	1.00	1.00	1.00	1.00	1.00	1.00	1.00	1.00
PHF Volume:	0	0	0	409	0	1895	0	1264	457	250	1470	0
Reduct Vol:	0	0	0	0	0	0	0	0	0	0	0	0
Reduced Vol:	0	0	0	409	0	1895	0	1264	457	250	1470	0
PCE Adj:	1.00	1.00	1.00	1.00	1.00	1.00	1.00	1.00	1.00	1.00	1.00	1.00
MLF Adj:	1.00	1.00	1.00	1.00	1.00	1.00	1.00	1.00	1.00	1.00	1.00	1.00
FinalVolume:	0	0	0	409	0	1895	0	1264	457	250	1470	0
Saturation Flow Module:												
Sat/Lane:	1900	1900	1900	1900	1900	1900	1900	1900	1900	1900	1900	1900
Adjustment:	1.00	1.00	1.00	0.87	1.00	0.87	1.00	0.95	0.85	0.92	0.95	1.00
Lanes:	0.00	0.00	0.00	1.18	0.00	1.82	0.00	2.00	1.00	2.00	2.00	0.00
Final Sat.:	0	0	0	1944	0	3009	0	3610	1615	3502	3610	0
Capacity Analysis Module:												
Vol/Sat:	0.00	0.00	0.00	0.21	0.00	0.63	0.00	0.35	0.28	0.07	0.41	0.00
Crit Moves:						****		****		****		
Green/Cycle:	0.00	0.00	0.00	0.60	0.00	0.60	0.00	0.33	0.33	0.07	0.40	0.00
Volume/Cap:	0.00	0.00	0.00	0.35	0.00	1.05	0.00	1.05	0.85	1.05	1.02	0.00
Delay/Veh:	0.0	0.0	0.0	10.2	0.0	54.4	0.0	73.9	43.2	119.1	57.5	0.0
User DelAdj:	1.00	1.00	1.00	1.00	1.00	1.00	1.00	1.00	1.00	1.00	1.00	1.00
AdjDel/Veh:	0.0	0.0	0.0	10.2	0.0	54.4	0.0	73.9	43.2	119.1	57.5	0.0
LOS by Move:	A	A	A	B	A	D	A	E	D	F	E	A
HCM2kAvgQ:	0	0	0	5	0	44	0	30	16	8	32	0

Note: Queue reported is the number of cars per lane.

City of Murrieta General Plan
Existing General Plan
AM Peak Hour

Level Of Service Computation Report
2000 HCM Operations Method (Future Volume Alternative)

Intersection #55 I-215 NB Ramps & Los Alamos Rd

Cycle (sec): 100 Critical Vol./Cap.(X): 0.820
Loss Time (sec): 0 (Y+R=4.0 sec) Average Delay (sec/veh): 26.1
Optimal Cycle: 127 Level Of Service: C

Street Name:	I-215 NB Ramps						Los Alamos Rd					
Approach:	North Bound			South Bound			East Bound			West Bound		
Movement:	L	T	R	L	T	R	L	T	R	L	T	R
Control:	Protected			Protected			Protected			Protected		
Rights:	Include			Include			Include			Include		
Min. Green:	0	0	0	0	0	0	0	0	0	0	0	0
Lanes:	0 1	0 1	0	0 0	0 0	0	2 0	3 0	0	0 0	2 0	1
Volume Module:												
Base Vol:	457	2	105	0	0	0	601	1028	0	0	1272	70
Growth Adj:	1.00	1.00	1.00	1.00	1.00	1.00	1.00	1.00	1.00	1.00	1.00	1.00
Initial Bse:	457	2	105	0	0	0	601	1028	0	0	1272	70
Added Vol:	0	0	0	0	0	0	0	0	0	0	0	0
PasserByVol:	0	0	0	0	0	0	0	0	0	0	0	0
Initial Fut:	457	2	105	0	0	0	601	1028	0	0	1272	70
User Adj:	1.00	1.00	1.00	1.00	1.00	1.00	1.00	1.00	1.00	1.00	1.00	1.00
PHF Adj:	1.00	1.00	1.00	1.00	1.00	1.00	1.00	1.00	1.00	1.00	1.00	1.00
PHF Volume:	457	2	105	0	0	0	601	1028	0	0	1272	70
Reduct Vol:	0	0	0	0	0	0	0	0	0	0	0	0
Reduced Vol:	457	2	105	0	0	0	601	1028	0	0	1272	70
PCE Adj:	1.00	1.00	1.00	1.00	1.00	1.00	1.00	1.00	1.00	1.00	1.00	1.00
MLF Adj:	1.00	1.00	1.00	1.00	1.00	1.00	1.00	1.00	1.00	1.00	1.00	1.00
FinalVolume:	457	2	105	0	0	0	601	1028	0	0	1272	70
Saturation Flow Module:												
Sat/Lane:	1900	1900	1900	1900	1900	1900	1900	1900	1900	1900	1900	1900
Adjustment:	0.81	0.81	0.81	1.00	1.00	1.00	0.92	0.91	1.00	1.00	0.95	0.85
Lanes:	1.00	0.02	0.98	0.00	0.00	0.00	2.00	3.00	0.00	0.00	2.00	1.00
Final Sat.:	1542	29	1513	0	0	0	3502	5187	0	0	3610	1615
Capacity Analysis Module:												
Vol/Sat:	0.30	0.07	0.07	0.00	0.00	0.00	0.17	0.20	0.00	0.00	0.35	0.04
Crit Moves:	****						****				****	
Green/Cycle:	0.36	0.36	0.36	0.00	0.00	0.00	0.21	0.64	0.00	0.00	0.43	0.43
Volume/Cap:	0.82	0.19	0.19	0.00	0.00	0.00	0.82	0.31	0.00	0.00	0.82	0.10
Delay/Veh:	36.8	22.0	22.0	0.0	0.0	0.0	45.1	8.2	0.0	0.0	28.7	17.1
User DelAdj:	1.00	1.00	1.00	1.00	1.00	1.00	1.00	1.00	1.00	1.00	1.00	1.00
AdjDel/Veh:	36.8	22.0	22.0	0.0	0.0	0.0	45.1	8.2	0.0	0.0	28.7	17.1
LOS by Move:	D	C	C	A	A	A	D	A	A	A	C	B
HCM2kAvgQ:	16	2	2	0	0	0	12	5	0	0	20	1

Note: Queue reported is the number of cars per lane.

City of Murrieta General Plan
Existing General Plan
AM Peak Hour

Level Of Service Computation Report
2000 HCM Operations Method (Future Volume Alternative)

Intersection #56 Whitewood Rd & Los Alamos Rd

Cycle (sec): 100 Critical Vol./Cap.(X): 0.671
Loss Time (sec): 0 (Y+R=4.0 sec) Average Delay (sec/veh): 26.5
Optimal Cycle: 69 Level Of Service: C

Street Name:	Whitewood Rd						Los Alamos Rd					
Approach:	North Bound			South Bound			East Bound			West Bound		
Movement:	L -	T -	R	L -	T -	R	L -	T -	R	L -	T -	R
Control:	Protected			Protected			Protected			Protected		
Rights:	Include			Include			Include			Include		
Min. Green:	0	0	0	0	0	0	0	0	0	0	0	0
Lanes:	1 0	1	1 0	1 0	2	0 1	1 0	2	0 1	1 0	1	1 0
Volume Module:												
Base Vol:	87	237	51	30	449	557	361	215	90	58	256	22
Growth Adj:	1.00	1.00	1.00	1.00	1.00	1.00	1.00	1.00	1.00	1.00	1.00	1.00
Initial Bse:	87	237	51	30	449	557	361	215	90	58	256	22
Added Vol:	0	0	0	0	0	0	0	0	0	0	0	0
PasserByVol:	0	0	0	0	0	0	0	0	0	0	0	0
Initial Fut:	87	237	51	30	449	557	361	215	90	58	256	22
User Adj:	1.00	1.00	1.00	1.00	1.00	1.00	1.00	1.00	1.00	1.00	1.00	1.00
PHF Adj:	1.00	1.00	1.00	1.00	1.00	1.00	1.00	1.00	1.00	1.00	1.00	1.00
PHF Volume:	87	237	51	30	449	557	361	215	90	58	256	22
Reduct Vol:	0	0	0	0	0	0	0	0	0	0	0	0
Reduced Vol:	87	237	51	30	449	557	361	215	90	58	256	22
PCE Adj:	1.00	1.00	1.00	1.00	1.00	1.00	1.00	1.00	1.00	1.00	1.00	1.00
MLF Adj:	1.00	1.00	1.00	1.00	1.00	1.00	1.00	1.00	1.00	1.00	1.00	1.00
FinalVolume:	87	237	51	30	449	557	361	215	90	58	256	22
Saturation Flow Module:												
Sat/Lane:	1900	1900	1900	1900	1900	1900	1900	1900	1900	1900	1900	1900
Adjustment:	0.95	0.92	0.92	0.95	0.95	0.85	0.95	0.95	0.85	0.95	0.94	0.94
Lanes:	1.00	1.65	0.35	1.00	2.00	1.00	1.00	2.00	1.00	1.00	1.84	0.16
Final Sat.:	1805	2891	622	1805	3610	1615	1805	3610	1615	1805	3284	282
Capacity Analysis Module:												
Vol/Sat:	0.05	0.08	0.08	0.02	0.12	0.34	0.20	0.06	0.06	0.03	0.08	0.08
Crit Moves:	****					****	****				****	
Green/Cycle:	0.07	0.49	0.49	0.10	0.51	0.51	0.30	0.27	0.27	0.15	0.12	0.12
Volume/Cap:	0.67	0.17	0.17	0.17	0.24	0.67	0.67	0.22	0.21	0.22	0.67	0.67
Delay/Veh:	58.1	14.4	14.4	41.7	13.6	20.2	34.1	28.5	28.5	38.2	46.6	46.6
User DelAdj:	1.00	1.00	1.00	1.00	1.00	1.00	1.00	1.00	1.00	1.00	1.00	1.00
AdjDel/Veh:	58.1	14.4	14.4	41.7	13.6	20.2	34.1	28.5	28.5	38.2	46.6	46.6
LOS by Move:	E	B	B	D	B	C	C	C	C	D	D	D
HCM2kAvgQ:	4	3	3	1	4	13	11	3	2	2	6	6

Note: Queue reported is the number of cars per lane.

City of Murrieta General Plan
Existing General Plan
AM Peak Hour

Level Of Service Computation Report
2000 HCM Operations Method (Future Volume Alternative)

Intersection #57 Whitewood Rd & Murrieta Hot Springs Rd

Cycle (sec): 100 Critical Vol./Cap.(X): 0.785
Loss Time (sec): 0 (Y+R=4.0 sec) Average Delay (sec/veh): 27.8
Optimal Cycle: 106 Level Of Service: C

Street Name:	Whitewood Rd						Murrieta Hot Springs Rd					
Approach:	North Bound			South Bound			East Bound			West Bound		
Movement:	L -	T -	R	L -	T -	R	L -	T -	R	L -	T -	R
Control:	Protected			Protected			Protected			Protected		
Rights:	Include			Include			Include			Include		
Min. Green:	0	0	0	0	0	0	0	0	0	0	0	0
Lanes:	1 0	1	1 0	1 0	1	1 0	1 0	2	1 0	1 0	2	1 0
Volume Module:												
Base Vol:	57	203	255	250	541	107	25	996	138	486	2064	120
Growth Adj:	1.00	1.00	1.00	1.00	1.00	1.00	1.00	1.00	1.00	1.00	1.00	1.00
Initial Bse:	57	203	255	250	541	107	25	996	138	486	2064	120
Added Vol:	0	0	0	0	0	0	0	0	0	0	0	0
PasserByVol:	0	0	0	0	0	0	0	0	0	0	0	0
Initial Fut:	57	203	255	250	541	107	25	996	138	486	2064	120
User Adj:	1.00	1.00	1.00	1.00	1.00	1.00	1.00	1.00	1.00	1.00	1.00	1.00
PHF Adj:	1.00	1.00	1.00	1.00	1.00	1.00	1.00	1.00	1.00	1.00	1.00	1.00
PHF Volume:	57	203	255	250	541	107	25	996	138	486	2064	120
Reduct Vol:	0	0	0	0	0	0	0	0	0	0	0	0
Reduced Vol:	57	203	255	250	541	107	25	996	138	486	2064	120
PCE Adj:	1.00	1.00	1.00	1.00	1.00	1.00	1.00	1.00	1.00	1.00	1.00	1.00
MLF Adj:	1.00	1.00	1.00	1.00	1.00	1.00	1.00	1.00	1.00	1.00	1.00	1.00
FinalVolume:	57	203	255	250	541	107	25	996	138	486	2064	120
Saturation Flow Module:												
Sat/Lane:	1900	1900	1900	1900	1900	1900	1900	1900	1900	1900	1900	1900
Adjustment:	0.95	0.87	0.87	0.95	0.93	0.93	0.95	0.89	0.89	0.95	0.90	0.90
Lanes:	1.00	1.00	1.00	1.00	1.67	0.33	1.00	2.63	0.37	1.00	2.84	0.16
Final Sat.:	1805	1653	1653	1805	2939	581	1805	4474	620	1805	4863	283
Capacity Analysis Module:												
Vol/Sat:	0.03	0.12	0.15	0.14	0.18	0.18	0.01	0.22	0.22	0.27	0.42	0.42
Crit Moves:			****	****				****		****		
Green/Cycle:	0.05	0.20	0.20	0.18	0.32	0.32	0.02	0.28	0.28	0.34	0.61	0.61
Volume/Cap:	0.58	0.62	0.78	0.78	0.58	0.58	0.70	0.78	0.78	0.78	0.70	0.70
Delay/Veh:	54.4	38.5	45.1	51.4	29.2	29.2	95.5	35.9	35.9	36.1	14.1	14.1
User DelAdj:	1.00	1.00	1.00	1.00	1.00	1.00	1.00	1.00	1.00	1.00	1.00	1.00
AdjDel/Veh:	54.4	38.5	45.1	51.4	29.2	29.2	95.5	35.9	35.9	36.1	14.1	14.1
LOS by Move:	D	D	D	D	C	C	F	D	D	D	B	B
HCM2kAvgQ:	3	7	10	9	9	9	2	14	14	15	17	17

Note: Queue reported is the number of cars per lane.

City of Murrieta General Plan
Existing General Plan
AM Peak Hour

Level Of Service Computation Report
2000 HCM Operations Method (Future Volume Alternative)

Intersection #59 Nutmeg St & Clinton Keith Rd

Cycle (sec): 100 Critical Vol./Cap.(X): 1.059
Loss Time (sec): 0 (Y+R=4.0 sec) Average Delay (sec/veh): 60.8
Optimal Cycle: 180 Level Of Service: E

Street Name:	Nutmeg St						Clinton Keith Rd					
Approach:	North Bound			South Bound			East Bound			West Bound		
Movement:	L -	T -	R	L -	T -	R	L -	T -	R	L -	T -	R
Control:	Protected			Protected			Protected			Protected		
Rights:	Include			Include			Include			Include		
Min. Green:	0	0	0	0	0	0	0	0	0	0	0	0
Lanes:	1 0	1	1 0	1 0	1	1 0	1 0	2	1 0	1 0	2	1 0
Volume Module:												
Base Vol:	75	45	460	387	53	71	46	1690	94	366	1366	159
Growth Adj:	1.00	1.00	1.00	1.00	1.00	1.00	1.00	1.00	1.00	1.00	1.00	1.00
Initial Bse:	75	45	460	387	53	71	46	1690	94	366	1366	159
Added Vol:	0	0	0	0	0	0	0	0	0	0	0	0
PasserByVol:	0	0	0	0	0	0	0	0	0	0	0	0
Initial Fut:	75	45	460	387	53	71	46	1690	94	366	1366	159
User Adj:	1.00	1.00	1.00	1.00	1.00	1.00	1.00	1.00	1.00	1.00	1.00	1.00
PHF Adj:	1.00	1.00	1.00	1.00	1.00	1.00	1.00	1.00	1.00	1.00	1.00	1.00
PHF Volume:	75	45	460	387	53	71	46	1690	94	366	1366	159
Reduct Vol:	0	0	0	0	0	0	0	0	0	0	0	0
Reduced Vol:	75	45	460	387	53	71	46	1690	94	366	1366	159
PCE Adj:	1.00	1.00	1.00	1.00	1.00	1.00	1.00	1.00	1.00	1.00	1.00	1.00
MLF Adj:	1.00	1.00	1.00	1.00	1.00	1.00	1.00	1.00	1.00	1.00	1.00	1.00
FinalVolume:	75	45	460	387	53	71	46	1690	94	366	1366	159
Saturation Flow Module:												
Sat/Lane:	1900	1900	1900	1900	1900	1900	1900	1900	1900	1900	1900	1900
Adjustment:	0.95	0.82	0.82	0.95	0.87	0.87	0.95	0.90	0.90	0.95	0.90	0.90
Lanes:	1.00	1.00	1.00	1.00	1.00	1.00	1.00	2.84	0.16	1.00	2.69	0.31
Final Sat.:	1805	1558	1558	1805	1650	1650	1805	4874	271	1805	4572	532
Capacity Analysis Module:												
Vol/Sat:	0.04	0.03	0.30	0.21	0.03	0.04	0.03	0.35	0.35	0.20	0.30	0.30
Crit Moves:			****	****				****		****		
Green/Cycle:	0.24	0.28	0.28	0.20	0.24	0.24	0.04	0.33	0.33	0.19	0.48	0.48
Volume/Cap:	0.18	0.10	1.06	1.06	0.13	0.18	0.63	1.06	1.06	1.06	0.63	0.63
Delay/Veh:	30.6	26.8	93.8	103.5	29.5	29.9	62.9	73.2	73.2	105.3	19.9	19.9
User DelAdj:	1.00	1.00	1.00	1.00	1.00	1.00	1.00	1.00	1.00	1.00	1.00	1.00
AdjDel/Veh:	30.6	26.8	93.8	103.5	29.5	29.9	62.9	73.2	73.2	105.3	19.9	19.9
LOS by Move:	C	C	F	F	C	C	E	E	E	F	B	B
HCM2kAvgQ:	2	1	23	19	1	2	2	30	30	18	13	13

Note: Queue reported is the number of cars per lane.

City of Murrieta General Plan
Existing General Plan
AM Peak Hour

Level Of Service Computation Report
2000 HCM Operations Method (Future Volume Alternative)

Intersection #60 Murrieta Oaks Ave-Mitchell Rd & Clinton Keith Rd

Cycle (sec): 100 Critical Vol./Cap.(X): 0.795
Loss Time (sec): 0 (Y+R=4.0 sec) Average Delay (sec/veh): 14.6
Optimal Cycle: 111 Level Of Service: B

Street Name:	Murrieta Oaks Ave-Mitchell Rd						Clinton Keith Rd					
Approach:	North Bound			South Bound			East Bound			West Bound		
Movement:	L -	T -	R	L -	T -	R	L -	T -	R	L -	T -	R
Control:	Protected			Protected			Protected			Protected		
Rights:	Include			Include			Include			Include		
Min. Green:	0	0	0	0	0	0	0	0	0	0	0	0
Lanes:	1 0	0	1 0	1 0	1	0 1	1 0	2	1 0	1 0	2	1 0
Volume Module:												
Base Vol:	121	147	143	8	32	58	65	2553	302	120	2084	206
Growth Adj:	1.00	1.00	1.00	1.00	1.00	1.00	1.00	1.00	1.00	1.00	1.00	1.00
Initial Bse:	121	147	143	8	32	58	65	2553	302	120	2084	206
Added Vol:	0	0	0	0	0	0	0	0	0	0	0	0
PasserByVol:	0	0	0	0	0	0	0	0	0	0	0	0
Initial Fut:	121	147	143	8	32	58	65	2553	302	120	2084	206
User Adj:	1.00	1.00	1.00	1.00	1.00	1.00	1.00	1.00	1.00	1.00	1.00	1.00
PHF Adj:	1.00	1.00	1.00	1.00	1.00	1.00	1.00	1.00	1.00	1.00	1.00	1.00
PHF Volume:	121	147	143	8	32	58	65	2553	302	120	2084	206
Reduct Vol:	0	0	0	0	0	0	0	0	0	0	0	0
Reduced Vol:	121	147	143	8	32	58	65	2553	302	120	2084	206
PCE Adj:	1.00	1.00	1.00	1.00	1.00	1.00	1.00	1.00	1.00	1.00	1.00	1.00
MLF Adj:	1.00	1.00	1.00	1.00	1.00	1.00	1.00	1.00	1.00	1.00	1.00	1.00
FinalVolume:	121	147	143	8	32	58	65	2553	302	120	2084	206
Saturation Flow Module:												
Sat/Lane:	1900	1900	1900	1900	1900	1900	1900	1900	1900	1900	1900	1900
Adjustment:	0.95	0.93	0.93	0.95	1.00	0.85	0.95	0.90	0.90	0.95	0.90	0.90
Lanes:	1.00	0.51	0.49	1.00	1.00	1.00	1.00	2.68	0.32	1.00	2.73	0.27
Final Sat.:	1805	892	868	1805	1900	1615	1805	4564	540	1805	4659	461
Capacity Analysis Module:												
Vol/Sat:	0.07	0.16	0.16	0.00	0.02	0.04	0.04	0.56	0.56	0.07	0.45	0.45
Crit Moves:		****		****				****		****		
Green/Cycle:	0.14	0.21	0.21	0.01	0.07	0.07	0.06	0.70	0.70	0.08	0.73	0.73
Volume/Cap:	0.48	0.80	0.80	0.80	0.23	0.48	0.61	0.80	0.80	0.80	0.61	0.61
Delay/Veh:	41.2	49.1	49.1	216.2	44.4	47.5	56.2	11.3	11.3	69.6	7.0	7.0
User DelAdj:	1.00	1.00	1.00	1.00	1.00	1.00	1.00	1.00	1.00	1.00	1.00	1.00
AdjDel/Veh:	41.2	49.1	49.1	216.2	44.4	47.5	56.2	11.3	11.3	69.6	7.0	7.0
LOS by Move:	D	D	D	F	D	D	E	B	B	E	A	A
HCM2kAvgQ:	4	11	11	1	1	2	3	23	23	6	13	13

Note: Queue reported is the number of cars per lane.

City of Murrieta General Plan
Existing General Plan
AM Peak Hour

Level Of Service Computation Report
2000 HCM Operations Method (Future Volume Alternative)

Intersection #61 I-215 SB Ramps & Scott Rd

Cycle (sec): 100 Critical Vol./Cap.(X): 0.223
Loss Time (sec): 0 (Y+R=4.0 sec) Average Delay (sec/veh): 7.3
Optimal Cycle: 29 Level Of Service: A

Street Name:	I-215 SB Ramps						Scott Rd					
Approach:	North Bound			South Bound			East Bound			West Bound		
Movement:	L	T	R	L	T	R	L	T	R	L	T	R
Control:	Protected			Protected			Protected			Protected		
Rights:	Include			Include			Ignore			Ignore		
Min. Green:	0	0	0	0	0	0	0	0	0	0	0	0
Lanes:	0	0	0	0	0	2	0	0	4	0	1	0
Volume Module:												
Base Vol:	0	0	0	170	0	148	0	858	475	0	906	293
Growth Adj:	1.00	1.00	1.00	1.00	1.00	1.00	1.00	1.00	1.00	1.00	1.00	1.00
Initial Bse:	0	0	0	170	0	148	0	858	475	0	906	293
Added Vol:	0	0	0	0	0	0	0	0	0	0	0	0
PasserByVol:	0	0	0	0	0	0	0	0	0	0	0	0
Initial Fut:	0	0	0	170	0	148	0	858	475	0	906	293
User Adj:	1.00	1.00	1.00	1.00	1.00	1.00	1.00	1.00	0.00	1.00	1.00	0.00
PHF Adj:	1.00	1.00	1.00	1.00	1.00	1.00	1.00	1.00	0.00	1.00	1.00	0.00
PHF Volume:	0	0	0	170	0	148	0	858	0	0	906	0
Reduct Vol:	0	0	0	0	0	0	0	0	0	0	0	0
Reduced Vol:	0	0	0	170	0	148	0	858	0	0	906	0
PCE Adj:	1.00	1.00	1.00	1.00	1.00	1.00	1.00	1.00	0.00	1.00	1.00	0.00
MLF Adj:	1.00	1.00	1.00	1.00	1.00	1.00	1.00	1.00	0.00	1.00	1.00	0.00
FinalVolume:	0	0	0	170	0	148	0	858	0	0	906	0
Saturation Flow Module:												
Sat/Lane:	1900	1900	1900	1900	1900	1900	1900	1900	1900	1900	1900	1900
Adjustment:	1.00	1.00	1.00	0.92	1.00	0.75	1.00	0.91	1.00	1.00	0.91	0.88
Lanes:	0.00	0.00	0.00	2.00	0.00	2.00	0.00	4.00	1.00	0.00	3.00	2.00
Final Sat.:	0	0	0	3502	0	2842	0	6916	1900	0	5187	3344
Capacity Analysis Module:												
Vol/Sat:	0.00	0.00	0.00	0.05	0.00	0.05	0.00	0.12	0.00	0.00	0.17	0.00
Crit Moves:				****			****				****	
Green/Cycle:	0.00	0.00	0.00	0.22	0.00	0.22	0.00	0.78	0.00	0.00	0.78	0.00
Volume/Cap:	0.00	0.00	0.00	0.22	0.00	0.24	0.00	0.16	0.00	0.00	0.22	0.00
Delay/Veh:	0.0	0.0	0.0	32.3	0.0	32.5	0.0	2.7	0.0	0.0	2.9	0.0
User DelAdj:	1.00	1.00	1.00	1.00	1.00	1.00	1.00	1.00	1.00	1.00	1.00	1.00
AdjDel/Veh:	0.0	0.0	0.0	32.3	0.0	32.5	0.0	2.7	0.0	0.0	2.9	0.0
LOS by Move:	A	A	A	C	A	C	A	A	A	A	A	A
HCM2kAvgQ:	0	0	0	2	0	2	0	2	0	0	3	0

Note: Queue reported is the number of cars per lane.

City of Murrieta General Plan
Existing General Plan
AM Peak Hour

Level Of Service Computation Report
2000 HCM Operations Method (Future Volume Alternative)

Intersection #62 I-215 NB Ramps & Scott Rd

Cycle (sec): 100 Critical Vol./Cap.(X): 0.371
Loss Time (sec): 0 (Y+R=4.0 sec) Average Delay (sec/veh): 15.9
Optimal Cycle: 36 Level Of Service: B

Street Name:	I-215 NB Ramps						Scott Rd					
Approach:	North Bound			South Bound			East Bound			West Bound		
Movement:	L	T	R	L	T	R	L	T	R	L	T	R
Control:	Protected			Protected			Protected			Protected		
Rights:	Include			Include			Include			Ovl		
Min. Green:	0	0	0	0	0	0	0	0	0	0	0	0
Lanes:	0	0	0	1	2	0	0	0	0	2	2	0
Volume Module:												
Base Vol:	0	17	566	0	0	297	147	929	0	0	1002	336
Growth Adj:	1.00	1.00	1.00	1.00	1.00	1.00	1.00	1.00	1.00	1.00	1.00	1.00
Initial Bse:	0	17	566	0	0	297	147	929	0	0	1002	336
Added Vol:	0	0	0	0	0	0	0	0	0	0	0	0
PasserByVol:	0	0	0	0	0	0	0	0	0	0	0	0
Initial Fut:	0	17	566	0	0	297	147	929	0	0	1002	336
User Adj:	1.00	1.00	1.00	1.00	1.00	1.00	1.00	1.00	1.00	1.00	1.00	1.00
PHF Adj:	1.00	1.00	1.00	1.00	1.00	1.00	1.00	1.00	1.00	1.00	1.00	1.00
PHF Volume:	0	17	566	0	0	297	147	929	0	0	1002	336
Reduct Vol:	0	0	0	0	0	0	0	0	0	0	0	0
Reduced Vol:	0	17	566	0	0	297	147	929	0	0	1002	336
PCE Adj:	1.00	1.00	1.00	1.00	1.00	1.00	1.00	1.00	1.00	1.00	1.00	1.00
MLF Adj:	1.00	1.00	1.00	1.00	1.00	1.00	1.00	1.00	1.00	1.00	1.00	1.00
FinalVolume:	0	17	566	0	0	297	147	929	0	0	1002	336
Saturation Flow Module:												
Sat/Lane:	1900	1900	1900	1900	1900	1900	1900	1900	1900	1900	1900	1900
Adjustment:	1.00	0.85	0.75	1.00	1.00	0.75	0.92	0.91	1.00	1.00	0.91	0.75
Lanes:	0.00	0.08	2.92	0.00	0.00	2.00	2.00	4.00	0.00	0.00	3.00	2.00
Final Sat.:	0	125	4173	0	0	2842	3502	6916	0	0	5187	2842
Capacity Analysis Module:												
Vol/Sat:	0.00	0.14	0.14	0.00	0.00	0.10	0.04	0.13	0.00	0.00	0.19	0.12
Crit Moves:		****		****			****				****	
Green/Cycle:	0.00	0.37	0.37	0.00	0.00	0.37	0.11	0.63	0.00	0.00	0.52	0.52
Volume/Cap:	0.00	0.37	0.37	0.00	0.00	0.29	0.37	0.21	0.00	0.00	0.37	0.23
Delay/Veh:	0.0	23.4	23.4	0.0	0.0	22.6	41.6	7.8	0.0	0.0	14.3	13.1
User DelAdj:	1.00	1.00	1.00	1.00	1.00	1.00	1.00	1.00	1.00	1.00	1.00	1.00
AdjDel/Veh:	0.0	23.4	23.4	0.0	0.0	22.6	41.6	7.8	0.0	0.0	14.3	13.1
LOS by Move:	A	C	C	A	A	C	D	A	A	A	B	B
HCM2kAvgQ:	0	5	5	0	0	4	3	3	0	0	7	3

Note: Queue reported is the number of cars per lane.

City of Murrieta General Plan
Existing General Plan
AM Peak Hour

Level Of Service Computation Report
2000 HCM Operations Method (Future Volume Alternative)

Intersection #102 Leon Road & Scott Road

Cycle (sec): 100 Critical Vol./Cap.(X): 0.707
Loss Time (sec): 0 (Y+R=4.0 sec) Average Delay (sec/veh): 28.5
Optimal Cycle: 78 Level Of Service: C

Street Name:	Leon Road						Scott Road					
Approach:	North Bound			South Bound			East Bound			West Bound		
Movement:	L - T - R			L - T - R			L - T - R			L - T - R		
Control:	Protected			Protected			Protected			Protected		
Rights:	Include			Include			Include			Include		
Min. Green:	0	0	0	0	0	0	0	0	0	0	0	0
Lanes:	1 0	1 1	0	1 0	1 1	0	1 0	2 1	0	1 0	2 1	0
Volume Module:												
Base Vol:	97	182	2	96	285	526	401	448	344	8	376	161
Growth Adj:	1.00	1.00	1.00	1.00	1.00	1.00	1.00	1.00	1.00	1.00	1.00	1.00
Initial Bse:	97	182	2	96	285	526	401	448	344	8	376	161
Added Vol:	0	0	0	0	0	0	0	0	0	0	0	0
PasserByVol:	0	0	0	0	0	0	0	0	0	0	0	0
Initial Fut:	97	182	2	96	285	526	401	448	344	8	376	161
User Adj:	1.00	1.00	1.00	1.00	1.00	1.00	1.00	1.00	1.00	1.00	1.00	1.00
PHF Adj:	1.00	1.00	1.00	1.00	1.00	1.00	1.00	1.00	1.00	1.00	1.00	1.00
PHF Volume:	97	182	2	96	285	526	401	448	344	8	376	161
Reduct Vol:	0	0	0	0	0	0	0	0	0	0	0	0
Reduced Vol:	97	182	2	96	285	526	401	448	344	8	376	161
PCE Adj:	1.00	1.00	1.00	1.00	1.00	1.00	1.00	1.00	1.00	1.00	1.00	1.00
MLF Adj:	1.00	1.00	1.00	1.00	1.00	1.00	1.00	1.00	1.00	1.00	1.00	1.00
FinalVolume:	97	182	2	96	285	526	401	448	344	8	376	161
Saturation Flow Module:												
Sat/Lane:	1900	1900	1900	1900	1900	1900	1900	1900	1900	1900	1900	1900
Adjustment:	0.95	0.95	0.95	0.95	0.86	0.86	0.95	0.85	0.85	0.95	0.87	0.87
Lanes:	1.00	1.98	0.02	1.00	1.00	1.00	1.00	2.00	1.00	1.00	2.10	0.90
Final Sat.:	1805	3564	39	1805	1630	1630	1805	3233	1617	1805	3468	1485
Capacity Analysis Module:												
Vol/Sat:	0.05	0.05	0.05	0.05	0.17	0.32	0.22	0.14	0.21	0.00	0.11	0.11
Crit Moves:	****					****	****				****	
Green/Cycle:	0.08	0.26	0.26	0.27	0.46	0.46	0.31	0.46	0.46	0.01	0.15	0.15
Volume/Cap:	0.71	0.20	0.20	0.20	0.38	0.71	0.71	0.30	0.46	0.46	0.71	0.71
Delay/Veh:	60.7	28.9	28.9	28.2	18.0	23.9	34.3	17.1	18.9	67.8	43.3	43.3
User DelAdj:	1.00	1.00	1.00	1.00	1.00	1.00	1.00	1.00	1.00	1.00	1.00	1.00
AdjDel/Veh:	60.7	28.9	28.9	28.2	18.0	23.9	34.3	17.1	18.9	67.8	43.3	43.3
LOS by Move:	E	C	C	C	B	C	C	B	B	E	D	D
HCM2kAvgQ:	4	2	2	2	6	15	12	5	8	1	7	7

Note: Queue reported is the number of cars per lane.

City of Murrieta General Plan
Existing General Plan
AM Peak Hour

Level Of Service Computation Report
2000 HCM Operations Method (Future Volume Alternative)

Intersection #104 Antelope Road & Keller Road

Cycle (sec): 100 Critical Vol./Cap.(X): 1.120
Loss Time (sec): 0 (Y+R=4.0 sec) Average Delay (sec/veh): 66.4
Optimal Cycle: 180 Level Of Service: E

Street Name:	Antelope Road						Keller Road					
Approach:	North Bound			South Bound			East Bound			West Bound		
Movement:	L - T - R			L - T - R			L - T - R			L - T - R		
Control:	Protected			Protected			Protected			Protected		
Rights:	Include			Include			Include			Include		
Min. Green:	0	0	0	0	0	0	0	0	0	0	0	0
Lanes:	2 0	2 0	1	1 0	2 0	1	2 0	3 0	1	1 0	3 0	1
Volume Module:												
Base Vol:	55	39	269	159	297	298	400	711	831	633	511	33
Growth Adj:	1.00	1.00	1.00	1.00	1.00	1.00	1.00	1.00	1.00	1.00	1.00	1.00
Initial Bse:	55	39	269	159	297	298	400	711	831	633	511	33
Added Vol:	0	0	0	0	0	0	0	0	0	0	0	0
PasserByVol:	0	0	0	0	0	0	0	0	0	0	0	0
Initial Fut:	55	39	269	159	297	298	400	711	831	633	511	33
User Adj:	1.00	1.00	1.00	1.00	1.00	1.00	1.00	1.00	1.00	1.00	1.00	1.00
PHF Adj:	1.00	1.00	1.00	1.00	1.00	1.00	1.00	1.00	1.00	1.00	1.00	1.00
PHF Volume:	55	39	269	159	297	298	400	711	831	633	511	33
Reduct Vol:	0	0	0	0	0	0	0	0	0	0	0	0
Reduced Vol:	55	39	269	159	297	298	400	711	831	633	511	33
PCE Adj:	1.00	1.00	1.00	1.00	1.00	1.00	1.00	1.00	1.00	1.00	1.00	1.00
MLF Adj:	1.00	1.00	1.00	1.00	1.00	1.00	1.00	1.00	1.00	1.00	1.00	1.00
FinalVolume:	55	39	269	159	297	298	400	711	831	633	511	33
Saturation Flow Module:												
Sat/Lane:	1900	1900	1900	1900	1900	1900	1900	1900	1900	1900	1900	1900
Adjustment:	0.92	0.95	0.85	0.95	0.95	0.85	0.92	0.91	0.85	0.95	0.91	0.85
Lanes:	2.00	2.00	1.00	1.00	2.00	1.00	2.00	3.00	1.00	1.00	3.00	1.00
Final Sat.:	3502	3610	1615	1805	3610	1615	3502	5187	1615	1805	5187	1615
Capacity Analysis Module:												
Vol/Sat:	0.02	0.01	0.17	0.09	0.08	0.18	0.11	0.14	0.51	0.35	0.10	0.02
Crit Moves:			****	****					****	****		
Green/Cycle:	0.02	0.15	0.15	0.08	0.21	0.21	0.41	0.46	0.46	0.31	0.36	0.36
Volume/Cap:	0.88	0.07	1.12	1.12	0.39	0.88	0.28	0.30	1.12	1.12	0.28	0.06
Delay/Veh:	121.9	36.7	136.7	157.4	34.4	60.7	19.4	17.0	98.2	109.6	23.0	21.1
User DelAdj:	1.00	1.00	1.00	1.00	1.00	1.00	1.00	1.00	1.00	1.00	1.00	1.00
AdjDel/Veh:	121.9	36.7	136.7	157.4	34.4	60.7	19.4	17.0	98.2	109.6	23.0	21.1
LOS by Move:	F	D	F	F	C	E	B	B	F	F	C	C
HCM2kAvgQ:	2	1	15	10	4	12	4	5	40	32	4	1

Note: Queue reported is the number of cars per lane.

City of Murrieta General Plan
Existing General Plan
AM Peak Hour

Level Of Service Computation Report
2000 HCM Operations Method (Future Volume Alternative)

Intersection #105 Menifee Road - Meadowlark Road & Keller Road

Cycle (sec): 100 Critical Vol./Cap.(X): 0.790
Loss Time (sec): 0 (Y+R=4.0 sec) Average Delay (sec/veh): 30.6
Optimal Cycle: 109 Level Of Service: C

Street Name:	Menifee Road - Meadowlark Road						Keller Road					
Approach:	North Bound			South Bound			East Bound			West Bound		
Movement:	L - T - R			L - T - R			L - T - R			L - T - R		
Control:	Protected			Protected			Protected			Protected		
Rights:	Include			Include			Include			Include		
Min. Green:	0	0	0	0	0	0	0	0	0	0	0	0
Lanes:	1 0	1	1 0	1 0	1	1 0	2 0	1	1 0	1 0	1	1 0
Volume Module:												
Base Vol:	21	283	247	136	919	621	567	180	352	196	339	150
Growth Adj:	1.00	1.00	1.00	1.00	1.00	1.00	1.00	1.00	1.00	1.00	1.00	1.00
Initial Bse:	21	283	247	136	919	621	567	180	352	196	339	150
Added Vol:	0	0	0	0	0	0	0	0	0	0	0	0
PasserByVol:	0	0	0	0	0	0	0	0	0	0	0	0
Initial Fut:	21	283	247	136	919	621	567	180	352	196	339	150
User Adj:	1.00	1.00	1.00	1.00	1.00	1.00	1.00	1.00	1.00	1.00	1.00	1.00
PHF Adj:	1.00	1.00	1.00	1.00	1.00	1.00	1.00	1.00	1.00	1.00	1.00	1.00
PHF Volume:	21	283	247	136	919	621	567	180	352	196	339	150
Reduct Vol:	0	0	0	0	0	0	0	0	0	0	0	0
Reduced Vol:	21	283	247	136	919	621	567	180	352	196	339	150
PCE Adj:	1.00	1.00	1.00	1.00	1.00	1.00	1.00	1.00	1.00	1.00	1.00	1.00
MLF Adj:	1.00	1.00	1.00	1.00	1.00	1.00	1.00	1.00	1.00	1.00	1.00	1.00
FinalVolume:	21	283	247	136	919	621	567	180	352	196	339	150
Saturation Flow Module:												
Sat/Lane:	1900	1900	1900	1900	1900	1900	1900	1900	1900	1900	1900	1900
Adjustment:	0.95	0.88	0.88	0.95	0.89	0.89	0.92	0.86	0.86	0.95	0.91	0.91
Lanes:	1.00	1.07	0.93	1.00	1.19	0.81	2.00	1.00	1.00	1.00	1.39	0.61
Final Sat.:	1805	1793	1565	1805	2025	1368	3502	1626	1626	1805	2388	1056
Capacity Analysis Module:												
Vol/Sat:	0.01	0.16	0.16	0.08	0.45	0.45	0.16	0.11	0.22	0.11	0.14	0.14
Crit Moves:	****				****				****	****		
Green/Cycle:	0.01	0.40	0.40	0.19	0.57	0.57	0.22	0.27	0.27	0.14	0.19	0.19
Volume/Cap:	0.79	0.40	0.40	0.40	0.79	0.79	0.74	0.40	0.79	0.79	0.74	0.74
Delay/Veh:	137.2	21.7	21.7	36.2	18.9	18.9	40.2	29.9	40.0	57.4	42.5	42.5
User DelAdj:	1.00	1.00	1.00	1.00	1.00	1.00	1.00	1.00	1.00	1.00	1.00	1.00
AdjDel/Veh:	137.2	21.7	21.7	36.2	18.9	18.9	40.2	29.9	40.0	57.4	42.5	42.5
LOS by Move:	F	C	C	D	B	B	D	C	D	E	D	D
HCM2kAvgQ:	2	6	6	4	21	21	10	5	13	8	9	9

Note: Queue reported is the number of cars per lane.

City of Murrieta General Plan
Existing General Plan
AM Peak Hour

Level Of Service Computation Report
2000 HCM Operations Method (Future Volume Alternative)

Intersection #107 Leon Road & Keller Road

Cycle (sec): 100 Critical Vol./Cap.(X): 0.307
Loss Time (sec): 0 (Y+R=4.0 sec) Average Delay (sec/veh): 16.6
Optimal Cycle: 27 Level Of Service: B

Street Name:	Leon Road						Keller Road					
Approach:	North Bound			South Bound			East Bound			West Bound		
Movement:	L - T - R			L - T - R			L - T - R			L - T - R		
Control:	Protected			Permitted			Protected			Permitted		
Rights:	Include			Include			Include			Include		
Min. Green:	0	0	0	0	0	0	0	0	0	0	0	0
Lanes:	1 0	1	1 0	1 0	1	1 0	1 0	1	1 0	1 0	1	1 0
Volume Module:												
Base Vol:	125	309	11	2	570	122	4	66	182	3	33	2
Growth Adj:	1.00	1.00	1.00	1.00	1.00	1.00	1.00	1.00	1.00	1.00	1.00	1.00
Initial Bse:	125	309	11	2	570	122	4	66	182	3	33	2
Added Vol:	0	0	0	0	0	0	0	0	0	0	0	0
PasserByVol:	0	0	0	0	0	0	0	0	0	0	0	0
Initial Fut:	125	309	11	2	570	122	4	66	182	3	33	2
User Adj:	1.00	1.00	1.00	1.00	1.00	1.00	1.00	1.00	1.00	1.00	1.00	1.00
PHF Adj:	1.00	1.00	1.00	1.00	1.00	1.00	1.00	1.00	1.00	1.00	1.00	1.00
PHF Volume:	125	309	11	2	570	122	4	66	182	3	33	2
Reduct Vol:	0	0	0	0	0	0	0	0	0	0	0	0
Reduced Vol:	125	309	11	2	570	122	4	66	182	3	33	2
PCE Adj:	1.00	1.00	1.00	1.00	1.00	1.00	1.00	1.00	1.00	1.00	1.00	1.00
MLF Adj:	1.00	1.00	1.00	1.00	1.00	1.00	1.00	1.00	1.00	1.00	1.00	1.00
FinalVolume:	125	309	11	2	570	122	4	66	182	3	33	2
Saturation Flow Module:												
Sat/Lane:	1900	1900	1900	1900	1900	1900	1900	1900	1900	1900	1900	1900
Adjustment:	0.95	0.95	0.95	0.54	0.93	0.93	0.95	0.85	0.85	1.00	0.94	0.94
Lanes:	1.00	1.93	0.07	1.00	1.65	0.35	1.00	1.00	1.00	1.00	1.89	0.11
Final Sat.:	1805	3468	123	1024	2896	620	1805	1606	1606	1900	3373	204
Capacity Analysis Module:												
Vol/Sat:	0.07	0.09	0.09	0.00	0.20	0.20	0.00	0.04	0.11	0.00	0.01	0.01
Crit Moves:	****				****			****				
Green/Cycle:	0.22	0.84	0.84	0.62	0.62	0.62	0.13	0.16	0.16	0.03	0.03	0.03
Volume/Cap:	0.32	0.11	0.11	0.00	0.32	0.32	0.02	0.26	0.71	0.04	0.32	0.32
Delay/Veh:	33.3	1.4	1.4	7.2	9.0	9.0	38.0	36.9	46.2	47.3	49.1	49.1
User DelAdj:	1.00	1.00	1.00	1.00	1.00	1.00	1.00	1.00	1.00	1.00	1.00	1.00
AdjDel/Veh:	33.3	1.4	1.4	7.2	9.0	9.0	38.0	36.9	46.2	47.3	49.1	49.1
LOS by Move:	C	A	A	A	A	A	D	D	D	D	D	D
HCM2kAvgQ:	3	1	1	0	5	5	0	2	7	0	1	1

Note: Queue reported is the number of cars per lane.

City of Murrieta General Plan
Existing General Plan
AM Peak Hour

Level Of Service Computation Report
2000 HCM Operations Method (Future Volume Alternative)

Intersection #108 Winchester Road - SR-79 & Keller Road

Cycle (sec): 100 Critical Vol./Cap.(X): 0.525
Loss Time (sec): 0 (Y+R=4.0 sec) Average Delay (sec/veh): 1.4
Optimal Cycle: 39 Level Of Service: A

Street Name:	Winchester Road - SR-79						Keller Road					
Approach:	North Bound			South Bound			East Bound			West Bound		
Movement:	L -	T -	R	L -	T -	R	L -	T -	R	L -	T -	R
Control:	Protected			Protected			Permitted			Permitted		
Rights:	Include			Include			Include			Include		
Min. Green:	0	0	0	0	0	0	0	0	0	0	0	0
Lanes:	1 0	2 1	0	1 0	2 1	0	1 0	1 1	0	1 0	1 1	0
Volume Module:												
Base Vol:	0	1593	27	4	2559	1	1	9	1	12	10	49
Growth Adj:	1.00	1.00	1.00	1.00	1.00	1.00	1.00	1.00	1.00	1.00	1.00	1.00
Initial Bse:	0	1593	27	4	2559	1	1	9	1	12	10	49
Added Vol:	0	0	0	0	0	0	0	0	0	0	0	0
PasserByVol:	0	0	0	0	0	0	0	0	0	0	0	0
Initial Fut:	0	1593	27	4	2559	1	1	9	1	12	10	49
User Adj:	1.00	1.00	1.00	1.00	1.00	1.00	1.00	1.00	1.00	1.00	1.00	1.00
PHF Adj:	1.00	1.00	1.00	1.00	1.00	1.00	1.00	1.00	1.00	1.00	1.00	1.00
PHF Volume:	0	1593	27	4	2559	1	1	9	1	12	10	49
Reduct Vol:	0	0	0	0	0	0	0	0	0	0	0	0
Reduced Vol:	0	1593	27	4	2559	1	1	9	1	12	10	49
PCE Adj:	1.00	1.00	1.00	1.00	1.00	1.00	1.00	1.00	1.00	1.00	1.00	1.00
MLF Adj:	1.00	1.00	1.00	1.00	1.00	1.00	1.00	1.00	1.00	1.00	1.00	1.00
FinalVolume:	0	1593	27	4	2559	1	1	9	1	12	10	49
Saturation Flow Module:												
Sat/Lane:	1900	1900	1900	1900	1900	1900	1900	1900	1900	1900	1900	1900
Adjustment:	1.00	0.91	0.91	0.95	0.91	0.91	0.68	0.94	0.94	0.72	0.83	0.83
Lanes:	1.00	2.95	0.05	1.00	2.99	0.01	1.00	1.80	0.20	1.00	1.00	1.00
Final Sat.:	1900	5085	86	1805	5185	2	1286	3200	356	1376	1579	1579
Capacity Analysis Module:												
Vol/Sat:	0.00	0.31	0.31	0.00	0.49	0.49	0.00	0.00	0.00	0.01	0.01	0.03
Crit Moves:	****				****							****
Green/Cycle:	0.00	0.93	0.93	0.01	0.94	0.94	0.06	0.06	0.06	0.06	0.06	0.06
Volume/Cap:	0.00	0.34	0.34	0.34	0.52	0.52	0.01	0.05	0.05	0.15	0.11	0.52
Delay/Veh:	0.0	0.4	0.4	65.4	0.5	0.5	44.4	44.5	44.5	45.5	44.6	50.2
User DelAdj:	1.00	1.00	1.00	1.00	1.00	1.00	1.00	1.00	1.00	1.00	1.00	1.00
AdjDel/Veh:	0.0	0.4	0.4	65.4	0.5	0.5	44.4	44.5	44.5	45.5	44.6	50.2
LOS by Move:	A	A	A	E	A	A	D	D	D	D	D	D
HCM2kAvgQ:	0	2	2	0	4	4	0	0	0	0	0	2

Note: Queue reported is the number of cars per lane.

City of Murrieta General Plan
Existing General Plan
AM Peak Hour

Level Of Service Computation Report
2000 HCM Operations Method (Future Volume Alternative)

Intersection #112 Leon Road & Jean Nicholas

Cycle (sec): 100 Critical Vol./Cap.(X): 0.342
Loss Time (sec): 0 (Y+R=4.0 sec) Average Delay (sec/veh): 23.0
Optimal Cycle: 35 Level Of Service: C

Street Name:	Leon Road						Jean Nicholas					
Approach:	North Bound			South Bound			East Bound			West Bound		
Movement:	L -	T -	R	L -	T -	R	L -	T -	R	L -	T -	R
Control:	Protected			Protected			Protected			Protected		
Rights:	Include			Include			Include			Include		
Min. Green:	0	0	0	0	0	0	0	0	0	0	0	0
Lanes:	1 0	1 1	0	1 0	1 1	0	1 0	1 1	0	1 0	1 1	0
Volume Module:												
Base Vol:	7	180	126	186	503	47	2	175	16	161	26	231
Growth Adj:	1.00	1.00	1.00	1.00	1.00	1.00	1.00	1.00	1.00	1.00	1.00	1.00
Initial Bse:	7	180	126	186	503	47	2	175	16	161	26	231
Added Vol:	0	0	0	0	0	0	0	0	0	0	0	0
PasserByVol:	0	0	0	0	0	0	0	0	0	0	0	0
Initial Fut:	7	180	126	186	503	47	2	175	16	161	26	231
User Adj:	1.00	1.00	1.00	1.00	1.00	1.00	1.00	1.00	1.00	1.00	1.00	1.00
PHF Adj:	1.00	1.00	1.00	1.00	1.00	1.00	1.00	1.00	1.00	1.00	1.00	1.00
PHF Volume:	7	180	126	186	503	47	2	175	16	161	26	231
Reduct Vol:	0	0	0	0	0	0	0	0	0	0	0	0
Reduced Vol:	7	180	126	186	503	47	2	175	16	161	26	231
PCE Adj:	1.00	1.00	1.00	1.00	1.00	1.00	1.00	1.00	1.00	1.00	1.00	1.00
MLF Adj:	1.00	1.00	1.00	1.00	1.00	1.00	1.00	1.00	1.00	1.00	1.00	1.00
FinalVolume:	7	180	126	186	503	47	2	175	16	161	26	231
Saturation Flow Module:												
Sat/Lane:	1900	1900	1900	1900	1900	1900	1900	1900	1900	1900	1900	1900
Adjustment:	0.95	0.89	0.89	0.95	0.94	0.94	0.95	0.94	0.94	0.95	0.82	0.82
Lanes:	1.00	1.18	0.82	1.00	1.83	0.17	1.00	1.83	0.17	1.00	1.00	1.00
Final Sat.:	1805	1992	1394	1805	3259	304	1805	3265	298	1805	1561	1561
Capacity Analysis Module:												
Vol/Sat:	0.00	0.09	0.09	0.10	0.15	0.15	0.00	0.05	0.05	0.09	0.02	0.15
Crit Moves:		****		****			****					****
Green/Cycle:	0.01	0.26	0.26	0.30	0.55	0.55	0.00	0.16	0.16	0.27	0.43	0.43
Volume/Cap:	0.28	0.34	0.34	0.34	0.28	0.28	0.34	0.33	0.33	0.33	0.04	0.34
Delay/Veh:	54.9	30.0	30.0	27.6	12.0	12.0	81.6	37.3	37.3	29.5	16.4	19.2
User DelAdj:	1.00	1.00	1.00	1.00	1.00	1.00	1.00	1.00	1.00	1.00	1.00	1.00
AdjDel/Veh:	54.9	30.0	30.0	27.6	12.0	12.0	81.6	37.3	37.3	29.5	16.4	19.2
LOS by Move:	D	C	C	C	B	B	F	D	D	C	B	B
HCM2kAvgQ:	1	4	4	5	5	5	0	3	3	4	0	5

Note: Queue reported is the number of cars per lane.

City of Murrieta General Plan
Existing General Plan
AM Peak Hour

Level Of Service Computation Report
2000 HCM Operations Method (Future Volume Alternative)

Intersection #122 Meadowlark Lane - Whitewood Road & Clinton Keith Road

Cycle (sec): 100 Critical Vol./Cap.(X): 1.009
Loss Time (sec): 0 (Y+R=4.0 sec) Average Delay (sec/veh): 54.9
Optimal Cycle: 180 Level Of Service: D

Street Name:	Meadowlark Lane - Whitewood Road						Clinton Keith Road					
Approach:	North Bound			South Bound			East Bound			West Bound		
Movement:	L -	T -	R	L -	T -	R	L -	T -	R	L -	T -	R
Control:	Protected			Protected			Protected			Protected		
Rights:	Include			Include			Include			Include		
Min. Green:	0	0	0	0	0	0	0	0	0	0	0	0
Lanes:	2 0	2 0	1	2 0	1 1	0	2 0	3 0	1	2 0	3 0	1
Volume Module:												
Base Vol:	55	37	784	296	117	567	636	997	106	865	988	195
Growth Adj:	1.00	1.00	1.00	1.00	1.00	1.00	1.00	1.00	1.00	1.00	1.00	1.00
Initial Bse:	55	37	784	296	117	567	636	997	106	865	988	195
Added Vol:	0	0	0	0	0	0	0	0	0	0	0	0
PasserByVol:	0	0	0	0	0	0	0	0	0	0	0	0
Initial Fut:	55	37	784	296	117	567	636	997	106	865	988	195
User Adj:	1.00	1.00	1.00	1.00	1.00	1.00	1.00	1.00	1.00	1.00	1.00	1.00
PHF Adj:	1.00	1.00	1.00	1.00	1.00	1.00	1.00	1.00	1.00	1.00	1.00	1.00
PHF Volume:	55	37	784	296	117	567	636	997	106	865	988	195
Reduct Vol:	0	0	0	0	0	0	0	0	0	0	0	0
Reduced Vol:	55	37	784	296	117	567	636	997	106	865	988	195
PCE Adj:	1.00	1.00	1.00	1.00	1.00	1.00	1.00	1.00	1.00	1.00	1.00	1.00
MLF Adj:	1.00	1.00	1.00	1.00	1.00	1.00	1.00	1.00	1.00	1.00	1.00	1.00
FinalVolume:	55	37	784	296	117	567	636	997	106	865	988	195
Saturation Flow Module:												
Sat/Lane:	1900	1900	1900	1900	1900	1900	1900	1900	1900	1900	1900	1900
Adjustment:	0.92	0.95	0.85	0.92	0.83	0.83	0.92	0.91	0.85	0.92	0.91	0.85
Lanes:	2.00	2.00	1.00	2.00	1.00	1.00	2.00	3.00	1.00	2.00	3.00	1.00
Final Sat.:	3502	3610	1615	3502	1581	1581	3502	5187	1615	3502	5187	1615
Capacity Analysis Module:												
Vol/Sat:	0.02	0.01	0.49	0.08	0.07	0.36	0.18	0.19	0.07	0.25	0.19	0.12
Crit Moves:			****	****				****		****		
Green/Cycle:	0.02	0.48	0.48	0.08	0.54	0.54	0.21	0.19	0.19	0.24	0.22	0.22
Volume/Cap:	0.66	0.02	1.01	1.01	0.14	0.66	0.85	1.01	0.34	1.01	0.85	0.54
Delay/Veh:	66.7	13.6	60.5	100.7	11.4	18.0	47.5	71.4	35.7	70.8	43.7	36.0
User DelAdj:	1.00	1.00	1.00	1.00	1.00	1.00	1.00	1.00	1.00	1.00	1.00	1.00
AdjDel/Veh:	66.7	13.6	60.5	100.7	11.4	18.0	47.5	71.4	35.7	70.8	43.7	36.0
LOS by Move:	E	B	E	F	B	B	D	E	D	E	D	D
HCM2kAvgQ:	2	0	32	9	2	14	13	17	3	20	14	6

Note: Queue reported is the number of cars per lane.

City of Murrieta General Plan
Existing General Plan
AM Peak Hour

Level Of Service Computation Report
2000 HCM Operations Method (Future Volume Alternative)

Intersection #138 Jefferson Avenue & Cherry Street

Cycle (sec): 100 Critical Vol./Cap.(X): 0.724
Loss Time (sec): 0 (Y+R=4.0 sec) Average Delay (sec/veh): 21.0
Optimal Cycle: 83 Level Of Service: C

Street Name:	Jefferson Avenue						Cherry Street					
Approach:	North Bound			South Bound			East Bound			West Bound		
Movement:	L -	T -	R	L -	T -	R	L -	T -	R	L -	T -	R
Control:	Protected			Protected			Protected			Protected		
Rights:	Include			Include			Include			Include		
Min. Green:	0	0	0	0	0	0	0	0	0	0	0	0
Lanes:	1 0	2 0	1	1 0	1 1	0	1 0	2 1	0	1 0	2 1	0
Volume Module:												
Base Vol:	84	575	187	35	644	21	2	55	7	141	1237	800
Growth Adj:	1.00	1.00	1.00	1.00	1.00	1.00	1.00	1.00	1.00	1.00	1.00	1.00
Initial Bse:	84	575	187	35	644	21	2	55	7	141	1237	800
Added Vol:	0	0	0	0	0	0	0	0	0	0	0	0
PasserByVol:	0	0	0	0	0	0	0	0	0	0	0	0
Initial Fut:	84	575	187	35	644	21	2	55	7	141	1237	800
User Adj:	1.00	1.00	1.00	1.00	1.00	1.00	1.00	1.00	1.00	1.00	1.00	1.00
PHF Adj:	1.00	1.00	1.00	1.00	1.00	1.00	1.00	1.00	1.00	1.00	1.00	1.00
PHF Volume:	84	575	187	35	644	21	2	55	7	141	1237	800
Reduct Vol:	0	0	0	0	0	0	0	0	0	0	0	0
Reduced Vol:	84	575	187	35	644	21	2	55	7	141	1237	800
PCE Adj:	1.00	1.00	1.00	1.00	1.00	1.00	1.00	1.00	1.00	1.00	1.00	1.00
MLF Adj:	1.00	1.00	1.00	1.00	1.00	1.00	1.00	1.00	1.00	1.00	1.00	1.00
FinalVolume:	84	575	187	35	644	21	2	55	7	141	1237	800
Saturation Flow Module:												
Sat/Lane:	1900	1900	1900	1900	1900	1900	1900	1900	1900	1900	1900	1900
Adjustment:	0.95	0.95	0.85	0.95	0.95	0.95	0.95	0.89	0.89	0.95	0.86	0.86
Lanes:	1.00	2.00	1.00	1.00	1.94	0.06	1.00	2.66	0.34	1.00	2.00	1.00
Final Sat.:	1805	3610	1615	1805	3479	113	1805	4523	576	1805	3254	1627
Capacity Analysis Module:												
Vol/Sat:	0.05	0.16	0.12	0.02	0.19	0.19	0.00	0.01	0.01	0.08	0.38	0.49
Crit Moves:	****				****		****					****
Green/Cycle:	0.06	0.29	0.29	0.03	0.26	0.26	0.00	0.09	0.09	0.59	0.68	0.68
Volume/Cap:	0.72	0.56	0.41	0.56	0.72	0.72	0.72	0.13	0.13	0.13	0.56	0.72
Delay/Veh:	66.1	31.1	29.5	58.3	36.9	36.9	342.8	41.9	41.9	9.2	8.5	11.1
User DelAdj:	1.00	1.00	1.00	1.00	1.00	1.00	1.00	1.00	1.00	1.00	1.00	1.00
AdjDel/Veh:	66.1	31.1	29.5	58.3	36.9	36.9	342.8	41.9	41.9	9.2	8.5	11.1
LOS by Move:	E	C	C	E	D	D	F	D	D	A	A	B
HCM2kAvgQ:	4	8	5	2	11	11	1	1	1	2	11	18

Note: Queue reported is the number of cars per lane.

City of Murrieta General Plan
Existing General Plan
AM Peak Hour

Level Of Service Computation Report
2000 HCM Operations Method (Future Volume Alternative)

Intersection #141 Jefferson Ave & Nutmeg St

Cycle (sec): 100 Critical Vol./Cap.(X): 0.993
Loss Time (sec): 0 (Y+R=4.0 sec) Average Delay (sec/veh): 52.0
Optimal Cycle: 180 Level Of Service: D

Street Name:	Jefferson Ave						Nutmeg St					
Approach:	North Bound			South Bound			East Bound			West Bound		
Movement:	L	T	R	L	T	R	L	T	R	L	T	R
Control:	Protected			Protected			Protected			Protected		
Rights:	Include			Include			Include			Include		
Min. Green:	0	0	0	0	0	0	0	0	0	0	0	0
Lanes:	1 0	2 1	0	1 0	2 1	0	1 0	1 1	0	1 0	1 1	0
Volume Module:												
Base Vol:	207	364	240	65	1665	61	97	182	544	369	171	66
Growth Adj:	1.00	1.00	1.00	1.00	1.00	1.00	1.00	1.00	1.00	1.00	1.00	1.00
Initial Bse:	207	364	240	65	1665	61	97	182	544	369	171	66
Added Vol:	0	0	0	0	0	0	0	0	0	0	0	0
PasserByVol:	0	0	0	0	0	0	0	0	0	0	0	0
Initial Fut:	207	364	240	65	1665	61	97	182	544	369	171	66
User Adj:	1.00	1.00	1.00	1.00	1.00	1.00	1.00	1.00	1.00	1.00	1.00	1.00
PHF Adj:	1.00	1.00	1.00	1.00	1.00	1.00	1.00	1.00	1.00	1.00	1.00	1.00
PHF Volume:	207	364	240	65	1665	61	97	182	544	369	171	66
Reduct Vol:	0	0	0	0	0	0	0	0	0	0	0	0
Reduced Vol:	207	364	240	65	1665	61	97	182	544	369	171	66
PCE Adj:	1.00	1.00	1.00	1.00	1.00	1.00	1.00	1.00	1.00	1.00	1.00	1.00
MLF Adj:	1.00	1.00	1.00	1.00	1.00	1.00	1.00	1.00	1.00	1.00	1.00	1.00
FinalVolume:	207	364	240	65	1665	61	97	182	544	369	171	66
Saturation Flow Module:												
Sat/Lane:	1900	1900	1900	1900	1900	1900	1900	1900	1900	1900	1900	1900
Adjustment:	0.95	0.86	0.86	0.95	0.91	0.91	0.95	0.84	0.84	0.95	0.91	0.91
Lanes:	1.00	2.00	1.00	1.00	2.89	0.11	1.00	1.00	1.00	1.00	1.44	0.56
Final Sat.:	1805	3251	1625	1805	4979	182	1805	1603	1603	1805	2495	963
Capacity Analysis Module:												
Vol/Sat:	0.11	0.11	0.15	0.04	0.33	0.33	0.05	0.11	0.34	0.20	0.07	0.07
Crit Moves:	****				****				****	****		
Green/Cycle:	0.12	0.36	0.36	0.09	0.34	0.34	0.24	0.34	0.34	0.21	0.31	0.31
Volume/Cap:	0.99	0.31	0.41	0.41	0.99	0.99	0.22	0.33	0.99	0.99	0.22	0.22
Delay/Veh:	104.4	22.9	23.9	44.8	52.9	52.9	30.7	24.5	64.2	84.3	25.9	25.9
User DelAdj:	1.00	1.00	1.00	1.00	1.00	1.00	1.00	1.00	1.00	1.00	1.00	1.00
AdjDel/Veh:	104.4	22.9	23.9	44.8	52.9	52.9	30.7	24.5	64.2	84.3	25.9	25.9
LOS by Move:	F	C	C	D	D	D	C	C	E	F	C	C
HCM2kAvgQ:	11	4	6	2	26	26	2	4	24	17	3	3

Note: Queue reported is the number of cars per lane.

City of Murrieta General Plan
Existing General Plan
AM Peak Hour

Level Of Service Computation Report
2000 HCM Operations Method (Future Volume Alternative)

Intersection #142 Jefferson Ave & Magnolia St

Cycle (sec): 100 Critical Vol./Cap.(X): 0.665
Loss Time (sec): 0 (Y+R=4.0 sec) Average Delay (sec/veh): 10.4
Optimal Cycle: 68 Level Of Service: B

Street Name:	Jefferson Ave						Magnolia St					
Approach:	North Bound			South Bound			East Bound			West Bound		
Movement:	L	T	R	L	T	R	L	T	R	L	T	R
Control:	Protected			Protected			Protected			Protected		
Rights:	Include			Include			Include			Include		
Min. Green:	0	0	0	0	0	0	0	0	0	0	0	0
Lanes:	1 0	2 1	0	1 0	2 1	0	1 0	0 1	0	1 0	0 1	0
Volume Module:												
Base Vol:	84	676	8	7	2381	226	154	1	151	27	3	1
Growth Adj:	1.00	1.00	1.00	1.00	1.00	1.00	1.00	1.00	1.00	1.00	1.00	1.00
Initial Bse:	84	676	8	7	2381	226	154	1	151	27	3	1
Added Vol:	0	0	0	0	0	0	0	0	0	0	0	0
PasserByVol:	0	0	0	0	0	0	0	0	0	0	0	0
Initial Fut:	84	676	8	7	2381	226	154	1	151	27	3	1
User Adj:	1.00	1.00	1.00	1.00	1.00	1.00	1.00	1.00	1.00	1.00	1.00	1.00
PHF Adj:	1.00	1.00	1.00	1.00	1.00	1.00	1.00	1.00	1.00	1.00	1.00	1.00
PHF Volume:	84	676	8	7	2381	226	154	1	151	27	3	1
Reduct Vol:	0	0	0	0	0	0	0	0	0	0	0	0
Reduced Vol:	84	676	8	7	2381	226	154	1	151	27	3	1
PCE Adj:	1.00	1.00	1.00	1.00	1.00	1.00	1.00	1.00	1.00	1.00	1.00	1.00
MLF Adj:	1.00	1.00	1.00	1.00	1.00	1.00	1.00	1.00	1.00	1.00	1.00	1.00
FinalVolume:	84	676	8	7	2381	226	154	1	151	27	3	1
Saturation Flow Module:												
Sat/Lane:	1900	1900	1900	1900	1900	1900	1900	1900	1900	1900	1900	1900
Adjustment:	0.95	0.91	0.91	0.95	0.90	0.90	0.95	0.85	0.85	0.95	0.96	0.96
Lanes:	1.00	2.96	0.04	1.00	2.74	0.26	1.00	0.01	0.99	1.00	0.75	0.25
Final Sat.:	1805	5116	61	1805	4676	444	1805	11	1606	1805	1372	457
Capacity Analysis Module:												
Vol/Sat:	0.05	0.13	0.13	0.00	0.51	0.51	0.09	0.09	0.09	0.01	0.00	0.00
Crit Moves:	****				****			****		****		
Green/Cycle:	0.07	0.81	0.81	0.02	0.77	0.77	0.16	0.14	0.14	0.02	0.00	0.00
Volume/Cap:	0.66	0.16	0.16	0.16	0.66	0.66	0.53	0.66	0.66	0.66	0.53	0.53
Delay/Veh:	58.0	2.0	2.0	49.6	6.0	6.0	40.5	47.9	47.9	83.1	109	108.6
User DelAdj:	1.00	1.00	1.00	1.00	1.00	1.00	1.00	1.00	1.00	1.00	1.00	1.00
AdjDel/Veh:	58.0	2.0	2.0	49.6	6.0	6.0	40.5	47.9	47.9	83.1	109	108.6
LOS by Move:	E	A	A	D	A	A	D	D	D	F	F	F
HCM2kAvgQ:	4	2	2	0	15	15	5	6	6	2	1	1

Note: Queue reported is the number of cars per lane.

City of Murrieta General Plan
Existing General Plan
AM Peak Hour

Level Of Service Computation Report
2000 HCM Operations Method (Future Volume Alternative)

Intersection #149 Monroe Ave & Murrieta Hot Springs Rd

Cycle (sec): 100 Critical Vol./Cap.(X): 0.327
Loss Time (sec): 0 (Y+R=4.0 sec) Average Delay (sec/veh): 7.9
Optimal Cycle: 34 Level Of Service: A

Street Name:	Monroe Ave						Murrieta Hot Springs Rd					
Approach:	North Bound			South Bound			East Bound			West Bound		
Movement:	L - T - R			L - T - R			L - T - R			L - T - R		
Control:	Protected			Protected			Protected			Protected		
Rights:	Include			Ovl			Ovl			Include		
Min. Green:	0	0	0	0	0	0	0	0	0	0	0	0
Lanes:	1 0	2 0	1	1 0	2 0	1	1 0	4 0	1	1 0	3 1	0
Volume Module:												
Base Vol:	40	79	48	1	36	77	113	1200	15	4	1576	26
Growth Adj:	1.00	1.00	1.00	1.00	1.00	1.00	1.00	1.00	1.00	1.00	1.00	1.00
Initial Bse:	40	79	48	1	36	77	113	1200	15	4	1576	26
Added Vol:	0	0	0	0	0	0	0	0	0	0	0	0
PasserByVol:	0	0	0	0	0	0	0	0	0	0	0	0
Initial Fut:	40	79	48	1	36	77	113	1200	15	4	1576	26
User Adj:	1.00	1.00	1.00	1.00	1.00	1.00	1.00	1.00	1.00	1.00	1.00	1.00
PHF Adj:	1.00	1.00	1.00	1.00	1.00	1.00	1.00	1.00	1.00	1.00	1.00	1.00
PHF Volume:	40	79	48	1	36	77	113	1200	15	4	1576	26
Reduct Vol:	0	0	0	0	0	0	0	0	0	0	0	0
Reduced Vol:	40	79	48	1	36	77	113	1200	15	4	1576	26
PCE Adj:	1.00	1.00	1.00	1.00	1.00	1.00	1.00	1.00	1.00	1.00	1.00	1.00
MLF Adj:	1.00	1.00	1.00	1.00	1.00	1.00	1.00	1.00	1.00	1.00	1.00	1.00
FinalVolume:	40	79	48	1	36	77	113	1200	15	4	1576	26
Saturation Flow Module:												
Sat/Lane:	1900	1900	1900	1900	1900	1900	1900	1900	1900	1900	1900	1900
Adjustment:	0.95	0.95	0.85	0.95	0.95	0.85	0.95	0.91	0.85	0.95	0.91	0.91
Lanes:	1.00	2.00	1.00	1.00	2.00	1.00	1.00	4.00	1.00	1.00	3.94	0.06
Final Sat.:	1805	3610	1615	1805	3610	1615	1805	6916	1615	1805	6790	112
Capacity Analysis Module:												
Vol/Sat:	0.02	0.02	0.03	0.00	0.01	0.05	0.06	0.17	0.01	0.00	0.23	0.23
Crit Moves:	****				****		****				****	
Green/Cycle:	0.07	0.10	0.10	0.00	0.03	0.22	0.19	0.89	0.96	0.01	0.71	0.71
Volume/Cap:	0.33	0.23	0.31	0.31	0.33	0.21	0.33	0.19	0.01	0.19	0.33	0.33
Delay/Veh:	46.0	42.1	43.2	97.0	49.2	32.1	35.4	0.7	0.1	53.6	5.5	5.5
User DelAdj:	1.00	1.00	1.00	1.00	1.00	1.00	1.00	1.00	1.00	1.00	1.00	1.00
AdjDel/Veh:	46.0	42.1	43.2	97.0	49.2	32.1	35.4	0.7	0.1	53.6	5.5	5.5
LOS by Move:	D	D	D	F	D	C	D	A	A	D	A	A
HCM2kAvgQ:	2	1	2	0	1	2	3	1	0	0	5	5

Note: Queue reported is the number of cars per lane.

City of Murrieta General Plan
Existing General Plan
AM Peak Hour

Level Of Service Computation Report
2000 HCM Operations Method (Future Volume Alternative)

Intersection #158 Adams Ave & Guava St

Cycle (sec): 100 Critical Vol./Cap.(X): 0.293
Loss Time (sec): 0 (Y+R=4.0 sec) Average Delay (sec/veh): 11.5
Optimal Cycle: 20 Level Of Service: B

Street Name:	Adams Ave						Guava St					
Approach:	North Bound			South Bound			East Bound			West Bound		
Movement:	L - T - R			L - T - R			L - T - R			L - T - R		
Control:	Permitted			Permitted			Permitted			Permitted		
Rights:	Include			Include			Include			Include		
Min. Green:	0	0	0	0	0	0	0	0	0	0	0	0
Lanes:	1 0	1 1	0	1 0	1 1	0	1 0	0 1	0	1 0	0 1	0
Volume Module:												
Base Vol:	64	67	17	100	21	41	19	308	46	3	286	101
Growth Adj:	1.00	1.00	1.00	1.00	1.00	1.00	1.00	1.00	1.00	1.00	1.00	1.00
Initial Bse:	64	67	17	100	21	41	19	308	46	3	286	101
Added Vol:	0	0	0	0	0	0	0	0	0	0	0	0
PasserByVol:	0	0	0	0	0	0	0	0	0	0	0	0
Initial Fut:	64	67	17	100	21	41	19	308	46	3	286	101
User Adj:	1.00	1.00	1.00	1.00	1.00	1.00	1.00	1.00	1.00	1.00	1.00	1.00
PHF Adj:	1.00	1.00	1.00	1.00	1.00	1.00	1.00	1.00	1.00	1.00	1.00	1.00
PHF Volume:	64	67	17	100	21	41	19	308	46	3	286	101
Reduct Vol:	0	0	0	0	0	0	0	0	0	0	0	0
Reduced Vol:	64	67	17	100	21	41	19	308	46	3	286	101
PCE Adj:	1.00	1.00	1.00	1.00	1.00	1.00	1.00	1.00	1.00	1.00	1.00	1.00
MLF Adj:	1.00	1.00	1.00	1.00	1.00	1.00	1.00	1.00	1.00	1.00	1.00	1.00
FinalVolume:	64	67	17	100	21	41	19	308	46	3	286	101
Saturation Flow Module:												
Sat/Lane:	1900	1900	1900	1900	1900	1900	1900	1900	1900	1900	1900	1900
Adjustment:	0.68	0.92	0.92	0.65	0.86	0.86	0.48	0.98	0.98	0.50	0.96	0.96
Lanes:	1.00	1.60	0.40	1.00	1.00	1.00	1.00	0.87	0.13	1.00	0.74	0.26
Final Sat.:	1294	2793	709	1239	1626	1626	904	1622	242	941	1349	477
Capacity Analysis Module:												
Vol/Sat:	0.05	0.02	0.02	0.08	0.01	0.03	0.02	0.19	0.19	0.00	0.21	0.21
Crit Moves:				****							****	
Green/Cycle:	0.28	0.28	0.28	0.28	0.28	0.28	0.72	0.72	0.72	0.72	0.72	0.72
Volume/Cap:	0.18	0.09	0.09	0.29	0.05	0.09	0.03	0.26	0.26	0.00	0.29	0.29
Delay/Veh:	27.8	26.9	26.9	29.0	26.6	27.0	3.9	4.8	4.8	3.8	5.0	5.0
User DelAdj:	1.00	1.00	1.00	1.00	1.00	1.00	1.00	1.00	1.00	1.00	1.00	1.00
AdjDel/Veh:	27.8	26.9	26.9	29.0	26.6	27.0	3.9	4.8	4.8	3.8	5.0	5.0
LOS by Move:	C	C	C	C	C	C	A	A	A	A	A	A
HCM2kAvgQ:	2	1	1	3	0	1	0	4	4	0	4	4

Note: Queue reported is the number of cars per lane.

City of Murrieta General Plan
Existing General Plan
PM Peak Hour

Scenario Report

Scenario:	Existing GP PM
Command:	Existing GP PM
Volume:	Existing GP PM
Geometry:	Future
Impact Fee:	Default Impact Fee
Trip Generation:	Default Trip Generation
Trip Distribution:	Default Trip Distribution
Paths:	Default Path
Routes:	Default Route
Configuration:	Existing GP PM

City of Murrieta General Plan
Existing General Plan
PM Peak Hour

Turning Movement Report

Volume	Northbound			Southbound			Eastbound			Westbound			Total
Type	Left	Thru	Right	Left	Thru	Right	Left	Thru	Right	Left	Thru	Right	Volume
#1 Menifee Road & Scott Road													
Base	266	573	803	183	308	90	219	850	466	491	555	538	5342
Added	0	0	0	0	0	0	0	0	0	0	0	0	0
Total	266	573	803	183	308	90	219	850	466	491	555	538	5342
#2 Leon Road & Scott Road													
Base	0	0	0	0	0	0	0	0	0	0	0	0	0
Added	0	0	0	0	0	0	0	0	0	0	0	0	0
Total	0	0	0	0	0	0	0	0	0	0	0	0	0
#3 Winchester Road/SR-79 & Scott Road													
Base	120	2428	27	1146	1909	132	110	269	111	0	219	1083	7554
Added	0	0	0	0	0	0	0	0	0	0	0	0	0
Total	120	2428	27	1146	1909	132	110	269	111	0	219	1083	7554
#4 Antelope Road & Keller Road													
Base	0	0	0	0	0	0	0	0	0	0	0	0	0
Added	0	0	0	0	0	0	0	0	0	0	0	0	0
Total	0	0	0	0	0	0	0	0	0	0	0	0	0
#5 Menifee Road - Meadowlark Road & Keller Road													
Base	0	0	0	0	0	0	0	0	0	0	0	0	0
Added	0	0	0	0	0	0	0	0	0	0	0	0	0
Total	0	0	0	0	0	0	0	0	0	0	0	0	0
#6 Briggs Road & Keller Road													
Base	310	85	102	1	51	83	11	261	609	9	283	4	1809
Added	0	0	0	0	0	0	0	0	0	0	0	0	0
Total	310	85	102	1	51	83	11	261	609	9	283	4	1809
#7 Leon Road & Keller Road													
Base	0	0	0	0	0	0	0	0	0	0	0	0	0
Added	0	0	0	0	0	0	0	0	0	0	0	0	0
Total	0	0	0	0	0	0	0	0	0	0	0	0	0
#8 Winchester Road - SR-79 & Keller Road													
Base	0	0	0	0	0	0	0	0	0	0	0	0	0
Added	0	0	0	0	0	0	0	0	0	0	0	0	0
Total	0	0	0	0	0	0	0	0	0	0	0	0	0
#9 Antelope Road & Golden City Drive - Baxter Road													
Base	2	286	800	230	831	14	3	182	33	279	92	691	3443
Added	0	0	0	0	0	0	0	0	0	0	0	0	0
Total	2	286	800	230	831	14	3	182	33	279	92	691	3443

City of Murrieta General Plan
Existing General Plan
PM Peak Hour

Volume Type	Northbound Left	Thru	Right	Southbound Left	Thru	Right	Eastbound Left	Thru	Right	Westbound Left	Thru	Right	Total Volume
#10 Whitewood Roa - /Meadowlark Road & Golden City Drive - Baxter Road													
Base	208	1107	3	0	538	762	263	12	875	0	7	2	3777
Added	0	0	0	0	0	0	0	0	0	0	0	0	0
Total	208	1107	3	0	538	762	263	12	875	0	7	2	3777
#11 Briggs Road & Baxter Road - Jean Nicholas													
Base	0	384	85	34	525	0	0	0	0	16	0	113	1157
Added	0	0	0	0	0	0	0	0	0	0	0	0	0
Total	0	384	85	34	525	0	0	0	0	16	0	113	1157
#12 Leon Road & Jean Nicholas													
Base	0	0	0	0	0	0	0	0	0	0	0	0	0
Added	0	0	0	0	0	0	0	0	0	0	0	0	0
Total	0	0	0	0	0	0	0	0	0	0	0	0	0
#13 Winchester Road - SR-79 & Nicholas - Skyview													
Base	207	2617	191	66	1966	17	33	538	112	141	415	110	6413
Added	0	0	0	0	0	0	0	0	0	0	0	0	0
Total	207	2617	191	66	1966	17	33	538	112	141	415	110	6413
#14 Antelope Road & Linnel Lane Extension													
Base	16	460	75	97	640	519	164	532	175	10	160	231	3079
Added	0	0	0	0	0	0	0	0	0	0	0	0	0
Total	16	460	75	97	640	519	164	532	175	10	160	231	3079
#15 Whitewood Road - Meadowlark Road & Linnel Lane Extension													
Base	13	901	4	5	1049	379	340	29	339	1	8	27	3095
Added	0	0	0	0	0	0	0	0	0	0	0	0	0
Total	13	901	4	5	1049	379	340	29	339	1	8	27	3095
#16 Leon Road & Max Gillis Road													
Base	495	409	485	368	261	148	97	164	373	461	326	359	3946
Added	0	0	0	0	0	0	0	0	0	0	0	0	0
Total	495	409	485	368	261	148	97	164	373	461	326	359	3946
#17 Winchester Road - SR-79 & Max Gillis - Thompson													
Base	202	2469	88	306	1298	550	651	291	124	37	243	98	6357
Added	0	0	0	0	0	0	0	0	0	0	0	0	0
Total	202	2469	88	306	1298	550	651	291	124	37	243	98	6357
#18 California Oaks Road & Clinton Keith Road													
Base	309	0	1008	0	0	0	0	2183	132	477	2389	0	6498
Added	0	0	0	0	0	0	0	0	0	0	0	0	0
Total	309	0	1008	0	0	0	0	2183	132	477	2389	0	6498

City of Murrieta General Plan
Existing General Plan
PM Peak Hour

Volume Type	Northbound Left	Thru	Right	Southbound Left	Thru	Right	Eastbound Left	Thru	Right	Westbound Left	Thru	Right	Total Volume
#19 I-215 SB Off-Ramp & Clinton Keith Road													
Base	0	0	0	34	1	626	0	2385	650	0	2165	145	6006
Added	0	0	0	0	0	0	0	0	0	0	0	0	0
Total	0	0	0	34	1	626	0	2385	650	0	2165	145	6006
#20 I-215 NB Off Ramp & Clinton Keith Road													
Base	347	1	384	0	0	0	0	1391	271	0	2404	265	5063
Added	0	0	0	0	0	0	0	0	0	0	0	0	0
Total	347	1	384	0	0	0	0	1391	271	0	2404	265	5063
#21 Antelope Road & Clinton Keith Road													
Base	0	0	0	39	0	627	136	1706	0	0	1684	211	4403
Added	0	0	0	0	0	0	0	0	0	0	0	0	0
Total	0	0	0	39	0	627	136	1706	0	0	1684	211	4403
#22 Meadowlark Lane - Whitewood Road & Clinton Keith Road													
Base	0	0	0	0	0	0	0	0	0	0	0	0	0
Added	0	0	0	0	0	0	0	0	0	0	0	0	0
Total	0	0	0	0	0	0	0	0	0	0	0	0	0
#23 Liberty Road & Clinton Keith Road													
Base	54	0	191	0	0	0	0	2141	122	16	2007	0	4531
Added	0	0	0	0	0	0	0	0	0	0	0	0	0
Total	54	0	191	0	0	0	0	2141	122	16	2007	0	4531
#24 Leon Road & Clinton Keith Road													
Base	0	0	0	131	0	1031	481	1831	0	0	996	834	5304
Added	0	0	0	0	0	0	0	0	0	0	0	0	0
Total	0	0	0	131	0	1031	481	1831	0	0	996	834	5304
#25 Winchester Road - SR-79 & Benton Road													
Base	598	2525	712	55	1001	480	69	556	1481	230	683	69	8459
Added	0	0	0	0	0	0	0	0	0	0	0	0	0
Total	598	2525	712	55	1001	480	69	556	1481	230	683	69	8459
#26 Winchester Road - SR-79 & Via Mira Mosa													
Base	62	3221	238	125	2142	363	243	32	52	223	39	136	6876
Added	0	0	0	0	0	0	0	0	0	0	0	0	0
Total	62	3221	238	125	2142	363	243	32	52	223	39	136	6876
#27 Monroe Ave & Los Alamos													
Base	28	450	277	269	347	63	207	1442	176	98	954	464	4775
Added	0	0	0	0	0	0	0	0	0	0	0	0	0
Total	28	450	277	269	347	63	207	1442	176	98	954	464	4775

City of Murrieta General Plan
Existing General Plan
PM Peak Hour

Volume Type	Northbound Left	Thru	Right	Southbound Left	Thru	Right	Eastbound Left	Thru	Right	Westbound Left	Thru	Right	Total Volume
#28 Jefferson Avenue & Murrieta Hot Springs Road													
Base	7	2262	1299	650	1005	66	33	187	121	648	97	752	7127
Added	0	0	0	0	0	0	0	0	0	0	0	0	0
Total	7	2262	1299	650	1005	66	33	187	121	648	97	752	7127
#29 Madison Avenue & Murrieta Hot Springs Road													
Base	326	599	1158	335	252	123	398	1650	318	824	1291	199	7473
Added	0	0	0	0	0	0	0	0	0	0	0	0	0
Total	326	599	1158	335	252	123	398	1650	318	824	1291	199	7473
#30 I-15 SB Off-Ramp & Murrieta Hot Springs Road													
Base	0	0	0	685	0	412	0	2604	495	0	2333	112	6641
Added	0	0	0	0	0	0	0	0	0	0	0	0	0
Total	0	0	0	685	0	412	0	2604	495	0	2333	112	6641
#31 I-15 NB Off-Ramp & Murrieta Hot Springs Road													
Base	197	0	259	0	0	0	0	3038	315	0	1736	1673	7218
Added	0	0	0	0	0	0	0	0	0	0	0	0	0
Total	197	0	259	0	0	0	0	3038	315	0	1736	1673	7218
#32 I-215 SB Off-Ramp & Murrieta Hot Springs Road													
Base	0	0	0	454	0	377	0	3355	139	0	2497	238	7060
Added	0	0	0	0	0	0	0	0	0	0	0	0	0
Total	0	0	0	454	0	377	0	3355	139	0	2497	238	7060
#33 I-215 NB Off-Ramp & Murrieta Hot Springs Road													
Base	82	0	479	0	0	0	0	2317	104	0	2514	1369	6865
Added	0	0	0	0	0	0	0	0	0	0	0	0	0
Total	82	0	479	0	0	0	0	2317	104	0	2514	1369	6865
#34 Jackson Avenue & Murrieta Hot Springs Road													
Base	243	0	183	0	0	0	0	1896	62	205	2590	0	5179
Added	0	0	0	0	0	0	0	0	0	0	0	0	0
Total	243	0	183	0	0	0	0	1896	62	205	2590	0	5179
#35 Margarita Road & Murrieta Hot Springs Road													
Base	920	70	411	196	80	146	47	1676	506	302	1659	40	6053
Added	0	0	0	0	0	0	0	0	0	0	0	0	0
Total	920	70	411	196	80	146	47	1676	506	302	1659	40	6053
#36 French Valley Parkway & Murrieta Hot Springs Road													
Base	39	0	1065	0	0	0	0	1730	367	395	1715	0	5311
Added	0	0	0	0	0	0	0	0	0	0	0	0	0
Total	39	0	1065	0	0	0	0	1730	367	395	1715	0	5311

City of Murrieta General Plan
Existing General Plan
PM Peak Hour

Volume Type	Northbound Left	Thru	Right	Southbound Left	Thru	Right	Eastbound Left	Thru	Right	Westbound Left	Thru	Right	Total Volume
#37 Jefferson Avenue & Guava Street													
Base	19	3211	10	8	1077	377	99	81	148	1	27	4	5062
Added	0	0	0	0	0	0	0	0	0	0	0	0	0
Total	19	3211	10	8	1077	377	99	81	148	1	27	4	5062
#38 Jefferson Avenue & Cherry Street													
Base	0	0	0	0	0	0	0	0	0	0	0	0	0
Added	0	0	0	0	0	0	0	0	0	0	0	0	0
Total	0	0	0	0	0	0	0	0	0	0	0	0	0
#39 Washington Ave & Calle Del Oso Oro/Nutmeg													
Base	375	257	150	105	234	49	23	229	268	175	613	148	2626
Added	0	0	0	0	0	0	0	0	0	0	0	0	0
Total	375	257	150	105	234	49	23	229	268	175	613	148	2626
#40 Clinton Keith Rd & Calle de Oso Oro/Bear Creek Dr													
Base	72	174	204	17	90	270	190	532	134	225	743	10	2661
Added	0	0	0	0	0	0	0	0	0	0	0	0	0
Total	72	174	204	17	90	270	190	532	134	225	743	10	2661
#41 Jefferson Ave & Nutmeg St													
Base	0	0	0	0	0	0	0	0	0	0	0	0	0
Added	0	0	0	0	0	0	0	0	0	0	0	0	0
Total	0	0	0	0	0	0	0	0	0	0	0	0	0
#42 Jefferson Ave & Magnolia St													
Base	0	0	0	0	0	0	0	0	0	0	0	0	0
Added	0	0	0	0	0	0	0	0	0	0	0	0	0
Total	0	0	0	0	0	0	0	0	0	0	0	0	0
#43 Jefferson Ave & Lemon St													
Base	288	2116	2	6	1657	32	35	32	193	16	17	16	4410
Added	0	0	0	0	0	0	0	0	0	0	0	0	0
Total	288	2116	2	6	1657	32	35	32	193	16	17	16	4410
#44 Jefferson Ave & Kalmia St													
Base	375	1717	938	863	1193	28	28	553	266	308	429	750	7448
Added	0	0	0	0	0	0	0	0	0	0	0	0	0
Total	375	1717	938	863	1193	28	28	553	266	308	429	750	7448
#45 Jefferson Ave & Juniper St													
Base	76	2804	103	67	1622	36	168	68	203	33	48	140	5368
Added	0	0	0	0	0	0	0	0	0	0	0	0	0
Total	76	2804	103	67	1622	36	168	68	203	33	48	140	5368

City of Murrieta General Plan
Existing General Plan
PM Peak Hour

Volume Type	Northbound Left	Thru	Right	Southbound Left	Thru	Right	Eastbound Left	Thru	Right	Westbound Left	Thru	Right	Total Volume
#46 Jefferson Ave & Ivy St/Los Alamos Rd													
Base	172	2384	604	424	1349	66	81	179	149	211	139	452	6210
Added	0	0	0	0	0	0	0	0	0	0	0	0	0
Total	172	2384	604	424	1349	66	81	179	149	211	139	452	6210
#47 Madison Ave & Kalmia St													
Base	0	0	0	0	0	0	0	0	0	0	0	0	0
Added	0	0	0	0	0	0	0	0	0	0	0	0	0
Total	0	0	0	0	0	0	0	0	0	0	0	0	0
#48 Madison Ave/I-15 SB Ramps & Kalmia St													
Base	365	0	904	315	30	362	0	2375	260	267	1344	623	6845
Added	0	0	0	0	0	0	0	0	0	0	0	0	0
Total	365	0	904	315	30	362	0	2375	260	267	1344	623	6845
#49 Monroe Ave & Murrieta Hot Springs Rd													
Base	0	0	0	0	0	0	0	0	0	0	0	0	0
Added	0	0	0	0	0	0	0	0	0	0	0	0	0
Total	0	0	0	0	0	0	0	0	0	0	0	0	0
#50 Hancock Ave & Murrieta Hot Springs Rd													
Base	0	0	0	593	0	886	869	3294	0	0	2591	343	8576
Added	0	0	0	0	0	0	0	0	0	0	0	0	0
Total	0	0	0	593	0	886	869	3294	0	0	2591	343	8576
#51 Alta Murrieta Dr & Murrieta Hot Springs Rd													
Base	597	213	51	187	123	492	691	1712	523	173	2399	150	7311
Added	0	0	0	0	0	0	0	0	0	0	0	0	0
Total	597	213	51	187	123	492	691	1712	523	173	2399	150	7311
#52 Winchester Road - SR-79 & Murrieta Hot Springs Rd													
Base	328	2015	202	194	1225	1054	1397	989	283	273	758	104	8822
Added	0	0	0	0	0	0	0	0	0	0	0	0	0
Total	328	2015	202	194	1225	1054	1397	989	283	273	758	104	8822
#53 Hancock Ave & Los Alamos Rd													
Base	125	456	917	649	136	24	100	1883	52	602	1217	649	6810
Added	0	0	0	0	0	0	0	0	0	0	0	0	0
Total	125	456	917	649	136	24	100	1883	52	602	1217	649	6810
#54 I-215 SB Ramps & Los Alamos Rd													
Base	0	0	0	529	0	1508	0	3000	483	152	1171	0	6843
Added	0	0	0	0	0	0	0	0	0	0	0	0	0
Total	0	0	0	529	0	1508	0	3000	483	152	1171	0	6843

City of Murrieta General Plan
Existing General Plan
PM Peak Hour

Volume Type	Northbound Left	Thru	Right	Southbound Left	Thru	Right	Eastbound Left	Thru	Right	Westbound Left	Thru	Right	Total Volume
#55 I-215 NB Ramps & Los Alamos Rd													
Base	211	7	114	0	0	0	1587	1856	0	0	1110	242	5127
Added	0	0	0	0	0	0	0	0	0	0	0	0	0
Total	211	7	114	0	0	0	1587	1856	0	0	1110	242	5127
#56 Whitewood Rd & Los Alamos Rd													
Base	131	558	41	33	482	433	690	356	256	60	191	41	3272
Added	0	0	0	0	0	0	0	0	0	0	0	0	0
Total	131	558	41	33	482	433	690	356	256	60	191	41	3272
#57 Whitewood Rd & Murrieta Hot Springs Rd													
Base	438	307	484	299	219	212	173	1608	168	367	2267	448	6990
Added	0	0	0	0	0	0	0	0	0	0	0	0	0
Total	438	307	484	299	219	212	173	1608	168	367	2267	448	6990
#58 Adams Ave & Guava St													
Base	0	0	0	0	0	0	0	0	0	0	0	0	0
Added	0	0	0	0	0	0	0	0	0	0	0	0	0
Total	0	0	0	0	0	0	0	0	0	0	0	0	0
#59 Nutmeg St & Clinton Keith Rd													
Base	57	78	423	277	29	52	96	1702	62	479	1742	341	5338
Added	0	0	0	0	0	0	0	0	0	0	0	0	0
Total	57	78	423	277	29	52	96	1702	62	479	1742	341	5338
#60 Murrieta Oaks Ave-Mitchell Rd & Clinton Keith Rd													
Base	21	114	25	57	147	488	80	2903	25	40	2677	250	6827
Added	0	0	0	0	0	0	0	0	0	0	0	0	0
Total	21	114	25	57	147	488	80	2903	25	40	2677	250	6827
#61 I-215 SB Ramps & Scott Rd													
Base	0	0	0	153	0	273	0	763	404	0	1500	409	3502
Added	0	0	0	0	0	0	0	0	0	0	0	0	0
Total	0	0	0	153	0	273	0	763	404	0	1500	409	3502
#62 I-215 NB Ramps & Scott Rd													
Base	0	9	742	0	0	496	128	920	0	0	1538	345	4178
Added	0	0	0	0	0	0	0	0	0	0	0	0	0
Total	0	9	742	0	0	496	128	920	0	0	1538	345	4178
#102 Leon Road & Scott Road													
Base	515	367	15	62	192	398	575	495	441	4	385	155	3604
Added	0	0	0	0	0	0	0	0	0	0	0	0	0
Total	515	367	15	62	192	398	575	495	441	4	385	155	3604

City of Murrieta General Plan
Existing General Plan
PM Peak Hour

Volume Type	Northbound Left	Thru	Right	Southbound Left	Thru	Right	Eastbound Left	Thru	Right	Westbound Left	Thru	Right	Total Volume
#104 Antelope Road & Keller Road													
Base	623	379	728	79	78	484	722	807	227	186	426	109	4848
Added	0	0	0	0	0	0	0	0	0	0	0	0	0
Total	623	379	728	79	78	484	722	807	227	186	426	109	4848
#105 Menifee Road - Meadowlark Road & Keller Road													
Base	63	775	543	126	819	293	783	295	361	202	300	184	4744
Added	0	0	0	0	0	0	0	0	0	0	0	0	0
Total	63	775	543	126	819	293	783	295	361	202	300	184	4744
#107 Leon Road & Keller Road													
Base	66	837	0	0	609	76	80	19	270	15	181	3	2156
Added	0	0	0	0	0	0	0	0	0	0	0	0	0
Total	66	837	0	0	609	76	80	19	270	15	181	3	2156
#108 Winchester Road - SR-79 & Keller Road													
Base	0	2596	37	12	2148	1	0	20	1	13	13	30	4871
Added	0	0	0	0	0	0	0	0	0	0	0	0	0
Total	0	2596	37	12	2148	1	0	20	1	13	13	30	4871
#112 Leon Road & Jean Nicholas													
Base	3	524	233	236	556	12	2	103	13	117	144	368	2311
Added	0	0	0	0	0	0	0	0	0	0	0	0	0
Total	3	524	233	236	556	12	2	103	13	117	144	368	2311
#122 Meadowlark Lane - Whitewood Road & Clinton Keith Road													
Base	596	207	691	495	226	321	162	1279	379	430	768	869	6423
Added	0	0	0	0	0	0	0	0	0	0	0	0	0
Total	596	207	691	495	226	321	162	1279	379	430	768	869	6423
#138 Jefferson Avenue & Cherry Street													
Base	33	1291	786	145	783	5	2	1002	47	127	785	616	5622
Added	0	0	0	0	0	0	0	0	0	0	0	0	0
Total	33	1291	786	145	783	5	2	1002	47	127	785	616	5622
#141 Jefferson Ave & Nutmeg St													
Base	635	1173	348	91	1196	94	64	133	293	259	181	112	4579
Added	0	0	0	0	0	0	0	0	0	0	0	0	0
Total	635	1173	348	91	1196	94	64	133	293	259	181	112	4579
#142 Jefferson Ave & Magnolia St													
Base	131	2054	12	9	1643	93	123	4	49	7	4	13	4142
Added	0	0	0	0	0	0	0	0	0	0	0	0	0
Total	131	2054	12	9	1643	93	123	4	49	7	4	13	4142

City of Murrieta General Plan
Existing General Plan
PM Peak Hour

Volume Type	Northbound Left	Thru	Right	Southbound Left	Thru	Right	Eastbound Left	Thru	Right	Westbound Left	Thru	Right	Total Volume
#149 Monroe Ave & Murrieta Hot Springs Rd													
Base	165	260	195	1	262	131	186	2601	135	34	2056	31	6057
Added	0	0	0	0	0	0	0	0	0	0	0	0	0
Total	165	260	195	1	262	131	186	2601	135	34	2056	31	6057
#158 Adams Ave & Guava St													
Base	31	181	21	70	19	178	72	275	134	5	262	158	1406
Added	0	0	0	0	0	0	0	0	0	0	0	0	0
Total	31	181	21	70	19	178	72	275	134	5	262	158	1406

City of Murrieta General Plan
Existing General Plan
PM Peak Hour

Impact Analysis Report
Level Of Service

Intersection	Base LOS	Base Del/ Veh	Base V/ C	Future LOS	Future Del/ Veh	Future V/ C	Change in
# 1 Menifee Road & Scott Road	E	72.8	1.146	E	72.8	1.146	+ 0.000 D/V
# 3 Winchester Road/SR-79 & Scott	F	287.5	1.886	F	287.5	1.886	+ 0.000 D/V
# 6 Briggs Road & Keller Road	B	19.0	0.604	B	19.0	0.604	+ 0.000 D/V
# 9 Antelope Road & Golden City Dr	D	39.2	1.106	D	39.2	1.106	+ 0.000 D/V
# 10 Whitewood Roa - /Meadowlark Ro	E	65.7	1.147	E	65.7	1.147	+ 0.000 D/V
# 11 Briggs Road & Baxter Road - Je	B	10.5	0.222	B	10.5	0.222	+ 0.000 D/V
# 13 Winchester Road - SR-79 & Nich	C	24.6	0.846	C	24.6	0.846	+ 0.000 D/V
# 14 Antelope Road & Linnel Lane Ex	C	22.1	0.584	C	22.1	0.584	+ 0.000 D/V
# 15 Whitewood Road - Meadowlark Ro	B	15.8	0.638	B	15.8	0.638	+ 0.000 D/V
# 16 Leon Road & Max Gillis Road	C	32.8	0.768	C	32.8	0.768	+ 0.000 D/V
# 17 Winchester Road - SR-79 & Max	D	35.3	0.950	D	35.3	0.950	+ 0.000 D/V
# 18 California Oaks Road & Clinton	C	20.6	0.886	C	20.6	0.886	+ 0.000 D/V
# 19 I-215 SB Off-Ramp & Clinton Ke	B	12.2	0.680	B	12.2	0.680	+ 0.000 D/V
# 20 I-215 NB Off Ramp & Clinton Ke	B	13.4	0.712	B	13.4	0.712	+ 0.000 D/V
# 21 Antelope Road & Clinton Keith	A	2.7	0.422	A	2.7	0.422	+ 0.000 D/V
# 23 Liberty Road & Clinton Keith R	A	6.2	0.567	A	6.2	0.567	+ 0.000 D/V
# 24 Leon Road & Clinton Keith Road	C	20.7	0.879	C	20.7	0.879	+ 0.000 D/V
# 25 Winchester Road - SR-79 & Bent	E	63.2	1.089	E	63.2	1.089	+ 0.000 D/V
# 26 Winchester Road - SR-79 & Via	C	27.7	0.982	C	27.7	0.982	+ 0.000 D/V
# 27 Monroe Ave & Los Alamos	C	28.0	0.800	C	28.0	0.800	+ 0.000 D/V
# 28 Jefferson Avenue & Murrieta Ho	F	173.6	1.684	F	173.6	1.684	+ 0.000 D/V
# 29 Madison Avenue & Murrieta Hot	F	128.8	1.340	F	128.8	1.340	+ 0.000 D/V
# 30 I-15 SB Off-Ramp & Murrieta Ho	B	14.4	0.744	B	14.4	0.744	+ 0.000 D/V

City of Murrieta General Plan
Existing General Plan
PM Peak Hour

Intersection	Base LOS	Base Del/ Veh	Base V/ C	Future LOS	Future Del/ Veh	Future V/ C	Change in
# 31 I-15 NB Off-Ramp & Murrieta Ho	A	8.2	0.600	A	8.2	0.600	+ 0.000 D/V
# 32 I-215 SB Off-Ramp & Murrieta H	B	10.6	0.817	B	10.6	0.817	+ 0.000 D/V
# 33 I-215 NB Off-Ramp & Murrieta H	A	9.5	0.653	A	9.5	0.653	+ 0.000 D/V
# 34 Jackson Avenue & Murrieta Hot	A	9.1	0.569	A	9.1	0.569	+ 0.000 D/V
# 35 Margarita Road & Murrieta Hot	D	50.5	1.016	D	50.5	1.016	+ 0.000 D/V
# 36 French Valley Parkway & Murrie	B	17.6	0.790	B	17.6	0.790	+ 0.000 D/V
# 37 Jefferson Avenue & Guava Stree	A	7.9	0.759	A	7.9	0.759	+ 0.000 D/V
# 39 Washington Ave & Calle Del Oso	C	27.2	0.522	C	27.2	0.522	+ 0.000 D/V
# 40 Clinton Keith Rd & Calle de Os	B	16.2	0.644	B	16.2	0.644	+ 0.000 D/V
# 43 Jefferson Ave & Lemon St	B	13.7	0.615	B	13.7	0.615	+ 0.000 D/V
# 44 Jefferson Ave & Kalmia St	F	129.1	1.534	F	129.1	1.534	+ 0.000 D/V
# 45 Jefferson Ave & Juniper St	B	15.5	0.781	B	15.5	0.781	+ 0.000 D/V
# 46 Jefferson Ave & Ivy St/Los Ala	C	30.9	0.909	C	30.9	0.909	+ 0.000 D/V
# 48 Madison Ave/I-15 SB Ramps & Ka	C	30.4	0.871	C	30.4	0.871	+ 0.000 D/V
# 50 Hancock Ave & Murrieta Hot Spr	B	19.0	0.850	B	19.0	0.850	+ 0.000 D/V
# 51 Alta Murrieta Dr & Murrieta Ho	D	53.7	1.024	D	53.7	1.024	+ 0.000 D/V
# 52 Winchester Road - SR-79 & Murr	F	91.7	1.314	F	91.7	1.314	+ 0.000 D/V
# 53 Hancock Ave & Los Alamos Rd	F	224.1	1.622	F	224.1	1.622	+ 0.000 D/V
# 54 I-215 SB Ramps & Los Alamos Rd	F	145.6	1.394	F	145.6	1.394	+ 0.000 D/V
# 55 I-215 NB Ramps & Los Alamos Rd	C	23.1	0.897	C	23.1	0.897	+ 0.000 D/V
# 56 Whitewood Rd & Los Alamos Rd	C	29.5	0.789	C	29.5	0.789	+ 0.000 D/V
# 57 Whitewood Rd & Murrieta Hot Sp	E	67.7	1.094	E	67.7	1.094	+ 0.000 D/V
# 59 Nutmeg St & Clinton Keith Rd	D	51.6	1.029	D	51.6	1.029	+ 0.000 D/V
# 60 Murrieta Oaks Ave-Mitchell Rd	C	26.2	0.930	C	26.2	0.930	+ 0.000 D/V
# 61 I-215 SB Ramps & Scott Rd	A	8.4	0.385	A	8.4	0.385	+ 0.000 D/V

City of Murrieta General Plan
Existing General Plan
PM Peak Hour

Intersection	Base LOS	Base Del/ Veh	Base V/ C	Future LOS	Future Del/ Veh	Future V/ C	Change in
# 62 I-215 NB Ramps & Scott Rd	B	16.2	0.509	B	16.2	0.509	+ 0.000 D/V
#102 Leon Road & Scott Road	D	45.9	0.958	D	45.9	0.958	+ 0.000 D/V
#104 Antelope Road & Keller Road	D	35.1	0.783	D	35.1	0.783	+ 0.000 D/V
#105 Menifee Road - Meadowlark Road	C	33.1	0.825	C	33.1	0.825	+ 0.000 D/V
#107 Leon Road & Keller Road	B	16.0	0.325	B	16.0	0.325	+ 0.000 D/V
#108 Winchester Road - SR-79 & Kell	A	1.2	0.534	A	1.2	0.534	+ 0.000 D/V
#112 Leon Road & Jean Nicholas	C	23.3	0.580	C	23.3	0.580	+ 0.000 D/V
#122 Meadowlark Lane - Whitewood Ro	E	62.9	1.154	E	62.9	1.154	+ 0.000 D/V
#138 Jefferson Avenue & Cherry Stre	C	30.7	0.950	C	30.7	0.950	+ 0.000 D/V
#141 Jefferson Ave & Nutmeg St	D	37.6	0.928	D	37.6	0.928	+ 0.000 D/V
#142 Jefferson Ave & Magnolia St	A	7.8	0.488	A	7.8	0.488	+ 0.000 D/V
#149 Monroe Ave & Murrieta Hot Spri	B	16.4	0.569	B	16.4	0.569	+ 0.000 D/V
#158 Adams Ave & Guava St	B	13.3	0.348	B	13.3	0.348	+ 0.000 D/V

City of Murrieta General Plan
Existing General Plan
PM Peak Hour

Level Of Service Computation Report
2000 HCM Operations Method (Future Volume Alternative)

Intersection #1 Menifee Road & Scott Road

Cycle (sec): 100 Critical Vol./Cap.(X): 1.146
Loss Time (sec): 0 (Y+R=4.0 sec) Average Delay (sec/veh): 72.8
Optimal Cycle: 180 Level Of Service: E

Street Name:	Menifee Rd						Scott Rd					
Approach:	North Bound			South Bound			East Bound			West Bound		
Movement:	L -	T -	R	L -	T -	R	L -	T -	R	L -	T -	R
Control:	Protected			Protected			Protected			Protected		
Rights:	Include			Include			Include			Include		
Min. Green:	0	0	0	0	0	0	0	0	0	0	0	0
Lanes:	1 0	1	1 0	1 0	1	1 0	1 0	2	1 0	1 0	2	1 0
Volume Module:												
Base Vol:	266	573	803	183	308	90	219	850	466	491	555	538
Growth Adj:	1.00	1.00	1.00	1.00	1.00	1.00	1.00	1.00	1.00	1.00	1.00	1.00
Initial Bse:	266	573	803	183	308	90	219	850	466	491	555	538
Added Vol:	0	0	0	0	0	0	0	0	0	0	0	0
PasserByVol:	0	0	0	0	0	0	0	0	0	0	0	0
Initial Fut:	266	573	803	183	308	90	219	850	466	491	555	538
User Adj:	1.00	1.00	1.00	1.00	1.00	1.00	1.00	1.00	1.00	1.00	1.00	1.00
PHF Adj:	1.00	1.00	1.00	1.00	1.00	1.00	1.00	1.00	1.00	1.00	1.00	1.00
PHF Volume:	266	573	803	183	308	90	219	850	466	491	555	538
Reduct Vol:	0	0	0	0	0	0	0	0	0	0	0	0
Reduced Vol:	266	573	803	183	308	90	219	850	466	491	555	538
PCE Adj:	1.00	1.00	1.00	1.00	1.00	1.00	1.00	1.00	1.00	1.00	1.00	1.00
MLF Adj:	1.00	1.00	1.00	1.00	1.00	1.00	1.00	1.00	1.00	1.00	1.00	1.00
FinalVolume:	266	573	803	183	308	90	219	850	466	491	555	538
Saturation Flow Module:												
Sat/Lane:	1900	1900	1900	1900	1900	1900	1900	1900	1900	1900	1900	1900
Adjustment:	0.95	0.87	0.87	0.95	0.92	0.92	0.95	0.86	0.86	0.95	0.84	0.84
Lanes:	1.00	1.00	1.00	1.00	1.55	0.45	1.00	2.00	1.00	1.00	2.00	1.00
Final Sat.:	1805	1646	1646	1805	2699	789	1805	3275	1637	1805	3202	1601
Capacity Analysis Module:												
Vol/Sat:	0.15	0.35	0.49	0.10	0.11	0.11	0.12	0.26	0.28	0.27	0.17	0.34
Crit Moves:			****	****					****	****		
Green/Cycle:	0.29	0.43	0.43	0.09	0.22	0.22	0.13	0.25	0.25	0.24	0.36	0.36
Volume/Cap:	0.51	0.82	1.15	1.15	0.51	0.51	0.94	1.05	1.15	1.15	0.49	0.94
Delay/Veh:	30.4	28.6	104.5	161.4	34.5	34.5	86.1	75.5	113.8	127.9	25.2	45.7
User DelAdj:	1.00	1.00	1.00	1.00	1.00	1.00	1.00	1.00	1.00	1.00	1.00	1.00
AdjDel/Veh:	30.4	28.6	104.5	161.4	34.5	34.5	86.1	75.5	113.8	127.9	25.2	45.7
LOS by Move:	C	C	F	F	C	C	F	E	F	F	C	D
HCM2kAvgQ:	7	18	42	12	6	6	10	22	27	26	8	23

Note: Queue reported is the number of cars per lane.

City of Murrieta General Plan
Existing General Plan
PM Peak Hour

Level Of Service Computation Report
2000 HCM Operations Method (Future Volume Alternative)

Intersection #3 Winchester Road/SR-79 & Scott Road

Cycle (sec): 100 Critical Vol./Cap.(X): 1.886
Loss Time (sec): 0 (Y+R=4.0 sec) Average Delay (sec/veh): 287.5
Optimal Cycle: 180 Level Of Service: F

Street Name:	Winchester Road/SR-79						Scott Road					
Approach:	North Bound			South Bound			East Bound			West Bound		
Movement:	L - T - R			L - T - R			L - T - R			L - T - R		
Control:	Protected			Protected			Protected			Protected		
Rights:	Include			Include			Include			Include		
Min. Green:	0	0	0	0	0	0	0	0	0	0	0	0
Lanes:	1 0	2 1	0	1 0	2 1	0	1 0	2 1	0	1 0	2 1	0
Volume Module:												
Base Vol:	120	2428	27	1146	1909	132	110	269	111	0	219	1083
Growth Adj:	1.00	1.00	1.00	1.00	1.00	1.00	1.00	1.00	1.00	1.00	1.00	1.00
Initial Bse:	120	2428	27	1146	1909	132	110	269	111	0	219	1083
Added Vol:	0	0	0	0	0	0	0	0	0	0	0	0
PasserByVol:	0	0	0	0	0	0	0	0	0	0	0	0
Initial Fut:	120	2428	27	1146	1909	132	110	269	111	0	219	1083
User Adj:	1.00	1.00	1.00	1.00	1.00	1.00	1.00	1.00	1.00	1.00	1.00	1.00
PHF Adj:	1.00	1.00	1.00	1.00	1.00	1.00	1.00	1.00	1.00	1.00	1.00	1.00
PHF Volume:	120	2428	27	1146	1909	132	110	269	111	0	219	1083
Reduct Vol:	0	0	0	0	0	0	0	0	0	0	0	0
Reduced Vol:	120	2428	27	1146	1909	132	110	269	111	0	219	1083
PCE Adj:	1.00	1.00	1.00	1.00	1.00	1.00	1.00	1.00	1.00	1.00	1.00	1.00
MLF Adj:	1.00	1.00	1.00	1.00	1.00	1.00	1.00	1.00	1.00	1.00	1.00	1.00
FinalVolume:	120	2428	27	1146	1909	132	110	269	111	0	219	1083
Saturation Flow Module:												
Sat/Lane:	1900	1900	1900	1900	1900	1900	1900	1900	1900	1900	1900	1900
Adjustment:	0.95	0.91	0.91	0.95	0.90	0.90	0.95	0.87	0.87	1.00	0.80	0.80
Lanes:	1.00	2.97	0.03	1.00	2.81	0.19	1.00	2.12	0.88	1.00	2.00	1.00
Final Sat.:	1805	5120	57	1805	4803	332	1805	3510	1448	1900	3026	1513
Capacity Analysis Module:												
Vol/Sat:	0.07	0.47	0.47	0.63	0.40	0.40	0.06	0.08	0.08	0.00	0.07	0.72
Crit Moves:		****		****			****					****
Green/Cycle:	0.08	0.25	0.25	0.34	0.50	0.50	0.03	0.41	0.41	0.00	0.38	0.38
Volume/Cap:	0.79	1.89	1.89	1.89	0.79	0.79	1.89	0.19	0.19	0.00	0.19	1.89
Delay/Veh:	68.5	439	439.0	438.1	22.1	22.1	504.5	18.8	18.8	0.0	20.8	435.2
User DelAdj:	1.00	1.00	1.00	1.00	1.00	1.00	1.00	1.00	1.00	1.00	1.00	1.00
AdjDel/Veh:	68.5	439	439.0	438.1	22.1	22.1	504.5	18.8	18.8	0.0	20.8	435.2
LOS by Move:	E	F	F	F	C	C	F	B	B	A	C	F
HCM2kAvgQ:	6	80	80	101	20	20	11	3	3	0	2	105

Note: Queue reported is the number of cars per lane.

City of Murrieta General Plan
Existing General Plan
PM Peak Hour

Level Of Service Computation Report
2000 HCM Operations Method (Future Volume Alternative)

Intersection #6 Briggs Road & Keller Road

Cycle (sec): 100 Critical Vol./Cap.(X): 0.604
Loss Time (sec): 0 (Y+R=4.0 sec) Average Delay (sec/veh): 19.0
Optimal Cycle: 58 Level Of Service: B

Street Name:	Briggs Road						Keller Road					
Approach:	North Bound			South Bound			East Bound			West Bound		
Movement:	L - T - R			L - T - R			L - T - R			L - T - R		
Control:	Protected			Protected			Protected			Protected		
Rights:	Include			Include			Include			Include		
Min. Green:	0	0	0	0	0	0	0	0	0	0	0	0
Lanes:	1 0	1 1	0	1 0	1 1	0	1 0	1 1	0	1 0	1 1	0
Volume Module:												
Base Vol:	310	85	102	1	51	83	11	261	609	9	283	4
Growth Adj:	1.00	1.00	1.00	1.00	1.00	1.00	1.00	1.00	1.00	1.00	1.00	1.00
Initial Bse:	310	85	102	1	51	83	11	261	609	9	283	4
Added Vol:	0	0	0	0	0	0	0	0	0	0	0	0
PasserByVol:	0	0	0	0	0	0	0	0	0	0	0	0
Initial Fut:	310	85	102	1	51	83	11	261	609	9	283	4
User Adj:	1.00	1.00	1.00	1.00	1.00	1.00	1.00	1.00	1.00	1.00	1.00	1.00
PHF Adj:	1.00	1.00	1.00	1.00	1.00	1.00	1.00	1.00	1.00	1.00	1.00	1.00
PHF Volume:	310	85	102	1	51	83	11	261	609	9	283	4
Reduct Vol:	0	0	0	0	0	0	0	0	0	0	0	0
Reduced Vol:	310	85	102	1	51	83	11	261	609	9	283	4
PCE Adj:	1.00	1.00	1.00	1.00	1.00	1.00	1.00	1.00	1.00	1.00	1.00	1.00
MLF Adj:	1.00	1.00	1.00	1.00	1.00	1.00	1.00	1.00	1.00	1.00	1.00	1.00
FinalVolume:	310	85	102	1	51	83	11	261	609	9	283	4
Saturation Flow Module:												
Sat/Lane:	1900	1900	1900	1900	1900	1900	1900	1900	1900	1900	1900	1900
Adjustment:	0.95	0.87	0.87	0.95	0.86	0.86	0.95	0.85	0.85	0.95	0.95	0.95
Lanes:	1.00	1.00	1.00	1.00	1.00	1.00	1.00	1.00	1.00	1.00	1.97	0.03
Final Sat.:	1805	1657	1657	1805	1637	1637	1805	1615	1615	1805	3553	50
Capacity Analysis Module:												
Vol/Sat:	0.17	0.05	0.06	0.00	0.03	0.05	0.01	0.16	0.38	0.00	0.08	0.08
Crit Moves:	****					****			****	****		
Green/Cycle:	0.28	0.36	0.36	0.00	0.08	0.08	0.04	0.62	0.62	0.01	0.59	0.59
Volume/Cap:	0.60	0.14	0.17	0.17	0.37	0.60	0.14	0.26	0.60	0.60	0.14	0.14
Delay/Veh:	33.0	21.3	21.6	62.8	44.0	48.9	46.7	8.5	12.1	104.1	9.3	9.3
User DelAdj:	1.00	1.00	1.00	1.00	1.00	1.00	1.00	1.00	1.00	1.00	1.00	1.00
AdjDel/Veh:	33.0	21.3	21.6	62.8	44.0	48.9	46.7	8.5	12.1	104.1	9.3	9.3
LOS by Move:	C	C	C	E	D	D	D	A	B	F	A	A
HCM2kAvgQ:	9	2	2	0	2	4	0	4	12	1	2	2

Note: Queue reported is the number of cars per lane.

City of Murrieta General Plan
Existing General Plan
PM Peak Hour

Level Of Service Computation Report
2000 HCM Operations Method (Future Volume Alternative)

Intersection #9 Antelope Road & Golden City Drive - Baxter Road

Cycle (sec): 100 Critical Vol./Cap.(X): 1.106
Loss Time (sec): 0 (Y+R=4.0 sec) Average Delay (sec/veh): 39.2
Optimal Cycle: 180 Level Of Service: D

Street Name:	Antelope Road						Golden City Drive - Baxter Road					
Approach:	North Bound			South Bound			East Bound			West Bound		
Movement:	L -	T -	R	L -	T -	R	L -	T -	R	L -	T -	R
Control:	Permitted			Permitted			Permitted			Permitted		
Rights:	Include			Include			Include			Include		
Min. Green:	0	0	0	0	0	0	0	0	0	0	0	0
Lanes:	1 0	1	1 0	1 0	1	1 0	1 0	1	1 0	1 0	1	1 0
Volume Module:												
Base Vol:	2	286	800	230	831	14	3	182	33	279	92	691
Growth Adj:	1.00	1.00	1.00	1.00	1.00	1.00	1.00	1.00	1.00	1.00	1.00	1.00
Initial Bse:	2	286	800	230	831	14	3	182	33	279	92	691
Added Vol:	0	0	0	0	0	0	0	0	0	0	0	0
PasserByVol:	0	0	0	0	0	0	0	0	0	0	0	0
Initial Fut:	2	286	800	230	831	14	3	182	33	279	92	691
User Adj:	1.00	1.00	1.00	1.00	1.00	1.00	1.00	1.00	1.00	1.00	1.00	1.00
PHF Adj:	1.00	1.00	1.00	1.00	1.00	1.00	1.00	1.00	1.00	1.00	1.00	1.00
PHF Volume:	2	286	800	230	831	14	3	182	33	279	92	691
Reduct Vol:	0	0	0	0	0	0	0	0	0	0	0	0
Reduced Vol:	2	286	800	230	831	14	3	182	33	279	92	691
PCE Adj:	1.00	1.00	1.00	1.00	1.00	1.00	1.00	1.00	1.00	1.00	1.00	1.00
MLF Adj:	1.00	1.00	1.00	1.00	1.00	1.00	1.00	1.00	1.00	1.00	1.00	1.00
FinalVolume:	2	286	800	230	831	14	3	182	33	279	92	691
Saturation Flow Module:												
Sat/Lane:	1900	1900	1900	1900	1900	1900	1900	1900	1900	1900	1900	1900
Adjustment:	0.26	0.84	0.84	0.18	0.95	0.95	0.19	0.93	0.93	0.55	0.82	0.82
Lanes:	1.00	1.00	1.00	1.00	1.97	0.03	1.00	1.69	0.31	1.00	1.00	1.00
Final Sat.:	492	1605	1605	346	3540	60	367	2986	541	1041	1567	1567
Capacity Analysis Module:												
Vol/Sat:	0.00	0.18	0.50	0.67	0.23	0.23	0.01	0.06	0.06	0.27	0.06	0.44
Crit Moves:				****								****
Green/Cycle:	0.60	0.60	0.60	0.60	0.60	0.60	0.40	0.40	0.40	0.40	0.40	0.40
Volume/Cap:	0.01	0.30	0.83	1.11	0.39	0.39	0.02	0.15	0.15	0.67	0.15	1.11
Delay/Veh:	8.0	9.7	20.4	113.7	10.5	10.5	18.3	19.3	19.3	29.0	19.2	96.8
User DelAdj:	1.00	1.00	1.00	1.00	1.00	1.00	1.00	1.00	1.00	1.00	1.00	1.00
AdjDel/Veh:	8.0	9.7	20.4	113.7	10.5	10.5	18.3	19.3	19.3	29.0	19.2	96.8
LOS by Move:	A	A	C	F	B	B	B	B	B	C	B	F
HCM2kAvgQ:	0	4	23	13	7	7	0	2	2	8	2	35

Note: Queue reported is the number of cars per lane.

City of Murrieta General Plan
Existing General Plan
PM Peak Hour

Level Of Service Computation Report
2000 HCM Operations Method (Future Volume Alternative)

Intersection #10 Whitewood Roa - /Meadowlark Road & Golden City Drive - Baxter R

Cycle (sec): 100 Critical Vol./Cap.(X): 1.147
Loss Time (sec): 0 (Y+R=4.0 sec) Average Delay (sec/veh): 65.7
Optimal Cycle: 180 Level Of Service: E

Street Name:	Whitewood Road - Meadowlark Road						Golden City Drive - Baxter Road					
Approach:	North Bound			South Bound			East Bound			West Bound		
Movement:	L -	T -	R	L -	T -	R	L -	T -	R	L -	T -	R
Control:	Protected			Protected			Protected			Protected		
Rights:	Include			Include			Include			Include		
Min. Green:	0	0	0	0	0	0	0	0	0	0	0	0
Lanes:	1 0	1	1 0	1 0	1	1 0	1 0	1	1 0	1 0	1	1 0
Volume Module:												
Base Vol:	208	1107	3	0	538	762	263	12	875	0	7	2
Growth Adj:	1.00	1.00	1.00	1.00	1.00	1.00	1.00	1.00	1.00	1.00	1.00	1.00
Initial Bse:	208	1107	3	0	538	762	263	12	875	0	7	2
Added Vol:	0	0	0	0	0	0	0	0	0	0	0	0
PasserByVol:	0	0	0	0	0	0	0	0	0	0	0	0
Initial Fut:	208	1107	3	0	538	762	263	12	875	0	7	2
User Adj:	1.00	1.00	1.00	1.00	1.00	1.00	1.00	1.00	1.00	1.00	1.00	1.00
PHF Adj:	1.00	1.00	1.00	1.00	1.00	1.00	1.00	1.00	1.00	1.00	1.00	1.00
PHF Volume:	208	1107	3	0	538	762	263	12	875	0	7	2
Reduct Vol:	0	0	0	0	0	0	0	0	0	0	0	0
Reduced Vol:	208	1107	3	0	538	762	263	12	875	0	7	2
PCE Adj:	1.00	1.00	1.00	1.00	1.00	1.00	1.00	1.00	1.00	1.00	1.00	1.00
MLF Adj:	1.00	1.00	1.00	1.00	1.00	1.00	1.00	1.00	1.00	1.00	1.00	1.00
FinalVolume:	208	1107	3	0	538	762	263	12	875	0	7	2
Saturation Flow Module:												
Sat/Lane:	1900	1900	1900	1900	1900	1900	1900	1900	1900	1900	1900	1900
Adjustment:	0.95	0.95	0.95	1.00	0.87	0.87	0.95	0.81	0.81	1.00	0.92	0.92
Lanes:	1.00	1.99	0.01	1.00	1.00	1.00	1.00	1.00	1.00	1.00	1.56	0.44
Final Sat.:	1805	3600	10	1900	1646	1646	1805	1538	1538	1900	2715	776
Capacity Analysis Module:												
Vol/Sat:	0.12	0.31	0.31	0.00	0.33	0.46	0.15	0.01	0.57	0.00	0.00	0.00
Crit Moves:	****					****			****	****		
Green/Cycle:	0.10	0.50	0.50	0.00	0.40	0.40	0.49	0.50	0.50	0.00	0.01	0.01
Volume/Cap:	1.15	0.61	0.61	0.00	0.81	1.15	0.30	0.02	1.15	0.00	0.30	0.30
Delay/Veh:	156.9	18.4	18.4	0.0	29.6	106.7	15.6	12.8	106.2	0.0	54.8	54.8
User DelAdj:	1.00	1.00	1.00	1.00	1.00	1.00	1.00	1.00	1.00	1.00	1.00	1.00
AdjDel/Veh:	156.9	18.4	18.4	0.0	29.6	106.7	15.6	12.8	106.2	0.0	54.8	54.8
LOS by Move:	F	B	B	A	C	F	B	B	F	A	D	D
HCM2kAvgQ:	13	13	13	0	17	41	5	0	46	0	0	0

Note: Queue reported is the number of cars per lane.

City of Murrieta General Plan
Existing General Plan
PM Peak Hour

Level Of Service Computation Report
2000 HCM Operations Method (Future Volume Alternative)

Intersection #11 Briggs Road & Baxter Road - Jean Nicholas

Cycle (sec): 100 Critical Vol./Cap.(X): 0.222
Loss Time (sec): 0 (Y+R=4.0 sec) Average Delay (sec/veh): 10.5
Optimal Cycle: 29 Level Of Service: B

Street Name:	Briggs Road						Baxter Road - Jean Nicholas					
Approach:	North Bound			South Bound			East Bound			West Bound		
Movement:	L -	T -	R	L -	T -	R	L -	T -	R	L -	T -	R
Control:	Protected			Protected			Protected			Protected		
Rights:	Include			Include			Include			Include		
Min. Green:	0	0	0	0	0	0	0	0	0	0	0	0
Lanes:	0 0	1 1	0	1 0	2 0	0	0 0	0 0	0	1 0	0 0	1
Volume Module:												
Base Vol:	0	384	85	34	525	0	0	0	0	16	0	113
Growth Adj:	1.00	1.00	1.00	1.00	1.00	1.00	1.00	1.00	1.00	1.00	1.00	1.00
Initial Bse:	0	384	85	34	525	0	0	0	0	16	0	113
Added Vol:	0	0	0	0	0	0	0	0	0	0	0	0
PasserByVol:	0	0	0	0	0	0	0	0	0	0	0	0
Initial Fut:	0	384	85	34	525	0	0	0	0	16	0	113
User Adj:	1.00	1.00	1.00	1.00	1.00	1.00	1.00	1.00	1.00	1.00	1.00	1.00
PHF Adj:	1.00	1.00	1.00	1.00	1.00	1.00	1.00	1.00	1.00	1.00	1.00	1.00
PHF Volume:	0	384	85	34	525	0	0	0	0	16	0	113
Reduct Vol:	0	0	0	0	0	0	0	0	0	0	0	0
Reduced Vol:	0	384	85	34	525	0	0	0	0	16	0	113
PCE Adj:	1.00	1.00	1.00	1.00	1.00	1.00	1.00	1.00	1.00	1.00	1.00	1.00
MLF Adj:	1.00	1.00	1.00	1.00	1.00	1.00	1.00	1.00	1.00	1.00	1.00	1.00
FinalVolume:	0	384	85	34	525	0	0	0	0	16	0	113
Saturation Flow Module:												
Sat/Lane:	1900	1900	1900	1900	1900	1900	1900	1900	1900	1900	1900	1900
Adjustment:	1.00	0.92	0.92	0.95	0.95	1.00	1.00	1.00	1.00	0.95	1.00	0.85
Lanes:	0.00	1.64	0.36	1.00	2.00	0.00	0.00	0.00	0.00	1.00	0.00	1.00
Final Sat.:	0	2876	637	1805	3610	0	0	0	0	1805	0	1615
Capacity Analysis Module:												
Vol/Sat:	0.00	0.13	0.13	0.02	0.15	0.00	0.00	0.00	0.00	0.01	0.00	0.07
Crit Moves:		****		****								****
Green/Cycle:	0.00	0.60	0.60	0.08	0.69	0.00	0.00	0.00	0.00	0.31	0.00	0.31
Volume/Cap:	0.00	0.22	0.22	0.22	0.21	0.00	0.00	0.00	0.00	0.03	0.00	0.22
Delay/Veh:	0.0	9.3	9.3	43.4	5.8	0.0	0.0	0.0	0.0	23.7	0.0	25.5
User DelAdj:	1.00	1.00	1.00	1.00	1.00	1.00	1.00	1.00	1.00	1.00	1.00	1.00
AdjDel/Veh:	0.0	9.3	9.3	43.4	5.8	0.0	0.0	0.0	0.0	23.7	0.0	25.5
LOS by Move:	A	A	A	D	A	A	A	A	A	C	A	C
HCM2kAvgQ:	0	3	3	1	3	0	0	0	0	0	0	3

Note: Queue reported is the number of cars per lane.

City of Murrieta General Plan
Existing General Plan
PM Peak Hour

Level Of Service Computation Report
2000 HCM Operations Method (Future Volume Alternative)

Intersection #13 Winchester Road - SR-79 & Nicholas - Skyview

Cycle (sec): 100 Critical Vol./Cap.(X): 0.846
Loss Time (sec): 0 (Y+R=4.0 sec) Average Delay (sec/veh): 24.6
Optimal Cycle: 148 Level Of Service: C

Street Name:	Winchester Road - SR-79						Nicholas - Skyview					
Approach:	North Bound			South Bound			East Bound			West Bound		
Movement:	L -	T -	R	L -	T -	R	L -	T -	R	L -	T -	R
Control:	Protected			Protected			Protected			Protected		
Rights:	Include			Include			Include			Include		
Min. Green:	0	0	0	0	0	0	0	0	0	0	0	0
Lanes:	1 0	2 1	0	1 0	2 1	0	1 0	1 1	0	1 0	1 1	0
Volume Module:												
Base Vol:	207	2617	191	66	1966	17	33	538	112	141	415	110
Growth Adj:	1.00	1.00	1.00	1.00	1.00	1.00	1.00	1.00	1.00	1.00	1.00	1.00
Initial Bse:	207	2617	191	66	1966	17	33	538	112	141	415	110
Added Vol:	0	0	0	0	0	0	0	0	0	0	0	0
PasserByVol:	0	0	0	0	0	0	0	0	0	0	0	0
Initial Fut:	207	2617	191	66	1966	17	33	538	112	141	415	110
User Adj:	1.00	1.00	1.00	1.00	1.00	1.00	1.00	1.00	1.00	1.00	1.00	1.00
PHF Adj:	1.00	1.00	1.00	1.00	1.00	1.00	1.00	1.00	1.00	1.00	1.00	1.00
PHF Volume:	207	2617	191	66	1966	17	33	538	112	141	415	110
Reduct Vol:	0	0	0	0	0	0	0	0	0	0	0	0
Reduced Vol:	207	2617	191	66	1966	17	33	538	112	141	415	110
PCE Adj:	1.00	1.00	1.00	1.00	1.00	1.00	1.00	1.00	1.00	1.00	1.00	1.00
MLF Adj:	1.00	1.00	1.00	1.00	1.00	1.00	1.00	1.00	1.00	1.00	1.00	1.00
FinalVolume:	207	2617	191	66	1966	17	33	538	112	141	415	110
Saturation Flow Module:												
Sat/Lane:	1900	1900	1900	1900	1900	1900	1900	1900	1900	1900	1900	1900
Adjustment:	0.95	0.90	0.90	0.95	0.91	0.91	0.95	0.93	0.93	0.95	0.92	0.92
Lanes:	1.00	2.80	0.20	1.00	2.97	0.03	1.00	1.66	0.34	1.00	1.58	0.42
Final Sat.:	1805	4786	349	1805	5137	44	1805	2910	606	1805	2765	733
Capacity Analysis Module:												
Vol/Sat:	0.11	0.55	0.55	0.04	0.38	0.38	0.02	0.18	0.18	0.08	0.15	0.15
Crit Moves:		****		****				****		****		
Green/Cycle:	0.16	0.65	0.65	0.04	0.53	0.53	0.03	0.22	0.22	0.09	0.28	0.28
Volume/Cap:	0.72	0.85	0.85	0.85	0.72	0.72	0.54	0.85	0.85	0.85	0.54	0.54
Delay/Veh:	48.6	16.0	16.0	101.4	18.8	18.8	57.1	46.1	46.1	75.7	31.4	31.4
User DelAdj:	1.00	1.00	1.00	1.00	1.00	1.00	1.00	1.00	1.00	1.00	1.00	1.00
AdjDel/Veh:	48.6	16.0	16.0	101.4	18.8	18.8	57.1	46.1	46.1	75.7	31.4	31.4
LOS by Move:	D	B	B	F	B	B	E	D	D	E	C	C
HCM2kAvgQ:	8	27	27	4	18	18	2	13	13	7	8	8

Note: Queue reported is the number of cars per lane.

City of Murrieta General Plan
Existing General Plan
PM Peak Hour

Level Of Service Computation Report
2000 HCM Operations Method (Future Volume Alternative)

Intersection #14 Antelope Road & Linnel Lane Extension

Cycle (sec): 100 Critical Vol./Cap.(X): 0.584
Loss Time (sec): 0 (Y+R=4.0 sec) Average Delay (sec/veh): 22.1
Optimal Cycle: 55 Level Of Service: C

Street Name:	Antelope Road						Linnel Lane Extension					
Approach:	North Bound			South Bound			East Bound			West Bound		
Movement:	L -	T -	R	L -	T -	R	L -	T -	R	L -	T -	R
Control:	Protected			Protected			Protected			Protected		
Rights:	Include			Include			Include			Include		
Min. Green:	0	0	0	0	0	0	0	0	0	0	0	0
Lanes:	1 0	1	1 0	1 0	1	1 0	1 0	1	1 0	1 0	1	1 0
Volume Module:												
Base Vol:	16	460	75	97	640	519	164	532	175	10	160	231
Growth Adj:	1.00	1.00	1.00	1.00	1.00	1.00	1.00	1.00	1.00	1.00	1.00	1.00
Initial Bse:	16	460	75	97	640	519	164	532	175	10	160	231
Added Vol:	0	0	0	0	0	0	0	0	0	0	0	0
PasserByVol:	0	0	0	0	0	0	0	0	0	0	0	0
Initial Fut:	16	460	75	97	640	519	164	532	175	10	160	231
User Adj:	1.00	1.00	1.00	1.00	1.00	1.00	1.00	1.00	1.00	1.00	1.00	1.00
PHF Adj:	1.00	1.00	1.00	1.00	1.00	1.00	1.00	1.00	1.00	1.00	1.00	1.00
PHF Volume:	16	460	75	97	640	519	164	532	175	10	160	231
Reduct Vol:	0	0	0	0	0	0	0	0	0	0	0	0
Reduced Vol:	16	460	75	97	640	519	164	532	175	10	160	231
PCE Adj:	1.00	1.00	1.00	1.00	1.00	1.00	1.00	1.00	1.00	1.00	1.00	1.00
MLF Adj:	1.00	1.00	1.00	1.00	1.00	1.00	1.00	1.00	1.00	1.00	1.00	1.00
FinalVolume:	16	460	75	97	640	519	164	532	175	10	160	231
Saturation Flow Module:												
Sat/Lane:	1900	1900	1900	1900	1900	1900	1900	1900	1900	1900	1900	1900
Adjustment:	0.95	0.93	0.93	0.95	0.89	0.89	0.95	0.91	0.91	0.95	0.87	0.87
Lanes:	1.00	1.72	0.28	1.00	1.10	0.90	1.00	1.50	0.50	1.00	1.00	1.00
Final Sat.:	1805	3039	495	1805	1860	1508	1805	2616	861	1805	1644	1644
Capacity Analysis Module:												
Vol/Sat:	0.01	0.15	0.15	0.05	0.34	0.34	0.09	0.20	0.20	0.01	0.10	0.14
Crit Moves:	****				****		****					****
Green/Cycle:	0.02	0.45	0.45	0.16	0.59	0.59	0.16	0.39	0.39	0.01	0.24	0.24
Volume/Cap:	0.58	0.34	0.34	0.34	0.58	0.58	0.58	0.53	0.53	0.53	0.40	0.58
Delay/Veh:	77.4	18.2	18.2	38.1	13.3	13.3	42.4	24.1	24.1	74.3	32.2	34.9
User DelAdj:	1.00	1.00	1.00	1.00	1.00	1.00	1.00	1.00	1.00	1.00	1.00	1.00
AdjDel/Veh:	77.4	18.2	18.2	38.1	13.3	13.3	42.4	24.1	24.1	74.3	32.2	34.9
LOS by Move:	E	B	B	D	B	B	D	C	C	E	C	C
HCM2kAvgQ:	1	6	6	3	12	12	6	9	9	1	5	7

Note: Queue reported is the number of cars per lane.

City of Murrieta General Plan
Existing General Plan
PM Peak Hour

Level Of Service Computation Report
2000 HCM Operations Method (Future Volume Alternative)

Intersection #15 Whitewood Road - Meadowlark Road & Linnel Lane Extension

Cycle (sec): 100 Critical Vol./Cap.(X): 0.638
Loss Time (sec): 0 (Y+R=4.0 sec) Average Delay (sec/veh): 15.8
Optimal Cycle: 63 Level Of Service: B

Street Name:	Whitewood Road - Meadowlark Road						Linnel Lane Extension (Future)					
Approach:	North Bound			South Bound			East Bound			West Bound		
Movement:	L -	T -	R	L -	T -	R	L -	T -	R	L -	T -	R
Control:	Protected			Protected			Protected			Protected		
Rights:	Include			Include			Include			Include		
Min. Green:	0	0	0	0	0	0	0	0	0	0	0	0
Lanes:	1 0	1	1 0	1 0	1	1 0	1 0	1	1 0	1 0	1	1 0
Volume Module:												
Base Vol:	13	901	4	5	1049	379	340	29	339	1	8	27
Growth Adj:	1.00	1.00	1.00	1.00	1.00	1.00	1.00	1.00	1.00	1.00	1.00	1.00
Initial Bse:	13	901	4	5	1049	379	340	29	339	1	8	27
Added Vol:	0	0	0	0	0	0	0	0	0	0	0	0
PasserByVol:	0	0	0	0	0	0	0	0	0	0	0	0
Initial Fut:	13	901	4	5	1049	379	340	29	339	1	8	27
User Adj:	1.00	1.00	1.00	1.00	1.00	1.00	1.00	1.00	1.00	1.00	1.00	1.00
PHF Adj:	1.00	1.00	1.00	1.00	1.00	1.00	1.00	1.00	1.00	1.00	1.00	1.00
PHF Volume:	13	901	4	5	1049	379	340	29	339	1	8	27
Reduct Vol:	0	0	0	0	0	0	0	0	0	0	0	0
Reduced Vol:	13	901	4	5	1049	379	340	29	339	1	8	27
PCE Adj:	1.00	1.00	1.00	1.00	1.00	1.00	1.00	1.00	1.00	1.00	1.00	1.00
MLF Adj:	1.00	1.00	1.00	1.00	1.00	1.00	1.00	1.00	1.00	1.00	1.00	1.00
FinalVolume:	13	901	4	5	1049	379	340	29	339	1	8	27
Saturation Flow Module:												
Sat/Lane:	1900	1900	1900	1900	1900	1900	1900	1900	1900	1900	1900	1900
Adjustment:	0.95	0.95	0.95	0.95	0.91	0.91	0.95	0.82	0.82	0.95	0.84	0.84
Lanes:	1.00	1.99	0.01	1.00	1.47	0.53	1.00	1.00	1.00	1.00	1.00	1.00
Final Sat.:	1805	3590	16	1805	2546	920	1805	1556	1556	1805	1596	1596
Capacity Analysis Module:												
Vol/Sat:	0.01	0.25	0.25	0.00	0.41	0.41	0.19	0.02	0.22	0.00	0.01	0.02
Crit Moves:	****				****				****	****		
Green/Cycle:	0.01	0.65	0.65	0.01	0.65	0.65	0.31	0.34	0.34	0.00	0.03	0.03
Volume/Cap:	0.64	0.39	0.39	0.39	0.64	0.64	0.60	0.05	0.64	0.64	0.18	0.60
Delay/Veh:	101.1	8.3	8.3	67.5	11.3	11.3	30.7	22.1	30.1	357.9	47.9	64.1
User DelAdj:	1.00	1.00	1.00	1.00	1.00	1.00	1.00	1.00	1.00	1.00	1.00	1.00
AdjDel/Veh:	101.1	8.3	8.3	67.5	11.3	11.3	30.7	22.1	30.1	357.9	47.9	64.1
LOS by Move:	F	A	A	E	B	B	C	C	C	F	D	E
HCM2kAvgQ:	1	7	7	1	14	14	9	1	10	0	0	2

Note: Queue reported is the number of cars per lane.

City of Murrieta General Plan
Existing General Plan
PM Peak Hour

Level Of Service Computation Report
2000 HCM Operations Method (Future Volume Alternative)

Intersection #16 Leon Road & Max Gillis Road

Cycle (sec): 100 Critical Vol./Cap.(X): 0.768
Loss Time (sec): 0 (Y+R=4.0 sec) Average Delay (sec/veh): 32.8
Optimal Cycle: 98 Level Of Service: C

Street Name:	Leon Road						Max Gillis Road					
Approach:	North Bound			South Bound			East Bound			West Bound		
Movement:	L -	T -	R	L -	T -	R	L -	T -	R	L -	T -	R
Control:	Protected			Protected			Protected			Protected		
Rights:	Include			Include			Include			Include		
Min. Green:	0	0	0	0	0	0	0	0	0	0	0	0
Lanes:	2	0 2	0 1	2	0 1	1 0	2	0 1	1 0	2	0 1	0 1
Volume Module:												
Base Vol:	495	409	485	368	261	148	97	164	373	461	326	359
Growth Adj:	1.00	1.00	1.00	1.00	1.00	1.00	1.00	1.00	1.00	1.00	1.00	1.00
Initial Bse:	495	409	485	368	261	148	97	164	373	461	326	359
Added Vol:	0	0	0	0	0	0	0	0	0	0	0	0
PasserByVol:	0	0	0	0	0	0	0	0	0	0	0	0
Initial Fut:	495	409	485	368	261	148	97	164	373	461	326	359
User Adj:	1.00	1.00	1.00	1.00	1.00	1.00	1.00	1.00	1.00	1.00	1.00	1.00
PHF Adj:	1.00	1.00	1.00	1.00	1.00	1.00	1.00	1.00	1.00	1.00	1.00	1.00
PHF Volume:	495	409	485	368	261	148	97	164	373	461	326	359
Reduct Vol:	0	0	0	0	0	0	0	0	0	0	0	0
Reduced Vol:	495	409	485	368	261	148	97	164	373	461	326	359
PCE Adj:	1.00	1.00	1.00	1.00	1.00	1.00	1.00	1.00	1.00	1.00	1.00	1.00
MLF Adj:	1.00	1.00	1.00	1.00	1.00	1.00	1.00	1.00	1.00	1.00	1.00	1.00
FinalVolume:	495	409	485	368	261	148	97	164	373	461	326	359
Saturation Flow Module:												
Sat/Lane:	1900	1900	1900	1900	1900	1900	1900	1900	1900	1900	1900	1900
Adjustment:	0.92	0.95	0.85	0.92	0.90	0.90	0.92	0.85	0.85	0.92	1.00	0.85
Lanes:	2.00	2.00	1.00	2.00	1.28	0.72	2.00	1.00	1.00	2.00	1.00	1.00
Final Sat.:	3502	3610	1615	3502	2179	1236	3502	1617	1617	3502	1900	1615
Capacity Analysis Module:												
Vol/Sat:	0.14	0.11	0.30	0.11	0.12	0.12	0.03	0.10	0.23	0.13	0.17	0.22
Crit Moves:			****	****					****	****		
Green/Cycle:	0.29	0.39	0.39	0.14	0.24	0.24	0.05	0.30	0.30	0.17	0.42	0.42
Volume/Cap:	0.49	0.29	0.77	0.77	0.49	0.49	0.53	0.34	0.77	0.77	0.41	0.53
Delay/Veh:	30.1	21.0	32.2	49.0	33.1	33.1	49.1	27.4	36.9	45.5	20.7	22.5
User DelAdj:	1.00	1.00	1.00	1.00	1.00	1.00	1.00	1.00	1.00	1.00	1.00	1.00
AdjDel/Veh:	30.1	21.0	32.2	49.0	33.1	33.1	49.1	27.4	36.9	45.5	20.7	22.5
LOS by Move:	C	C	C	D	C	C	D	C	D	D	C	C
HCM2kAvgQ:	7	5	15	8	6	6	2	4	13	9	7	9

Note: Queue reported is the number of cars per lane.

City of Murrieta General Plan
Existing General Plan
PM Peak Hour

Level Of Service Computation Report
2000 HCM Operations Method (Future Volume Alternative)

Intersection #17 Winchester Road - SR-79 & Max Gillis - Thompson

Cycle (sec): 100 Critical Vol./Cap.(X): 0.950
Loss Time (sec): 0 (Y+R=4.0 sec) Average Delay (sec/veh): 35.3
Optimal Cycle: 180 Level Of Service: D

Street Name:	Winchester Road - SR-79						Max Gillis - Thompson					
Approach:	North Bound			South Bound			East Bound			West Bound		
Movement:	L -	T -	R	L -	T -	R	L -	T -	R	L -	T -	R
Control:	Protected			Protected			Protected			Protected		
Rights:	Include			Include			Include			Include		
Min. Green:	0	0	0	0	0	0	0	0	0	0	0	0
Lanes:	1	0 2	1 0	1	0 3	0 1	2	0 2	0 1	1	0 1	1 0
Volume Module:												
Base Vol:	202	2469	88	306	1298	550	651	291	124	37	243	98
Growth Adj:	1.00	1.00	1.00	1.00	1.00	1.00	1.00	1.00	1.00	1.00	1.00	1.00
Initial Bse:	202	2469	88	306	1298	550	651	291	124	37	243	98
Added Vol:	0	0	0	0	0	0	0	0	0	0	0	0
PasserByVol:	0	0	0	0	0	0	0	0	0	0	0	0
Initial Fut:	202	2469	88	306	1298	550	651	291	124	37	243	98
User Adj:	1.00	1.00	1.00	1.00	1.00	1.00	1.00	1.00	1.00	1.00	1.00	1.00
PHF Adj:	1.00	1.00	1.00	1.00	1.00	1.00	1.00	1.00	1.00	1.00	1.00	1.00
PHF Volume:	202	2469	88	306	1298	550	651	291	124	37	243	98
Reduct Vol:	0	0	0	0	0	0	0	0	0	0	0	0
Reduced Vol:	202	2469	88	306	1298	550	651	291	124	37	243	98
PCE Adj:	1.00	1.00	1.00	1.00	1.00	1.00	1.00	1.00	1.00	1.00	1.00	1.00
MLF Adj:	1.00	1.00	1.00	1.00	1.00	1.00	1.00	1.00	1.00	1.00	1.00	1.00
FinalVolume:	202	2469	88	306	1298	550	651	291	124	37	243	98
Saturation Flow Module:												
Sat/Lane:	1900	1900	1900	1900	1900	1900	1900	1900	1900	1900	1900	1900
Adjustment:	0.95	0.91	0.91	0.95	0.91	0.85	0.92	0.95	0.85	0.95	0.91	0.91
Lanes:	1.00	2.90	0.10	1.00	3.00	1.00	2.00	2.00	1.00	1.00	1.43	0.57
Final Sat.:	1805	4983	178	1805	5187	1615	3502	3610	1615	1805	2462	993
Capacity Analysis Module:												
Vol/Sat:	0.11	0.50	0.50	0.17	0.25	0.34	0.19	0.08	0.08	0.02	0.10	0.10
Crit Moves:		****		****			****				****	
Green/Cycle:	0.17	0.52	0.52	0.18	0.53	0.53	0.20	0.24	0.24	0.06	0.10	0.10
Volume/Cap:	0.65	0.95	0.95	0.95	0.47	0.65	0.95	0.34	0.32	0.34	0.95	0.95
Delay/Veh:	43.1	31.1	31.1	77.5	15.0	18.7	62.4	31.7	31.9	46.9	79.0	79.0
User DelAdj:	1.00	1.00	1.00	1.00	1.00	1.00	1.00	1.00	1.00	1.00	1.00	1.00
AdjDel/Veh:	43.1	31.1	31.1	77.5	15.0	18.7	62.4	31.7	31.9	46.9	79.0	79.0
LOS by Move:	D	C	C	E	B	B	E	C	C	D	E	E
HCM2kAvgQ:	7	33	33	14	9	13	15	4	3	1	9	9

Note: Queue reported is the number of cars per lane.

City of Murrieta General Plan
Existing General Plan
PM Peak Hour

Level Of Service Computation Report
2000 HCM Operations Method (Future Volume Alternative)

Intersection #18 California Oaks Road & Clinton Keith Road

Cycle (sec): 100 | Critical Vol./Cap.(X): 0.886
Loss Time (sec): 0 (Y+R=4.0 sec) | Average Delay (sec/veh): 20.6
Optimal Cycle: 180 | Level Of Service: C

Street Name:	California Oaks Road						Clinton Keith Road					
Approach:	North Bound			South Bound			East Bound			West Bound		
Movement:	L	T	R	L	T	R	L	T	R	L	T	R
Control:	Protected			Protected			Protected			Protected		
Rights:	Ovl			Include			Include			Include		
Min. Green:	0	0	0	0	0	0	0	0	0	0	0	0
Lanes:	1	0 0	0 2	0	0 0	0 0	0	0 2	1 0	1	0 3	0 0
Volume Module:												
Base Vol:	309	0	1008	0	0	0	0	2183	132	477	2389	0
Growth Adj:	1.00	1.00	1.00	1.00	1.00	1.00	1.00	1.00	1.00	1.00	1.00	1.00
Initial Bse:	309	0	1008	0	0	0	0	2183	132	477	2389	0
Added Vol:	0	0	0	0	0	0	0	0	0	0	0	0
PasserByVol:	0	0	0	0	0	0	0	0	0	0	0	0
Initial Fut:	309	0	1008	0	0	0	0	2183	132	477	2389	0
User Adj:	1.00	1.00	1.00	1.00	1.00	1.00	1.00	1.00	1.00	1.00	1.00	1.00
PHF Adj:	1.00	1.00	1.00	1.00	1.00	1.00	1.00	1.00	1.00	1.00	1.00	1.00
PHF Volume:	309	0	1008	0	0	0	0	2183	132	477	2389	0
Reduct Vol:	0	0	0	0	0	0	0	0	0	0	0	0
Reduced Vol:	309	0	1008	0	0	0	0	2183	132	477	2389	0
PCE Adj:	1.00	1.00	1.00	1.00	1.00	1.00	1.00	1.00	1.00	1.00	1.00	1.00
MLF Adj:	1.00	1.00	1.00	1.00	1.00	1.00	1.00	1.00	1.00	1.00	1.00	1.00
FinalVolume:	309	0	1008	0	0	0	0	2183	132	477	2389	0
Saturation Flow Module:												
Sat/Lane:	1900	1900	1900	1900	1900	1900	1900	1900	1900	1900	1900	1900
Adjustment:	0.95	1.00	0.75	1.00	1.00	1.00	1.00	0.90	0.90	0.95	0.91	1.00
Lanes:	1.00	0.00	2.00	0.00	0.00	0.00	0.00	2.83	0.17	1.00	3.00	0.00
Final Sat.:	1805	0	2842	0	0	0	0	4847	293	1805	5187	0
Capacity Analysis Module:												
Vol/Sat:	0.17	0.00	0.35	0.00	0.00	0.00	0.00	0.45	0.45	0.26	0.46	0.00
Crit Moves:	****							****		****		
Green/Cycle:	0.19	0.00	0.49	0.00	0.00	0.00	0.00	0.51	0.51	0.30	0.81	0.00
Volume/Cap:	0.89	0.00	0.72	0.00	0.00	0.00	0.00	0.89	0.89	0.89	0.57	0.00
Delay/Veh:	62.0	0.0	21.9	0.0	0.0	0.0	0.0	26.0	26.0	49.6	3.7	0.0
User DelAdj:	1.00	1.00	1.00	1.00	1.00	1.00	1.00	1.00	1.00	1.00	1.00	1.00
AdjDel/Veh:	62.0	0.0	21.9	0.0	0.0	0.0	0.0	26.0	26.0	49.6	3.7	0.0
LOS by Move:	E	A	C	A	A	A	A	C	C	D	A	A
HCM2kAvgQ:	13	0	15	0	0	0	0	27	27	17	10	0

Note: Queue reported is the number of cars per lane.

City of Murrieta General Plan
Existing General Plan
PM Peak Hour

Level Of Service Computation Report
2000 HCM Operations Method (Future Volume Alternative)

Intersection #19 I-215 SB Off-Ramp & Clinton Keith Road

Cycle (sec): 100 | Critical Vol./Cap.(X): 0.680
Loss Time (sec): 0 (Y+R=4.0 sec) | Average Delay (sec/veh): 12.2
Optimal Cycle: 71 | Level Of Service: B

Street Name:	I-215 SB Off-Ramp						Clinton Keith Road					
Approach:	North Bound			South Bound			East Bound			West Bound		
Movement:	L	T	R	L	T	R	L	T	R	L	T	R
Control:	Split Phase			Split Phase			Protected			Protected		
Rights:	Include			Include			Include			Ignore		
Min. Green:	0	0	0	0	0	0	0	0	0	0	0	0
Lanes:	0 0	0 0	0	0 1	0 0	2	0 0	3 0	1	0 0	3 0	1
Volume Module:												
Base Vol:	0	0	0	34	1	626	0	2385	650	0	2165	145
Growth Adj:	1.00	1.00	1.00	1.00	1.00	1.00	1.00	1.00	1.00	1.00	1.00	1.00
Initial Bse:	0	0	0	34	1	626	0	2385	650	0	2165	145
Added Vol:	0	0	0	0	0	0	0	0	0	0	0	0
PasserByVol:	0	0	0	0	0	0	0	0	0	0	0	0
Initial Fut:	0	0	0	34	1	626	0	2385	650	0	2165	145
User Adj:	1.00	1.00	1.00	1.00	1.00	1.00	1.00	1.00	1.00	1.00	1.00	0.00
PHF Adj:	1.00	1.00	1.00	1.00	1.00	1.00	1.00	1.00	1.00	1.00	1.00	0.00
PHF Volume:	0	0	0	34	1	626	0	2385	650	0	2165	0
Reduct Vol:	0	0	0	0	0	0	0	0	0	0	0	0
Reduced Vol:	0	0	0	34	1	626	0	2385	650	0	2165	0
PCE Adj:	1.00	1.00	1.00	1.00	1.00	1.00	1.00	1.00	1.00	1.00	1.00	0.00
MLF Adj:	1.00	1.00	1.00	1.00	1.00	1.00	1.00	1.00	1.00	1.00	1.00	0.00
FinalVolume:	0	0	0	34	1	626	0	2385	650	0	2165	0
Saturation Flow Module:												
Sat/Lane:	1900	1900	1900	1900	1900	1900	1900	1900	1900	1900	1900	1900
Adjustment:	1.00	1.00	1.00	0.99	0.99	0.75	1.00	0.91	0.85	1.00	0.91	1.00
Lanes:	0.00	0.00	0.00	0.97	0.03	2.00	0.00	3.00	1.00	0.00	3.00	1.00
Final Sat.:	0	0	0	1831	54	2842	0	5187	1615	0	5187	1900
Capacity Analysis Module:												
Vol/Sat:	0.00	0.00	0.00	0.02	0.02	0.22	0.00	0.46	0.40	0.00	0.42	0.00
Crit Moves:						****		****		****		
Green/Cycle:	0.00	0.00	0.00	0.32	0.32	0.32	0.00	0.68	0.68	0.00	0.68	0.00
Volume/Cap:	0.00	0.00	0.00	0.06	0.06	0.68	0.00	0.68	0.60	0.00	0.62	0.00
Delay/Veh:	0.0	0.0	0.0	23.3	23.3	31.4	0.0	10.3	9.7	0.0	9.3	0.0
User DelAdj:	1.00	1.00	1.00	1.00	1.00	1.00	1.00	1.00	1.00	1.00	1.00	1.00
AdjDel/Veh:	0.0	0.0	0.0	23.3	23.3	31.4	0.0	10.3	9.7	0.0	9.3	0.0
LOS by Move:	A	A	A	C	C	C	A	B	A	A	A	A
HCM2kAvgQ:	0	0	0	1	1	11	0	17	11	0	14	0

Note: Queue reported is the number of cars per lane.

City of Murrieta General Plan
Existing General Plan
PM Peak Hour

Level Of Service Computation Report
2000 HCM Operations Method (Future Volume Alternative)

Intersection #20 I-215 NB Off Ramp & Clinton Keith Road

Cycle (sec): 100 Critical Vol./Cap.(X): 0.712
Loss Time (sec): 0 (Y+R=4.0 sec) Average Delay (sec/veh): 13.4
Optimal Cycle: 79 Level Of Service: B

Street Name:	I-215 NB Off Ramp						Clinton Keith Road					
Approach:	North Bound			South Bound			East Bound			West Bound		
Movement:	L -	T -	R	L -	T -	R	L -	T -	R	L -	T -	R
Control:	Split Phase			Split Phase			Protected			Protected		
Rights:	Include			Include			Include			Ignore		
Min. Green:	0	0	0	0	0	0	0	0	0	0	0	0
Lanes:	0	1 0	1 0	0	0 0	0 0	0	0 3	0 1	0	0 3	0 1
Volume Module:												
Base Vol:	347	1	384	0	0	0	0	1391	271	0	2404	265
Growth Adj:	1.00	1.00	1.00	1.00	1.00	1.00	1.00	1.00	1.00	1.00	1.00	1.00
Initial Bse:	347	1	384	0	0	0	0	1391	271	0	2404	265
Added Vol:	0	0	0	0	0	0	0	0	0	0	0	0
PasserByVol:	0	0	0	0	0	0	0	0	0	0	0	0
Initial Fut:	347	1	384	0	0	0	0	1391	271	0	2404	265
User Adj:	1.00	1.00	1.00	1.00	1.00	1.00	1.00	1.00	1.00	1.00	1.00	0.00
PHF Adj:	1.00	1.00	1.00	1.00	1.00	1.00	1.00	1.00	1.00	1.00	1.00	0.00
PHF Volume:	347	1	384	0	0	0	0	1391	271	0	2404	0
Reduct Vol:	0	0	0	0	0	0	0	0	0	0	0	0
Reduced Vol:	347	1	384	0	0	0	0	1391	271	0	2404	0
PCE Adj:	1.00	1.00	1.00	1.00	1.00	1.00	1.00	1.00	1.00	1.00	1.00	0.00
MLF Adj:	1.00	1.00	1.00	1.00	1.00	1.00	1.00	1.00	1.00	1.00	1.00	0.00
FinalVolume:	347	1	384	0	0	0	0	1391	271	0	2404	0
Saturation Flow Module:												
Sat/Lane:	1900	1900	1900	1900	1900	1900	1900	1900	1900	1900	1900	1900
Adjustment:	0.81	0.81	0.81	1.00	1.00	1.00	1.00	0.91	0.85	1.00	0.91	1.00
Lanes:	0.99	0.01	1.00	0.00	0.00	0.00	0.00	3.00	1.00	0.00	3.00	1.00
Final Sat.:	1540	4	1544	0	0	0	0	5187	1615	0	5187	1900
Capacity Analysis Module:												
Vol/Sat:	0.23	0.23	0.25	0.00	0.00	0.00	0.00	0.27	0.17	0.00	0.46	0.00
Crit Moves:			****				****				****	
Green/Cycle:	0.35	0.35	0.35	0.00	0.00	0.00	0.00	0.65	0.65	0.00	0.65	0.00
Volume/Cap:	0.65	0.65	0.71	0.00	0.00	0.00	0.00	0.41	0.26	0.00	0.71	0.00
Delay/Veh:	28.6	28.6	30.6	0.0	0.0	0.0	0.0	8.4	7.5	0.0	12.1	0.0
User DelAdj:	1.00	1.00	1.00	1.00	1.00	1.00	1.00	1.00	1.00	1.00	1.00	1.00
AdjDel/Veh:	28.6	28.6	30.6	0.0	0.0	0.0	0.0	8.4	7.5	0.0	12.1	0.0
LOS by Move:	C	C	C	A	A	A	A	A	A	A	B	A
HCM2kAvgQ:	10	10	12	0	0	0	0	7	4	0	18	0

Note: Queue reported is the number of cars per lane.

City of Murrieta General Plan
Existing General Plan
PM Peak Hour

Level Of Service Computation Report
2000 HCM Operations Method (Future Volume Alternative)

Intersection #21 Antelope Road & Clinton Keith Road

Cycle (sec): 100 Critical Vol./Cap.(X): 0.422
Loss Time (sec): 0 (Y+R=4.0 sec) Average Delay (sec/veh): 2.7
Optimal Cycle: 39 Level Of Service: A

Street Name:	Antelope Road						Clinton Keith Road					
Approach:	North Bound			South Bound			East Bound			West Bound		
Movement:	L -	T -	R	L -	T -	R	L -	T -	R	L -	T -	R
Control:	Protected			Protected			Protected			Protected		
Rights:	Include			Ignore			Include			Include		
Min. Green:	0	0	0	0	0	0	0	0	0	0	0	0
Lanes:	0	0 0	0 0	2	0 0	0 2	2	0 3	0 0	0	0 2	1 0
Volume Module:												
Base Vol:	0	0	0	39	0	627	136	1706	0	0	1684	211
Growth Adj:	1.00	1.00	1.00	1.00	1.00	1.00	1.00	1.00	1.00	1.00	1.00	1.00
Initial Bse:	0	0	0	39	0	627	136	1706	0	0	1684	211
Added Vol:	0	0	0	0	0	0	0	0	0	0	0	0
PasserByVol:	0	0	0	0	0	0	0	0	0	0	0	0
Initial Fut:	0	0	0	39	0	627	136	1706	0	0	1684	211
User Adj:	1.00	1.00	1.00	1.00	1.00	0.00	1.00	1.00	1.00	1.00	1.00	1.00
PHF Adj:	1.00	1.00	1.00	1.00	1.00	0.00	1.00	1.00	1.00	1.00	1.00	1.00
PHF Volume:	0	0	0	39	0	0	136	1706	0	0	1684	211
Reduct Vol:	0	0	0	0	0	0	0	0	0	0	0	0
Reduced Vol:	0	0	0	39	0	0	136	1706	0	0	1684	211
PCE Adj:	1.00	1.00	1.00	1.00	1.00	0.00	1.00	1.00	1.00	1.00	1.00	1.00
MLF Adj:	1.00	1.00	1.00	1.00	1.00	0.00	1.00	1.00	1.00	1.00	1.00	1.00
FinalVolume:	0	0	0	39	0	0	136	1706	0	0	1684	211
Saturation Flow Module:												
Sat/Lane:	1900	1900	1900	1900	1900	1900	1900	1900	1900	1900	1900	1900
Adjustment:	1.00	1.00	1.00	0.92	1.00	0.88	0.92	0.91	1.00	1.00	0.89	0.89
Lanes:	0.00	0.00	0.00	2.00	0.00	2.00	2.00	3.00	0.00	0.00	2.67	0.33
Final Sat.:	0	0	0	3502	0	3344	3502	5187	0	0	4531	568
Capacity Analysis Module:												
Vol/Sat:	0.00	0.00	0.00	0.01	0.00	0.00	0.04	0.33	0.00	0.00	0.37	0.37
Crit Moves:				****			****				****	
Green/Cycle:	0.00	0.00	0.00	0.03	0.00	0.00	0.09	0.97	0.00	0.00	0.88	0.88
Volume/Cap:	0.00	0.00	0.00	0.42	0.00	0.00	0.42	0.34	0.00	0.00	0.42	0.42
Delay/Veh:	0.0	0.0	0.0	51.0	0.0	0.0	43.8	0.1	0.0	0.0	1.2	1.2
User DelAdj:	1.00	1.00	1.00	1.00	1.00	1.00	1.00	1.00	1.00	1.00	1.00	1.00
AdjDel/Veh:	0.0	0.0	0.0	51.0	0.0	0.0	43.8	0.1	0.0	0.0	1.2	1.2
LOS by Move:	A	A	A	D	A	A	D	A	A	A	A	A
HCM2kAvgQ:	0	0	0	1	0	0	3	1	0	0	4	4

Note: Queue reported is the number of cars per lane.

City of Murrieta General Plan
Existing General Plan
PM Peak Hour

Level Of Service Computation Report
2000 HCM Operations Method (Future Volume Alternative)

Intersection #23 Liberty Road & Clinton Keith Road

Cycle (sec): 100 Critical Vol./Cap.(X): 0.567
Loss Time (sec): 0 (Y+R=4.0 sec) Average Delay (sec/veh): 6.2
Optimal Cycle: 53 Level Of Service: A

Street Name:	Liberty Road						Clinton Keith Road					
Approach:	North Bound			South Bound			East Bound			West Bound		
Movement:	L	T	R	L	T	R	L	T	R	L	T	R
Control:	Protected			Protected			Protected			Protected		
Rights:	Include			Include			Include			Include		
Min. Green:	0	0	0	0	0	0	0	0	0	0	0	0
Lanes:	2 0	0	0 1	0 0	0	0 0	0 0	2	1 0	1 0	3	0 0
Volume Module:												
Base Vol:	54	0	191	0	0	0	0	2141	122	16	2007	0
Growth Adj:	1.00	1.00	1.00	1.00	1.00	1.00	1.00	1.00	1.00	1.00	1.00	1.00
Initial Bse:	54	0	191	0	0	0	0	2141	122	16	2007	0
Added Vol:	0	0	0	0	0	0	0	0	0	0	0	0
PasserByVol:	0	0	0	0	0	0	0	0	0	0	0	0
Initial Fut:	54	0	191	0	0	0	0	2141	122	16	2007	0
User Adj:	1.00	1.00	1.00	1.00	1.00	1.00	1.00	1.00	1.00	1.00	1.00	1.00
PHF Adj:	1.00	1.00	1.00	1.00	1.00	1.00	1.00	1.00	1.00	1.00	1.00	1.00
PHF Volume:	54	0	191	0	0	0	0	2141	122	16	2007	0
Reduct Vol:	0	0	0	0	0	0	0	0	0	0	0	0
Reduced Vol:	54	0	191	0	0	0	0	2141	122	16	2007	0
PCE Adj:	1.00	1.00	1.00	1.00	1.00	1.00	1.00	1.00	1.00	1.00	1.00	1.00
MLF Adj:	1.00	1.00	1.00	1.00	1.00	1.00	1.00	1.00	1.00	1.00	1.00	1.00
FinalVolume:	54	0	191	0	0	0	0	2141	122	16	2007	0
Saturation Flow Module:												
Sat/Lane:	1900	1900	1900	1900	1900	1900	1900	1900	1900	1900	1900	1900
Adjustment:	0.92	1.00	0.85	1.00	1.00	1.00	1.00	0.90	0.90	0.95	0.91	1.00
Lanes:	2.00	0.00	1.00	0.00	0.00	0.00	0.00	2.84	0.16	1.00	3.00	0.00
Final Sat.:	3502	0	1615	0	0	0	0	4868	277	1805	5187	0
Capacity Analysis Module:												
Vol/Sat:	0.02	0.00	0.12	0.00	0.00	0.00	0.00	0.44	0.44	0.01	0.39	0.00
Crit Moves:			****					****		****		
Green/Cycle:	0.21	0.00	0.21	0.00	0.00	0.00	0.00	0.78	0.78	0.02	0.79	0.00
Volume/Cap:	0.07	0.00	0.57	0.00	0.00	0.00	0.00	0.57	0.57	0.57	0.49	0.00
Delay/Veh:	31.8	0.0	37.8	0.0	0.0	0.0	0.0	4.7	4.7	73.2	3.6	0.0
User DelAdj:	1.00	1.00	1.00	1.00	1.00	1.00	1.00	1.00	1.00	1.00	1.00	1.00
AdjDel/Veh:	31.8	0.0	37.8	0.0	0.0	0.0	0.0	4.7	4.7	73.2	3.6	0.0
LOS by Move:	C	A	D	A	A	A	A	A	A	E	A	A
HCM2kAvgQ:	1	0	6	0	0	0	0	11	11	1	8	0

Note: Queue reported is the number of cars per lane.

City of Murrieta General Plan
Existing General Plan
PM Peak Hour

Level Of Service Computation Report
2000 HCM Operations Method (Future Volume Alternative)

Intersection #24 Leon Road & Clinton Keith Road

Cycle (sec): 100 Critical Vol./Cap.(X): 0.879
Loss Time (sec): 0 (Y+R=4.0 sec) Average Delay (sec/veh): 20.7
Optimal Cycle: 180 Level Of Service: C

Street Name:	Leon Road						Clinton Keith Road					
Approach:	North Bound			South Bound			East Bound			West Bound		
Movement:	L	T	R	L	T	R	L	T	R	L	T	R
Control:	Protected			Protected			Protected			Protected		
Rights:	Include			Ovl			Include			Include		
Min. Green:	0	0	0	0	0	0	0	0	0	0	0	0
Lanes:	0 0	0	0 0	1 0	0	0 2	2 0	3	0 0	0 0	3	0 1
Volume Module:												
Base Vol:	0	0	0	131	0	1031	481	1831	0	0	996	834
Growth Adj:	1.00	1.00	1.00	1.00	1.00	1.00	1.00	1.00	1.00	1.00	1.00	1.00
Initial Bse:	0	0	0	131	0	1031	481	1831	0	0	996	834
Added Vol:	0	0	0	0	0	0	0	0	0	0	0	0
PasserByVol:	0	0	0	0	0	0	0	0	0	0	0	0
Initial Fut:	0	0	0	131	0	1031	481	1831	0	0	996	834
User Adj:	1.00	1.00	1.00	1.00	1.00	1.00	1.00	1.00	1.00	1.00	1.00	1.00
PHF Adj:	1.00	1.00	1.00	1.00	1.00	1.00	1.00	1.00	1.00	1.00	1.00	1.00
PHF Volume:	0	0	0	131	0	1031	481	1831	0	0	996	834
Reduct Vol:	0	0	0	0	0	0	0	0	0	0	0	0
Reduced Vol:	0	0	0	131	0	1031	481	1831	0	0	996	834
PCE Adj:	1.00	1.00	1.00	1.00	1.00	1.00	1.00	1.00	1.00	1.00	1.00	1.00
MLF Adj:	1.00	1.00	1.00	1.00	1.00	1.00	1.00	1.00	1.00	1.00	1.00	1.00
FinalVolume:	0	0	0	131	0	1031	481	1831	0	0	996	834
Saturation Flow Module:												
Sat/Lane:	1900	1900	1900	1900	1900	1900	1900	1900	1900	1900	1900	1900
Adjustment:	1.00	1.00	1.00	0.95	1.00	0.75	0.92	0.91	1.00	1.00	0.91	0.85
Lanes:	0.00	0.00	0.00	1.00	0.00	2.00	2.00	3.00	0.00	0.00	3.00	1.00
Final Sat.:	0	0	0	1805	0	2842	3502	5187	0	0	5187	1615
Capacity Analysis Module:												
Vol/Sat:	0.00	0.00	0.00	0.07	0.00	0.36	0.14	0.35	0.00	0.00	0.19	0.52
Crit Moves:						****	****					****
Green/Cycle:	0.00	0.00	0.00	0.26	0.00	0.41	0.16	0.74	0.00	0.00	0.59	0.59
Volume/Cap:	0.00	0.00	0.00	0.28	0.00	0.88	0.88	0.47	0.00	0.00	0.33	0.88
Delay/Veh:	0.0	0.0	0.0	30.2	0.0	34.9	56.4	5.2	0.0	0.0	10.6	27.1
User DelAdj:	1.00	1.00	1.00	1.00	1.00	1.00	1.00	1.00	1.00	1.00	1.00	1.00
AdjDel/Veh:	0.0	0.0	0.0	30.2	0.0	34.9	56.4	5.2	0.0	0.0	10.6	27.1
LOS by Move:	A	A	A	C	A	C	E	A	A	A	B	C
HCM2kAvgQ:	0	0	0	3	0	20	11	8	0	0	6	25

Note: Queue reported is the number of cars per lane.

City of Murrieta General Plan
Existing General Plan
PM Peak Hour

Level Of Service Computation Report
2000 HCM Operations Method (Future Volume Alternative)

Intersection #25 Winchester Road - SR-79 & Benton Road

Cycle (sec): 100 Critical Vol./Cap.(X): 1.089
Loss Time (sec): 0 (Y+R=4.0 sec) Average Delay (sec/veh): 63.2
Optimal Cycle: 180 Level Of Service: E

Street Name:	Winchester Road - SR-79						Benton Road					
Approach:	North Bound			South Bound			East Bound			West Bound		
Movement:	L -	T -	R	L -	T -	R	L -	T -	R	L -	T -	R
Control:	Protected			Protected			Protected			Protected		
Rights:	Include			Include			Include			Include		
Min. Green:	0	0	0	0	0	0	0	0	0	0	0	0
Lanes:	2 0	3 0	1	2 0	3 0	1	2 0	2 0	2	2 0	2 0	1
Volume Module:												
Base Vol:	598	2525	712	55	1001	480	69	556	1481	230	683	69
Growth Adj:	1.00	1.00	1.00	1.00	1.00	1.00	1.00	1.00	1.00	1.00	1.00	1.00
Initial Bse:	598	2525	712	55	1001	480	69	556	1481	230	683	69
Added Vol:	0	0	0	0	0	0	0	0	0	0	0	0
PasserByVol:	0	0	0	0	0	0	0	0	0	0	0	0
Initial Fut:	598	2525	712	55	1001	480	69	556	1481	230	683	69
User Adj:	1.00	1.00	1.00	1.00	1.00	1.00	1.00	1.00	1.00	1.00	1.00	1.00
PHF Adj:	1.00	1.00	1.00	1.00	1.00	1.00	1.00	1.00	1.00	1.00	1.00	1.00
PHF Volume:	598	2525	712	55	1001	480	69	556	1481	230	683	69
Reduct Vol:	0	0	0	0	0	0	0	0	0	0	0	0
Reduced Vol:	598	2525	712	55	1001	480	69	556	1481	230	683	69
PCE Adj:	1.00	1.00	1.00	1.00	1.00	1.00	1.00	1.00	1.00	1.00	1.00	1.00
MLF Adj:	1.00	1.00	1.00	1.00	1.00	1.00	1.00	1.00	1.00	1.00	1.00	1.00
FinalVolume:	598	2525	712	55	1001	480	69	556	1481	230	683	69
Saturation Flow Module:												
Sat/Lane:	1900	1900	1900	1900	1900	1900	1900	1900	1900	1900	1900	1900
Adjustment:	0.92	0.91	0.85	0.92	0.91	0.85	0.92	0.95	0.75	0.92	0.95	0.85
Lanes:	2.00	3.00	1.00	2.00	3.00	1.00	2.00	2.00	2.00	2.00	2.00	1.00
Final Sat.:	3502	5187	1615	3502	5187	1615	3502	3610	2842	3502	3610	1615
Capacity Analysis Module:												
Vol/Sat:	0.17	0.49	0.44	0.02	0.19	0.30	0.02	0.15	0.52	0.07	0.19	0.04
Crit Moves:		****		****					****	****		
Green/Cycle:	0.17	0.45	0.45	0.01	0.29	0.29	0.05	0.48	0.48	0.06	0.49	0.49
Volume/Cap:	1.01	1.09	0.99	1.09	0.66	1.01	0.39	0.32	1.09	1.09	0.39	0.09
Delay/Veh:	82.3	75.7	57.4	203.1	32.0	80.4	47.4	16.2	78.6	134.7	16.3	13.7
User DelAdj:	1.00	1.00	1.00	1.00	1.00	1.00	1.00	1.00	1.00	1.00	1.00	1.00
AdjDel/Veh:	82.3	75.7	57.4	203.1	32.0	80.4	47.4	16.2	78.6	134.7	16.3	13.7
LOS by Move:	F	E	E	F	C	F	D	B	E	F	B	B
HCM2kAvgQ:	15	42	28	3	11	22	2	5	39	8	7	1

Note: Queue reported is the number of cars per lane.

City of Murrieta General Plan
Existing General Plan
PM Peak Hour

Level Of Service Computation Report
2000 HCM Operations Method (Future Volume Alternative)

Intersection #26 Winchester Road - SR-79 & Via Mira Mosa

Cycle (sec): 100 Critical Vol./Cap.(X): 0.982
Loss Time (sec): 0 (Y+R=4.0 sec) Average Delay (sec/veh): 27.7
Optimal Cycle: 180 Level Of Service: C

Street Name:	Winchester Road - SR-79						Via Mira Mosa					
Approach:	North Bound			South Bound			East Bound			West Bound		
Movement:	L -	T -	R	L -	T -	R	L -	T -	R	L -	T -	R
Control:	Protected			Protected			Protected			Protected		
Rights:	Include			Include			Include			Include		
Min. Green:	0	0	0	0	0	0	0	0	0	0	0	0
Lanes:	1 0	2 1	0	1 0	2 1	0	1 0	0 1	0	1 0	0 1	0
Volume Module:												
Base Vol:	62	3221	238	125	2142	363	243	32	52	223	39	136
Growth Adj:	1.00	1.00	1.00	1.00	1.00	1.00	1.00	1.00	1.00	1.00	1.00	1.00
Initial Bse:	62	3221	238	125	2142	363	243	32	52	223	39	136
Added Vol:	0	0	0	0	0	0	0	0	0	0	0	0
PasserByVol:	0	0	0	0	0	0	0	0	0	0	0	0
Initial Fut:	62	3221	238	125	2142	363	243	32	52	223	39	136
User Adj:	1.00	1.00	1.00	1.00	1.00	1.00	1.00	1.00	1.00	1.00	1.00	1.00
PHF Adj:	1.00	1.00	1.00	1.00	1.00	1.00	1.00	1.00	1.00	1.00	1.00	1.00
PHF Volume:	62	3221	238	125	2142	363	243	32	52	223	39	136
Reduct Vol:	0	0	0	0	0	0	0	0	0	0	0	0
Reduced Vol:	62	3221	238	125	2142	363	243	32	52	223	39	136
PCE Adj:	1.00	1.00	1.00	1.00	1.00	1.00	1.00	1.00	1.00	1.00	1.00	1.00
MLF Adj:	1.00	1.00	1.00	1.00	1.00	1.00	1.00	1.00	1.00	1.00	1.00	1.00
FinalVolume:	62	3221	238	125	2142	363	243	32	52	223	39	136
Saturation Flow Module:												
Sat/Lane:	1900	1900	1900	1900	1900	1900	1900	1900	1900	1900	1900	1900
Adjustment:	0.95	0.90	0.90	0.95	0.89	0.89	0.95	0.91	0.91	0.95	0.88	0.88
Lanes:	1.00	2.79	0.21	1.00	2.57	0.43	1.00	0.38	0.62	1.00	0.22	0.78
Final Sat.:	1805	4782	353	1805	4338	735	1805	656	1067	1805	374	1304
Capacity Analysis Module:												
Vol/Sat:	0.03	0.67	0.67	0.07	0.49	0.49	0.13	0.05	0.05	0.12	0.10	0.10
Crit Moves:		****		****			****				****	
Green/Cycle:	0.05	0.69	0.69	0.07	0.71	0.71	0.14	0.07	0.07	0.17	0.11	0.11
Volume/Cap:	0.70	0.98	0.98	0.98	0.70	0.70	0.98	0.71	0.71	0.71	0.98	0.98
Delay/Veh:	68.5	26.4	26.4	120.3	9.1	9.1	94.9	63.4	63.4	46.1	106	106.4
User DelAdj:	1.00	1.00	1.00	1.00	1.00	1.00	1.00	1.00	1.00	1.00	1.00	1.00
AdjDel/Veh:	68.5	26.4	26.4	120.3	9.1	9.1	94.9	63.4	63.4	46.1	106	106.4
LOS by Move:	E	C	C	F	A	A	F	E	E	D	F	F
HCM2kAvgQ:	3	45	45	7	17	17	12	4	4	8	9	9

Note: Queue reported is the number of cars per lane.

City of Murrieta General Plan
Existing General Plan
PM Peak Hour

Level Of Service Computation Report
2000 HCM Operations Method (Future Volume Alternative)

Intersection #27 Monroe Ave & Los Alamos

Cycle (sec): 100 Critical Vol./Cap.(X): 0.800
Loss Time (sec): 0 (Y+R=4.0 sec) Average Delay (sec/veh): 28.0
Optimal Cycle: 114 Level Of Service: C

Street Name:	Monroe Ave						Los Alamos					
Approach:	North Bound			South Bound			East Bound			West Bound		
Movement:	L -	T -	R	L -	T -	R	L -	T -	R	L -	T -	R
Control:	Protected			Protected			Protected			Protected		
Rights:	Include			Include			Include			Include		
Min. Green:	0	0	0	0	0	0	0	0	0	0	0	0
Lanes:	1 0	1	1 0	2 0	2	0 1	1 0	1	1 0	1 0	2	0 1
Volume Module:												
Base Vol:	28	450	277	269	347	63	207	1442	176	98	954	464
Growth Adj:	1.00	1.00	1.00	1.00	1.00	1.00	1.00	1.00	1.00	1.00	1.00	1.00
Initial Bse:	28	450	277	269	347	63	207	1442	176	98	954	464
Added Vol:	0	0	0	0	0	0	0	0	0	0	0	0
PasserByVol:	0	0	0	0	0	0	0	0	0	0	0	0
Initial Fut:	28	450	277	269	347	63	207	1442	176	98	954	464
User Adj:	1.00	1.00	1.00	1.00	1.00	1.00	1.00	1.00	1.00	1.00	1.00	1.00
PHF Adj:	1.00	1.00	1.00	1.00	1.00	1.00	1.00	1.00	1.00	1.00	1.00	1.00
PHF Volume:	28	450	277	269	347	63	207	1442	176	98	954	464
Reduct Vol:	0	0	0	0	0	0	0	0	0	0	0	0
Reduced Vol:	28	450	277	269	347	63	207	1442	176	98	954	464
PCE Adj:	1.00	1.00	1.00	1.00	1.00	1.00	1.00	1.00	1.00	1.00	1.00	1.00
MLF Adj:	1.00	1.00	1.00	1.00	1.00	1.00	1.00	1.00	1.00	1.00	1.00	1.00
FinalVolume:	28	450	277	269	347	63	207	1442	176	98	954	464
Saturation Flow Module:												
Sat/Lane:	1900	1900	1900	1900	1900	1900	1900	1900	1900	1900	1900	1900
Adjustment:	0.95	0.90	0.90	0.92	0.95	0.85	0.95	0.93	0.93	0.95	0.95	0.85
Lanes:	1.00	1.24	0.76	2.00	2.00	1.00	1.00	1.78	0.22	1.00	2.00	1.00
Final Sat.:	1805	2107	1297	3502	3610	1615	1805	3166	386	1805	3610	1615
Capacity Analysis Module:												
Vol/Sat:	0.02	0.21	0.21	0.08	0.10	0.04	0.11	0.46	0.46	0.05	0.26	0.29
Crit Moves:		****		****				****		****		
Green/Cycle:	0.05	0.27	0.27	0.10	0.31	0.31	0.18	0.57	0.57	0.07	0.46	0.46
Volume/Cap:	0.31	0.80	0.80	0.80	0.31	0.12	0.63	0.80	0.80	0.80	0.58	0.63
Delay/Veh:	47.7	39.3	39.3	57.0	26.3	24.7	41.7	19.4	19.4	76.0	20.7	22.6
User DelAdj:	1.00	1.00	1.00	1.00	1.00	1.00	1.00	1.00	1.00	1.00	1.00	1.00
AdjDel/Veh:	47.7	39.3	39.3	57.0	26.3	24.7	41.7	19.4	19.4	76.0	20.7	22.6
LOS by Move:	D	D	D	E	C	C	D	B	B	E	C	C
HCM2kAvgQ:	1	13	13	6	4	1	7	22	22	5	12	11

Note: Queue reported is the number of cars per lane.

City of Murrieta General Plan
Existing General Plan
PM Peak Hour

Level Of Service Computation Report
2000 HCM Operations Method (Future Volume Alternative)

Intersection #28 Jefferson Avenue & Murrieta Hot Springs Road

Cycle (sec): 100 Critical Vol./Cap.(X): 1.684
Loss Time (sec): 0 (Y+R=4.0 sec) Average Delay (sec/veh): 173.6
Optimal Cycle: 180 Level Of Service: F

Street Name:	Jefferson Avenue						Murrieta Hot Springs Road					
Approach:	North Bound			South Bound			East Bound			West Bound		
Movement:	L -	T -	R	L -	T -	R	L -	T -	R	L -	T -	R
Control:	Protected			Protected			Protected			Protected		
Rights:	Include			Include			Include			Include		
Min. Green:	0	0	0	0	0	0	0	0	0	0	0	0
Lanes:	1 0	3	0 1	1 0	2	1 0	1 0	2	1 0	1 0	2	1 0
Volume Module:												
Base Vol:	7	2262	1299	650	1005	66	33	187	121	648	97	752
Growth Adj:	1.00	1.00	1.00	1.00	1.00	1.00	1.00	1.00	1.00	1.00	1.00	1.00
Initial Bse:	7	2262	1299	650	1005	66	33	187	121	648	97	752
Added Vol:	0	0	0	0	0	0	0	0	0	0	0	0
PasserByVol:	0	0	0	0	0	0	0	0	0	0	0	0
Initial Fut:	7	2262	1299	650	1005	66	33	187	121	648	97	752
User Adj:	1.00	1.00	1.00	1.00	1.00	1.00	1.00	1.00	1.00	1.00	1.00	1.00
PHF Adj:	1.00	1.00	1.00	1.00	1.00	1.00	1.00	1.00	1.00	1.00	1.00	1.00
PHF Volume:	7	2262	1299	650	1005	66	33	187	121	648	97	752
Reduct Vol:	0	0	0	0	0	0	0	0	0	0	0	0
Reduced Vol:	7	2262	1299	650	1005	66	33	187	121	648	97	752
PCE Adj:	1.00	1.00	1.00	1.00	1.00	1.00	1.00	1.00	1.00	1.00	1.00	1.00
MLF Adj:	1.00	1.00	1.00	1.00	1.00	1.00	1.00	1.00	1.00	1.00	1.00	1.00
FinalVolume:	7	2262	1299	650	1005	66	33	187	121	648	97	752
Saturation Flow Module:												
Sat/Lane:	1900	1900	1900	1900	1900	1900	1900	1900	1900	1900	1900	1900
Adjustment:	0.95	0.91	0.85	0.95	0.90	0.90	0.95	0.86	0.86	0.95	0.79	0.79
Lanes:	1.00	3.00	1.00	1.00	2.82	0.18	1.00	2.00	1.00	1.00	2.00	1.00
Final Sat.:	1805	5187	1615	1805	4824	317	1805	3254	1627	1805	2998	1499
Capacity Analysis Module:												
Vol/Sat:	0.00	0.44	0.80	0.36	0.21	0.21	0.02	0.06	0.07	0.36	0.03	0.50
Crit Moves:			****	****			****					****
Green/Cycle:	0.01	0.48	0.48	0.21	0.68	0.68	0.01	0.05	0.05	0.26	0.30	0.30
Volume/Cap:	0.31	0.91	1.68	1.68	0.31	0.31	1.68	1.08	1.40	1.40	0.11	1.68
Delay/Veh:	56.4	29.9	339.7	358.4	6.6	6.6	509.0	125	254.2	231.7	25.5	351.6
User DelAdj:	1.00	1.00	1.00	1.00	1.00	1.00	1.00	1.00	1.00	1.00	1.00	1.00
AdjDel/Veh:	56.4	29.9	339.7	358.4	6.6	6.6	509.0	125	254.2	231.7	25.5	351.6
LOS by Move:	E	C	F	F	A	A	F	F	F	F	C	F
HCM2kAvgQ:	1	28	104	53	5	5	4	7	11	44	1	67

Note: Queue reported is the number of cars per lane.

City of Murrieta General Plan
Existing General Plan
PM Peak Hour

Level Of Service Computation Report
2000 HCM Operations Method (Future Volume Alternative)

Intersection #29 Madison Avenue & Murrieta Hot Springs Road

Cycle (sec): 100 Critical Vol./Cap.(X): 1.340
Loss Time (sec): 0 (Y+R=4.0 sec) Average Delay (sec/veh): 128.8
Optimal Cycle: 180 Level Of Service: F

Street Name:	Madison Avenue						Murrieta Hot Springs Road					
Approach:	North Bound			South Bound			East Bound			West Bound		
Movement:	L -	T -	R	L -	T -	R	L -	T -	R	L -	T -	R
Control:	Protected			Protected			Protected			Protected		
Rights:	Include			Include			Include			Include		
Min. Green:	0	0	0	0	0	0	0	0	0	0	0	0
Lanes:	2 0	2 0	1	2 0	1 1	0	2 0	3 1	0	2 0	3 0	1
Volume Module:												
Base Vol:	326	599	1158	335	252	123	398	1650	318	824	1291	199
Growth Adj:	1.00	1.00	1.00	1.00	1.00	1.00	1.00	1.00	1.00	1.00	1.00	1.00
Initial Bse:	326	599	1158	335	252	123	398	1650	318	824	1291	199
Added Vol:	0	0	0	0	0	0	0	0	0	0	0	0
PasserByVol:	0	0	0	0	0	0	0	0	0	0	0	0
Initial Fut:	326	599	1158	335	252	123	398	1650	318	824	1291	199
User Adj:	1.00	1.00	1.00	1.00	1.00	1.00	1.00	1.00	1.00	1.00	1.00	1.00
PHF Adj:	1.00	1.00	1.00	1.00	1.00	1.00	1.00	1.00	1.00	1.00	1.00	1.00
PHF Volume:	326	599	1158	335	252	123	398	1650	318	824	1291	199
Reduct Vol:	0	0	0	0	0	0	0	0	0	0	0	0
Reduced Vol:	326	599	1158	335	252	123	398	1650	318	824	1291	199
PCE Adj:	1.00	1.00	1.00	1.00	1.00	1.00	1.00	1.00	1.00	1.00	1.00	1.00
MLF Adj:	1.00	1.00	1.00	1.00	1.00	1.00	1.00	1.00	1.00	1.00	1.00	1.00
FinalVolume:	326	599	1158	335	252	123	398	1650	318	824	1291	199
Saturation Flow Module:												
Sat/Lane:	1900	1900	1900	1900	1900	1900	1900	1900	1900	1900	1900	1900
Adjustment:	0.92	0.95	0.85	0.92	0.90	0.90	0.92	0.89	0.89	0.92	0.91	0.85
Lanes:	2.00	2.00	1.00	2.00	1.34	0.66	2.00	3.35	0.65	2.00	3.00	1.00
Final Sat.:	3502	3610	1615	3502	2307	1126	3502	5659	1091	3502	5187	1615
Capacity Analysis Module:												
Vol/Sat:	0.09	0.17	0.72	0.10	0.11	0.11	0.11	0.29	0.29	0.24	0.25	0.12
Crit Moves:			****	****				****		****		
Green/Cycle:	0.28	0.54	0.54	0.07	0.33	0.33	0.12	0.22	0.22	0.18	0.27	0.27
Volume/Cap:	0.33	0.31	1.34	1.34	0.33	0.33	0.92	1.34	1.34	1.34	0.92	0.46
Delay/Veh:	28.9	13.0	183.9	223.7	25.6	25.6	68.5	197	196.6	204.8	45.7	31.1
User DelAdj:	1.00	1.00	1.00	1.00	1.00	1.00	1.00	1.00	1.00	1.00	1.00	1.00
AdjDel/Veh:	28.9	13.0	183.9	223.7	25.6	25.6	68.5	197	196.6	204.8	45.7	31.1
LOS by Move:	C	B	F	F	C	C	E	F	F	F	D	C
HCM2kAvgQ:	4	5	72	13	5	5	10	35	35	28	18	5

Note: Queue reported is the number of cars per lane.

City of Murrieta General Plan
Existing General Plan
PM Peak Hour

Level Of Service Computation Report
2000 HCM Operations Method (Future Volume Alternative)

Intersection #30 I-15 SB Off-Ramp & Murrieta Hot Springs Road

Cycle (sec): 100 Critical Vol./Cap.(X): 0.744
Loss Time (sec): 0 (Y+R=4.0 sec) Average Delay (sec/veh): 14.4
Optimal Cycle: 89 Level Of Service: B

Street Name:	I-15 SB Off-Ramp						Murrieta Hot Springs Road					
Approach:	North Bound			South Bound			East Bound			West Bound		
Movement:	L -	T -	R	L -	T -	R	L -	T -	R	L -	T -	R
Control:	Protected			Protected			Protected			Protected		
Rights:	Include			Include			Ignore			Ignore		
Min. Green:	0	0	0	0	0	0	0	0	0	0	0	0
Lanes:	0 0	0 0	0	1 0	1! 0	1	0 0	3 0	1	0 0	3 0	1
Volume Module:												
Base Vol:	0	0	0	685	0	412	0	2604	495	0	2333	112
Growth Adj:	1.00	1.00	1.00	1.00	1.00	1.00	1.00	1.00	1.00	1.00	1.00	1.00
Initial Bse:	0	0	0	685	0	412	0	2604	495	0	2333	112
Added Vol:	0	0	0	0	0	0	0	0	0	0	0	0
PasserByVol:	0	0	0	0	0	0	0	0	0	0	0	0
Initial Fut:	0	0	0	685	0	412	0	2604	495	0	2333	112
User Adj:	1.00	1.00	1.00	1.00	1.00	1.00	1.00	1.00	0.00	1.00	1.00	0.00
PHF Adj:	1.00	1.00	1.00	1.00	1.00	1.00	1.00	1.00	0.00	1.00	1.00	0.00
PHF Volume:	0	0	0	685	0	412	0	2604	0	0	2333	0
Reduct Vol:	0	0	0	0	0	0	0	0	0	0	0	0
Reduced Vol:	0	0	0	685	0	412	0	2604	0	0	2333	0
PCE Adj:	1.00	1.00	1.00	1.00	1.00	1.00	1.00	1.00	0.00	1.00	1.00	0.00
MLF Adj:	1.00	1.00	1.00	1.00	1.00	1.00	1.00	1.00	0.00	1.00	1.00	0.00
FinalVolume:	0	0	0	685	0	412	0	2604	0	0	2333	0
Saturation Flow Module:												
Sat/Lane:	1900	1900	1900	1900	1900	1900	1900	1900	1900	1900	1900	1900
Adjustment:	1.00	1.00	1.00	0.92	1.00	0.92	1.00	0.91	1.00	1.00	0.91	1.00
Lanes:	0.00	0.00	0.00	1.62	0.00	1.38	0.00	3.00	1.00	0.00	3.00	1.00
Final Sat.:	0	0	0	2826	0	2393	0	5187	1900	0	5187	1900
Capacity Analysis Module:												
Vol/Sat:	0.00	0.00	0.00	0.24	0.00	0.17	0.00	0.50	0.00	0.00	0.45	0.00
Crit Moves:				****				****		****		
Green/Cycle:	0.00	0.00	0.00	0.33	0.00	0.33	0.00	0.67	0.00	0.00	0.67	0.00
Volume/Cap:	0.00	0.00	0.00	0.74	0.00	0.53	0.00	0.74	0.00	0.00	0.67	0.00
Delay/Veh:	0.0	0.0	0.0	32.1	0.0	27.7	0.0	11.5	0.0	0.0	10.1	0.0
User DelAdj:	1.00	1.00	1.00	1.00	1.00	1.00	1.00	1.00	1.00	1.00	1.00	1.00
AdjDel/Veh:	0.0	0.0	0.0	32.1	0.0	27.7	0.0	11.5	0.0	0.0	10.1	0.0
LOS by Move:	A	A	A	C	A	C	A	B	A	A	B	A
HCM2kAvgQ:	0	0	0	13	0	8	0	20	0	0	16	0

Note: Queue reported is the number of cars per lane.

City of Murrieta General Plan
Existing General Plan
PM Peak Hour

Level Of Service Computation Report
2000 HCM Operations Method (Future Volume Alternative)

Intersection #31 I-15 NB Off-Ramp & Murrieta Hot Springs Road

Cycle (sec): 100 Critical Vol./Cap.(X): 0.600
Loss Time (sec): 0 (Y+R=4.0 sec) Average Delay (sec/veh): 8.2
Optimal Cycle: 57 Level Of Service: A

Street Name:	I-15 NB Off-Ramp						Murrieta Hot Springs Road					
Approach:	North Bound			South Bound			East Bound			West Bound		
Movement:	L -	T -	R	L -	T -	R	L -	T -	R	L -	T -	R
Control:	Protected			Protected			Protected			Protected		
Rights:	Include			Include			Ignore			Ignore		
Min. Green:	0	0	0	0	0	0	0	0	0	0	0	0
Lanes:	2	0	0	0	1	0	0	0	0	0	0	1
Volume Module:												
Base Vol:	197	0	259	0	0	0	0	3038	315	0	1736	1673
Growth Adj:	1.00	1.00	1.00	1.00	1.00	1.00	1.00	1.00	1.00	1.00	1.00	1.00
Initial Bse:	197	0	259	0	0	0	0	3038	315	0	1736	1673
Added Vol:	0	0	0	0	0	0	0	0	0	0	0	0
PasserByVol:	0	0	0	0	0	0	0	0	0	0	0	0
Initial Fut:	197	0	259	0	0	0	0	3038	315	0	1736	1673
User Adj:	1.00	1.00	1.00	1.00	1.00	1.00	1.00	1.00	0.00	1.00	1.00	0.00
PHF Adj:	1.00	1.00	1.00	1.00	1.00	1.00	1.00	1.00	0.00	1.00	1.00	0.00
PHF Volume:	197	0	259	0	0	0	0	3038	0	0	1736	0
Reduct Vol:	0	0	0	0	0	0	0	0	0	0	0	0
Reduced Vol:	197	0	259	0	0	0	0	3038	0	0	1736	0
PCE Adj:	1.00	1.00	1.00	1.00	1.00	1.00	1.00	1.00	0.00	1.00	1.00	0.00
MLF Adj:	1.00	1.00	1.00	1.00	1.00	1.00	1.00	1.00	0.00	1.00	1.00	0.00
FinalVolume:	197	0	259	0	0	0	0	3038	0	0	1736	0
Saturation Flow Module:												
Sat/Lane:	1900	1900	1900	1900	1900	1900	1900	1900	1900	1900	1900	1900
Adjustment:	0.92	1.00	0.85	1.00	1.00	1.00	1.00	0.91	1.00	1.00	0.91	1.00
Lanes:	2.00	0.00	1.00	0.00	0.00	0.00	0.00	4.00	1.00	0.00	4.00	1.00
Final Sat.:	3502	0	1615	0	0	0	0	6916	1900	0	6916	1900
Capacity Analysis Module:												
Vol/Sat:	0.06	0.00	0.16	0.00	0.00	0.00	0.00	0.44	0.00	0.00	0.25	0.00
Crit Moves:			****					****		****		
Green/Cycle:	0.27	0.00	0.27	0.00	0.00	0.00	0.00	0.73	0.00	0.00	0.73	0.00
Volume/Cap:	0.21	0.00	0.60	0.00	0.00	0.00	0.00	0.60	0.00	0.00	0.34	0.00
Delay/Veh:	28.5	0.0	34.3	0.0	0.0	0.0	0.0	6.6	0.0	0.0	4.8	0.0
User DelAdj:	1.00	1.00	1.00	1.00	1.00	1.00	1.00	1.00	1.00	1.00	1.00	1.00
AdjDel/Veh:	28.5	0.0	34.3	0.0	0.0	0.0	0.0	6.6	0.0	0.0	4.8	0.0
LOS by Move:	C	A	C	A	A	A	A	A	A	A	A	A
HCM2kAvgQ:	2	0	8	0	0	0	0	13	0	0	5	0

Note: Queue reported is the number of cars per lane.

City of Murrieta General Plan
Existing General Plan
PM Peak Hour

Level Of Service Computation Report
2000 HCM Operations Method (Future Volume Alternative)

Intersection #32 I-215 SB Off-Ramp & Murrieta Hot Springs Road

Cycle (sec): 100 Critical Vol./Cap.(X): 0.817
Loss Time (sec): 0 (Y+R=4.0 sec) Average Delay (sec/veh): 10.6
Optimal Cycle: 102 Level Of Service: B

Street Name:	I-215 SB Off-Ramp						Murrieta Hot Springs Road					
Approach:	North Bound			South Bound			East Bound			West Bound		
Movement:	L -	T -	R	L -	T -	R	L -	T -	R	L -	T -	R
Control:	Protected			Protected			Permitted			Permitted		
Rights:	Include			Include			Ignore			Ignore		
Min. Green:	0	0	0	0	0	0	0	0	0	0	0	0
Lanes:	0	0	0	0	0	1	0	1!	0	1	0	0
Volume Module:												
Base Vol:	0	0	0	454	0	377	0	3355	139	0	2497	238
Growth Adj:	1.00	1.00	1.00	1.00	1.00	1.00	1.00	1.00	1.00	1.00	1.00	1.00
Initial Bse:	0	0	0	454	0	377	0	3355	139	0	2497	238
Added Vol:	0	0	0	0	0	0	0	0	0	0	0	0
PasserByVol:	0	0	0	0	0	0	0	0	0	0	0	0
Initial Fut:	0	0	0	454	0	377	0	3355	139	0	2497	238
User Adj:	1.00	1.00	1.00	1.00	1.00	1.00	1.00	1.00	0.00	1.00	1.00	0.00
PHF Adj:	1.00	1.00	1.00	1.00	1.00	1.00	1.00	1.00	0.00	1.00	1.00	0.00
PHF Volume:	0	0	0	454	0	377	0	3355	0	0	2497	0
Reduct Vol:	0	0	0	0	0	0	0	0	0	0	0	0
Reduced Vol:	0	0	0	454	0	377	0	3355	0	0	2497	0
PCE Adj:	1.00	1.00	1.00	1.00	1.00	1.00	1.00	1.00	0.00	1.00	1.00	0.00
MLF Adj:	1.00	1.00	1.00	1.00	1.00	1.00	1.00	1.00	0.00	1.00	1.00	0.00
FinalVolume:	0	0	0	454	0	377	0	3355	0	0	2497	0
Saturation Flow Module:												
Sat/Lane:	1900	1900	1900	1900	1900	1900	1900	1900	1900	1900	1900	1900
Adjustment:	1.00	1.00	1.00	0.91	1.00	0.91	1.00	0.91	1.00	1.00	0.91	1.00
Lanes:	0.00	0.00	0.00	1.55	0.00	1.45	0.00	3.00	1.00	0.00	3.00	1.00
Final Sat.:	0	0	0	2664	0	2505	0	5187	1900	0	5187	1900
Capacity Analysis Module:												
Vol/Sat:	0.00	0.00	0.00	0.17	0.00	0.15	0.00	0.65	0.00	0.00	0.48	0.00
Crit Moves:				****				****				
Green/Cycle:	0.00	0.00	0.00	0.21	0.00	0.21	0.00	0.79	0.00	0.00	0.79	0.00
Volume/Cap:	0.00	0.00	0.00	0.82	0.00	0.72	0.00	0.82	0.00	0.00	0.61	0.00
Delay/Veh:	0.0	0.0	0.0	43.0	0.0	39.1	0.0	7.5	0.0	0.0	4.5	0.0
User DelAdj:	1.00	1.00	1.00	1.00	1.00	1.00	1.00	1.00	1.00	1.00	1.00	1.00
AdjDel/Veh:	0.0	0.0	0.0	43.0	0.0	39.1	0.0	7.5	0.0	0.0	4.5	0.0
LOS by Move:	A	A	A	D	A	D	A	A	A	A	A	A
HCM2kAvgQ:	0	0	0	11	0	9	0	24	0	0	12	0

Note: Queue reported is the number of cars per lane.

City of Murrieta General Plan
Existing General Plan
PM Peak Hour

Level Of Service Computation Report
2000 HCM Operations Method (Future Volume Alternative)

Intersection #33 I-215 NB Off-Ramp & Murrieta Hot Springs Road

Cycle (sec): 100 Critical Vol./Cap.(X): 0.653
Loss Time (sec): 0 (Y+R=4.0 sec) Average Delay (sec/veh): 9.5
Optimal Cycle: 54 Level Of Service: A

Street Name:	I-215 NB Off-Ramp						Murrieta Hot Springs Road					
Approach:	North Bound			South Bound			East Bound			West Bound		
Movement:	L	T	R	L	T	R	L	T	R	L	T	R
Control:	Protected			Protected			Permitted			Permitted		
Rights:	Include			Include			Ignore			Ignore		
Min. Green:	0	0	0	0	0	0	0	0	0	0	0	0
Lanes:	2	0 0	0 2	0	0 0	0 0	0	0 3	0 1	0	0 3	0 1
Volume Module:												
Base Vol:	82	0	479	0	0	0	0	2317	104	0	2514	1369
Growth Adj:	1.00	1.00	1.00	1.00	1.00	1.00	1.00	1.00	1.00	1.00	1.00	1.00
Initial Bse:	82	0	479	0	0	0	0	2317	104	0	2514	1369
Added Vol:	0	0	0	0	0	0	0	0	0	0	0	0
PasserByVol:	0	0	0	0	0	0	0	0	0	0	0	0
Initial Fut:	82	0	479	0	0	0	0	2317	104	0	2514	1369
User Adj:	1.00	1.00	1.00	1.00	1.00	1.00	1.00	1.00	0.00	1.00	1.00	0.00
PHF Adj:	1.00	1.00	1.00	1.00	1.00	1.00	1.00	1.00	0.00	1.00	1.00	0.00
PHF Volume:	82	0	479	0	0	0	0	2317	0	0	2514	0
Reduct Vol:	0	0	0	0	0	0	0	0	0	0	0	0
Reduced Vol:	82	0	479	0	0	0	0	2317	0	0	2514	0
PCE Adj:	1.00	1.00	1.00	1.00	1.00	1.00	1.00	1.00	0.00	1.00	1.00	0.00
MLF Adj:	1.00	1.00	1.00	1.00	1.00	1.00	1.00	1.00	0.00	1.00	1.00	0.00
FinalVolume:	82	0	479	0	0	0	0	2317	0	0	2514	0
Saturation Flow Module:												
Sat/Lane:	1900	1900	1900	1900	1900	1900	1900	1900	1900	1900	1900	1900
Adjustment:	0.92	1.00	0.75	1.00	1.00	1.00	1.00	0.91	1.00	1.00	0.91	1.00
Lanes:	2.00	0.00	2.00	0.00	0.00	0.00	0.00	3.00	1.00	0.00	3.00	1.00
Final Sat.:	3502	0	2842	0	0	0	0	5187	1900	0	5187	1900
Capacity Analysis Module:												
Vol/Sat:	0.02	0.00	0.17	0.00	0.00	0.00	0.00	0.45	0.00	0.00	0.48	0.00
Crit Moves:			****								****	
Green/Cycle:	0.26	0.00	0.26	0.00	0.00	0.00	0.00	0.74	0.00	0.00	0.74	0.00
Volume/Cap:	0.09	0.00	0.65	0.00	0.00	0.00	0.00	0.60	0.00	0.00	0.65	0.00
Delay/Veh:	28.2	0.0	35.2	0.0	0.0	0.0	0.0	6.3	0.0	0.0	6.9	0.0
User DelAdj:	1.00	1.00	1.00	1.00	1.00	1.00	1.00	1.00	1.00	1.00	1.00	1.00
AdjDel/Veh:	28.2	0.0	35.2	0.0	0.0	0.0	0.0	6.3	0.0	0.0	6.9	0.0
LOS by Move:	C	A	D	A	A	A	A	A	A	A	A	A
HCM2kAvgQ:	1	0	8	0	0	0	0	12	0	0	15	0

Note: Queue reported is the number of cars per lane.

City of Murrieta General Plan
Existing General Plan
PM Peak Hour

Level Of Service Computation Report
2000 HCM Operations Method (Future Volume Alternative)

Intersection #34 Jackson Avenue & Murrieta Hot Springs Road

Cycle (sec): 100 Critical Vol./Cap.(X): 0.569
Loss Time (sec): 0 (Y+R=4.0 sec) Average Delay (sec/veh): 9.1
Optimal Cycle: 53 Level Of Service: A

Street Name:	Jackson Avenue						Murrieta Hot Springs Road					
Approach:	North Bound			South Bound			East Bound			West Bound		
Movement:	L	T	R	L	T	R	L	T	R	L	T	R
Control:	Protected			Protected			Protected			Protected		
Rights:	Include			Include			Include			Include		
Min. Green:	0	0	0	0	0	0	0	0	0	0	0	0
Lanes:	2	0 0	0 2	0	0 0	0 0	0	0 3	0 1	1	0 3	0 0
Volume Module:												
Base Vol:	243	0	183	0	0	0	0	1896	62	205	2590	0
Growth Adj:	1.00	1.00	1.00	1.00	1.00	1.00	1.00	1.00	1.00	1.00	1.00	1.00
Initial Bse:	243	0	183	0	0	0	0	1896	62	205	2590	0
Added Vol:	0	0	0	0	0	0	0	0	0	0	0	0
PasserByVol:	0	0	0	0	0	0	0	0	0	0	0	0
Initial Fut:	243	0	183	0	0	0	0	1896	62	205	2590	0
User Adj:	1.00	1.00	1.00	1.00	1.00	1.00	1.00	1.00	1.00	1.00	1.00	1.00
PHF Adj:	1.00	1.00	1.00	1.00	1.00	1.00	1.00	1.00	1.00	1.00	1.00	1.00
PHF Volume:	243	0	183	0	0	0	0	1896	62	205	2590	0
Reduct Vol:	0	0	0	0	0	0	0	0	0	0	0	0
Reduced Vol:	243	0	183	0	0	0	0	1896	62	205	2590	0
PCE Adj:	1.00	1.00	1.00	1.00	1.00	1.00	1.00	1.00	1.00	1.00	1.00	1.00
MLF Adj:	1.00	1.00	1.00	1.00	1.00	1.00	1.00	1.00	1.00	1.00	1.00	1.00
FinalVolume:	243	0	183	0	0	0	0	1896	62	205	2590	0
Saturation Flow Module:												
Sat/Lane:	1900	1900	1900	1900	1900	1900	1900	1900	1900	1900	1900	1900
Adjustment:	0.92	1.00	0.75	1.00	1.00	1.00	1.00	0.91	0.85	0.95	0.91	1.00
Lanes:	2.00	0.00	2.00	0.00	0.00	0.00	0.00	3.00	1.00	1.00	3.00	0.00
Final Sat.:	3502	0	2842	0	0	0	0	5187	1615	1805	5187	0
Capacity Analysis Module:												
Vol/Sat:	0.07	0.00	0.06	0.00	0.00	0.00	0.00	0.37	0.04	0.11	0.50	0.00
Crit Moves:	****						****				****	
Green/Cycle:	0.12	0.00	0.12	0.00	0.00	0.00	0.00	0.67	0.67	0.21	0.88	0.00
Volume/Cap:	0.57	0.00	0.53	0.00	0.00	0.00	0.00	0.55	0.06	0.55	0.57	0.00
Delay/Veh:	43.2	0.0	42.7	0.0	0.0	0.0	0.0	8.8	5.7	37.0	1.7	0.0
User DelAdj:	1.00	1.00	1.00	1.00	1.00	1.00	1.00	1.00	1.00	1.00	1.00	1.00
AdjDel/Veh:	43.2	0.0	42.7	0.0	0.0	0.0	0.0	8.8	5.7	37.0	1.7	0.0
LOS by Move:	D	A	D	A	A	A	A	A	A	D	A	A
HCM2kAvgQ:	4	0	4	0	0	0	0	11	1	6	8	0

Note: Queue reported is the number of cars per lane.

City of Murrieta General Plan
Existing General Plan
PM Peak Hour

Level Of Service Computation Report
2000 HCM Operations Method (Future Volume Alternative)

Intersection #35 Margarita Road & Murrieta Hot Springs Road

Cycle (sec): 100 Critical Vol./Cap.(X): 1.016
Loss Time (sec): 0 (Y+R=4.0 sec) Average Delay (sec/veh): 50.5
Optimal Cycle: 180 Level Of Service: D

Street Name:	Margarita Road						Murrieta Hot Springs Road					
Approach:	North Bound			South Bound			East Bound			West Bound		
Movement:	L -	T -	R	L -	T -	R	L -	T -	R	L -	T -	R
Control:	Split Phase			Split Phase			Protected			Protected		
Rights:	Include			Include			Include			Include		
Min. Green:	0	0	0	0	0	0	0	0	0	0	0	0
Lanes:	2 0	1 0	1	0	1 0	0 1	1 0	2 1	0	1 0	2 1	0
Volume Module:												
Base Vol:	920	70	411	196	80	146	47	1676	506	302	1659	40
Growth Adj:	1.00	1.00	1.00	1.00	1.00	1.00	1.00	1.00	1.00	1.00	1.00	1.00
Initial Bse:	920	70	411	196	80	146	47	1676	506	302	1659	40
Added Vol:	0	0	0	0	0	0	0	0	0	0	0	0
PasserByVol:	0	0	0	0	0	0	0	0	0	0	0	0
Initial Fut:	920	70	411	196	80	146	47	1676	506	302	1659	40
User Adj:	1.00	1.00	1.00	1.00	1.00	1.00	1.00	1.00	1.00	1.00	1.00	1.00
PHF Adj:	1.00	1.00	1.00	1.00	1.00	1.00	1.00	1.00	1.00	1.00	1.00	1.00
PHF Volume:	920	70	411	196	80	146	47	1676	506	302	1659	40
Reduct Vol:	0	0	0	0	0	0	0	0	0	0	0	0
Reduced Vol:	920	70	411	196	80	146	47	1676	506	302	1659	40
PCE Adj:	1.00	1.00	1.00	1.00	1.00	1.00	1.00	1.00	1.00	1.00	1.00	1.00
MLF Adj:	1.00	1.00	1.00	1.00	1.00	1.00	1.00	1.00	1.00	1.00	1.00	1.00
FinalVolume:	920	70	411	196	80	146	47	1676	506	302	1659	40
Saturation Flow Module:												
Sat/Lane:	1900	1900	1900	1900	1900	1900	1900	1900	1900	1900	1900	1900
Adjustment:	0.92	1.00	0.85	0.97	0.97	0.85	0.95	0.88	0.88	0.95	0.91	0.91
Lanes:	2.00	1.00	1.00	0.71	0.29	1.00	1.00	2.30	0.70	1.00	2.93	0.07
Final Sat.:	3502	1900	1615	1303	532	1615	1805	3845	1161	1805	5045	122
Capacity Analysis Module:												
Vol/Sat:	0.26	0.04	0.25	0.15	0.15	0.09	0.03	0.44	0.44	0.17	0.33	0.33
Crit Moves:	****				****			****		****		
Green/Cycle:	0.26	0.26	0.26	0.15	0.15	0.15	0.04	0.43	0.43	0.16	0.55	0.55
Volume/Cap:	1.02	0.14	0.98	1.02	1.02	0.61	0.60	1.02	1.02	1.02	0.60	0.60
Delay/Veh:	71.1	28.7	76.7	101.5	101	44.5	59.0	52.2	52.2	98.2	15.4	15.4
User DelAdj:	1.00	1.00	1.00	1.00	1.00	1.00	1.00	1.00	1.00	1.00	1.00	1.00
AdjDel/Veh:	71.1	28.7	76.7	101.5	101	44.5	59.0	52.2	52.2	98.2	15.4	15.4
LOS by Move:	E	C	E	F	F	D	E	D	D	F	B	B
HCM2kAvgQ:	21	2	18	14	14	5	2	33	33	15	13	13

Note: Queue reported is the number of cars per lane.

City of Murrieta General Plan
Existing General Plan
PM Peak Hour

Level Of Service Computation Report
2000 HCM Operations Method (Future Volume Alternative)

Intersection #36 French Valley Parkway & Murrieta Hot Springs Road

Cycle (sec): 100 Critical Vol./Cap.(X): 0.790
Loss Time (sec): 0 (Y+R=4.0 sec) Average Delay (sec/veh): 17.6
Optimal Cycle: 108 Level Of Service: B

Street Name:	French Valley Parkway						Murrieta Hot Springs Road					
Approach:	North Bound			South Bound			East Bound			West Bound		
Movement:	L -	T -	R	L -	T -	R	L -	T -	R	L -	T -	R
Control:	Protected			Protected			Protected			Protected		
Rights:	Ovl			Include			Include			Include		
Min. Green:	0	0	0	0	0	0	0	0	0	0	0	0
Lanes:	1 0	0 0	2	0 0	0 0	0	0 0	2 1	0	1 0	3 0	0
Volume Module:												
Base Vol:	39	0	1065	0	0	0	0	1730	367	395	1715	0
Growth Adj:	1.00	1.00	1.00	1.00	1.00	1.00	1.00	1.00	1.00	1.00	1.00	1.00
Initial Bse:	39	0	1065	0	0	0	0	1730	367	395	1715	0
Added Vol:	0	0	0	0	0	0	0	0	0	0	0	0
PasserByVol:	0	0	0	0	0	0	0	0	0	0	0	0
Initial Fut:	39	0	1065	0	0	0	0	1730	367	395	1715	0
User Adj:	1.00	1.00	1.00	1.00	1.00	1.00	1.00	1.00	1.00	1.00	1.00	1.00
PHF Adj:	1.00	1.00	1.00	1.00	1.00	1.00	1.00	1.00	1.00	1.00	1.00	1.00
PHF Volume:	39	0	1065	0	0	0	0	1730	367	395	1715	0
Reduct Vol:	0	0	0	0	0	0	0	0	0	0	0	0
Reduced Vol:	39	0	1065	0	0	0	0	1730	367	395	1715	0
PCE Adj:	1.00	1.00	1.00	1.00	1.00	1.00	1.00	1.00	1.00	1.00	1.00	1.00
MLF Adj:	1.00	1.00	1.00	1.00	1.00	1.00	1.00	1.00	1.00	1.00	1.00	1.00
FinalVolume:	39	0	1065	0	0	0	0	1730	367	395	1715	0
Saturation Flow Module:												
Sat/Lane:	1900	1900	1900	1900	1900	1900	1900	1900	1900	1900	1900	1900
Adjustment:	0.95	1.00	0.75	1.00	1.00	1.00	1.00	0.89	0.89	0.95	0.91	1.00
Lanes:	1.00	0.00	2.00	0.00	0.00	0.00	0.00	2.47	0.53	1.00	3.00	0.00
Final Sat.:	1805	0	2842	0	0	0	0	4168	884	1805	5187	0
Capacity Analysis Module:												
Vol/Sat:	0.02	0.00	0.37	0.00	0.00	0.00	0.00	0.42	0.42	0.22	0.33	0.00
Crit Moves:			****					****		****		
Green/Cycle:	0.20	0.00	0.47	0.00	0.00	0.00	0.00	0.53	0.53	0.28	0.80	0.00
Volume/Cap:	0.11	0.00	0.79	0.00	0.00	0.00	0.00	0.79	0.79	0.79	0.41	0.00
Delay/Veh:	33.1	0.0	25.3	0.0	0.0	0.0	0.0	20.9	20.9	41.7	3.0	0.0
User DelAdj:	1.00	1.00	1.00	1.00	1.00	1.00	1.00	1.00	1.00	1.00	1.00	1.00
AdjDel/Veh:	33.1	0.0	25.3	0.0	0.0	0.0	0.0	20.9	20.9	41.7	3.0	0.0
LOS by Move:	C	A	C	A	A	A	A	C	C	D	A	A
HCM2kAvgQ:	1	0	17	0	0	0	0	21	21	13	6	0

Note: Queue reported is the number of cars per lane.

City of Murrieta General Plan
Existing General Plan
PM Peak Hour

Level Of Service Computation Report
2000 HCM Operations Method (Future Volume Alternative)

Intersection #37 Jefferson Avenue & Guava Street

Cycle (sec): 100 Critical Vol./Cap.(X): 0.759
Loss Time (sec): 0 (Y+R=4.0 sec) Average Delay (sec/veh): 7.9
Optimal Cycle: 77 Level Of Service: A

Street Name:	Jefferson Avenue						Guava Street					
Approach:	North Bound			South Bound			East Bound			West Bound		
Movement:	L -	T -	R	L -	T -	R	L -	T -	R	L -	T -	R
Control:	Protected			Protected			Permitted			Permitted		
Rights:	Include			Include			Include			Include		
Min. Green:	0	0	0	0	0	0	0	0	0	0	0	0
Lanes:	1 0	2 1	0	1 0	2 1	0	1 0	0 1	0	1 0	1 1	0
Volume Module:												
Base Vol:	19	3211	10	8	1077	377	99	81	148	1	27	4
Growth Adj:	1.00	1.00	1.00	1.00	1.00	1.00	1.00	1.00	1.00	1.00	1.00	1.00
Initial Bse:	19	3211	10	8	1077	377	99	81	148	1	27	4
Added Vol:	0	0	0	0	0	0	0	0	0	0	0	0
PasserByVol:	0	0	0	0	0	0	0	0	0	0	0	0
Initial Fut:	19	3211	10	8	1077	377	99	81	148	1	27	4
User Adj:	1.00	1.00	1.00	1.00	1.00	1.00	1.00	1.00	1.00	1.00	1.00	1.00
PHF Adj:	1.00	1.00	1.00	1.00	1.00	1.00	1.00	1.00	1.00	1.00	1.00	1.00
PHF Volume:	19	3211	10	8	1077	377	99	81	148	1	27	4
Reduct Vol:	0	0	0	0	0	0	0	0	0	0	0	0
Reduced Vol:	19	3211	10	8	1077	377	99	81	148	1	27	4
PCE Adj:	1.00	1.00	1.00	1.00	1.00	1.00	1.00	1.00	1.00	1.00	1.00	1.00
MLF Adj:	1.00	1.00	1.00	1.00	1.00	1.00	1.00	1.00	1.00	1.00	1.00	1.00
FinalVolume:	19	3211	10	8	1077	377	99	81	148	1	27	4
Saturation Flow Module:												
Sat/Lane:	1900	1900	1900	1900	1900	1900	1900	1900	1900	1900	1900	1900
Adjustment:	0.95	0.91	0.91	0.95	0.87	0.87	0.71	0.90	0.90	0.23	0.93	0.93
Lanes:	1.00	2.99	0.01	1.00	2.22	0.78	1.00	0.35	0.65	1.00	1.74	0.26
Final Sat.:	1805	5171	16	1805	3692	1292	1353	607	1109	431	3084	457
Capacity Analysis Module:												
Vol/Sat:	0.01	0.62	0.62	0.00	0.29	0.29	0.07	0.13	0.13	0.00	0.01	0.01
Crit Moves:		****		****				****				
Green/Cycle:	0.03	0.82	0.82	0.01	0.80	0.80	0.18	0.18	0.18	0.18	0.18	0.18
Volume/Cap:	0.37	0.76	0.76	0.76	0.37	0.37	0.42	0.76	0.76	0.01	0.05	0.05
Delay/Veh:	52.0	5.2	5.2	193.5	3.0	3.0	37.8	49.8	49.8	34.1	34.3	34.3
User DelAdj:	1.00	1.00	1.00	1.00	1.00	1.00	1.00	1.00	1.00	1.00	1.00	1.00
AdjDel/Veh:	52.0	5.2	5.2	193.5	3.0	3.0	37.8	49.8	49.8	34.1	34.3	34.3
LOS by Move:	D	A	A	F	A	A	D	D	D	C	C	C
HCM2kAvgQ:	1	19	19	1	5	5	3	9	9	0	0	0

Note: Queue reported is the number of cars per lane.

City of Murrieta General Plan
Existing General Plan
PM Peak Hour

Level Of Service Computation Report
2000 HCM Operations Method (Future Volume Alternative)

Intersection #39 Washington Ave & Calle Del Oso Oro/Nutmeg

Cycle (sec): 100 Critical Vol./Cap.(X): 0.522
Loss Time (sec): 0 (Y+R=4.0 sec) Average Delay (sec/veh): 27.2
Optimal Cycle: 48 Level Of Service: C

Street Name:	Washington Ave						Calle Del Oso Oro/Nutmeg					
Approach:	North Bound			South Bound			East Bound			West Bound		
Movement:	L -	T -	R	L -	T -	R	L -	T -	R	L -	T -	R
Control:	Protected			Protected			Protected			Protected		
Rights:	Include			Include			Include			Include		
Min. Green:	0	0	0	0	0	0	0	0	0	0	0	0
Lanes:	1 0	2 1	0	1 0	2 1	0	1 0	1 1	0	1 0	1 1	0
Volume Module:												
Base Vol:	375	257	150	105	234	49	23	229	268	175	613	148
Growth Adj:	1.00	1.00	1.00	1.00	1.00	1.00	1.00	1.00	1.00	1.00	1.00	1.00
Initial Bse:	375	257	150	105	234	49	23	229	268	175	613	148
Added Vol:	0	0	0	0	0	0	0	0	0	0	0	0
PasserByVol:	0	0	0	0	0	0	0	0	0	0	0	0
Initial Fut:	375	257	150	105	234	49	23	229	268	175	613	148
User Adj:	1.00	1.00	1.00	1.00	1.00	1.00	1.00	1.00	1.00	1.00	1.00	1.00
PHF Adj:	1.00	1.00	1.00	1.00	1.00	1.00	1.00	1.00	1.00	1.00	1.00	1.00
PHF Volume:	375	257	150	105	234	49	23	229	268	175	613	148
Reduct Vol:	0	0	0	0	0	0	0	0	0	0	0	0
Reduced Vol:	375	257	150	105	234	49	23	229	268	175	613	148
PCE Adj:	1.00	1.00	1.00	1.00	1.00	1.00	1.00	1.00	1.00	1.00	1.00	1.00
MLF Adj:	1.00	1.00	1.00	1.00	1.00	1.00	1.00	1.00	1.00	1.00	1.00	1.00
FinalVolume:	375	257	150	105	234	49	23	229	268	175	613	148
Saturation Flow Module:												
Sat/Lane:	1900	1900	1900	1900	1900	1900	1900	1900	1900	1900	1900	1900
Adjustment:	0.95	0.86	0.86	0.95	0.89	0.89	0.95	0.87	0.87	0.95	0.92	0.92
Lanes:	1.00	2.00	1.00	1.00	2.48	0.52	1.00	1.00	1.00	1.00	1.61	0.39
Final Sat.:	1805	3268	1634	1805	4177	875	1805	1659	1659	1805	2824	682
Capacity Analysis Module:												
Vol/Sat:	0.21	0.08	0.09	0.06	0.06	0.06	0.01	0.14	0.16	0.10	0.22	0.22
Crit Moves:	****				****				****	****		
Green/Cycle:	0.40	0.31	0.31	0.20	0.11	0.11	0.03	0.31	0.31	0.19	0.47	0.47
Volume/Cap:	0.52	0.25	0.30	0.30	0.52	0.52	0.46	0.45	0.52	0.52	0.46	0.46
Delay/Veh:	23.6	26.0	26.4	34.8	43.1	43.1	54.6	28.0	29.0	38.2	18.3	18.3
User DelAdj:	1.00	1.00	1.00	1.00	1.00	1.00	1.00	1.00	1.00	1.00	1.00	1.00
AdjDel/Veh:	23.6	26.0	26.4	34.8	43.1	43.1	54.6	28.0	29.0	38.2	18.3	18.3
LOS by Move:	C	C	C	C	D	D	D	C	C	D	B	B
HCM2kAvgQ:	9	3	4	3	4	4	1	6	8	5	8	8

Note: Queue reported is the number of cars per lane.

City of Murrieta General Plan
Existing General Plan
PM Peak Hour

Level Of Service Computation Report
2000 HCM Operations Method (Future Volume Alternative)

Intersection #40 Clinton Keith Rd & Calle de Oso Oro/Bear Creek Dr

Cycle (sec): 100 Critical Vol./Cap.(X): 0.644
Loss Time (sec): 0 (Y+R=4.0 sec) Average Delay (sec/veh): 16.2
Optimal Cycle: 52 Level Of Service: B

Street Name:	Clinton Keith Rd						Calle de Oso Oro/Bear Creek Dr					
Approach:	North Bound			South Bound			East Bound			West Bound		
Movement:	L - T - R			L - T - R			L - T - R			L - T - R		
Control:	Protected			Protected			Permitted			Permitted		
Rights:	Include			Include			Include			Include		
Min. Green:	0	0	0	0	0	0	0	0	0	0	0	0
Lanes:	1 0	1	1 0	1 0	1	1 0	1 0	0	1 0	1 0	1	1 0
Volume Module:												
Base Vol:	72	174	204	17	90	270	190	532	134	225	743	10
Growth Adj:	1.00	1.00	1.00	1.00	1.00	1.00	1.00	1.00	1.00	1.00	1.00	1.00
Initial Bse:	72	174	204	17	90	270	190	532	134	225	743	10
Added Vol:	0	0	0	0	0	0	0	0	0	0	0	0
PasserByVol:	0	0	0	0	0	0	0	0	0	0	0	0
Initial Fut:	72	174	204	17	90	270	190	532	134	225	743	10
User Adj:	1.00	1.00	1.00	1.00	1.00	1.00	1.00	1.00	1.00	1.00	1.00	1.00
PHF Adj:	1.00	1.00	1.00	1.00	1.00	1.00	1.00	1.00	1.00	1.00	1.00	1.00
PHF Volume:	72	174	204	17	90	270	190	532	134	225	743	10
Reduct Vol:	0	0	0	0	0	0	0	0	0	0	0	0
Reduced Vol:	72	174	204	17	90	270	190	532	134	225	743	10
PCE Adj:	1.00	1.00	1.00	1.00	1.00	1.00	1.00	1.00	1.00	1.00	1.00	1.00
MLF Adj:	1.00	1.00	1.00	1.00	1.00	1.00	1.00	1.00	1.00	1.00	1.00	1.00
FinalVolume:	72	174	204	17	90	270	190	532	134	225	743	10
Saturation Flow Module:												
Sat/Lane:	1900	1900	1900	1900	1900	1900	1900	1900	1900	1900	1900	1900
Adjustment:	0.95	0.87	0.87	0.95	0.84	0.84	0.33	0.97	0.97	0.27	0.95	0.95
Lanes:	1.00	1.00	1.00	1.00	1.00	1.00	1.00	0.80	0.20	1.00	1.97	0.03
Final Sat.:	1805	1659	1659	1805	1603	1603	619	1472	371	517	3555	48
Capacity Analysis Module:												
Vol/Sat:	0.04	0.10	0.12	0.01	0.06	0.17	0.31	0.36	0.36	0.44	0.21	0.21
Crit Moves:	****					****				****		
Green/Cycle:	0.06	0.30	0.30	0.02	0.26	0.26	0.68	0.68	0.68	0.68	0.68	0.68
Volume/Cap:	0.64	0.35	0.41	0.41	0.21	0.64	0.45	0.53	0.53	0.64	0.31	0.31
Delay/Veh:	58.0	27.5	28.2	54.6	28.9	35.4	8.3	8.7	8.7	13.4	6.7	6.7
User DelAdj:	1.00	1.00	1.00	1.00	1.00	1.00	1.00	1.00	1.00	1.00	1.00	1.00
AdjDel/Veh:	58.0	27.5	28.2	54.6	28.9	35.4	8.3	8.7	8.7	13.4	6.7	6.7
LOS by Move:	E	C	C	D	C	D	A	A	A	B	A	A
HCM2kAvgQ:	3	5	5	1	2	9	3	11	11	5	5	5

Note: Queue reported is the number of cars per lane.

City of Murrieta General Plan
Existing General Plan
PM Peak Hour

Level Of Service Computation Report
2000 HCM Operations Method (Future Volume Alternative)

Intersection #43 Jefferson Ave & Lemon St

Cycle (sec): 100 Critical Vol./Cap.(X): 0.615
Loss Time (sec): 0 (Y+R=4.0 sec) Average Delay (sec/veh): 13.7
Optimal Cycle: 59 Level Of Service: B

Street Name:	Jefferson Ave						Lemon St					
Approach:	North Bound			South Bound			East Bound			West Bound		
Movement:	L - T - R			L - T - R			L - T - R			L - T - R		
Control:	Protected			Protected			Protected			Protected		
Rights:	Include			Include			Include			Include		
Min. Green:	0	0	0	0	0	0	0	0	0	0	0	0
Lanes:	1 0	2	1 0	1 0	2	1 0	1 0	1	0 1	1 0	0	1 0
Volume Module:												
Base Vol:	288	2116	2	6	1657	32	35	32	193	16	17	16
Growth Adj:	1.00	1.00	1.00	1.00	1.00	1.00	1.00	1.00	1.00	1.00	1.00	1.00
Initial Bse:	288	2116	2	6	1657	32	35	32	193	16	17	16
Added Vol:	0	0	0	0	0	0	0	0	0	0	0	0
PasserByVol:	0	0	0	0	0	0	0	0	0	0	0	0
Initial Fut:	288	2116	2	6	1657	32	35	32	193	16	17	16
User Adj:	1.00	1.00	1.00	1.00	1.00	1.00	1.00	1.00	1.00	1.00	1.00	1.00
PHF Adj:	1.00	1.00	1.00	1.00	1.00	1.00	1.00	1.00	1.00	1.00	1.00	1.00
PHF Volume:	288	2116	2	6	1657	32	35	32	193	16	17	16
Reduct Vol:	0	0	0	0	0	0	0	0	0	0	0	0
Reduced Vol:	288	2116	2	6	1657	32	35	32	193	16	17	16
PCE Adj:	1.00	1.00	1.00	1.00	1.00	1.00	1.00	1.00	1.00	1.00	1.00	1.00
MLF Adj:	1.00	1.00	1.00	1.00	1.00	1.00	1.00	1.00	1.00	1.00	1.00	1.00
FinalVolume:	288	2116	2	6	1657	32	35	32	193	16	17	16
Saturation Flow Module:												
Sat/Lane:	1900	1900	1900	1900	1900	1900	1900	1900	1900	1900	1900	1900
Adjustment:	0.95	0.91	0.91	0.95	0.91	0.91	0.95	1.00	0.85	0.95	0.93	0.93
Lanes:	1.00	2.99	0.01	1.00	2.94	0.06	1.00	1.00	1.00	1.00	0.52	0.48
Final Sat.:	1805	5182	5	1805	5073	98	1805	1900	1615	1805	907	854
Capacity Analysis Module:												
Vol/Sat:	0.16	0.41	0.41	0.00	0.33	0.33	0.02	0.02	0.12	0.01	0.02	0.02
Crit Moves:	****				****				****	****		
Green/Cycle:	0.26	0.78	0.78	0.01	0.53	0.53	0.11	0.19	0.19	0.01	0.10	0.10
Volume/Cap:	0.61	0.52	0.52	0.52	0.61	0.61	0.18	0.09	0.61	0.61	0.18	0.18
Delay/Veh:	35.0	4.0	4.0	86.1	16.7	16.7	41.2	33.1	40.5	85.7	41.5	41.5
User DelAdj:	1.00	1.00	1.00	1.00	1.00	1.00	1.00	1.00	1.00	1.00	1.00	1.00
AdjDel/Veh:	35.0	4.0	4.0	86.1	16.7	16.7	41.2	33.1	40.5	85.7	41.5	41.5
LOS by Move:	D	A	A	F	B	B	D	C	D	F	D	D
HCM2kAvgQ:	9	9	9	1	14	14	1	1	6	1	1	1

Note: Queue reported is the number of cars per lane.

City of Murrieta General Plan
Existing General Plan
PM Peak Hour

Level Of Service Computation Report
2000 HCM Operations Method (Future Volume Alternative)

Intersection #44 Jefferson Ave & Kalmia St

Cycle (sec): 100 | Critical Vol./Cap.(X): 1.534
Loss Time (sec): 0 (Y+R=4.0 sec) | Average Delay (sec/veh): 129.1
Optimal Cycle: 180 | Level Of Service: F

Street Name:	Jefferson Ave						Kalmia St					
Approach:	North Bound			South Bound			East Bound			West Bound		
Movement:	L - T - R			L - T - R			L - T - R			L - T - R		
Control:	Protected			Protected			Protected			Protected		
Rights:	Include			Include			Include			Include		
Min. Green:	0	0	0	0	0	0	0	0	0	0	0	0
Lanes:	2 0	3 0	1	1 0	2 1	0	1 0	2 1	0	1 0	1 1	0
Volume Module:												
Base Vol:	375	1717	938	863	1193	28	28	553	266	308	429	750
Growth Adj:	1.00	1.00	1.00	1.00	1.00	1.00	1.00	1.00	1.00	1.00	1.00	1.00
Initial Bse:	375	1717	938	863	1193	28	28	553	266	308	429	750
Added Vol:	0	0	0	0	0	0	0	0	0	0	0	0
PasserByVol:	0	0	0	0	0	0	0	0	0	0	0	0
Initial Fut:	375	1717	938	863	1193	28	28	553	266	308	429	750
User Adj:	1.00	1.00	1.00	1.00	1.00	1.00	1.00	1.00	1.00	1.00	1.00	1.00
PHF Adj:	1.00	1.00	1.00	1.00	1.00	1.00	1.00	1.00	1.00	1.00	1.00	1.00
PHF Volume:	375	1717	938	863	1193	28	28	553	266	308	429	750
Reduct Vol:	0	0	0	0	0	0	0	0	0	0	0	0
Reduced Vol:	375	1717	938	863	1193	28	28	553	266	308	429	750
PCE Adj:	1.00	1.00	1.00	1.00	1.00	1.00	1.00	1.00	1.00	1.00	1.00	1.00
MLF Adj:	1.00	1.00	1.00	1.00	1.00	1.00	1.00	1.00	1.00	1.00	1.00	1.00
FinalVolume:	375	1717	938	863	1193	28	28	553	266	308	429	750
Saturation Flow Module:												
Sat/Lane:	1900	1900	1900	1900	1900	1900	1900	1900	1900	1900	1900	1900
Adjustment:	0.92	0.91	0.85	0.95	0.91	0.91	0.95	0.87	0.87	0.95	0.86	0.86
Lanes:	2.00	3.00	1.00	1.00	2.93	0.07	1.00	2.03	0.97	1.00	1.00	1.00
Final Sat.:	3502	5187	1615	1805	5053	119	1805	3331	1602	1805	1634	1634
Capacity Analysis Module:												
Vol/Sat:	0.11	0.33	0.58	0.48	0.24	0.24	0.02	0.17	0.17	0.17	0.26	0.46
Crit Moves:			****	****			****					****
Green/Cycle:	0.22	0.38	0.38	0.31	0.48	0.48	0.01	0.15	0.15	0.16	0.30	0.30
Volume/Cap:	0.50	0.87	1.53	1.53	0.50	0.50	1.53	1.09	1.09	1.09	0.88	1.53
Delay/Veh:	35.0	33.5	279.3	283.4	18.2	18.2	456.7	102	101.6	121.1	40.1	281.7
User DelAdj:	1.00	1.00	1.00	1.00	1.00	1.00	1.00	1.00	1.00	1.00	1.00	1.00
AdjDel/Veh:	35.0	33.5	279.3	283.4	18.2	18.2	456.7	102	101.6	121.1	40.1	281.7
LOS by Move:	C	C	F	F	B	B	F	F	F	F	D	F
HCM2kAvgQ:	6	21	70	64	10	10	3	16	16	17	16	59

Note: Queue reported is the number of cars per lane.

City of Murrieta General Plan
Existing General Plan
PM Peak Hour

Level Of Service Computation Report
2000 HCM Operations Method (Future Volume Alternative)

Intersection #45 Jefferson Ave & Juniper St

Cycle (sec): 100 | Critical Vol./Cap.(X): 0.781
Loss Time (sec): 0 (Y+R=4.0 sec) | Average Delay (sec/veh): 15.5
Optimal Cycle: 104 | Level Of Service: B

Street Name:	Jefferson Ave						Juniper St					
Approach:	North Bound			South Bound			East Bound			West Bound		
Movement:	L - T - R			L - T - R			L - T - R			L - T - R		
Control:	Protected			Protected			Protected			Protected		
Rights:	Include			Include			Include			Include		
Min. Green:	0	0	0	0	0	0	0	0	0	0	0	0
Lanes:	1 0	2 1	0	1 0	2 1	0	1 0	1 1	0	1 0	1 1	0
Volume Module:												
Base Vol:	76	2804	103	67	1622	36	168	68	203	33	48	140
Growth Adj:	1.00	1.00	1.00	1.00	1.00	1.00	1.00	1.00	1.00	1.00	1.00	1.00
Initial Bse:	76	2804	103	67	1622	36	168	68	203	33	48	140
Added Vol:	0	0	0	0	0	0	0	0	0	0	0	0
PasserByVol:	0	0	0	0	0	0	0	0	0	0	0	0
Initial Fut:	76	2804	103	67	1622	36	168	68	203	33	48	140
User Adj:	1.00	1.00	1.00	1.00	1.00	1.00	1.00	1.00	1.00	1.00	1.00	1.00
PHF Adj:	1.00	1.00	1.00	1.00	1.00	1.00	1.00	1.00	1.00	1.00	1.00	1.00
PHF Volume:	76	2804	103	67	1622	36	168	68	203	33	48	140
Reduct Vol:	0	0	0	0	0	0	0	0	0	0	0	0
Reduced Vol:	76	2804	103	67	1622	36	168	68	203	33	48	140
PCE Adj:	1.00	1.00	1.00	1.00	1.00	1.00	1.00	1.00	1.00	1.00	1.00	1.00
MLF Adj:	1.00	1.00	1.00	1.00	1.00	1.00	1.00	1.00	1.00	1.00	1.00	1.00
FinalVolume:	76	2804	103	67	1622	36	168	68	203	33	48	140
Saturation Flow Module:												
Sat/Lane:	1900	1900	1900	1900	1900	1900	1900	1900	1900	1900	1900	1900
Adjustment:	0.95	0.91	0.91	0.95	0.91	0.91	0.95	0.84	0.84	0.95	0.84	0.84
Lanes:	1.00	2.89	0.11	1.00	2.93	0.07	1.00	1.00	1.00	1.00	1.00	1.00
Final Sat.:	1805	4978	183	1805	5059	112	1805	1603	1603	1805	1603	1603
Capacity Analysis Module:												
Vol/Sat:	0.04	0.56	0.56	0.04	0.32	0.32	0.09	0.04	0.13	0.02	0.03	0.09
Crit Moves:		****		****			****					****
Green/Cycle:	0.09	0.72	0.72	0.05	0.68	0.68	0.12	0.20	0.20	0.03	0.11	0.11
Volume/Cap:	0.47	0.78	0.78	0.78	0.47	0.47	0.78	0.21	0.63	0.63	0.27	0.78
Delay/Veh:	45.5	10.0	10.0	82.9	7.7	7.7	59.4	33.3	39.4	69.6	40.9	58.3
User DelAdj:	1.00	1.00	1.00	1.00	1.00	1.00	1.00	1.00	1.00	1.00	1.00	1.00
AdjDel/Veh:	45.5	10.0	10.0	82.9	7.7	7.7	59.4	33.3	39.4	69.6	40.9	58.3
LOS by Move:	D	A	A	F	A	A	E	C	D	E	D	E
HCM2kAvgQ:	3	22	22	4	9	9	7	2	7	2	2	6

Note: Queue reported is the number of cars per lane.

City of Murrieta General Plan
Existing General Plan
PM Peak Hour

Level Of Service Computation Report
2000 HCM Operations Method (Future Volume Alternative)

Intersection #46 Jefferson Ave & Ivy St/Los Alamos Rd

Cycle (sec): 100 Critical Vol./Cap.(X): 0.909
Loss Time (sec): 0 (Y+R=4.0 sec) Average Delay (sec/veh): 30.9
Optimal Cycle: 180 Level Of Service: C

Street Name:	Jefferson Ave						Ivy St/Los Alamos Rd					
Approach:	North Bound			South Bound			East Bound			West Bound		
Movement:	L -	T -	R	L -	T -	R	L -	T -	R	L -	T -	R
Control:	Protected			Protected			Protected			Protected		
Rights:	Include			Include			Include			Include		
Min. Green:	0	0	0	0	0	0	0	0	0	0	0	0
Lanes:	2 0	3 0	1	2 0	3 0	1	1 0	1 1	0	1 0	1 1	0
Volume Module:												
Base Vol:	172	2384	604	424	1349	66	81	179	149	211	139	452
Growth Adj:	1.00	1.00	1.00	1.00	1.00	1.00	1.00	1.00	1.00	1.00	1.00	1.00
Initial Bse:	172	2384	604	424	1349	66	81	179	149	211	139	452
Added Vol:	0	0	0	0	0	0	0	0	0	0	0	0
PasserByVol:	0	0	0	0	0	0	0	0	0	0	0	0
Initial Fut:	172	2384	604	424	1349	66	81	179	149	211	139	452
User Adj:	1.00	1.00	1.00	1.00	1.00	1.00	1.00	1.00	1.00	1.00	1.00	1.00
PHF Adj:	1.00	1.00	1.00	1.00	1.00	1.00	1.00	1.00	1.00	1.00	1.00	1.00
PHF Volume:	172	2384	604	424	1349	66	81	179	149	211	139	452
Reduct Vol:	0	0	0	0	0	0	0	0	0	0	0	0
Reduced Vol:	172	2384	604	424	1349	66	81	179	149	211	139	452
PCE Adj:	1.00	1.00	1.00	1.00	1.00	1.00	1.00	1.00	1.00	1.00	1.00	1.00
MLF Adj:	1.00	1.00	1.00	1.00	1.00	1.00	1.00	1.00	1.00	1.00	1.00	1.00
FinalVolume:	172	2384	604	424	1349	66	81	179	149	211	139	452
Saturation Flow Module:												
Sat/Lane:	1900	1900	1900	1900	1900	1900	1900	1900	1900	1900	1900	1900
Adjustment:	0.92	0.91	0.85	0.92	0.91	0.85	0.95	0.89	0.89	0.95	0.84	0.84
Lanes:	2.00	3.00	1.00	2.00	3.00	1.00	1.00	1.09	0.91	1.00	1.00	1.00
Final Sat.:	3502	5187	1615	3502	5187	1615	1805	1836	1528	1805	1597	1597
Capacity Analysis Module:												
Vol/Sat:	0.05	0.46	0.37	0.12	0.26	0.04	0.04	0.10	0.10	0.12	0.09	0.28
Crit Moves:		****		****			****					****
Green/Cycle:	0.10	0.51	0.51	0.13	0.54	0.54	0.05	0.16	0.16	0.20	0.31	0.31
Volume/Cap:	0.48	0.91	0.74	0.91	0.48	0.08	0.91	0.59	0.59	0.59	0.28	0.91
Delay/Veh:	43.5	27.8	23.1	64.2	14.6	11.2	113.2	40.5	40.5	39.2	26.0	49.8
User DelAdj:	1.00	1.00	1.00	1.00	1.00	1.00	1.00	1.00	1.00	1.00	1.00	1.00
AdjDel/Veh:	43.5	27.8	23.1	64.2	14.6	11.2	113.2	40.5	40.5	39.2	26.0	49.8
LOS by Move:	D	C	C	E	B	B	F	D	D	D	C	D
HCM2kAvgQ:	3	28	16	10	10	1	5	6	6	7	3	18

Note: Queue reported is the number of cars per lane.

City of Murrieta General Plan
Existing General Plan
PM Peak Hour

Level Of Service Computation Report
2000 HCM Operations Method (Future Volume Alternative)

Intersection #48 Madison Ave/I-15 SB Ramps & Kalmia St

Cycle (sec): 100 Critical Vol./Cap.(X): 0.871
Loss Time (sec): 0 (Y+R=4.0 sec) Average Delay (sec/veh): 30.4
Optimal Cycle: 177 Level Of Service: C

Street Name:	Madison Ave/I-15 SB Ramps						Kalmia St					
Approach:	North Bound			South Bound			East Bound			West Bound		
Movement:	L -	T -	R	L -	T -	R	L -	T -	R	L -	T -	R
Control:	Protected			Protected			Protected			Protected		
Rights:	Include			Include			Include			Include		
Min. Green:	0	0	0	0	0	0	0	0	0	0	0	0
Lanes:	2 0	0 0	2	2 0	1 1	0	0 0	3 1	0	2 0	2 1	1
Volume Module:												
Base Vol:	365	0	904	315	30	362	0	2375	260	267	1344	623
Growth Adj:	1.00	1.00	1.00	1.00	1.00	1.00	1.00	1.00	1.00	1.00	1.00	1.00
Initial Bse:	365	0	904	315	30	362	0	2375	260	267	1344	623
Added Vol:	0	0	0	0	0	0	0	0	0	0	0	0
PasserByVol:	0	0	0	0	0	0	0	0	0	0	0	0
Initial Fut:	365	0	904	315	30	362	0	2375	260	267	1344	623
User Adj:	1.00	1.00	1.00	1.00	1.00	1.00	1.00	1.00	1.00	1.00	1.00	1.00
PHF Adj:	1.00	1.00	1.00	1.00	1.00	1.00	1.00	1.00	1.00	1.00	1.00	1.00
PHF Volume:	365	0	904	315	30	362	0	2375	260	267	1344	623
Reduct Vol:	0	0	0	0	0	0	0	0	0	0	0	0
Reduced Vol:	365	0	904	315	30	362	0	2375	260	267	1344	623
PCE Adj:	1.00	1.00	1.00	1.00	1.00	1.00	1.00	1.00	1.00	1.00	1.00	1.00
MLF Adj:	1.00	1.00	1.00	1.00	1.00	1.00	1.00	1.00	1.00	1.00	1.00	1.00
FinalVolume:	365	0	904	315	30	362	0	2375	260	267	1344	623
Saturation Flow Module:												
Sat/Lane:	1900	1900	1900	1900	1900	1900	1900	1900	1900	1900	1900	1900
Adjustment:	0.92	1.00	0.75	0.92	0.82	0.82	1.00	0.90	0.90	0.92	0.87	0.87
Lanes:	2.00	0.00	2.00	2.00	1.00	1.00	0.00	3.61	0.39	2.00	2.73	1.27
Final Sat.:	3502	0	2842	3502	1556	1556	0	6140	672	3502	4499	2085
Capacity Analysis Module:												
Vol/Sat:	0.10	0.00	0.32	0.09	0.02	0.23	0.00	0.39	0.39	0.08	0.30	0.30
Crit Moves:			****	****				****		****		
Green/Cycle:	0.14	0.00	0.37	0.10	0.32	0.32	0.00	0.44	0.44	0.09	0.53	0.53
Volume/Cap:	0.72	0.00	0.87	0.87	0.06	0.72	0.00	0.87	0.87	0.87	0.56	0.56
Delay/Veh:	45.8	0.0	37.7	64.1	23.3	34.5	0.0	28.2	28.2	67.7	15.9	15.9
User DelAdj:	1.00	1.00	1.00	1.00	1.00	1.00	1.00	1.00	1.00	1.00	1.00	1.00
AdjDel/Veh:	45.8	0.0	37.7	64.1	23.3	34.5	0.0	28.2	28.2	67.7	15.9	15.9
LOS by Move:	D	A	D	E	C	C	A	C	C	E	B	B
HCM2kAvgQ:	7	0	18	8	1	12	0	23	23	7	11	11

Note: Queue reported is the number of cars per lane.

City of Murrieta General Plan
Existing General Plan
PM Peak Hour

Level Of Service Computation Report
2000 HCM Operations Method (Future Volume Alternative)

Intersection #50 Hancock Ave & Murrieta Hot Springs Rd

Cycle (sec): 100 | Critical Vol./Cap.(X): 0.850
Loss Time (sec): 0 (Y+R=4.0 sec) | Average Delay (sec/veh): 19.0
Optimal Cycle: 152 | Level Of Service: B

Street Name:	Hancock Ave						Murrieta Hot Springs Rd					
Approach:	North Bound			South Bound			East Bound			West Bound		
Movement:	L -	T -	R	L -	T -	R	L -	T -	R	L -	T -	R
Control:	Protected			Protected			Protected			Protected		
Rights:	Include			Ovl			Include			Include		
Min. Green:	0	0	0	0	0	0	0	0	0	0	0	0
Lanes:	0 0	0 0	0	2 0	0 0	2	2 0	4 0	0	0 0	3 1	0
Volume Module:												
Base Vol:	0	0	0	593	0	886	869	3294	0	0	2591	343
Growth Adj:	1.00	1.00	1.00	1.00	1.00	1.00	1.00	1.00	1.00	1.00	1.00	1.00
Initial Bse:	0	0	0	593	0	886	869	3294	0	0	2591	343
Added Vol:	0	0	0	0	0	0	0	0	0	0	0	0
PasserByVol:	0	0	0	0	0	0	0	0	0	0	0	0
Initial Fut:	0	0	0	593	0	886	869	3294	0	0	2591	343
User Adj:	1.00	1.00	1.00	1.00	1.00	1.00	1.00	1.00	1.00	1.00	1.00	1.00
PHF Adj:	1.00	1.00	1.00	1.00	1.00	1.00	1.00	1.00	1.00	1.00	1.00	1.00
PHF Volume:	0	0	0	593	0	886	869	3294	0	0	2591	343
Reduct Vol:	0	0	0	0	0	0	0	0	0	0	0	0
Reduced Vol:	0	0	0	593	0	886	869	3294	0	0	2591	343
PCE Adj:	1.00	1.00	1.00	1.00	1.00	1.00	1.00	1.00	1.00	1.00	1.00	1.00
MLF Adj:	1.00	1.00	1.00	1.00	1.00	1.00	1.00	1.00	1.00	1.00	1.00	1.00
FinalVolume:	0	0	0	593	0	886	869	3294	0	0	2591	343
Saturation Flow Module:												
Sat/Lane:	1900	1900	1900	1900	1900	1900	1900	1900	1900	1900	1900	1900
Adjustment:	1.00	1.00	1.00	0.92	1.00	0.75	0.92	0.91	1.00	1.00	0.89	0.89
Lanes:	0.00	0.00	0.00	2.00	0.00	2.00	2.00	4.00	0.00	0.00	3.53	0.47
Final Sat.:	0	0	0	3502	0	2842	3502	6916	0	0	5998	794
Capacity Analysis Module:												
Vol/Sat:	0.00	0.00	0.00	0.17	0.00	0.31	0.25	0.48	0.00	0.00	0.43	0.43
Crit Moves:				****			****				****	
Green/Cycle:	0.00	0.00	0.00	0.20	0.00	0.49	0.29	0.80	0.00	0.00	0.51	0.51
Volume/Cap:	0.00	0.00	0.00	0.85	0.00	0.63	0.85	0.59	0.00	0.00	0.85	0.85
Delay/Veh:	0.0	0.0	0.0	48.3	0.0	19.8	40.2	4.0	0.0	0.0	23.4	23.4
User DelAdj:	1.00	1.00	1.00	1.00	1.00	1.00	1.00	1.00	1.00	1.00	1.00	1.00
AdjDel/Veh:	0.0	0.0	0.0	48.3	0.0	19.8	40.2	4.0	0.0	0.0	23.4	23.4
LOS by Move:	A	A	A	D	A	B	D	A	A	A	C	C
HCM2kAvgQ:	0	0	0	12	0	12	16	11	0	0	24	24

Note: Queue reported is the number of cars per lane.

City of Murrieta General Plan
Existing General Plan
PM Peak Hour

Level Of Service Computation Report
2000 HCM Operations Method (Future Volume Alternative)

Intersection #51 Alta Murrieta Dr & Murrieta Hot Springs Rd

Cycle (sec): 100 | Critical Vol./Cap.(X): 1.024
Loss Time (sec): 0 (Y+R=4.0 sec) | Average Delay (sec/veh): 53.7
Optimal Cycle: 180 | Level Of Service: D

Street Name:	Alta Murrieta Dr						Murrieta Hot Springs Rd					
Approach:	North Bound			South Bound			East Bound			West Bound		
Movement:	L -	T -	R	L -	T -	R	L -	T -	R	L -	T -	R
Control:	Protected			Protected			Protected			Protected		
Rights:	Include			Include			Include			Ovl		
Min. Green:	0	0	0	0	0	0	0	0	0	0	0	0
Lanes:	2 0	1 0	1	2 0	1 1	0	2 0	2 1	0	2 0	4 0	1
Volume Module:												
Base Vol:	597	213	51	187	123	492	691	1712	523	173	2399	150
Growth Adj:	1.00	1.00	1.00	1.00	1.00	1.00	1.00	1.00	1.00	1.00	1.00	1.00
Initial Bse:	597	213	51	187	123	492	691	1712	523	173	2399	150
Added Vol:	0	0	0	0	0	0	0	0	0	0	0	0
PasserByVol:	0	0	0	0	0	0	0	0	0	0	0	0
Initial Fut:	597	213	51	187	123	492	691	1712	523	173	2399	150
User Adj:	1.00	1.00	1.00	1.00	1.00	1.00	1.00	1.00	1.00	1.00	1.00	1.00
PHF Adj:	1.00	1.00	1.00	1.00	1.00	1.00	1.00	1.00	1.00	1.00	1.00	1.00
PHF Volume:	597	213	51	187	123	492	691	1712	523	173	2399	150
Reduct Vol:	0	0	0	0	0	0	0	0	0	0	0	0
Reduced Vol:	597	213	51	187	123	492	691	1712	523	173	2399	150
PCE Adj:	1.00	1.00	1.00	1.00	1.00	1.00	1.00	1.00	1.00	1.00	1.00	1.00
MLF Adj:	1.00	1.00	1.00	1.00	1.00	1.00	1.00	1.00	1.00	1.00	1.00	1.00
FinalVolume:	597	213	51	187	123	492	691	1712	523	173	2399	150
Saturation Flow Module:												
Sat/Lane:	1900	1900	1900	1900	1900	1900	1900	1900	1900	1900	1900	1900
Adjustment:	0.92	1.00	0.85	0.92	0.84	0.84	0.92	0.88	0.88	0.92	0.91	0.85
Lanes:	2.00	1.00	1.00	2.00	1.00	1.00	2.00	2.30	0.70	2.00	4.00	1.00
Final Sat.:	3502	1900	1615	3502	1588	1588	3502	3834	1171	3502	6916	1615
Capacity Analysis Module:												
Vol/Sat:	0.17	0.11	0.03	0.05	0.08	0.31	0.20	0.45	0.45	0.05	0.35	0.09
Crit Moves:	****					****	****				****	
Green/Cycle:	0.17	0.32	0.32	0.15	0.30	0.30	0.19	0.48	0.48	0.05	0.34	0.49
Volume/Cap:	1.02	0.35	0.10	0.35	0.26	1.02	1.02	0.93	0.93	0.93	1.02	0.19
Delay/Veh:	85.3	26.6	24.1	38.5	26.4	78.0	81.4	32.1	32.1	94.4	58.2	14.5
User DelAdj:	1.00	1.00	1.00	1.00	1.00	1.00	1.00	1.00	1.00	1.00	1.00	1.00
AdjDel/Veh:	85.3	26.6	24.1	38.5	26.4	78.0	81.4	32.1	32.1	94.4	58.2	14.5
LOS by Move:	F	C	C	D	C	E	F	C	C	F	E	B
HCM2kAvgQ:	15	5	1	3	3	23	17	29	29	5	28	3

Note: Queue reported is the number of cars per lane.

City of Murrieta General Plan
Existing General Plan
PM Peak Hour

Level Of Service Computation Report
2000 HCM Operations Method (Future Volume Alternative)

Intersection #52 Winchester Road - SR-79 & Murrieta Hot Springs Rd

Cycle (sec): 100 Critical Vol./Cap.(X): 1.314
Loss Time (sec): 0 (Y+R=4.0 sec) Average Delay (sec/veh): 91.7
Optimal Cycle: 180 Level Of Service: F

Street Name:	Winchester Road - SR-79						Murrieta Hot Springs Rd					
Approach:	North Bound			South Bound			East Bound			West Bound		
Movement:	L -	T -	R	L -	T -	R	L -	T -	R	L -	T -	R
Control:	Protected			Protected			Protected			Protected		
Rights:	Ovl			Include			Include			Include		
Min. Green:	0	0	0	0	0	0	0	0	0	0	0	0
Lanes:	2 0	3 0	1	2 0	3 0	1	2 0	3 0	1	2 0	2 1	0
Volume Module:												
Base Vol:	328	2015	202	194	1225	1054	1397	989	283	273	758	104
Growth Adj:	1.00	1.00	1.00	1.00	1.00	1.00	1.00	1.00	1.00	1.00	1.00	1.00
Initial Bse:	328	2015	202	194	1225	1054	1397	989	283	273	758	104
Added Vol:	0	0	0	0	0	0	0	0	0	0	0	0
PasserByVol:	0	0	0	0	0	0	0	0	0	0	0	0
Initial Fut:	328	2015	202	194	1225	1054	1397	989	283	273	758	104
User Adj:	1.00	1.00	1.00	1.00	1.00	1.00	1.00	1.00	1.00	1.00	1.00	1.00
PHF Adj:	1.00	1.00	1.00	1.00	1.00	1.00	1.00	1.00	1.00	1.00	1.00	1.00
PHF Volume:	328	2015	202	194	1225	1054	1397	989	283	273	758	104
Reduct Vol:	0	0	0	0	0	0	0	0	0	0	0	0
Reduced Vol:	328	2015	202	194	1225	1054	1397	989	283	273	758	104
PCE Adj:	1.00	1.00	1.00	1.00	1.00	1.00	1.00	1.00	1.00	1.00	1.00	1.00
MLF Adj:	1.00	1.00	1.00	1.00	1.00	1.00	1.00	1.00	1.00	1.00	1.00	1.00
FinalVolume:	328	2015	202	194	1225	1054	1397	989	283	273	758	104
Saturation Flow Module:												
Sat/Lane:	1900	1900	1900	1900	1900	1900	1900	1900	1900	1900	1900	1900
Adjustment:	0.92	0.91	0.85	0.92	0.91	0.85	0.92	0.91	0.85	0.92	0.89	0.89
Lanes:	2.00	3.00	1.00	2.00	3.00	1.00	2.00	3.00	1.00	2.00	2.64	0.36
Final Sat.:	3502	5187	1615	3502	5187	1615	3502	5187	1615	3502	4479	615
Capacity Analysis Module:												
Vol/Sat:	0.09	0.39	0.13	0.06	0.24	0.65	0.40	0.19	0.18	0.08	0.17	0.17
Crit Moves:	****					****	****				****	
Green/Cycle:	0.07	0.50	0.62	0.07	0.50	0.50	0.30	0.31	0.31	0.13	0.13	0.13
Volume/Cap:	1.31	0.78	0.20	0.78	0.48	1.31	1.31	0.62	0.57	0.62	1.31	1.31
Delay/Veh:	213.5	22.3	8.3	60.5	16.7	175.5	183.1	30.5	30.7	44.2	196	195.7
User DelAdj:	1.00	1.00	1.00	1.00	1.00	1.00	1.00	1.00	1.00	1.00	1.00	1.00
AdjDel/Veh:	213.5	22.3	8.3	60.5	16.7	175.5	183.1	30.5	30.7	44.2	196	195.7
LOS by Move:	F	C	A	E	B	F	F	C	C	D	F	F
HCM2kAvgQ:	12	20	3	5	9	65	45	10	8	5	21	21

Note: Queue reported is the number of cars per lane.

City of Murrieta General Plan
Existing General Plan
PM Peak Hour

Level Of Service Computation Report
2000 HCM Operations Method (Future Volume Alternative)

Intersection #53 Hancock Ave & Los Alamos Rd

Cycle (sec): 100 Critical Vol./Cap.(X): 1.622
Loss Time (sec): 0 (Y+R=4.0 sec) Average Delay (sec/veh): 224.1
Optimal Cycle: 180 Level Of Service: F

Street Name:	Hancock Ave						Los Alamos Rd					
Approach:	North Bound			South Bound			East Bound			West Bound		
Movement:	L -	T -	R	L -	T -	R	L -	T -	R	L -	T -	R
Control:	Protected			Protected			Protected			Protected		
Rights:	Include			Include			Include			Include		
Min. Green:	0	0	0	0	0	0	0	0	0	0	0	0
Lanes:	1 0	1 1	0	2 0	0 1	0	1 0	1 1	0	1 0	1 1	0
Volume Module:												
Base Vol:	125	456	917	649	136	24	100	1883	52	602	1217	649
Growth Adj:	1.00	1.00	1.00	1.00	1.00	1.00	1.00	1.00	1.00	1.00	1.00	1.00
Initial Bse:	125	456	917	649	136	24	100	1883	52	602	1217	649
Added Vol:	0	0	0	0	0	0	0	0	0	0	0	0
PasserByVol:	0	0	0	0	0	0	0	0	0	0	0	0
Initial Fut:	125	456	917	649	136	24	100	1883	52	602	1217	649
User Adj:	1.00	1.00	1.00	1.00	1.00	1.00	1.00	1.00	1.00	1.00	1.00	1.00
PHF Adj:	1.00	1.00	1.00	1.00	1.00	1.00	1.00	1.00	1.00	1.00	1.00	1.00
PHF Volume:	125	456	917	649	136	24	100	1883	52	602	1217	649
Reduct Vol:	0	0	0	0	0	0	0	0	0	0	0	0
Reduced Vol:	125	456	917	649	136	24	100	1883	52	602	1217	649
PCE Adj:	1.00	1.00	1.00	1.00	1.00	1.00	1.00	1.00	1.00	1.00	1.00	1.00
MLF Adj:	1.00	1.00	1.00	1.00	1.00	1.00	1.00	1.00	1.00	1.00	1.00	1.00
FinalVolume:	125	456	917	649	136	24	100	1883	52	602	1217	649
Saturation Flow Module:												
Sat/Lane:	1900	1900	1900	1900	1900	1900	1900	1900	1900	1900	1900	1900
Adjustment:	0.95	0.86	0.86	0.92	0.98	0.98	0.95	0.95	0.95	0.95	0.90	0.90
Lanes:	1.00	1.00	1.00	2.00	0.85	0.15	1.00	1.95	0.05	1.00	1.30	0.70
Final Sat.:	1805	1625	1625	3502	1579	279	1805	3499	97	1805	2232	1190
Capacity Analysis Module:												
Vol/Sat:	0.07	0.28	0.56	0.19	0.09	0.09	0.06	0.54	0.54	0.33	0.55	0.55
Crit Moves:			****	****				****		****		
Green/Cycle:	0.21	0.35	0.35	0.11	0.26	0.26	0.05	0.33	0.33	0.21	0.49	0.49
Volume/Cap:	0.34	0.81	1.62	1.62	0.34	0.34	1.12	1.62	1.62	1.62	1.12	1.12
Delay/Veh:	34.4	32.5	317.7	335.2	30.7	30.7	177.9	317	317.0	331.5	87.2	87.2
User DelAdj:	1.00	1.00	1.00	1.00	1.00	1.00	1.00	1.00	1.00	1.00	1.00	1.00
AdjDel/Veh:	34.4	32.5	317.7	335.2	30.7	30.7	177.9	317	317.0	331.5	87.2	87.2
LOS by Move:	C	C	F	F	C	C	F	F	F	F	F	F
HCM2kAvgQ:	3	15	76	28	4	4	7	80	80	48	47	47

Note: Queue reported is the number of cars per lane.

City of Murrieta General Plan
Existing General Plan
PM Peak Hour

Level Of Service Computation Report
2000 HCM Operations Method (Future Volume Alternative)

Intersection #54 I-215 SB Ramps & Los Alamos Rd

Cycle (sec): 100 Critical Vol./Cap.(X): 1.394
Loss Time (sec): 0 (Y+R=4.0 sec) Average Delay (sec/veh): 145.6
Optimal Cycle: 180 Level Of Service: F

Street Name:	I-215 SB Ramps						Los Alamos Rd					
Approach:	North Bound			South Bound			East Bound			West Bound		
Movement:	L -	T -	R	L -	T -	R	L -	T -	R	L -	T -	R
Control:	Protected			Protected			Protected			Protected		
Rights:	Include			Include			Include			Include		
Min. Green:	0	0	0	0	0	0	0	0	0	0	0	0
Lanes:	0 0	0 0	0	1 0	1! 0	1	0 0	2 0	1	2 0	2 0	0
Volume Module:												
Base Vol:	0	0	0	529	0	1508	0	3000	483	152	1171	0
Growth Adj:	1.00	1.00	1.00	1.00	1.00	1.00	1.00	1.00	1.00	1.00	1.00	1.00
Initial Bse:	0	0	0	529	0	1508	0	3000	483	152	1171	0
Added Vol:	0	0	0	0	0	0	0	0	0	0	0	0
PasserByVol:	0	0	0	0	0	0	0	0	0	0	0	0
Initial Fut:	0	0	0	529	0	1508	0	3000	483	152	1171	0
User Adj:	1.00	1.00	1.00	1.00	1.00	1.00	1.00	1.00	1.00	1.00	1.00	1.00
PHF Adj:	1.00	1.00	1.00	1.00	1.00	1.00	1.00	1.00	1.00	1.00	1.00	1.00
PHF Volume:	0	0	0	529	0	1508	0	3000	483	152	1171	0
Reduct Vol:	0	0	0	0	0	0	0	0	0	0	0	0
Reduced Vol:	0	0	0	529	0	1508	0	3000	483	152	1171	0
PCE Adj:	1.00	1.00	1.00	1.00	1.00	1.00	1.00	1.00	1.00	1.00	1.00	1.00
MLF Adj:	1.00	1.00	1.00	1.00	1.00	1.00	1.00	1.00	1.00	1.00	1.00	1.00
FinalVolume:	0	0	0	529	0	1508	0	3000	483	152	1171	0
Saturation Flow Module:												
Sat/Lane:	1900	1900	1900	1900	1900	1900	1900	1900	1900	1900	1900	1900
Adjustment:	1.00	1.00	1.00	0.88	1.00	0.88	1.00	0.95	0.85	0.92	0.95	1.00
Lanes:	0.00	0.00	0.00	1.26	0.00	1.74	0.00	2.00	1.00	2.00	2.00	0.00
Final Sat.:	0	0	0	2100	0	2901	0	3610	1615	3502	3610	0
Capacity Analysis Module:												
Vol/Sat:	0.00	0.00	0.00	0.25	0.00	0.52	0.00	0.83	0.30	0.04	0.32	0.00
Crit Moves:						****		****		****		
Green/Cycle:	0.00	0.00	0.00	0.37	0.00	0.37	0.00	0.60	0.60	0.03	0.63	0.00
Volume/Cap:	0.00	0.00	0.00	0.68	0.00	1.39	0.00	1.39	0.50	1.39	0.52	0.00
Delay/Veh:	0.0	0.0	0.0	26.9	0.0	213.0	0.0	200	12.1	272.1	10.5	0.0
User DelAdj:	1.00	1.00	1.00	1.00	1.00	1.00	1.00	1.00	1.00	1.00	1.00	1.00
AdjDel/Veh:	0.0	0.0	0.0	26.9	0.0	213.0	0.0	200	12.1	272.1	10.5	0.0
LOS by Move:	A	A	A	C	A	F	A	F	B	F	B	A
HCM2kAvgQ:	0	0	0	12	0	58	0	103	9	7	11	0

Note: Queue reported is the number of cars per lane.

City of Murrieta General Plan
Existing General Plan
PM Peak Hour

Level Of Service Computation Report
2000 HCM Operations Method (Future Volume Alternative)

Intersection #55 I-215 NB Ramps & Los Alamos Rd

Cycle (sec): 100 Critical Vol./Cap.(X): 0.897
Loss Time (sec): 0 (Y+R=4.0 sec) Average Delay (sec/veh): 23.1
Optimal Cycle: 180 Level Of Service: C

Street Name:	I-215 NB Ramps						Los Alamos Rd					
Approach:	North Bound			South Bound			East Bound			West Bound		
Movement:	L -	T -	R	L -	T -	R	L -	T -	R	L -	T -	R
Control:	Protected			Protected			Protected			Protected		
Rights:	Include			Include			Include			Include		
Min. Green:	0	0	0	0	0	0	0	0	0	0	0	0
Lanes:	0 1	0 1	0	0 0	0 0	0	2 0	3 0	0	0 0	2 0	1
Volume Module:												
Base Vol:	211	7	114	0	0	0	1587	1856	0	0	1110	242
Growth Adj:	1.00	1.00	1.00	1.00	1.00	1.00	1.00	1.00	1.00	1.00	1.00	1.00
Initial Bse:	211	7	114	0	0	0	1587	1856	0	0	1110	242
Added Vol:	0	0	0	0	0	0	0	0	0	0	0	0
PasserByVol:	0	0	0	0	0	0	0	0	0	0	0	0
Initial Fut:	211	7	114	0	0	0	1587	1856	0	0	1110	242
User Adj:	1.00	1.00	1.00	1.00	1.00	1.00	1.00	1.00	1.00	1.00	1.00	1.00
PHF Adj:	1.00	1.00	1.00	1.00	1.00	1.00	1.00	1.00	1.00	1.00	1.00	1.00
PHF Volume:	211	7	114	0	0	0	1587	1856	0	0	1110	242
Reduct Vol:	0	0	0	0	0	0	0	0	0	0	0	0
Reduced Vol:	211	7	114	0	0	0	1587	1856	0	0	1110	242
PCE Adj:	1.00	1.00	1.00	1.00	1.00	1.00	1.00	1.00	1.00	1.00	1.00	1.00
MLF Adj:	1.00	1.00	1.00	1.00	1.00	1.00	1.00	1.00	1.00	1.00	1.00	1.00
FinalVolume:	211	7	114	0	0	0	1587	1856	0	0	1110	242
Saturation Flow Module:												
Sat/Lane:	1900	1900	1900	1900	1900	1900	1900	1900	1900	1900	1900	1900
Adjustment:	0.82	0.82	0.82	1.00	1.00	1.00	0.92	0.91	1.00	1.00	0.95	0.85
Lanes:	1.00	0.06	0.94	0.00	0.00	0.00	2.00	3.00	0.00	0.00	2.00	1.00
Final Sat.:	1550	90	1461	0	0	0	3502	5187	0	0	3610	1615
Capacity Analysis Module:												
Vol/Sat:	0.14	0.08	0.08	0.00	0.00	0.00	0.45	0.36	0.00	0.00	0.31	0.15
Crit Moves:	****						****				****	
Green/Cycle:	0.15	0.15	0.15	0.00	0.00	0.00	0.51	0.85	0.00	0.00	0.34	0.34
Volume/Cap:	0.90	0.51	0.51	0.00	0.00	0.00	0.90	0.42	0.00	0.00	0.90	0.44
Delay/Veh:	65.1	39.7	39.7	0.0	0.0	0.0	28.8	1.9	0.0	0.0	40.0	26.0
User DelAdj:	1.00	1.00	1.00	1.00	1.00	1.00	1.00	1.00	1.00	1.00	1.00	1.00
AdjDel/Veh:	65.1	39.7	39.7	0.0	0.0	0.0	28.8	1.9	0.0	0.0	40.0	26.0
LOS by Move:	E	D	D	A	A	A	C	A	A	A	D	C
HCM2kAvgQ:	10	4	4	0	0	0	26	5	0	0	21	6

Note: Queue reported is the number of cars per lane.

City of Murrieta General Plan
Existing General Plan
PM Peak Hour

Level Of Service Computation Report
2000 HCM Operations Method (Future Volume Alternative)

Intersection #56 Whitewood Rd & Los Alamos Rd

Cycle (sec): 100 Critical Vol./Cap.(X): 0.789
Loss Time (sec): 0 (Y+R=4.0 sec) Average Delay (sec/veh): 29.5
Optimal Cycle: 108 Level Of Service: C

Street Name:	Whitewood Rd						Los Alamos Rd					
Approach:	North Bound			South Bound			East Bound			West Bound		
Movement:	L	T	R	L	T	R	L	T	R	L	T	R
Control:	Protected			Protected			Protected			Protected		
Rights:	Include			Include			Include			Include		
Min. Green:	0	0	0	0	0	0	0	0	0	0	0	0
Lanes:	1	0 1	1 0	1	0 2	0 1	1	0 2	0 1	1	0 1	1 0
Volume Module:												
Base Vol:	131	558	41	33	482	433	690	356	256	60	191	41
Growth Adj:	1.00	1.00	1.00	1.00	1.00	1.00	1.00	1.00	1.00	1.00	1.00	1.00
Initial Bse:	131	558	41	33	482	433	690	356	256	60	191	41
Added Vol:	0	0	0	0	0	0	0	0	0	0	0	0
PasserByVol:	0	0	0	0	0	0	0	0	0	0	0	0
Initial Fut:	131	558	41	33	482	433	690	356	256	60	191	41
User Adj:	1.00	1.00	1.00	1.00	1.00	1.00	1.00	1.00	1.00	1.00	1.00	1.00
PHF Adj:	1.00	1.00	1.00	1.00	1.00	1.00	1.00	1.00	1.00	1.00	1.00	1.00
PHF Volume:	131	558	41	33	482	433	690	356	256	60	191	41
Reduct Vol:	0	0	0	0	0	0	0	0	0	0	0	0
Reduced Vol:	131	558	41	33	482	433	690	356	256	60	191	41
PCE Adj:	1.00	1.00	1.00	1.00	1.00	1.00	1.00	1.00	1.00	1.00	1.00	1.00
MLF Adj:	1.00	1.00	1.00	1.00	1.00	1.00	1.00	1.00	1.00	1.00	1.00	1.00
FinalVolume:	131	558	41	33	482	433	690	356	256	60	191	41
Saturation Flow Module:												
Sat/Lane:	1900	1900	1900	1900	1900	1900	1900	1900	1900	1900	1900	1900
Adjustment:	0.95	0.94	0.94	0.95	0.95	0.85	0.95	0.95	0.85	0.95	0.92	0.92
Lanes:	1.00	1.86	0.14	1.00	2.00	1.00	1.00	2.00	1.00	1.00	1.65	0.35
Final Sat.:	1805	3329	245	1805	3610	1615	1805	3610	1615	1805	2892	621
Capacity Analysis Module:												
Vol/Sat:	0.07	0.17	0.17	0.02	0.13	0.27	0.38	0.10	0.16	0.03	0.07	0.07
Crit Moves:	****					****	****				****	
Green/Cycle:	0.09	0.39	0.39	0.04	0.34	0.34	0.48	0.47	0.47	0.10	0.08	0.08
Volume/Cap:	0.79	0.43	0.43	0.43	0.39	0.79	0.79	0.21	0.34	0.34	0.79	0.79
Delay/Veh:	66.3	22.6	22.6	50.5	25.4	37.3	26.4	15.7	17.0	43.2	58.3	58.3
User DelAdj:	1.00	1.00	1.00	1.00	1.00	1.00	1.00	1.00	1.00	1.00	1.00	1.00
AdjDel/Veh:	66.3	22.6	22.6	50.5	25.4	37.3	26.4	15.7	17.0	43.2	58.3	58.3
LOS by Move:	E	C	C	D	C	D	C	B	B	D	E	E
HCM2kAvgQ:	6	7	7	2	6	14	19	3	5	2	6	6

Note: Queue reported is the number of cars per lane.

City of Murrieta General Plan
Existing General Plan
PM Peak Hour

Level Of Service Computation Report
2000 HCM Operations Method (Future Volume Alternative)

Intersection #57 Whitewood Rd & Murrieta Hot Springs Rd

Cycle (sec): 100 Critical Vol./Cap.(X): 1.094
Loss Time (sec): 0 (Y+R=4.0 sec) Average Delay (sec/veh): 67.7
Optimal Cycle: 180 Level Of Service: E

Street Name:	Whitewood Rd						Murrieta Hot Springs Rd					
Approach:	North Bound			South Bound			East Bound			West Bound		
Movement:	L	T	R	L	T	R	L	T	R	L	T	R
Control:	Protected			Protected			Protected			Protected		
Rights:	Include			Include			Include			Include		
Min. Green:	0	0	0	0	0	0	0	0	0	0	0	0
Lanes:	1	0 1	1 0	1	0 1	1 0	1	0 2	1 0	1	0 2	1 0
Volume Module:												
Base Vol:	438	307	484	299	219	212	173	1608	168	367	2267	448
Growth Adj:	1.00	1.00	1.00	1.00	1.00	1.00	1.00	1.00	1.00	1.00	1.00	1.00
Initial Bse:	438	307	484	299	219	212	173	1608	168	367	2267	448
Added Vol:	0	0	0	0	0	0	0	0	0	0	0	0
PasserByVol:	0	0	0	0	0	0	0	0	0	0	0	0
Initial Fut:	438	307	484	299	219	212	173	1608	168	367	2267	448
User Adj:	1.00	1.00	1.00	1.00	1.00	1.00	1.00	1.00	1.00	1.00	1.00	1.00
PHF Adj:	1.00	1.00	1.00	1.00	1.00	1.00	1.00	1.00	1.00	1.00	1.00	1.00
PHF Volume:	438	307	484	299	219	212	173	1608	168	367	2267	448
Reduct Vol:	0	0	0	0	0	0	0	0	0	0	0	0
Reduced Vol:	438	307	484	299	219	212	173	1608	168	367	2267	448
PCE Adj:	1.00	1.00	1.00	1.00	1.00	1.00	1.00	1.00	1.00	1.00	1.00	1.00
MLF Adj:	1.00	1.00	1.00	1.00	1.00	1.00	1.00	1.00	1.00	1.00	1.00	1.00
FinalVolume:	438	307	484	299	219	212	173	1608	168	367	2267	448
Saturation Flow Module:												
Sat/Lane:	1900	1900	1900	1900	1900	1900	1900	1900	1900	1900	1900	1900
Adjustment:	0.95	0.86	0.86	0.95	0.88	0.88	0.95	0.90	0.90	0.95	0.89	0.89
Lanes:	1.00	1.00	1.00	1.00	1.02	0.98	1.00	2.72	0.28	1.00	2.50	0.50
Final Sat.:	1805	1639	1639	1805	1699	1644	1805	4631	484	1805	4223	835
Capacity Analysis Module:												
Vol/Sat:	0.24	0.19	0.30	0.17	0.13	0.13	0.10	0.35	0.35	0.20	0.54	0.54
Crit Moves:			****	****			****				****	
Green/Cycle:	0.28	0.27	0.27	0.15	0.15	0.15	0.09	0.36	0.36	0.21	0.49	0.49
Volume/Cap:	0.88	0.69	1.09	1.09	0.88	0.88	1.09	0.95	0.95	0.95	1.09	1.09
Delay/Veh:	51.3	34.7	98.4	124.2	58.7	58.7	144.4	42.4	42.4	72.2	74.8	74.8
User DelAdj:	1.00	1.00	1.00	1.00	1.00	1.00	1.00	1.00	1.00	1.00	1.00	1.00
AdjDel/Veh:	51.3	34.7	98.4	124.2	58.7	58.7	144.4	42.4	42.4	72.2	74.8	74.8
LOS by Move:	D	C	F	F	E	E	F	D	D	E	E	E
HCM2kAvgQ:	16	10	25	16	10	10	10	25	25	16	45	45

Note: Queue reported is the number of cars per lane.

City of Murrieta General Plan
Existing General Plan
PM Peak Hour

Level Of Service Computation Report
2000 HCM Operations Method (Future Volume Alternative)

Intersection #59 Nutmeg St & Clinton Keith Rd

Cycle (sec): 100 Critical Vol./Cap.(X): 1.029
Loss Time (sec): 0 (Y+R=4.0 sec) Average Delay (sec/veh): 51.6
Optimal Cycle: 180 Level Of Service: D

Street Name:	Nutmeg St						Clinton Keith Rd					
Approach:	North Bound			South Bound			East Bound			West Bound		
Movement:	L -	T -	R	L -	T -	R	L -	T -	R	L -	T -	R
Control:	Protected			Protected			Protected			Protected		
Rights:	Include			Include			Include			Include		
Min. Green:	0	0	0	0	0	0	0	0	0	0	0	0
Lanes:	1 0	1	1 0	1 0	1	1 0	1 0	2	1 0	1 0	2	1 0
Volume Module:												
Base Vol:	57	78	423	277	29	52	96	1702	62	479	1742	341
Growth Adj:	1.00	1.00	1.00	1.00	1.00	1.00	1.00	1.00	1.00	1.00	1.00	1.00
Initial Bse:	57	78	423	277	29	52	96	1702	62	479	1742	341
Added Vol:	0	0	0	0	0	0	0	0	0	0	0	0
PasserByVol:	0	0	0	0	0	0	0	0	0	0	0	0
Initial Fut:	57	78	423	277	29	52	96	1702	62	479	1742	341
User Adj:	1.00	1.00	1.00	1.00	1.00	1.00	1.00	1.00	1.00	1.00	1.00	1.00
PHF Adj:	1.00	1.00	1.00	1.00	1.00	1.00	1.00	1.00	1.00	1.00	1.00	1.00
PHF Volume:	57	78	423	277	29	52	96	1702	62	479	1742	341
Reduct Vol:	0	0	0	0	0	0	0	0	0	0	0	0
Reduced Vol:	57	78	423	277	29	52	96	1702	62	479	1742	341
PCE Adj:	1.00	1.00	1.00	1.00	1.00	1.00	1.00	1.00	1.00	1.00	1.00	1.00
MLF Adj:	1.00	1.00	1.00	1.00	1.00	1.00	1.00	1.00	1.00	1.00	1.00	1.00
FinalVolume:	57	78	423	277	29	52	96	1702	62	479	1742	341
Saturation Flow Module:												
Sat/Lane:	1900	1900	1900	1900	1900	1900	1900	1900	1900	1900	1900	1900
Adjustment:	0.95	0.83	0.83	0.95	0.86	0.86	0.95	0.91	0.91	0.95	0.89	0.89
Lanes:	1.00	1.00	1.00	1.00	1.00	1.00	1.00	2.89	0.11	1.00	2.51	0.49
Final Sat.:	1805	1576	1576	1805	1632	1632	1805	4980	181	1805	4229	828
Capacity Analysis Module:												
Vol/Sat:	0.03	0.05	0.27	0.15	0.02	0.03	0.05	0.34	0.34	0.27	0.41	0.41
Crit Moves:			****	****				****		****		
Green/Cycle:	0.20	0.26	0.26	0.15	0.21	0.21	0.07	0.33	0.33	0.26	0.52	0.52
Volume/Cap:	0.15	0.19	1.03	1.03	0.09	0.15	0.79	1.03	1.03	1.03	0.79	0.79
Delay/Veh:	32.9	28.8	85.4	105.1	32.1	32.7	74.1	62.9	62.9	86.5	21.0	21.0
User DelAdj:	1.00	1.00	1.00	1.00	1.00	1.00	1.00	1.00	1.00	1.00	1.00	1.00
AdjDel/Veh:	32.9	28.8	85.4	105.1	32.1	32.7	74.1	62.9	62.9	86.5	21.0	21.0
LOS by Move:	C	C	F	F	C	C	E	E	E	F	C	C
HCM2kAvgQ:	1	2	21	14	1	1	5	28	28	22	21	21

Note: Queue reported is the number of cars per lane.

City of Murrieta General Plan
Existing General Plan
PM Peak Hour

Level Of Service Computation Report
2000 HCM Operations Method (Future Volume Alternative)

Intersection #60 Murrieta Oaks Ave-Mitchell Rd & Clinton Keith Rd

Cycle (sec): 100 Critical Vol./Cap.(X): 0.930
Loss Time (sec): 0 (Y+R=4.0 sec) Average Delay (sec/veh): 26.2
Optimal Cycle: 180 Level Of Service: C

Street Name:	Murrieta Oaks Ave-Mitchell Rd						Clinton Keith Rd					
Approach:	North Bound			South Bound			East Bound			West Bound		
Movement:	L -	T -	R	L -	T -	R	L -	T -	R	L -	T -	R
Control:	Protected			Protected			Protected			Protected		
Rights:	Include			Include			Include			Include		
Min. Green:	0	0	0	0	0	0	0	0	0	0	0	0
Lanes:	1 0	0	1 0	1 0	1	0 1	1 0	2	1 0	1 0	2	1 0
Volume Module:												
Base Vol:	21	114	25	57	147	488	80	2903	25	40	2677	250
Growth Adj:	1.00	1.00	1.00	1.00	1.00	1.00	1.00	1.00	1.00	1.00	1.00	1.00
Initial Bse:	21	114	25	57	147	488	80	2903	25	40	2677	250
Added Vol:	0	0	0	0	0	0	0	0	0	0	0	0
PasserByVol:	0	0	0	0	0	0	0	0	0	0	0	0
Initial Fut:	21	114	25	57	147	488	80	2903	25	40	2677	250
User Adj:	1.00	1.00	1.00	1.00	1.00	1.00	1.00	1.00	1.00	1.00	1.00	1.00
PHF Adj:	1.00	1.00	1.00	1.00	1.00	1.00	1.00	1.00	1.00	1.00	1.00	1.00
PHF Volume:	21	114	25	57	147	488	80	2903	25	40	2677	250
Reduct Vol:	0	0	0	0	0	0	0	0	0	0	0	0
Reduced Vol:	21	114	25	57	147	488	80	2903	25	40	2677	250
PCE Adj:	1.00	1.00	1.00	1.00	1.00	1.00	1.00	1.00	1.00	1.00	1.00	1.00
MLF Adj:	1.00	1.00	1.00	1.00	1.00	1.00	1.00	1.00	1.00	1.00	1.00	1.00
FinalVolume:	21	114	25	57	147	488	80	2903	25	40	2677	250
Saturation Flow Module:												
Sat/Lane:	1900	1900	1900	1900	1900	1900	1900	1900	1900	1900	1900	1900
Adjustment:	0.95	0.97	0.97	0.95	1.00	0.85	0.95	0.91	0.91	0.95	0.90	0.90
Lanes:	1.00	0.82	0.18	1.00	1.00	1.00	1.00	2.97	0.03	1.00	2.74	0.26
Final Sat.:	1805	1516	333	1805	1900	1615	1805	5138	44	1805	4682	437
Capacity Analysis Module:												
Vol/Sat:	0.01	0.08	0.08	0.03	0.08	0.30	0.04	0.57	0.57	0.02	0.57	0.57
Crit Moves:	****					****	****				****	
Green/Cycle:	0.01	0.24	0.24	0.10	0.32	0.32	0.05	0.64	0.64	0.03	0.61	0.61
Volume/Cap:	0.93	0.32	0.32	0.32	0.24	0.93	0.93	0.89	0.89	0.89	0.93	0.93
Delay/Veh:	206.3	31.8	31.8	42.9	24.9	55.9	121.2	18.4	18.4	139.9	23.0	23.0
User DelAdj:	1.00	1.00	1.00	1.00	1.00	1.00	1.00	1.00	1.00	1.00	1.00	1.00
AdjDel/Veh:	206.3	31.8	31.8	42.9	24.9	55.9	121.2	18.4	18.4	139.9	23.0	23.0
LOS by Move:	F	C	C	D	C	E	F	B	B	F	C	C
HCM2kAvgQ:	2	4	4	2	3	19	5	31	31	3	34	34

Note: Queue reported is the number of cars per lane.

City of Murrieta General Plan
Existing General Plan
PM Peak Hour

Level Of Service Computation Report
2000 HCM Operations Method (Future Volume Alternative)

Intersection #61 I-215 SB Ramps & Scott Rd

Cycle (sec): 100 Critical Vol./Cap.(X): 0.385
Loss Time (sec): 0 (Y+R=4.0 sec) Average Delay (sec/veh): 8.4
Optimal Cycle: 37 Level Of Service: A

Street Name:	I-215 SB Ramps						Scott Rd					
Approach:	North Bound			South Bound			East Bound			West Bound		
Movement:	L	T	R	L	T	R	L	T	R	L	T	R
Control:	Protected			Protected			Protected			Protected		
Rights:	Include			Include			Ignore			Ignore		
Min. Green:	0	0	0	0	0	0	0	0	0	0	0	0
Lanes:	0 0	0 0	0	2 0	0 0	2	0 0	4 0	1	0 0	3 0	2
Volume Module:												
Base Vol:	0	0	0	153	0	273	0	763	404	0	1500	409
Growth Adj:	1.00	1.00	1.00	1.00	1.00	1.00	1.00	1.00	1.00	1.00	1.00	1.00
Initial Bse:	0	0	0	153	0	273	0	763	404	0	1500	409
Added Vol:	0	0	0	0	0	0	0	0	0	0	0	0
PasserByVol:	0	0	0	0	0	0	0	0	0	0	0	0
Initial Fut:	0	0	0	153	0	273	0	763	404	0	1500	409
User Adj:	1.00	1.00	1.00	1.00	1.00	1.00	1.00	1.00	0.00	1.00	1.00	0.00
PHF Adj:	1.00	1.00	1.00	1.00	1.00	1.00	1.00	1.00	0.00	1.00	1.00	0.00
PHF Volume:	0	0	0	153	0	273	0	763	0	0	1500	0
Reduct Vol:	0	0	0	0	0	0	0	0	0	0	0	0
Reduced Vol:	0	0	0	153	0	273	0	763	0	0	1500	0
PCE Adj:	1.00	1.00	1.00	1.00	1.00	1.00	1.00	1.00	0.00	1.00	1.00	0.00
MLF Adj:	1.00	1.00	1.00	1.00	1.00	1.00	1.00	1.00	0.00	1.00	1.00	0.00
FinalVolume:	0	0	0	153	0	273	0	763	0	0	1500	0
Saturation Flow Module:												
Sat/Lane:	1900	1900	1900	1900	1900	1900	1900	1900	1900	1900	1900	1900
Adjustment:	1.00	1.00	1.00	0.92	1.00	0.75	1.00	0.91	1.00	1.00	0.91	0.88
Lanes:	0.00	0.00	0.00	2.00	0.00	2.00	0.00	4.00	1.00	0.00	3.00	2.00
Final Sat.:	0	0	0	3502	0	2842	0	6916	1900	0	5187	3344
Capacity Analysis Module:												
Vol/Sat:	0.00	0.00	0.00	0.04	0.00	0.10	0.00	0.11	0.00	0.00	0.29	0.00
Crit Moves:						****	****				****	
Green/Cycle:	0.00	0.00	0.00	0.25	0.00	0.25	0.00	0.75	0.00	0.00	0.75	0.00
Volume/Cap:	0.00	0.00	0.00	0.18	0.00	0.39	0.00	0.15	0.00	0.00	0.39	0.00
Delay/Veh:	0.0	0.0	0.0	29.6	0.0	31.5	0.0	3.5	0.0	0.0	4.4	0.0
User DelAdj:	1.00	1.00	1.00	1.00	1.00	1.00	1.00	1.00	1.00	1.00	1.00	1.00
AdjDel/Veh:	0.0	0.0	0.0	29.6	0.0	31.5	0.0	3.5	0.0	0.0	4.4	0.0
LOS by Move:	A	A	A	C	A	C	A	A	A	A	A	A
HCM2kAvgQ:	0	0	0	2	0	4	0	2	0	0	6	0

Note: Queue reported is the number of cars per lane.

City of Murrieta General Plan
Existing General Plan
PM Peak Hour

Level Of Service Computation Report
2000 HCM Operations Method (Future Volume Alternative)

Intersection #62 I-215 NB Ramps & Scott Rd

Cycle (sec): 100 Critical Vol./Cap.(X): 0.509
Loss Time (sec): 0 (Y+R=4.0 sec) Average Delay (sec/veh): 16.2
Optimal Cycle: 46 Level Of Service: B

Street Name:	I-215 NB Ramps						Scott Rd					
Approach:	North Bound			South Bound			East Bound			West Bound		
Movement:	L	T	R	L	T	R	L	T	R	L	T	R
Control:	Protected			Protected			Protected			Protected		
Rights:	Include			Include			Include			Ovl		
Min. Green:	0	0	0	0	0	0	0	0	0	0	0	0
Lanes:	0 0	0 1	2	0 0	0 0	2	2 0	4 0	0	0 0	3 0	2
Volume Module:												
Base Vol:	0	9	742	0	0	496	128	920	0	0	1538	345
Growth Adj:	1.00	1.00	1.00	1.00	1.00	1.00	1.00	1.00	1.00	1.00	1.00	1.00
Initial Bse:	0	9	742	0	0	496	128	920	0	0	1538	345
Added Vol:	0	0	0	0	0	0	0	0	0	0	0	0
PasserByVol:	0	0	0	0	0	0	0	0	0	0	0	0
Initial Fut:	0	9	742	0	0	496	128	920	0	0	1538	345
User Adj:	1.00	1.00	1.00	1.00	1.00	1.00	1.00	1.00	1.00	1.00	1.00	1.00
PHF Adj:	1.00	1.00	1.00	1.00	1.00	1.00	1.00	1.00	1.00	1.00	1.00	1.00
PHF Volume:	0	9	742	0	0	496	128	920	0	0	1538	345
Reduct Vol:	0	0	0	0	0	0	0	0	0	0	0	0
Reduced Vol:	0	9	742	0	0	496	128	920	0	0	1538	345
PCE Adj:	1.00	1.00	1.00	1.00	1.00	1.00	1.00	1.00	1.00	1.00	1.00	1.00
MLF Adj:	1.00	1.00	1.00	1.00	1.00	1.00	1.00	1.00	1.00	1.00	1.00	1.00
FinalVolume:	0	9	742	0	0	496	128	920	0	0	1538	345
Saturation Flow Module:												
Sat/Lane:	1900	1900	1900	1900	1900	1900	1900	1900	1900	1900	1900	1900
Adjustment:	1.00	0.85	0.75	1.00	1.00	0.75	0.92	0.91	1.00	1.00	0.91	0.75
Lanes:	0.00	0.03	2.97	0.00	0.00	2.00	2.00	4.00	0.00	0.00	3.00	2.00
Final Sat.:	0	51	4228	0	0	2842	3502	6916	0	0	5187	2842
Capacity Analysis Module:												
Vol/Sat:	0.00	0.18	0.18	0.00	0.00	0.17	0.04	0.13	0.00	0.00	0.30	0.12
Crit Moves:		****		****			****				****	
Green/Cycle:	0.00	0.35	0.35	0.00	0.00	0.35	0.07	0.65	0.00	0.00	0.58	0.58
Volume/Cap:	0.00	0.51	0.51	0.00	0.00	0.51	0.51	0.20	0.00	0.00	0.51	0.21
Delay/Veh:	0.0	26.3	26.3	0.0	0.0	26.4	46.4	6.9	0.0	0.0	12.5	10.0
User DelAdj:	1.00	1.00	1.00	1.00	1.00	1.00	1.00	1.00	1.00	1.00	1.00	1.00
AdjDel/Veh:	0.0	26.3	26.3	0.0	0.0	26.4	46.4	6.9	0.0	0.0	12.5	10.0
LOS by Move:	A	C	C	A	A	C	D	A	A	A	B	A
HCM2kAvgQ:	0	7	7	0	0	7	3	3	0	0	10	3

Note: Queue reported is the number of cars per lane.

City of Murrieta General Plan
Existing General Plan
PM Peak Hour

Level Of Service Computation Report
2000 HCM Operations Method (Future Volume Alternative)

Intersection #102 Leon Road & Scott Road

Cycle (sec): 100 Critical Vol./Cap.(X): 0.958
Loss Time (sec): 0 (Y+R=4.0 sec) Average Delay (sec/veh): 45.9
Optimal Cycle: 180 Level Of Service: D

Street Name:	Leon Road						Scott Road					
Approach:	North Bound			South Bound			East Bound			West Bound		
Movement:	L - T - R			L - T - R			L - T - R			L - T - R		
Control:	Protected			Protected			Protected			Protected		
Rights:	Include			Include			Include			Include		
Min. Green:	0	0	0	0	0	0	0	0	0	0	0	0
Lanes:	1	0 1	1 0	1	0 1	1 0	1	0 2	1 0	1	0 2	1 0
Volume Module:												
Base Vol:	515	367	15	62	192	398	575	495	441	4	385	155
Growth Adj:	1.00	1.00	1.00	1.00	1.00	1.00	1.00	1.00	1.00	1.00	1.00	1.00
Initial Bse:	515	367	15	62	192	398	575	495	441	4	385	155
Added Vol:	0	0	0	0	0	0	0	0	0	0	0	0
PasserByVol:	0	0	0	0	0	0	0	0	0	0	0	0
Initial Fut:	515	367	15	62	192	398	575	495	441	4	385	155
User Adj:	1.00	1.00	1.00	1.00	1.00	1.00	1.00	1.00	1.00	1.00	1.00	1.00
PHF Adj:	1.00	1.00	1.00	1.00	1.00	1.00	1.00	1.00	1.00	1.00	1.00	1.00
PHF Volume:	515	367	15	62	192	398	575	495	441	4	385	155
Reduct Vol:	0	0	0	0	0	0	0	0	0	0	0	0
Reduced Vol:	515	367	15	62	192	398	575	495	441	4	385	155
PCE Adj:	1.00	1.00	1.00	1.00	1.00	1.00	1.00	1.00	1.00	1.00	1.00	1.00
MLF Adj:	1.00	1.00	1.00	1.00	1.00	1.00	1.00	1.00	1.00	1.00	1.00	1.00
FinalVolume:	515	367	15	62	192	398	575	495	441	4	385	155
Saturation Flow Module:												
Sat/Lane:	1900	1900	1900	1900	1900	1900	1900	1900	1900	1900	1900	1900
Adjustment:	0.95	0.94	0.94	0.95	0.85	0.85	0.95	0.85	0.85	0.95	0.87	0.87
Lanes:	1.00	1.92	0.08	1.00	1.00	1.00	1.00	2.00	1.00	1.00	2.14	0.86
Final Sat.:	1805	3447	141	1805	1623	1623	1805	3212	1606	1805	3539	1425
Capacity Analysis Module:												
Vol/Sat:	0.29	0.11	0.11	0.03	0.12	0.25	0.32	0.15	0.27	0.00	0.11	0.11
Crit Moves:	****					****	****				****	
Green/Cycle:	0.30	0.42	0.42	0.14	0.26	0.26	0.33	0.44	0.44	0.00	0.11	0.11
Volume/Cap:	0.96	0.25	0.25	0.25	0.46	0.96	0.96	0.35	0.62	0.62	0.96	0.96
Delay/Veh:	62.9	19.0	19.0	39.3	31.7	62.8	59.2	18.4	22.2	163.0	71.7	71.7
User DelAdj:	1.00	1.00	1.00	1.00	1.00	1.00	1.00	1.00	1.00	1.00	1.00	1.00
AdjDel/Veh:	62.9	19.0	19.0	39.3	31.7	62.8	59.2	18.4	22.2	163.0	71.7	71.7
LOS by Move:	E	B	B	D	C	E	E	B	C	F	E	E
HCM2kAvgQ:	21	4	4	2	6	18	23	6	12	1	10	10

Note: Queue reported is the number of cars per lane.

City of Murrieta General Plan
Existing General Plan
PM Peak Hour

Level Of Service Computation Report
2000 HCM Operations Method (Future Volume Alternative)

Intersection #104 Antelope Road & Keller Road

Cycle (sec): 100 Critical Vol./Cap.(X): 0.783
Loss Time (sec): 0 (Y+R=4.0 sec) Average Delay (sec/veh): 35.1
Optimal Cycle: 105 Level Of Service: D

Street Name:	Antelope Road						Keller Road					
Approach:	North Bound			South Bound			East Bound			West Bound		
Movement:	L - T - R			L - T - R			L - T - R			L - T - R		
Control:	Protected			Protected			Protected			Protected		
Rights:	Include			Include			Include			Include		
Min. Green:	0	0	0	0	0	0	0	0	0	0	0	0
Lanes:	2	0 2	0 1	1	0 2	0 1	2	0 3	0 1	1	0 3	0 1
Volume Module:												
Base Vol:	623	379	728	79	78	484	722	807	227	186	426	109
Growth Adj:	1.00	1.00	1.00	1.00	1.00	1.00	1.00	1.00	1.00	1.00	1.00	1.00
Initial Bse:	623	379	728	79	78	484	722	807	227	186	426	109
Added Vol:	0	0	0	0	0	0	0	0	0	0	0	0
PasserByVol:	0	0	0	0	0	0	0	0	0	0	0	0
Initial Fut:	623	379	728	79	78	484	722	807	227	186	426	109
User Adj:	1.00	1.00	1.00	1.00	1.00	1.00	1.00	1.00	1.00	1.00	1.00	1.00
PHF Adj:	1.00	1.00	1.00	1.00	1.00	1.00	1.00	1.00	1.00	1.00	1.00	1.00
PHF Volume:	623	379	728	79	78	484	722	807	227	186	426	109
Reduct Vol:	0	0	0	0	0	0	0	0	0	0	0	0
Reduced Vol:	623	379	728	79	78	484	722	807	227	186	426	109
PCE Adj:	1.00	1.00	1.00	1.00	1.00	1.00	1.00	1.00	1.00	1.00	1.00	1.00
MLF Adj:	1.00	1.00	1.00	1.00	1.00	1.00	1.00	1.00	1.00	1.00	1.00	1.00
FinalVolume:	623	379	728	79	78	484	722	807	227	186	426	109
Saturation Flow Module:												
Sat/Lane:	1900	1900	1900	1900	1900	1900	1900	1900	1900	1900	1900	1900
Adjustment:	0.92	0.95	0.85	0.95	0.95	0.85	0.92	0.91	0.85	0.95	0.91	0.85
Lanes:	2.00	2.00	1.00	1.00	2.00	1.00	2.00	3.00	1.00	1.00	3.00	1.00
Final Sat.:	3502	3610	1615	1805	3610	1615	3502	5187	1615	1805	5187	1615
Capacity Analysis Module:												
Vol/Sat:	0.18	0.10	0.45	0.04	0.02	0.30	0.21	0.16	0.14	0.10	0.08	0.07
Crit Moves:			****	****			****				****	
Green/Cycle:	0.24	0.58	0.58	0.06	0.40	0.40	0.26	0.22	0.22	0.15	0.10	0.10
Volume/Cap:	0.76	0.18	0.78	0.78	0.05	0.76	0.78	0.70	0.63	0.70	0.78	0.64
Delay/Veh:	39.6	10.1	20.8	78.4	18.6	31.2	38.6	37.9	39.0	48.8	50.9	51.2
User DelAdj:	1.00	1.00	1.00	1.00	1.00	1.00	1.00	1.00	1.00	1.00	1.00	1.00
AdjDel/Veh:	39.6	10.1	20.8	78.4	18.6	31.2	38.6	37.9	39.0	48.8	50.9	51.2
LOS by Move:	D	B	C	E	B	C	D	D	D	D	D	D
HCM2kAvgQ:	11	3	19	4	1	14	13	10	7	7	7	4

Note: Queue reported is the number of cars per lane.

City of Murrieta General Plan
Existing General Plan
PM Peak Hour

Level Of Service Computation Report
2000 HCM Operations Method (Future Volume Alternative)

Intersection #105 Menifee Road - Meadowlark Road & Keller Road

Cycle (sec): 100 | Critical Vol./Cap.(X): 0.825
Loss Time (sec): 0 (Y+R=4.0 sec) | Average Delay (sec/veh): 33.1
Optimal Cycle: 130 | Level Of Service: C

Street Name:	Menifee Road - Meadowlark Road						Keller Road					
Approach:	North Bound			South Bound			East Bound			West Bound		
Movement:	L - T - R			L - T - R			L - T - R			L - T - R		
Control:	Protected			Protected			Protected			Protected		
Rights:	Include			Include			Include			Include		
Min. Green:	0	0	0	0	0	0	0	0	0	0	0	0
Lanes:	1 0	1	1 0	1 0	1	1 0	2 0	1	1 0	1 0	1	1 0
Volume Module:												
Base Vol:	63	775	543	126	819	293	783	295	361	202	300	184
Growth Adj:	1.00	1.00	1.00	1.00	1.00	1.00	1.00	1.00	1.00	1.00	1.00	1.00
Initial Bse:	63	775	543	126	819	293	783	295	361	202	300	184
Added Vol:	0	0	0	0	0	0	0	0	0	0	0	0
PasserByVol:	0	0	0	0	0	0	0	0	0	0	0	0
Initial Fut:	63	775	543	126	819	293	783	295	361	202	300	184
User Adj:	1.00	1.00	1.00	1.00	1.00	1.00	1.00	1.00	1.00	1.00	1.00	1.00
PHF Adj:	1.00	1.00	1.00	1.00	1.00	1.00	1.00	1.00	1.00	1.00	1.00	1.00
PHF Volume:	63	775	543	126	819	293	783	295	361	202	300	184
Reduct Vol:	0	0	0	0	0	0	0	0	0	0	0	0
Reduced Vol:	63	775	543	126	819	293	783	295	361	202	300	184
PCE Adj:	1.00	1.00	1.00	1.00	1.00	1.00	1.00	1.00	1.00	1.00	1.00	1.00
MLF Adj:	1.00	1.00	1.00	1.00	1.00	1.00	1.00	1.00	1.00	1.00	1.00	1.00
FinalVolume:	63	775	543	126	819	293	783	295	361	202	300	184
Saturation Flow Module:												
Sat/Lane:	1900	1900	1900	1900	1900	1900	1900	1900	1900	1900	1900	1900
Adjustment:	0.95	0.89	0.89	0.95	0.91	0.91	0.92	0.87	0.87	0.95	0.90	0.90
Lanes:	1.00	1.18	0.82	1.00	1.47	0.53	2.00	1.00	1.00	1.00	1.24	0.76
Final Sat.:	1805	1991	1395	1805	2555	914	3502	1657	1657	1805	2110	1294
Capacity Analysis Module:												
Vol/Sat:	0.03	0.39	0.39	0.07	0.32	0.32	0.22	0.18	0.22	0.11	0.14	0.14
Crit Moves:		****		****			****				****	
Green/Cycle:	0.05	0.47	0.47	0.08	0.50	0.50	0.27	0.29	0.29	0.15	0.17	0.17
Volume/Cap:	0.64	0.82	0.82	0.82	0.64	0.64	0.82	0.61	0.74	0.74	0.82	0.82
Delay/Veh:	59.5	26.5	26.5	74.2	19.1	19.1	40.2	31.4	35.4	51.2	49.2	49.2
User DelAdj:	1.00	1.00	1.00	1.00	1.00	1.00	1.00	1.00	1.00	1.00	1.00	1.00
AdjDel/Veh:	59.5	26.5	26.5	74.2	19.1	19.1	40.2	31.4	35.4	51.2	49.2	49.2
LOS by Move:	E	C	C	E	B	B	D	C	D	D	D	D
HCM2kAvgQ:	3	21	21	6	14	14	14	9	12	8	10	10

Note: Queue reported is the number of cars per lane.

City of Murrieta General Plan
Existing General Plan
PM Peak Hour

Level Of Service Computation Report
2000 HCM Operations Method (Future Volume Alternative)

Intersection #107 Leon Road & Keller Road

Cycle (sec): 100 | Critical Vol./Cap.(X): 0.325
Loss Time (sec): 0 (Y+R=4.0 sec) | Average Delay (sec/veh): 16.0
Optimal Cycle: 28 | Level Of Service: B

Street Name:	Leon Road						Keller Road					
Approach:	North Bound			South Bound			East Bound			West Bound		
Movement:	L - T - R			L - T - R			L - T - R			L - T - R		
Control:	Protected			Permitted			Protected			Permitted		
Rights:	Include			Include			Include			Include		
Min. Green:	0	0	0	0	0	0	0	0	0	0	0	0
Lanes:	1 0	1	1 0	1 0	1	1 0	1 0	1	1 0	1 0	1	1 0
Volume Module:												
Base Vol:	66	837	0	0	609	76	80	19	270	15	181	3
Growth Adj:	1.00	1.00	1.00	1.00	1.00	1.00	1.00	1.00	1.00	1.00	1.00	1.00
Initial Bse:	66	837	0	0	609	76	80	19	270	15	181	3
Added Vol:	0	0	0	0	0	0	0	0	0	0	0	0
PasserByVol:	0	0	0	0	0	0	0	0	0	0	0	0
Initial Fut:	66	837	0	0	609	76	80	19	270	15	181	3
User Adj:	1.00	1.00	1.00	1.00	1.00	1.00	1.00	1.00	1.00	1.00	1.00	1.00
PHF Adj:	1.00	1.00	1.00	1.00	1.00	1.00	1.00	1.00	1.00	1.00	1.00	1.00
PHF Volume:	66	837	0	0	609	76	80	19	270	15	181	3
Reduct Vol:	0	0	0	0	0	0	0	0	0	0	0	0
Reduced Vol:	66	837	0	0	609	76	80	19	270	15	181	3
PCE Adj:	1.00	1.00	1.00	1.00	1.00	1.00	1.00	1.00	1.00	1.00	1.00	1.00
MLF Adj:	1.00	1.00	1.00	1.00	1.00	1.00	1.00	1.00	1.00	1.00	1.00	1.00
FinalVolume:	66	837	0	0	609	76	80	19	270	15	181	3
Saturation Flow Module:												
Sat/Lane:	1900	1900	1900	1900	1900	1900	1900	1900	1900	1900	1900	1900
Adjustment:	0.95	0.95	0.95	1.00	0.93	0.93	0.95	0.82	0.82	0.33	0.95	0.95
Lanes:	1.00	2.00	0.00	1.00	1.78	0.22	1.00	1.00	1.00	1.00	1.97	0.03
Final Sat.:	1805	3610	0	1900	3155	394	1805	1552	1552	633	3544	59
Capacity Analysis Module:												
Vol/Sat:	0.04	0.23	0.00	0.00	0.19	0.19	0.04	0.01	0.17	0.02	0.05	0.05
Crit Moves:	****				****		****				****	
Green/Cycle:	0.11	0.71	0.00	0.00	0.59	0.59	0.14	0.29	0.29	0.16	0.16	0.16
Volume/Cap:	0.33	0.33	0.00	0.00	0.32	0.32	0.32	0.04	0.59	0.15	0.33	0.33
Delay/Veh:	41.8	5.7	0.0	0.0	10.3	10.3	39.8	25.3	32.2	37.1	37.8	37.8
User DelAdj:	1.00	1.00	1.00	1.00	1.00	1.00	1.00	1.00	1.00	1.00	1.00	1.00
AdjDel/Veh:	41.8	5.7	0.0	0.0	10.3	10.3	39.8	25.3	32.2	37.1	37.8	37.8
LOS by Move:	D	A	A	A	B	B	D	C	C	D	D	D
HCM2kAvgQ:	2	5	0	0	6	6	2	0	8	1	3	3

Note: Queue reported is the number of cars per lane.

City of Murrieta General Plan
Existing General Plan
PM Peak Hour

Level Of Service Computation Report
2000 HCM Operations Method (Future Volume Alternative)

Intersection #108 Winchester Road - SR-79 & Keller Road

Cycle (sec): 100 | Critical Vol./Cap.(X): 0.534
Loss Time (sec): 0 (Y+R=4.0 sec) | Average Delay (sec/veh): 1.2
Optimal Cycle: 40 | Level Of Service: A

Street Name:	Winchester Road - SR-79						Keller Road					
Approach:	North Bound			South Bound			East Bound			West Bound		
Movement:	L - T - R			L - T - R			L - T - R			L - T - R		
Control:	Protected			Protected			Permitted			Permitted		
Rights:	Include			Include			Include			Include		
Min. Green:	0	0	0	0	0	0	0	0	0	0	0	0
Lanes:	1 0	2 1	0	1 0	2 1	0	1 0	1 1	0	1 0	1 1	0
Volume Module:												
Base Vol:	0	2596	37	12	2148	1	0	20	1	13	13	30
Growth Adj:	1.00	1.00	1.00	1.00	1.00	1.00	1.00	1.00	1.00	1.00	1.00	1.00
Initial Bse:	0	2596	37	12	2148	1	0	20	1	13	13	30
Added Vol:	0	0	0	0	0	0	0	0	0	0	0	0
PasserByVol:	0	0	0	0	0	0	0	0	0	0	0	0
Initial Fut:	0	2596	37	12	2148	1	0	20	1	13	13	30
User Adj:	1.00	1.00	1.00	1.00	1.00	1.00	1.00	1.00	1.00	1.00	1.00	1.00
PHF Adj:	1.00	1.00	1.00	1.00	1.00	1.00	1.00	1.00	1.00	1.00	1.00	1.00
PHF Volume:	0	2596	37	12	2148	1	0	20	1	13	13	30
Reduct Vol:	0	0	0	0	0	0	0	0	0	0	0	0
Reduced Vol:	0	2596	37	12	2148	1	0	20	1	13	13	30
PCE Adj:	1.00	1.00	1.00	1.00	1.00	1.00	1.00	1.00	1.00	1.00	1.00	1.00
MLF Adj:	1.00	1.00	1.00	1.00	1.00	1.00	1.00	1.00	1.00	1.00	1.00	1.00
FinalVolume:	0	2596	37	12	2148	1	0	20	1	13	13	30
Saturation Flow Module:												
Sat/Lane:	1900	1900	1900	1900	1900	1900	1900	1900	1900	1900	1900	1900
Adjustment:	1.00	0.91	0.91	0.95	0.91	0.91	1.00	0.94	0.94	1.00	0.85	0.85
Lanes:	1.00	2.96	0.04	1.00	2.99	0.01	1.00	1.90	0.10	1.00	1.00	1.00
Final Sat.:	1900	5104	73	1805	5185	2	1900	3414	171	1900	1615	1615
Capacity Analysis Module:												
Vol/Sat:	0.00	0.51	0.51	0.01	0.41	0.41	0.00	0.01	0.01	0.01	0.01	0.02
Crit Moves:		****		****								****
Green/Cycle:	0.00	0.95	0.95	0.01	0.97	0.97	0.00	0.03	0.03	0.03	0.03	0.03
Volume/Cap:	0.00	0.53	0.53	0.53	0.43	0.43	0.00	0.17	0.17	0.18	0.23	0.53
Delay/Veh:	0.0	0.3	0.3	71.8	0.2	0.2	0.0	47.5	47.5	48.1	47.6	54.3
User DelAdj:	1.00	1.00	1.00	1.00	1.00	1.00	1.00	1.00	1.00	1.00	1.00	1.00
AdjDel/Veh:	0.0	0.3	0.3	71.8	0.2	0.2	0.0	47.5	47.5	48.1	47.6	54.3
LOS by Move:	A	A	A	E	A	A	A	D	D	D	D	D
HCM2kAvgQ:	0	4	4	1	2	2	0	0	0	1	1	2

Note: Queue reported is the number of cars per lane.

City of Murrieta General Plan
Existing General Plan
PM Peak Hour

Level Of Service Computation Report
2000 HCM Operations Method (Future Volume Alternative)

Intersection #112 Leon Road & Jean Nicholas

Cycle (sec): 100 | Critical Vol./Cap.(X): 0.580
Loss Time (sec): 0 (Y+R=4.0 sec) | Average Delay (sec/veh): 23.3
Optimal Cycle: 54 | Level Of Service: C

Street Name:	Leon Road						Jean Nicholas					
Approach:	North Bound			South Bound			East Bound			West Bound		
Movement:	L - T - R			L - T - R			L - T - R			L - T - R		
Control:	Protected			Protected			Protected			Protected		
Rights:	Include			Include			Include			Include		
Min. Green:	0	0	0	0	0	0	0	0	0	0	0	0
Lanes:	1 0	1 1	0	1 0	1 1	0	1 0	1 1	0	1 0	1 1	0
Volume Module:												
Base Vol:	3	524	233	236	556	12	2	103	13	117	144	368
Growth Adj:	1.00	1.00	1.00	1.00	1.00	1.00	1.00	1.00	1.00	1.00	1.00	1.00
Initial Bse:	3	524	233	236	556	12	2	103	13	117	144	368
Added Vol:	0	0	0	0	0	0	0	0	0	0	0	0
PasserByVol:	0	0	0	0	0	0	0	0	0	0	0	0
Initial Fut:	3	524	233	236	556	12	2	103	13	117	144	368
User Adj:	1.00	1.00	1.00	1.00	1.00	1.00	1.00	1.00	1.00	1.00	1.00	1.00
PHF Adj:	1.00	1.00	1.00	1.00	1.00	1.00	1.00	1.00	1.00	1.00	1.00	1.00
PHF Volume:	3	524	233	236	556	12	2	103	13	117	144	368
Reduct Vol:	0	0	0	0	0	0	0	0	0	0	0	0
Reduced Vol:	3	524	233	236	556	12	2	103	13	117	144	368
PCE Adj:	1.00	1.00	1.00	1.00	1.00	1.00	1.00	1.00	1.00	1.00	1.00	1.00
MLF Adj:	1.00	1.00	1.00	1.00	1.00	1.00	1.00	1.00	1.00	1.00	1.00	1.00
FinalVolume:	3	524	233	236	556	12	2	103	13	117	144	368
Saturation Flow Module:												
Sat/Lane:	1900	1900	1900	1900	1900	1900	1900	1900	1900	1900	1900	1900
Adjustment:	0.95	0.91	0.91	0.95	0.95	0.95	0.95	0.93	0.93	0.95	0.85	0.85
Lanes:	1.00	1.38	0.62	1.00	1.96	0.04	1.00	1.78	0.22	1.00	1.00	1.00
Final Sat.:	1805	2384	1060	1805	3523	76	1805	3151	398	1805	1610	1610
Capacity Analysis Module:												
Vol/Sat:	0.00	0.22	0.22	0.13	0.16	0.16	0.00	0.03	0.03	0.06	0.09	0.23
Crit Moves:		****		****			****					****
Green/Cycle:	0.01	0.38	0.38	0.23	0.60	0.60	0.00	0.13	0.13	0.26	0.39	0.39
Volume/Cap:	0.26	0.58	0.58	0.58	0.26	0.26	0.58	0.25	0.25	0.25	0.23	0.58
Delay/Veh:	61.5	25.4	25.4	36.6	9.7	9.7	192.9	39.2	39.2	29.3	20.2	24.8
User DelAdj:	1.00	1.00	1.00	1.00	1.00	1.00	1.00	1.00	1.00	1.00	1.00	1.00
AdjDel/Veh:	61.5	25.4	25.4	36.6	9.7	9.7	192.9	39.2	39.2	29.3	20.2	24.8
LOS by Move:	E	C	C	D	A	A	F	D	D	C	C	C
HCM2kAvgQ:	0	10	10	7	4	4	0	2	2	3	3	10

Note: Queue reported is the number of cars per lane.

City of Murrieta General Plan
Existing General Plan
PM Peak Hour

Level Of Service Computation Report
2000 HCM Operations Method (Future Volume Alternative)

Intersection #122 Meadowlark Lane - Whitewood Road & Clinton Keith Road

Cycle (sec): 100 Critical Vol./Cap.(X): 1.154
Loss Time (sec): 0 (Y+R=4.0 sec) Average Delay (sec/veh): 62.9
Optimal Cycle: 180 Level Of Service: E

Street Name:	Meadowlark Lane - Whitewood Road						Clinton Keith Road					
Approach:	North Bound			South Bound			East Bound			West Bound		
Movement:	L -	T -	R	L -	T -	R	L -	T -	R	L -	T -	R
Control:	Protected			Protected			Protected			Protected		
Rights:	Include			Include			Include			Include		
Min. Green:	0	0	0	0	0	0	0	0	0	0	0	0
Lanes:	2 0	2 0	1	2 0	1 1	0	2 0	3 0	1	2 0	3 0	1
Volume Module:												
Base Vol:	596	207	691	495	226	321	162	1279	379	430	768	869
Growth Adj:	1.00	1.00	1.00	1.00	1.00	1.00	1.00	1.00	1.00	1.00	1.00	1.00
Initial Bse:	596	207	691	495	226	321	162	1279	379	430	768	869
Added Vol:	0	0	0	0	0	0	0	0	0	0	0	0
PasserByVol:	0	0	0	0	0	0	0	0	0	0	0	0
Initial Fut:	596	207	691	495	226	321	162	1279	379	430	768	869
User Adj:	1.00	1.00	1.00	1.00	1.00	1.00	1.00	1.00	1.00	1.00	1.00	1.00
PHF Adj:	1.00	1.00	1.00	1.00	1.00	1.00	1.00	1.00	1.00	1.00	1.00	1.00
PHF Volume:	596	207	691	495	226	321	162	1279	379	430	768	869
Reduct Vol:	0	0	0	0	0	0	0	0	0	0	0	0
Reduced Vol:	596	207	691	495	226	321	162	1279	379	430	768	869
PCE Adj:	1.00	1.00	1.00	1.00	1.00	1.00	1.00	1.00	1.00	1.00	1.00	1.00
MLF Adj:	1.00	1.00	1.00	1.00	1.00	1.00	1.00	1.00	1.00	1.00	1.00	1.00
FinalVolume:	596	207	691	495	226	321	162	1279	379	430	768	869
Saturation Flow Module:												
Sat/Lane:	1900	1900	1900	1900	1900	1900	1900	1900	1900	1900	1900	1900
Adjustment:	0.92	0.95	0.85	0.92	0.87	0.87	0.92	0.91	0.85	0.92	0.91	0.85
Lanes:	2.00	2.00	1.00	2.00	1.00	1.00	2.00	3.00	1.00	2.00	3.00	1.00
Final Sat.:	3502	3610	1615	3502	1646	1646	3502	5187	1615	3502	5187	1615
Capacity Analysis Module:												
Vol/Sat:	0.17	0.06	0.43	0.14	0.14	0.19	0.05	0.25	0.23	0.12	0.15	0.54
Crit Moves:			****	****			****					****
Green/Cycle:	0.23	0.37	0.37	0.12	0.26	0.26	0.04	0.34	0.34	0.17	0.47	0.47
Volume/Cap:	0.74	0.15	1.15	1.15	0.52	0.74	1.15	0.73	0.69	0.73	0.32	1.15
Delay/Veh:	39.4	21.0	118.5	136.5	31.9	37.7	171.1	30.7	32.5	44.0	16.8	110.6
User DelAdj:	1.00	1.00	1.00	1.00	1.00	1.00	1.00	1.00	1.00	1.00	1.00	1.00
AdjDel/Veh:	39.4	21.0	118.5	136.5	31.9	37.7	171.1	30.7	32.5	44.0	16.8	110.6
LOS by Move:	D	C	F	F	C	D	F	C	C	D	B	F
HCM2kAvgQ:	10	2	36	15	7	11	6	14	11	8	5	44

Note: Queue reported is the number of cars per lane.

City of Murrieta General Plan
Existing General Plan
PM Peak Hour

Level Of Service Computation Report
2000 HCM Operations Method (Future Volume Alternative)

Intersection #138 Jefferson Avenue & Cherry Street

Cycle (sec): 100 Critical Vol./Cap.(X): 0.950
Loss Time (sec): 0 (Y+R=4.0 sec) Average Delay (sec/veh): 30.7
Optimal Cycle: 180 Level Of Service: C

Street Name:	Jefferson Avenue						Cherry Street					
Approach:	North Bound			South Bound			East Bound			West Bound		
Movement:	L -	T -	R	L -	T -	R	L -	T -	R	L -	T -	R
Control:	Protected			Protected			Protected			Protected		
Rights:	Include			Include			Include			Include		
Min. Green:	0	0	0	0	0	0	0	0	0	0	0	0
Lanes:	1 0	2 0	1	1 0	1 1	0	1 0	2 1	0	1 0	2 1	0
Volume Module:												
Base Vol:	33	1291	786	145	783	5	2	1002	47	127	785	616
Growth Adj:	1.00	1.00	1.00	1.00	1.00	1.00	1.00	1.00	1.00	1.00	1.00	1.00
Initial Bse:	33	1291	786	145	783	5	2	1002	47	127	785	616
Added Vol:	0	0	0	0	0	0	0	0	0	0	0	0
PasserByVol:	0	0	0	0	0	0	0	0	0	0	0	0
Initial Fut:	33	1291	786	145	783	5	2	1002	47	127	785	616
User Adj:	1.00	1.00	1.00	1.00	1.00	1.00	1.00	1.00	1.00	1.00	1.00	1.00
PHF Adj:	1.00	1.00	1.00	1.00	1.00	1.00	1.00	1.00	1.00	1.00	1.00	1.00
PHF Volume:	33	1291	786	145	783	5	2	1002	47	127	785	616
Reduct Vol:	0	0	0	0	0	0	0	0	0	0	0	0
Reduced Vol:	33	1291	786	145	783	5	2	1002	47	127	785	616
PCE Adj:	1.00	1.00	1.00	1.00	1.00	1.00	1.00	1.00	1.00	1.00	1.00	1.00
MLF Adj:	1.00	1.00	1.00	1.00	1.00	1.00	1.00	1.00	1.00	1.00	1.00	1.00
FinalVolume:	33	1291	786	145	783	5	2	1002	47	127	785	616
Saturation Flow Module:												
Sat/Lane:	1900	1900	1900	1900	1900	1900	1900	1900	1900	1900	1900	1900
Adjustment:	0.95	0.95	0.85	0.95	0.95	0.95	0.95	0.90	0.90	0.95	0.85	0.85
Lanes:	1.00	2.00	1.00	1.00	1.99	0.01	1.00	2.87	0.13	1.00	2.00	1.00
Final Sat.:	1805	3610	1615	1805	3584	23	1805	4920	231	1805	3230	1615
Capacity Analysis Module:												
Vol/Sat:	0.02	0.36	0.49	0.08	0.22	0.22	0.00	0.20	0.20	0.07	0.24	0.38
Crit Moves:			****	****			****					****
Green/Cycle:	0.05	0.51	0.51	0.08	0.55	0.55	0.00	0.30	0.30	0.10	0.40	0.40
Volume/Cap:	0.40	0.70	0.95	0.95	0.40	0.40	0.95	0.68	0.68	0.68	0.61	0.95
Delay/Veh:	49.4	19.7	43.2	103.2	13.0	13.0	618.1	32.1	32.1	53.0	24.1	42.2
User DelAdj:	1.00	1.00	1.00	1.00	1.00	1.00	1.00	1.00	1.00	1.00	1.00	1.00
AdjDel/Veh:	49.4	19.7	43.2	103.2	13.0	13.0	618.1	32.1	32.1	53.0	24.1	42.2
LOS by Move:	D	B	D	F	B	B	F	C	C	D	C	D
HCM2kAvgQ:	1	17	28	8	7	7	1	11	11	5	11	25

Note: Queue reported is the number of cars per lane.

City of Murrieta General Plan
Existing General Plan
PM Peak Hour

Level Of Service Computation Report
2000 HCM Operations Method (Future Volume Alternative)

Intersection #141 Jefferson Ave & Nutmeg St

Cycle (sec): 100 Critical Vol./Cap.(X): 0.928
Loss Time (sec): 0 (Y+R=4.0 sec) Average Delay (sec/veh): 37.6
Optimal Cycle: 180 Level Of Service: D

Street Name:	Jefferson Ave						Nutmeg St					
Approach:	North Bound			South Bound			East Bound			West Bound		
Movement:	L -	T -	R	L -	T -	R	L -	T -	R	L -	T -	R
Control:	Protected			Protected			Protected			Protected		
Rights:	Include			Include			Include			Include		
Min. Green:	0	0	0	0	0	0	0	0	0	0	0	0
Lanes:	1 0	2 1	0	1 0	2 1	0	1 0	1 1	0	1 0	1 1	0
Volume Module:												
Base Vol:	635	1173	348	91	1196	94	64	133	293	259	181	112
Growth Adj:	1.00	1.00	1.00	1.00	1.00	1.00	1.00	1.00	1.00	1.00	1.00	1.00
Initial Bse:	635	1173	348	91	1196	94	64	133	293	259	181	112
Added Vol:	0	0	0	0	0	0	0	0	0	0	0	0
PasserByVol:	0	0	0	0	0	0	0	0	0	0	0	0
Initial Fut:	635	1173	348	91	1196	94	64	133	293	259	181	112
User Adj:	1.00	1.00	1.00	1.00	1.00	1.00	1.00	1.00	1.00	1.00	1.00	1.00
PHF Adj:	1.00	1.00	1.00	1.00	1.00	1.00	1.00	1.00	1.00	1.00	1.00	1.00
PHF Volume:	635	1173	348	91	1196	94	64	133	293	259	181	112
Reduct Vol:	0	0	0	0	0	0	0	0	0	0	0	0
Reduced Vol:	635	1173	348	91	1196	94	64	133	293	259	181	112
PCE Adj:	1.00	1.00	1.00	1.00	1.00	1.00	1.00	1.00	1.00	1.00	1.00	1.00
MLF Adj:	1.00	1.00	1.00	1.00	1.00	1.00	1.00	1.00	1.00	1.00	1.00	1.00
FinalVolume:	635	1173	348	91	1196	94	64	133	293	259	181	112
Saturation Flow Module:												
Sat/Lane:	1900	1900	1900	1900	1900	1900	1900	1900	1900	1900	1900	1900
Adjustment:	0.95	0.88	0.88	0.95	0.90	0.90	0.95	0.85	0.85	0.95	0.90	0.90
Lanes:	1.00	2.31	0.69	1.00	2.78	0.22	1.00	1.00	1.00	1.00	1.24	0.76
Final Sat.:	1805	3864	1146	1805	4756	374	1805	1619	1619	1805	2103	1301
Capacity Analysis Module:												
Vol/Sat:	0.35	0.30	0.30	0.05	0.25	0.25	0.04	0.08	0.18	0.14	0.09	0.09
Crit Moves:	****				****				****	****		
Green/Cycle:	0.38	0.56	0.56	0.09	0.27	0.27	0.10	0.20	0.20	0.15	0.25	0.25
Volume/Cap:	0.93	0.54	0.54	0.54	0.93	0.93	0.35	0.42	0.93	0.93	0.35	0.35
Delay/Veh:	48.6	14.3	14.3	47.0	46.5	46.5	42.9	35.6	64.7	76.9	31.2	31.2
User DelAdj:	1.00	1.00	1.00	1.00	1.00	1.00	1.00	1.00	1.00	1.00	1.00	1.00
AdjDel/Veh:	48.6	14.3	14.3	47.0	46.5	46.5	42.9	35.6	64.7	76.9	31.2	31.2
LOS by Move:	D	B	B	D	D	D	D	D	E	E	C	C
HCM2kAvgQ:	23	11	11	3	19	19	2	4	13	12	4	4

Note: Queue reported is the number of cars per lane.

City of Murrieta General Plan
Existing General Plan
PM Peak Hour

Level Of Service Computation Report
2000 HCM Operations Method (Future Volume Alternative)

Intersection #142 Jefferson Ave & Magnolia St

Cycle (sec): 100 Critical Vol./Cap.(X): 0.488
Loss Time (sec): 0 (Y+R=4.0 sec) Average Delay (sec/veh): 7.8
Optimal Cycle: 45 Level Of Service: A

Street Name:	Jefferson Ave						Magnolia St					
Approach:	North Bound			South Bound			East Bound			West Bound		
Movement:	L -	T -	R	L -	T -	R	L -	T -	R	L -	T -	R
Control:	Protected			Protected			Protected			Protected		
Rights:	Include			Include			Include			Include		
Min. Green:	0	0	0	0	0	0	0	0	0	0	0	0
Lanes:	1 0	2 1	0	1 0	2 1	0	1 0	0 1	0	1 0	0 1	0
Volume Module:												
Base Vol:	131	2054	12	9	1643	93	123	4	49	7	4	13
Growth Adj:	1.00	1.00	1.00	1.00	1.00	1.00	1.00	1.00	1.00	1.00	1.00	1.00
Initial Bse:	131	2054	12	9	1643	93	123	4	49	7	4	13
Added Vol:	0	0	0	0	0	0	0	0	0	0	0	0
PasserByVol:	0	0	0	0	0	0	0	0	0	0	0	0
Initial Fut:	131	2054	12	9	1643	93	123	4	49	7	4	13
User Adj:	1.00	1.00	1.00	1.00	1.00	1.00	1.00	1.00	1.00	1.00	1.00	1.00
PHF Adj:	1.00	1.00	1.00	1.00	1.00	1.00	1.00	1.00	1.00	1.00	1.00	1.00
PHF Volume:	131	2054	12	9	1643	93	123	4	49	7	4	13
Reduct Vol:	0	0	0	0	0	0	0	0	0	0	0	0
Reduced Vol:	131	2054	12	9	1643	93	123	4	49	7	4	13
PCE Adj:	1.00	1.00	1.00	1.00	1.00	1.00	1.00	1.00	1.00	1.00	1.00	1.00
MLF Adj:	1.00	1.00	1.00	1.00	1.00	1.00	1.00	1.00	1.00	1.00	1.00	1.00
FinalVolume:	131	2054	12	9	1643	93	123	4	49	7	4	13
Saturation Flow Module:												
Sat/Lane:	1900	1900	1900	1900	1900	1900	1900	1900	1900	1900	1900	1900
Adjustment:	0.95	0.91	0.91	0.95	0.90	0.90	0.95	0.86	0.86	0.95	0.89	0.89
Lanes:	1.00	2.98	0.02	1.00	2.84	0.16	1.00	0.08	0.92	1.00	0.24	0.76
Final Sat.:	1805	5152	30	1805	4870	276	1805	123	1512	1805	396	1286
Capacity Analysis Module:												
Vol/Sat:	0.07	0.40	0.40	0.00	0.34	0.34	0.07	0.03	0.03	0.00	0.01	0.01
Crit Moves:	****				****		****				****	
Green/Cycle:	0.15	0.83	0.83	0.01	0.69	0.69	0.14	0.14	0.14	0.02	0.02	0.02
Volume/Cap:	0.49	0.48	0.48	0.48	0.49	0.49	0.49	0.23	0.23	0.23	0.49	0.49
Delay/Veh:	40.5	2.5	2.5	67.4	7.3	7.3	41.2	38.4	38.4	52.2	58.8	58.8
User DelAdj:	1.00	1.00	1.00	1.00	1.00	1.00	1.00	1.00	1.00	1.00	1.00	1.00
AdjDel/Veh:	40.5	2.5	2.5	67.4	7.3	7.3	41.2	38.4	38.4	52.2	58.8	58.8
LOS by Move:	D	A	A	E	A	A	D	D	D	D	E	E
HCM2kAvgQ:	4	7	7	1	9	9	4	2	2	0	1	1

Note: Queue reported is the number of cars per lane.

City of Murrieta General Plan
Existing General Plan
PM Peak Hour

Level Of Service Computation Report
2000 HCM Operations Method (Future Volume Alternative)

Intersection #149 Monroe Ave & Murrieta Hot Springs Rd

Cycle (sec): 100 | Critical Vol./Cap.(X): 0.569
Loss Time (sec): 0 (Y+R=4.0 sec) | Average Delay (sec/veh): 16.4
Optimal Cycle: 53 | Level Of Service: B

Street Name:	Monroe Ave						Murrieta Hot Springs Rd					
Approach:	North Bound			South Bound			East Bound			West Bound		
Movement:	L	T	R	L	T	R	L	T	R	L	T	R
Control:	Protected			Protected			Protected			Protected		
Rights:	Include			Ovl			Ovl			Include		
Min. Green:	0	0	0	0	0	0	0	0	0	0	0	0
Lanes:	1 0	2 0	1	1 0	2 0	1	1 0	4 0	1	1 0	3 1	0
Volume Module:												
Base Vol:	165	260	195	1	262	131	186	2601	135	34	2056	31
Growth Adj:	1.00	1.00	1.00	1.00	1.00	1.00	1.00	1.00	1.00	1.00	1.00	1.00
Initial Bse:	165	260	195	1	262	131	186	2601	135	34	2056	31
Added Vol:	0	0	0	0	0	0	0	0	0	0	0	0
PasserByVol:	0	0	0	0	0	0	0	0	0	0	0	0
Initial Fut:	165	260	195	1	262	131	186	2601	135	34	2056	31
User Adj:	1.00	1.00	1.00	1.00	1.00	1.00	1.00	1.00	1.00	1.00	1.00	1.00
PHF Adj:	1.00	1.00	1.00	1.00	1.00	1.00	1.00	1.00	1.00	1.00	1.00	1.00
PHF Volume:	165	260	195	1	262	131	186	2601	135	34	2056	31
Reduct Vol:	0	0	0	0	0	0	0	0	0	0	0	0
Reduced Vol:	165	260	195	1	262	131	186	2601	135	34	2056	31
PCE Adj:	1.00	1.00	1.00	1.00	1.00	1.00	1.00	1.00	1.00	1.00	1.00	1.00
MLF Adj:	1.00	1.00	1.00	1.00	1.00	1.00	1.00	1.00	1.00	1.00	1.00	1.00
FinalVolume:	165	260	195	1	262	131	186	2601	135	34	2056	31
Saturation Flow Module:												
Sat/Lane:	1900	1900	1900	1900	1900	1900	1900	1900	1900	1900	1900	1900
Adjustment:	0.95	0.95	0.85	0.95	0.95	0.85	0.95	0.91	0.85	0.95	0.91	0.91
Lanes:	1.00	2.00	1.00	1.00	2.00	1.00	1.00	4.00	1.00	1.00	3.94	0.06
Final Sat.:	1805	3610	1615	1805	3610	1615	1805	6916	1615	1805	6800	103
Capacity Analysis Module:												
Vol/Sat:	0.09	0.07	0.12	0.00	0.07	0.08	0.10	0.38	0.08	0.02	0.30	0.30
Crit Moves:	****				****		****				****	
Green/Cycle:	0.16	0.29	0.29	0.00	0.13	0.31	0.18	0.68	0.84	0.03	0.53	0.53
Volume/Cap:	0.57	0.25	0.42	0.42	0.57	0.26	0.57	0.55	0.10	0.55	0.57	0.57
Delay/Veh:	41.5	27.5	29.6	140.0	42.7	26.3	39.8	8.5	1.5	58.2	16.0	16.0
User DelAdj:	1.00	1.00	1.00	1.00	1.00	1.00	1.00	1.00	1.00	1.00	1.00	1.00
AdjDel/Veh:	41.5	27.5	29.6	140.0	42.7	26.3	39.8	8.5	1.5	58.2	16.0	16.0
LOS by Move:	D	C	C	F	D	C	D	A	A	E	B	B
HCM2kAvgQ:	5	3	5	0	5	3	6	11	1	2	12	12

Note: Queue reported is the number of cars per lane.

City of Murrieta General Plan
Existing General Plan
PM Peak Hour

Level Of Service Computation Report
2000 HCM Operations Method (Future Volume Alternative)

Intersection #158 Adams Ave & Guava St

Cycle (sec): 100 | Critical Vol./Cap.(X): 0.348
Loss Time (sec): 0 (Y+R=4.0 sec) | Average Delay (sec/veh): 13.3
Optimal Cycle: 22 | Level Of Service: B

Street Name:	Adams Ave						Guava St					
Approach:	North Bound			South Bound			East Bound			West Bound		
Movement:	L	T	R	L	T	R	L	T	R	L	T	R
Control:	Permitted			Permitted			Permitted			Permitted		
Rights:	Include			Include			Include			Include		
Min. Green:	0	0	0	0	0	0	0	0	0	0	0	0
Lanes:	1 0	1 1	0	1 0	1 1	0	1 0	0 1	0	1 0	0 1	0
Volume Module:												
Base Vol:	31	181	21	70	19	178	72	275	134	5	262	158
Growth Adj:	1.00	1.00	1.00	1.00	1.00	1.00	1.00	1.00	1.00	1.00	1.00	1.00
Initial Bse:	31	181	21	70	19	178	72	275	134	5	262	158
Added Vol:	0	0	0	0	0	0	0	0	0	0	0	0
PasserByVol:	0	0	0	0	0	0	0	0	0	0	0	0
Initial Fut:	31	181	21	70	19	178	72	275	134	5	262	158
User Adj:	1.00	1.00	1.00	1.00	1.00	1.00	1.00	1.00	1.00	1.00	1.00	1.00
PHF Adj:	1.00	1.00	1.00	1.00	1.00	1.00	1.00	1.00	1.00	1.00	1.00	1.00
PHF Volume:	31	181	21	70	19	178	72	275	134	5	262	158
Reduct Vol:	0	0	0	0	0	0	0	0	0	0	0	0
Reduced Vol:	31	181	21	70	19	178	72	275	134	5	262	158
PCE Adj:	1.00	1.00	1.00	1.00	1.00	1.00	1.00	1.00	1.00	1.00	1.00	1.00
MLF Adj:	1.00	1.00	1.00	1.00	1.00	1.00	1.00	1.00	1.00	1.00	1.00	1.00
FinalVolume:	31	181	21	70	19	178	72	275	134	5	262	158
Saturation Flow Module:												
Sat/Lane:	1900	1900	1900	1900	1900	1900	1900	1900	1900	1900	1900	1900
Adjustment:	0.54	0.93	0.93	0.54	0.82	0.82	0.44	0.95	0.95	0.45	0.94	0.94
Lanes:	1.00	1.79	0.21	1.00	1.00	1.00	1.00	0.67	0.33	1.00	0.62	0.38
Final Sat.:	1032	3183	369	1022	1560	1560	834	1215	592	849	1119	675
Capacity Analysis Module:												
Vol/Sat:	0.03	0.06	0.06	0.07	0.01	0.11	0.09	0.23	0.23	0.01	0.23	0.23
Crit Moves:						****					****	
Green/Cycle:	0.33	0.33	0.33	0.33	0.33	0.33	0.67	0.67	0.67	0.67	0.67	0.67
Volume/Cap:	0.09	0.17	0.17	0.21	0.04	0.35	0.13	0.34	0.34	0.01	0.35	0.35
Delay/Veh:	23.4	24.0	24.0	24.6	22.9	25.9	6.0	7.1	7.1	5.4	7.2	7.2
User DelAdj:	1.00	1.00	1.00	1.00	1.00	1.00	1.00	1.00	1.00	1.00	1.00	1.00
AdjDel/Veh:	23.4	24.0	24.0	24.6	22.9	25.9	6.0	7.1	7.1	5.4	7.2	7.2
LOS by Move:	C	C	C	C	C	C	A	A	A	A	A	A
HCM2kAvgQ:	1	2	2	2	0	4	1	5	5	0	6	6

Note: Queue reported is the number of cars per lane.

RECOMMENDED SCENARIO

City of Murrieta General Plan
Future Proposed General Plan
AM Peak Hour

Scenario Report

Scenario:	Future Proposed GP AM
Command:	Future Proposed GP AM
Volume:	Future Proposed GP AM
Geometry:	Future
Impact Fee:	Default Impact Fee
Trip Generation:	Default Trip Generation
Trip Distribution:	Default Trip Distribution
Paths:	Default Path
Routes:	Default Route
Configuration:	Future Proposed GP AM

City of Murrieta General Plan
Future Proposed General Plan
AM Peak Hour

Turning Movement Report

Volume	Northbound			Southbound			Eastbound			Westbound			Total
Type	Left	Thru	Right	Left	Thru	Right	Left	Thru	Right	Left	Thru	Right	Volume
#1 Menifee Road & Scott Road													
Base	238	358	374	253	845	93	102	510	316	864	479	251	4683
Added	0	0	0	0	0	0	0	0	0	0	0	0	0
Total	238	358	374	253	845	93	102	510	316	864	479	251	4683
#2 Leon Road & Scott Road													
Base	0	0	0	0	0	0	0	0	0	0	0	0	0
Added	0	0	0	0	0	0	0	0	0	0	0	0	0
Total	0	0	0	0	0	0	0	0	0	0	0	0	0
#3 Winchester Road/SR-79 & Scott Road													
Base	110	1376	51	951	2658	75	117	178	68	17	151	963	6715
Added	0	0	0	0	0	0	0	0	0	0	0	0	0
Total	110	1376	51	951	2658	75	117	178	68	17	151	963	6715
#4 Antelope Road & Keller Road													
Base	0	0	0	0	0	0	0	0	0	0	0	0	0
Added	0	0	0	0	0	0	0	0	0	0	0	0	0
Total	0	0	0	0	0	0	0	0	0	0	0	0	0
#5 Menifee Road - Meadowlark Road & Keller Road													
Base	0	0	0	0	0	0	0	0	0	0	0	0	0
Added	0	0	0	0	0	0	0	0	0	0	0	0	0
Total	0	0	0	0	0	0	0	0	0	0	0	0	0
#6 Briggs Road & Keller Road													
Base	346	17	53	0	40	47	1	72	492	15	344	1	1428
Added	0	0	0	0	0	0	0	0	0	0	0	0	0
Total	346	17	53	0	40	47	1	72	492	15	344	1	1428
#7 Leon Road & Keller Road													
Base	0	0	0	0	0	0	0	0	0	0	0	0	0
Added	0	0	0	0	0	0	0	0	0	0	0	0	0
Total	0	0	0	0	0	0	0	0	0	0	0	0	0
#8 Winchester Road - SR-79 & Keller Road													
Base	0	0	0	0	0	0	0	0	0	0	0	0	0
Added	0	0	0	0	0	0	0	0	0	0	0	0	0
Total	0	0	0	0	0	0	0	0	0	0	0	0	0
#9 Antelope Road & Golden City Drive - Baxter Road													
Base	1	88	515	381	1070	27	1	75	11	397	203	604	3373
Added	0	0	0	0	0	0	0	0	0	0	0	0	0
Total	1	88	515	381	1070	27	1	75	11	397	203	604	3373

City of Murrieta General Plan
Future Proposed General Plan
AM Peak Hour

Volume Type	Northbound Left	Northbound Thru	Northbound Right	Southbound Left	Southbound Thru	Southbound Right	Eastbound Left	Eastbound Thru	Eastbound Right	Westbound Left	Westbound Thru	Westbound Right	Total Volume
#10 Whitewood Roa - /Meadowlark Road & Golden City Drive - Baxter Road													
Base	316	689	2	0	955	880	59	4	739	1	15	2	3662
Added	0	0	0	0	0	0	0	0	0	0	0	0	0
Total	316	689	2	0	955	880	59	4	739	1	15	2	3662
#11 Briggs Road & Baxter Road - Jean Nicholas													
Base	0	206	43	38	534	0	0	0	0	9	0	75	905
Added	0	0	0	0	0	0	0	0	0	0	0	0	0
Total	0	206	43	38	534	0	0	0	0	9	0	75	905
#12 Leon Road & Jean Nicholas													
Base	0	0	0	0	0	0	0	0	0	0	0	0	0
Added	0	0	0	0	0	0	0	0	0	0	0	0	0
Total	0	0	0	0	0	0	0	0	0	0	0	0	0
#13 Winchester Road - SR-79 & Nicholas - Skyview													
Base	138	1381	338	22	2896	33	37	330	132	106	327	166	5906
Added	0	0	0	0	0	0	0	0	0	0	0	0	0
Total	138	1381	338	22	2896	33	37	330	132	106	327	166	5906
#14 Antelope Road & Linnel Lane Extension													
Base	21	757	96	99	487	530	199	507	125	6	120	220	3167
Added	0	0	0	0	0	0	0	0	0	0	0	0	0
Total	21	757	96	99	487	530	199	507	125	6	120	220	3167
#15 Whitewood Road - Meadowlark Road & Linnel Lane Extension													
Base	18	797	678	281	1152	183	33	556	114	45	144	324	4325
Added	0	0	0	0	0	0	0	0	0	0	0	0	0
Total	18	797	678	281	1152	183	33	556	114	45	144	324	4325
#16 Leon Road & Max Gillis Road													
Base	417	107	396	383	363	152	100	470	767	631	322	182	4290
Added	0	0	0	0	0	0	0	0	0	0	0	0	0
Total	417	107	396	383	363	152	100	470	767	631	322	182	4290
#17 Winchester Road - SR-79 & Max Gillis - Thompson													
Base	200	1300	46	140	2198	729	609	165	279	31	298	39	6034
Added	0	0	0	0	0	0	0	0	0	0	0	0	0
Total	200	1300	46	140	2198	729	609	165	279	31	298	39	6034
#18 California Oaks Road & Clinton Keith Road													
Base	204	0	669	0	0	0	0	2680	307	773	1675	0	6308
Added	0	0	0	0	0	0	0	0	0	0	0	0	0
Total	204	0	669	0	0	0	0	2680	307	773	1675	0	6308

City of Murrieta General Plan
Future Proposed General Plan
AM Peak Hour

Volume Type	Northbound Left	Northbound Thru	Northbound Right	Southbound Left	Southbound Thru	Southbound Right	Eastbound Left	Eastbound Thru	Eastbound Right	Westbound Left	Westbound Thru	Westbound Right	Total Volume
#19 I-215 SB Off-Ramp & Clinton Keith Road													
Base	0	0	0	58	0	420	0	2401	496	0	2089	227	5691
Added	0	0	0	0	0	0	0	0	0	0	0	0	0
Total	0	0	0	58	0	420	0	2401	496	0	2089	227	5691
#20 I-215 NB Off Ramp & Clinton Keith Road													
Base	162	0	1393	0	0	0	0	1797	334	0	2305	233	6224
Added	0	0	0	0	0	0	0	0	0	0	0	0	0
Total	162	0	1393	0	0	0	0	1797	334	0	2305	233	6224
#21 Antelope Road & Clinton Keith Road													
Base	0	0	0	15	0	426	388	1869	0	0	1643	296	4637
Added	0	0	0	0	0	0	0	0	0	0	0	0	0
Total	0	0	0	15	0	426	388	1869	0	0	1643	296	4637
#22 Meadowlark Lane - Whitewood Road & Clinton Keith Road													
Base	0	0	0	0	0	0	0	0	0	0	0	0	0
Added	0	0	0	0	0	0	0	0	0	0	0	0	0
Total	0	0	0	0	0	0	0	0	0	0	0	0	0
#23 Liberty Road & Clinton Keith Road													
Base	65	0	217	0	0	0	0	1615	205	44	2610	0	4756
Added	0	0	0	0	0	0	0	0	0	0	0	0	0
Total	65	0	217	0	0	0	0	1615	205	44	2610	0	4756
#24 Leon Road & Clinton Keith Road													
Base	0	0	0	144	0	1537	396	1420	0	0	858	561	4916
Added	0	0	0	0	0	0	0	0	0	0	0	0	0
Total	0	0	0	144	0	1537	396	1420	0	0	858	561	4916
#25 Winchester Road - SR-79 & Benton Road													
Base	490	1366	368	96	2041	400	38	470	978	344	614	32	7237
Added	0	0	0	0	0	0	0	0	0	0	0	0	0
Total	490	1366	368	96	2041	400	38	470	978	344	614	32	7237
#26 Winchester Road - SR-79 & Via Mira Mosa													
Base	28	1593	798	319	2788	234	358	49	95	177	19	29	6487
Added	0	0	0	0	0	0	0	0	0	0	0	0	0
Total	28	1593	798	319	2788	234	358	49	95	177	19	29	6487
#27 Monroe Ave & Los Alamos													
Base	28	223	188	569	475	208	46	351	134	63	994	473	3752
Added	0	0	0	0	0	0	0	0	0	0	0	0	0
Total	28	223	188	569	475	208	46	351	134	63	994	473	3752

City of Murrieta General Plan
Future Proposed General Plan
AM Peak Hour

Volume Type	Northbound Left	Thru	Right	Southbound Left	Thru	Right	Eastbound Left	Thru	Right	Westbound Left	Thru	Right	Total Volume
#28 Jefferson Avenue & Murrieta Hot Springs Road													
Base	10	1074	495	919	1236	77	15	76	21	876	93	921	5813
Added	0	0	0	0	0	0	0	0	0	0	0	0	0
Total	10	1074	495	919	1236	77	15	76	21	876	93	921	5813
#29 Madison Avenue & Murrieta Hot Springs Road													
Base	127	67	324	183	184	156	117	1137	271	754	1769	74	5163
Added	0	0	0	0	0	0	0	0	0	0	0	0	0
Total	127	67	324	183	184	156	117	1137	271	754	1769	74	5163
#30 I-15 SB Off-Ramp & Murrieta Hot Springs Road													
Base	0	0	0	808	0	421	0	1385	215	0	2301	47	5177
Added	0	0	0	0	0	0	0	0	0	0	0	0	0
Total	0	0	0	808	0	421	0	1385	215	0	2301	47	5177
#31 I-15 NB Off-Ramp & Murrieta Hot Springs Road													
Base	292	0	60	0	0	0	0	2202	210	0	1546	598	4908
Added	0	0	0	0	0	0	0	0	0	0	0	0	0
Total	292	0	60	0	0	0	0	2202	210	0	1546	598	4908
#32 I-215 SB Off-Ramp & Murrieta Hot Springs Road													
Base	0	0	0	483	0	524	0	1838	53	0	2599	378	5875
Added	0	0	0	0	0	0	0	0	0	0	0	0	0
Total	0	0	0	483	0	524	0	1838	53	0	2599	378	5875
#33 I-215 NB Off-Ramp & Murrieta Hot Springs Road													
Base	343	0	24	0	0	0	0	1583	115	0	2623	663	5351
Added	0	0	0	0	0	0	0	0	0	0	0	0	0
Total	343	0	24	0	0	0	0	1583	115	0	2623	663	5351
#34 Jackson Avenue & Murrieta Hot Springs Road													
Base	68	0	52	0	0	0	0	1217	38	149	2024	0	3548
Added	0	0	0	0	0	0	0	0	0	0	0	0	0
Total	68	0	52	0	0	0	0	1217	38	149	2024	0	3548
#35 Margarita Road & Murrieta Hot Springs Road													
Base	640	60	128	41	17	7	161	750	462	302	1793	71	4432
Added	0	0	0	0	0	0	0	0	0	0	0	0	0
Total	640	60	128	41	17	7	161	750	462	302	1793	71	4432
#36 French Valley Parkway & Murrieta Hot Springs Road													
Base	19	0	829	0	0	0	0	1182	269	805	2004	0	5108
Added	0	0	0	0	0	0	0	0	0	0	0	0	0
Total	19	0	829	0	0	0	0	1182	269	805	2004	0	5108

City of Murrieta General Plan
Future Proposed General Plan
AM Peak Hour

Volume Type	Northbound Left	Thru	Right	Southbound Left	Thru	Right	Eastbound Left	Thru	Right	Westbound Left	Thru	Right	Total Volume
#37 Jefferson Avenue & Guava Street													
Base	22	1363	3	7	1420	306	176	108	89	2	32	10	3538
Added	0	0	0	0	0	0	0	0	0	0	0	0	0
Total	22	1363	3	7	1420	306	176	108	89	2	32	10	3538
#38 Jefferson Avenue & Cherry Street													
Base	0	0	0	0	0	0	0	0	0	0	0	0	0
Added	0	0	0	0	0	0	0	0	0	0	0	0	0
Total	0	0	0	0	0	0	0	0	0	0	0	0	0
#39 Washington Ave & Calle Del Oso Oro/Nutmeg													
Base	262	164	126	88	218	88	64	602	742	151	189	38	2732
Added	0	0	0	0	0	0	0	0	0	0	0	0	0
Total	262	164	126	88	218	88	64	602	742	151	189	38	2732
#40 Clinton Keith Rd & Calle de Oso Oro/Bear Creek Dr													
Base	63	107	268	4	115	192	269	613	172	420	598	19	2840
Added	0	0	0	0	0	0	0	0	0	0	0	0	0
Total	63	107	268	4	115	192	269	613	172	420	598	19	2840
#41 Jefferson Ave & Nutmeg St													
Base	0	0	0	0	0	0	0	0	0	0	0	0	0
Added	0	0	0	0	0	0	0	0	0	0	0	0	0
Total	0	0	0	0	0	0	0	0	0	0	0	0	0
#42 Jefferson Ave & Magnolia St													
Base	0	0	0	0	0	0	0	0	0	0	0	0	0
Added	0	0	0	0	0	0	0	0	0	0	0	0	0
Total	0	0	0	0	0	0	0	0	0	0	0	0	0
#43 Jefferson Ave & Lemon St													
Base	320	733	28	4	2585	166	31	3	334	8	13	6	4231
Added	0	0	0	0	0	0	0	0	0	0	0	0	0
Total	320	733	28	4	2585	166	31	3	334	8	13	6	4231
#44 Jefferson Ave & Kalmia St													
Base	261	957	246	967	1732	170	55	502	349	223	355	556	6373
Added	0	0	0	0	0	0	0	0	0	0	0	0	0
Total	261	957	246	967	1732	170	55	502	349	223	355	556	6373
#45 Jefferson Ave & Juniper St													
Base	471	1298	35	71	2027	173	137	99	188	7	101	22	4629
Added	0	0	0	0	0	0	0	0	0	0	0	0	0
Total	471	1298	35	71	2027	173	137	99	188	7	101	22	4629

City of Murrieta General Plan
Future Proposed General Plan
AM Peak Hour

Volume Type	Northbound Left	Northbound Thru	Northbound Right	Southbound Left	Southbound Thru	Southbound Right	Eastbound Left	Eastbound Thru	Eastbound Right	Westbound Left	Westbound Thru	Westbound Right	Total Volume
#46 Jefferson Ave & Ivy St/Los Alamos Rd													
Base	259	1336	111	327	1823	72	49	95	129	363	121	400	5085
Added	0	0	0	0	0	0	0	0	0	0	0	0	0
Total	259	1336	111	327	1823	72	49	95	129	363	121	400	5085
#47 Madison Ave & Kalmia St													
Base	0	0	0	0	0	0	0	0	0	0	0	0	0
Added	0	0	0	0	0	0	0	0	0	0	0	0	0
Total	0	0	0	0	0	0	0	0	0	0	0	0	0
#48 Madison Ave/I-15 SB Ramps & Kalmia St													
Base	119	0	219	250	51	272	0	1459	245	386	1139	505	4645
Added	0	0	0	0	0	0	0	0	0	0	0	0	0
Total	119	0	219	250	51	272	0	1459	245	386	1139	505	4645
#49 Monroe Ave & Murrieta Hot Springs Rd													
Base	0	0	0	0	0	0	0	0	0	0	0	0	0
Added	0	0	0	0	0	0	0	0	0	0	0	0	0
Total	0	0	0	0	0	0	0	0	0	0	0	0	0
#50 Hancock Ave & Murrieta Hot Springs Rd													
Base	0	0	0	379	0	598	697	1520	0	0	2602	566	6362
Added	0	0	0	0	0	0	0	0	0	0	0	0	0
Total	0	0	0	379	0	598	697	1520	0	0	2602	566	6362
#51 Alta Murrieta Dr & Murrieta Hot Springs Rd													
Base	221	82	19	69	130	313	258	982	282	131	1871	169	4527
Added	0	0	0	0	0	0	0	0	0	0	0	0	0
Total	221	82	19	69	130	313	258	982	282	131	1871	169	4527
#52 Winchester Road - SR-79 & Murrieta Hot Springs Rd													
Base	288	1507	155	161	1461	1426	768	265	95	276	897	83	7382
Added	0	0	0	0	0	0	0	0	0	0	0	0	0
Total	288	1507	155	161	1461	1426	768	265	95	276	897	83	7382
#53 Hancock Ave & Los Alamos Rd													
Base	48	120	221	793	252	93	71	969	72	916	1682	614	5851
Added	0	0	0	0	0	0	0	0	0	0	0	0	0
Total	48	120	221	793	252	93	71	969	72	916	1682	614	5851
#54 I-215 SB Ramps & Los Alamos Rd													
Base	0	0	0	405	0	2037	0	1419	478	220	1506	0	6065
Added	0	0	0	0	0	0	0	0	0	0	0	0	0
Total	0	0	0	405	0	2037	0	1419	478	220	1506	0	6065

City of Murrieta General Plan
Future Proposed General Plan
AM Peak Hour

Volume Type	Northbound Left	Northbound Thru	Northbound Right	Southbound Left	Southbound Thru	Southbound Right	Eastbound Left	Eastbound Thru	Eastbound Right	Westbound Left	Westbound Thru	Westbound Right	Total Volume
#55 I-215 NB Ramps & Los Alamos Rd													
Base	550	0	377	0	0	0	591	1233	0	0	1185	160	4096
Added	0	0	0	0	0	0	0	0	0	0	0	0	0
Total	550	0	377	0	0	0	591	1233	0	0	1185	160	4096
#56 Whitewood Rd & Los Alamos Rd													
Base	83	372	38	26	432	617	823	232	109	48	241	34	3055
Added	0	0	0	0	0	0	0	0	0	0	0	0	0
Total	83	372	38	26	432	617	823	232	109	48	241	34	3055
#57 Whitewood Rd & Murrieta Hot Springs Rd													
Base	50	240	241	260	536	102	32	1001	132	514	2105	166	5379
Added	0	0	0	0	0	0	0	0	0	0	0	0	0
Total	50	240	241	260	536	102	32	1001	132	514	2105	166	5379
#58 Adams Ave & Guava St													
Base	0	0	0	0	0	0	0	0	0	0	0	0	0
Added	0	0	0	0	0	0	0	0	0	0	0	0	0
Total	0	0	0	0	0	0	0	0	0	0	0	0	0
#59 Nutmeg St & Clinton Keith Rd													
Base	67	41	484	425	54	67	50	2123	110	386	1317	156	5280
Added	0	0	0	0	0	0	0	0	0	0	0	0	0
Total	67	41	484	425	54	67	50	2123	110	386	1317	156	5280
#60 Murrieta Oaks Ave-Mitchell Rd & Clinton Keith Rd													
Base	101	241	85	19	69	196	203	2903	312	78	2088	405	6700
Added	0	0	0	0	0	0	0	0	0	0	0	0	0
Total	101	241	85	19	69	196	203	2903	312	78	2088	405	6700
#61 I-215 SB Ramps & Scott Rd													
Base	0	0	0	246	0	104	0	1052	385	0	866	384	3037
Added	0	0	0	0	0	0	0	0	0	0	0	0	0
Total	0	0	0	246	0	104	0	1052	385	0	866	384	3037
#62 I-215 NB Ramps & Scott Rd													
Base	0	15	600	0	0	259	156	1199	0	0	978	329	3536
Added	0	0	0	0	0	0	0	0	0	0	0	0	0
Total	0	15	600	0	0	259	156	1199	0	0	978	329	3536
#102 Leon Road & Scott Road													
Base	104	198	2	101	444	489	353	438	498	14	360	157	3158
Added	0	0	0	0	0	0	0	0	0	0	0	0	0
Total	104	198	2	101	444	489	353	438	498	14	360	157	3158

City of Murrieta General Plan
Future Proposed General Plan
AM Peak Hour

Volume Type	Northbound Left	Northbound Thru	Northbound Right	Southbound Left	Southbound Thru	Southbound Right	Eastbound Left	Eastbound Thru	Eastbound Right	Westbound Left	Westbound Thru	Westbound Right	Total Volume
#104 Antelope Road & Keller Road													
Base	66	43	328	241	584	447	405	791	1203	758	467	27	5360
Added	0	0	0	0	0	0	0	0	0	0	0	0	0
Total	66	43	328	241	584	447	405	791	1203	758	467	27	5360
#105 Menifee Road - Meadowlark Road & Keller Road													
Base	23	226	251	133	1301	680	495	199	565	299	400	125	4697
Added	0	0	0	0	0	0	0	0	0	0	0	0	0
Total	23	226	251	133	1301	680	495	199	565	299	400	125	4697
#107 Leon Road & Keller Road													
Base	111	330	18	4	868	156	2	60	106	7	65	5	1732
Added	0	0	0	0	0	0	0	0	0	0	0	0	0
Total	111	330	18	4	868	156	2	60	106	7	65	5	1732
#108 Winchester Road - SR-79 & Keller Road													
Base	1	1512	25	5	2774	3	1	10	1	13	20	50	4415
Added	0	0	0	0	0	0	0	0	0	0	0	0	0
Total	1	1512	25	5	2774	3	1	10	1	13	20	50	4415
#112 Leon Road & Jean Nicholas													
Base	5	183	126	261	649	53	2	145	13	157	22	249	1865
Added	0	0	0	0	0	0	0	0	0	0	0	0	0
Total	5	183	126	261	649	53	2	145	13	157	22	249	1865
#122 Meadowlark Lane - Whitewood Road & Clinton Keith Road													
Base	133	230	1083	212	134	715	1386	486	82	943	1187	594	7185
Added	0	0	0	0	0	0	0	0	0	0	0	0	0
Total	133	230	1083	212	134	715	1386	486	82	943	1187	594	7185
#138 Jefferson Avenue & Cherry Street													
Base	86	620	196	37	640	22	1	48	6	147	1311	893	4007
Added	0	0	0	0	0	0	0	0	0	0	0	0	0
Total	86	620	196	37	640	22	1	48	6	147	1311	893	4007
#141 Jefferson Ave & Nutmeg St													
Base	181	321	272	96	1887	69	93	223	509	366	171	67	4255
Added	0	0	0	0	0	0	0	0	0	0	0	0	0
Total	181	321	272	96	1887	69	93	223	509	366	171	67	4255
#142 Jefferson Ave & Magnolia St													
Base	81	637	8	8	2543	247	158	1	155	27	3	1	3869
Added	0	0	0	0	0	0	0	0	0	0	0	0	0
Total	81	637	8	8	2543	247	158	1	155	27	3	1	3869

City of Murrieta General Plan
Future Proposed General Plan
AM Peak Hour

Volume Type	Northbound Left	Northbound Thru	Northbound Right	Southbound Left	Southbound Thru	Southbound Right	Eastbound Left	Eastbound Thru	Eastbound Right	Westbound Left	Westbound Thru	Westbound Right	Total Volume
#149 Monroe Ave & Murrieta Hot Springs Rd													
Base	46	73	48	1	47	50	101	1156	34	7	1552	21	3136
Added	0	0	0	0	0	0	0	0	0	0	0	0	0
Total	46	73	48	1	47	50	101	1156	34	7	1552	21	3136
#158 Adams Ave & Guava St													
Base	78	97	21	101	21	40	23	324	46	3	256	108	1118
Added	0	0	0	0	0	0	0	0	0	0	0	0	0
Total	78	97	21	101	21	40	23	324	46	3	256	108	1118

City of Murrieta General Plan
Future Proposed General Plan
AM Peak Hour

Impact Analysis Report
Level Of Service

Intersection	Base LOS	Base Del/ Veh	Base V/ C	Future LOS	Future Del/ Veh	Future V/ C	Change in
# 1 Menifee Road & Scott Road	E	68.3	1.068	E	68.3	1.068	+ 0.000 D/V
# 3 Winchester Road/SR-79 & Scott	F	177.4	1.508	F	177.4	1.508	+ 0.000 D/V
# 6 Briggs Road & Keller Road	B	18.5	0.542	B	18.5	0.542	+ 0.000 D/V
# 9 Antelope Road & Golden City Dr	C	25.2	0.937	C	25.2	0.937	+ 0.000 D/V
# 10 Whitewood Roa - /Meadowlark Ro	F	107.7	1.204	F	107.7	1.204	+ 0.000 D/V
# 11 Briggs Road & Baxter Road - Je	A	8.8	0.194	A	8.8	0.194	+ 0.000 D/V
# 13 Winchester Road - SR-79 & Nich	B	19.7	0.835	B	19.7	0.835	+ 0.000 D/V
# 14 Antelope Road & Linnel Lane Ex	C	22.1	0.575	C	22.1	0.575	+ 0.000 D/V
# 15 Whitewood Road - Meadowlark Ro	C	26.0	0.813	C	26.0	0.813	+ 0.000 D/V
# 16 Leon Road & Max Gillis Road	D	51.9	1.003	D	51.9	1.003	+ 0.000 D/V
# 17 Winchester Road - SR-79 & Max	C	27.1	0.831	C	27.1	0.831	+ 0.000 D/V
# 18 California Oaks Road & Clinton	E	60.7	1.126	E	60.7	1.126	+ 0.000 D/V
# 19 I-215 SB Off-Ramp & Clinton Ke	A	7.9	0.611	A	7.9	0.611	+ 0.000 D/V
# 20 I-215 NB Off Ramp & Clinton Ke	F	124.7	1.307	F	124.7	1.307	+ 0.000 D/V
# 21 Antelope Road & Clinton Keith	A	5.1	0.493	A	5.1	0.493	+ 0.000 D/V
# 23 Liberty Road & Clinton Keith R	A	7.4	0.638	A	7.4	0.638	+ 0.000 D/V
# 24 Leon Road & Clinton Keith Road	C	26.0	0.888	C	26.0	0.888	+ 0.000 D/V
# 25 Winchester Road - SR-79 & Bent	D	38.8	0.976	D	38.8	0.976	+ 0.000 D/V
# 26 Winchester Road - SR-79 & Via	C	24.1	0.889	C	24.1	0.889	+ 0.000 D/V
# 27 Monroe Ave & Los Alamos	C	24.5	0.603	C	24.5	0.603	+ 0.000 D/V
# 28 Jefferson Avenue & Murrieta Ho	F	133.3	1.440	F	133.3	1.440	+ 0.000 D/V
# 29 Madison Avenue & Murrieta Hot	C	26.6	0.678	C	26.6	0.678	+ 0.000 D/V
# 30 I-15 SB Off-Ramp & Murrieta Ho	B	16.1	0.723	B	16.1	0.723	+ 0.000 D/V

Traffix 7.9.0215 (c) 2008 Dowling Assoc. Licensed to MMA, LONG BEACH, CA

City of Murrieta General Plan
Future Proposed General Plan
AM Peak Hour

Intersection	Base LOS	Base Del/ Veh	Base V/ C	Future LOS	Future Del/ Veh	Future V/ C	Change in
# 31 I-15 NB Off-Ramp & Murrieta Ho	A	5.7	0.402	A	5.7	0.402	+ 0.000 D/V
# 32 I-215 SB Off-Ramp & Murrieta H	B	12.5	0.702	B	12.5	0.702	+ 0.000 D/V
# 33 I-215 NB Off-Ramp & Murrieta H	A	5.6	0.604	A	5.6	0.604	+ 0.000 D/V
# 34 Jackson Avenue & Murrieta Hot	A	5.1	0.410	A	5.1	0.410	+ 0.000 D/V
# 35 Margarita Road & Murrieta Hot	C	24.6	0.665	C	24.6	0.665	+ 0.000 D/V
# 36 French Valley Parkway & Murrie	B	12.9	0.744	B	12.9	0.744	+ 0.000 D/V
# 37 Jefferson Avenue & Guava Stree	A	9.4	0.485	A	9.4	0.485	+ 0.000 D/V
# 39 Washington Ave & Calle Del Oso	C	27.6	0.739	C	27.6	0.739	+ 0.000 D/V
# 40 Clinton Keith Rd & Calle de Os	C	23.7	0.944	C	23.7	0.944	+ 0.000 D/V
# 43 Jefferson Ave & Lemon St	C	28.2	0.924	C	28.2	0.924	+ 0.000 D/V
# 44 Jefferson Ave & Kalmia St	E	59.3	1.090	E	59.3	1.090	+ 0.000 D/V
# 45 Jefferson Ave & Juniper St	C	23.4	0.801	C	23.4	0.801	+ 0.000 D/V
# 46 Jefferson Ave & Ivy St/Los Ala	C	26.8	0.705	C	26.8	0.705	+ 0.000 D/V
# 48 Madison Ave/I-15 SB Ramps & Ka	C	29.4	0.569	C	29.4	0.569	+ 0.000 D/V
# 50 Hancock Ave & Murrieta Hot Spr	B	17.6	0.778	B	17.6	0.778	+ 0.000 D/V
# 51 Alta Murrieta Dr & Murrieta Ho	C	23.8	0.601	C	23.8	0.601	+ 0.000 D/V
# 52 Winchester Road - SR-79 & Murr	F	107.8	1.376	F	107.8	1.376	+ 0.000 D/V
# 53 Hancock Ave & Los Alamos Rd	F	84.6	1.161	F	84.6	1.161	+ 0.000 D/V
# 54 I-215 SB Ramps & Los Alamos Rd	E	77.2	1.129	E	77.2	1.129	+ 0.000 D/V
# 55 I-215 NB Ramps & Los Alamos Rd	C	25.5	0.802	C	25.5	0.802	+ 0.000 D/V
# 56 Whitewood Rd & Los Alamos Rd	D	44.4	0.962	D	44.4	0.962	+ 0.000 D/V
# 57 Whitewood Rd & Murrieta Hot Sp	C	28.3	0.795	C	28.3	0.795	+ 0.000 D/V
# 59 Nutmeg St & Clinton Keith Rd	F	96.5	1.194	F	96.5	1.194	+ 0.000 D/V
# 60 Murrieta Oaks Ave-Mitchell Rd	C	20.4	0.862	C	20.4	0.862	+ 0.000 D/V
# 61 I-215 SB Ramps & Scott Rd	A	8.5	0.237	A	8.5	0.237	+ 0.000 D/V

Traffix 7.9.0215 (c) 2008 Dowling Assoc. Licensed to MMA, LONG BEACH, CA

City of Murrieta General Plan
Future Proposed General Plan
AM Peak Hour

Intersection	Base LOS	Base Del/ Veh	Base V/ C	Future LOS	Future Del/ Veh	Future V/ C	Change in
# 62 I-215 NB Ramps & Scott Rd	B	15.9	0.376	B	15.9	0.376	+ 0.000 D/V
#102 Leon Road & Scott Road	C	27.9	0.673	C	27.9	0.673	+ 0.000 D/V
#104 Antelope Road & Keller Road	F	158.6	1.501	F	158.6	1.501	+ 0.000 D/V
#105 Menifee Road - Meadowlark Road	E	68.8	1.109	E	68.8	1.109	+ 0.000 D/V
#107 Leon Road & Keller Road	B	12.3	0.389	B	12.3	0.389	+ 0.000 D/V
#108 Winchester Road - SR-79 & Kell	A	1.6	0.567	A	1.6	0.567	+ 0.000 D/V
#112 Leon Road & Jean Nicholas	C	22.1	0.397	C	22.1	0.397	+ 0.000 D/V
#122 Meadowlark Lane - Whitewood Ro	F	145.9	1.495	F	145.9	1.495	+ 0.000 D/V
#138 Jefferson Avenue & Cherry Stre	C	21.8	0.783	C	21.8	0.783	+ 0.000 D/V
#141 Jefferson Ave & Nutmeg St	D	51.1	0.997	D	51.1	0.997	+ 0.000 D/V
#142 Jefferson Ave & Magnolia St	B	10.7	0.701	B	10.7	0.701	+ 0.000 D/V
#149 Monroe Ave & Murrieta Hot Spri	A	8.0	0.322	A	8.0	0.322	+ 0.000 D/V
#158 Adams Ave & Guava St	B	12.2	0.287	B	12.2	0.287	+ 0.000 D/V

City of Murrieta General Plan
Future Proposed General Plan
AM Peak Hour

Level Of Service Computation Report
2000 HCM Operations Method (Future Volume Alternative)

Intersection #1 Menifee Road & Scott Road

Cycle (sec): 100 Critical Vol./Cap.(X): 1.068
Loss Time (sec): 0 (Y+R=4.0 sec) Average Delay (sec/veh): 68.3
Optimal Cycle: 180 Level Of Service: E

Street Name:	Menifee Rd						Scott Rd					
Approach:	North Bound			South Bound			East Bound			West Bound		
Movement:	L -	T -	R	L -	T -	R	L -	T -	R	L -	T -	R
Control:	Protected			Protected			Protected			Protected		
Rights:	Include			Include			Include			Include		
Min. Green:	0	0	0	0	0	0	0	0	0	0	0	0
Lanes:	1 0	1	1 0	1 0	1	1 0	1 0	2	1 0	1 0	2	1 0
Volume Module:												
Base Vol:	238	358	374	253	845	93	102	510	316	864	479	251
Growth Adj:	1.00	1.00	1.00	1.00	1.00	1.00	1.00	1.00	1.00	1.00	1.00	1.00
Initial Bse:	238	358	374	253	845	93	102	510	316	864	479	251
Added Vol:	0	0	0	0	0	0	0	0	0	0	0	0
PasserByVol:	0	0	0	0	0	0	0	0	0	0	0	0
Initial Fut:	238	358	374	253	845	93	102	510	316	864	479	251
User Adj:	1.00	1.00	1.00	1.00	1.00	1.00	1.00	1.00	1.00	1.00	1.00	1.00
PHF Adj:	1.00	1.00	1.00	1.00	1.00	1.00	1.00	1.00	1.00	1.00	1.00	1.00
PHF Volume:	238	358	374	253	845	93	102	510	316	864	479	251
Reduct Vol:	0	0	0	0	0	0	0	0	0	0	0	0
Reduced Vol:	238	358	374	253	845	93	102	510	316	864	479	251
PCE Adj:	1.00	1.00	1.00	1.00	1.00	1.00	1.00	1.00	1.00	1.00	1.00	1.00
MLF Adj:	1.00	1.00	1.00	1.00	1.00	1.00	1.00	1.00	1.00	1.00	1.00	1.00
FinalVolume:	238	358	374	253	845	93	102	510	316	864	479	251
Saturation Flow Module:												
Sat/Lane:	1900	1900	1900	1900	1900	1900	1900	1900	1900	1900	1900	1900
Adjustment:	0.95	0.88	0.88	0.95	0.94	0.94	0.95	0.86	0.86	0.95	0.86	0.86
Lanes:	1.00	1.00	1.00	1.00	1.80	0.20	1.00	2.00	1.00	1.00	2.00	1.00
Final Sat.:	1805	1666	1666	1805	3203	353	1805	3261	1630	1805	3278	1639
Capacity Analysis Module:												
Vol/Sat:	0.13	0.21	0.22	0.14	0.26	0.26	0.06	0.16	0.19	0.48	0.15	0.15
Crit Moves:	****				****				****	****		
Green/Cycle:	0.12	0.23	0.23	0.14	0.25	0.25	0.17	0.18	0.18	0.45	0.46	0.46
Volume/Cap:	1.07	0.94	0.98	0.98	1.07	1.07	0.33	0.86	1.07	1.07	0.32	0.33
Delay/Veh:	123.3	57.5	67.5	94.4	87.9	87.9	37.2	47.8	93.1	79.0	17.2	17.3
User DelAdj:	1.00	1.00	1.00	1.00	1.00	1.00	1.00	1.00	1.00	1.00	1.00	1.00
AdjDel/Veh:	123.3	57.5	67.5	94.4	87.9	87.9	37.2	47.8	93.1	79.0	17.2	17.3
LOS by Move:	F	E	E	F	F	F	D	D	F	E	B	B
HCM2kAvgQ:	13	16	18	12	24	24	3	11	18	38	5	5

Note: Queue reported is the number of cars per lane.

City of Murrieta General Plan
Future Proposed General Plan
AM Peak Hour

Level Of Service Computation Report
2000 HCM Operations Method (Future Volume Alternative)

Intersection #3 Winchester Road/SR-79 & Scott Road

Cycle (sec): 100 Critical Vol./Cap.(X): 1.508
Loss Time (sec): 0 (Y+R=4.0 sec) Average Delay (sec/veh): 177.4
Optimal Cycle: 180 Level Of Service: F

Street Name:	Winchester Road/SR-79						Scott Road					
Approach:	North Bound			South Bound			East Bound			West Bound		
Movement:	L - T - R			L - T - R			L - T - R			L - T - R		
Control:	Protected			Protected			Protected			Protected		
Rights:	Include			Include			Include			Include		
Min. Green:	0	0	0	0	0	0	0	0	0	0	0	0
Lanes:	1 0	2 1	0	1 0	2 1	0	1 0	2 1	0	1 0	2 1	0
Volume Module:												
Base Vol:	110	1376	51	951	2658	75	117	178	68	17	151	963
Growth Adj:	1.00	1.00	1.00	1.00	1.00	1.00	1.00	1.00	1.00	1.00	1.00	1.00
Initial Bse:	110	1376	51	951	2658	75	117	178	68	17	151	963
Added Vol:	0	0	0	0	0	0	0	0	0	0	0	0
PasserByVol:	0	0	0	0	0	0	0	0	0	0	0	0
Initial Fut:	110	1376	51	951	2658	75	117	178	68	17	151	963
User Adj:	1.00	1.00	1.00	1.00	1.00	1.00	1.00	1.00	1.00	1.00	1.00	1.00
PHF Adj:	1.00	1.00	1.00	1.00	1.00	1.00	1.00	1.00	1.00	1.00	1.00	1.00
PHF Volume:	110	1376	51	951	2658	75	117	178	68	17	151	963
Reduct Vol:	0	0	0	0	0	0	0	0	0	0	0	0
Reduced Vol:	110	1376	51	951	2658	75	117	178	68	17	151	963
PCE Adj:	1.00	1.00	1.00	1.00	1.00	1.00	1.00	1.00	1.00	1.00	1.00	1.00
MLF Adj:	1.00	1.00	1.00	1.00	1.00	1.00	1.00	1.00	1.00	1.00	1.00	1.00
FinalVolume:	110	1376	51	951	2658	75	117	178	68	17	151	963
Saturation Flow Module:												
Sat/Lane:	1900	1900	1900	1900	1900	1900	1900	1900	1900	1900	1900	1900
Adjustment:	0.95	0.91	0.91	0.95	0.91	0.91	0.95	0.87	0.87	0.95	0.79	0.79
Lanes:	1.00	2.89	0.11	1.00	2.92	0.08	1.00	2.17	0.83	1.00	2.00	1.00
Final Sat.:	1805	4977	184	1805	5024	142	1805	3599	1375	1805	3008	1504
Capacity Analysis Module:												
Vol/Sat:	0.06	0.28	0.28	0.53	0.53	0.53	0.06	0.05	0.05	0.01	0.05	0.64
Crit Moves:		****		****			****					****
Green/Cycle:	0.06	0.18	0.18	0.35	0.48	0.48	0.04	0.39	0.39	0.07	0.42	0.42
Volume/Cap:	1.11	1.51	1.51	1.51	1.11	1.11	1.51	0.13	0.13	0.13	0.12	1.51
Delay/Veh:	169.6	275	275.1	269.5	81.2	81.2	332.0	19.4	19.4	43.6	17.4	264.6
User DelAdj:	1.00	1.00	1.00	1.00	1.00	1.00	1.00	1.00	1.00	1.00	1.00	1.00
AdjDel/Veh:	169.6	275	275.1	269.5	81.2	81.2	332.0	19.4	19.4	43.6	17.4	264.6
LOS by Move:	F	F	F	F	F	F	F	B	B	D	B	F
HCM2kAvgQ:	7	39	39	69	47	47	10	2	2	1	2	77

Note: Queue reported is the number of cars per lane.

City of Murrieta General Plan
Future Proposed General Plan
AM Peak Hour

Level Of Service Computation Report
2000 HCM Operations Method (Future Volume Alternative)

Intersection #6 Briggs Road & Keller Road

Cycle (sec): 100 Critical Vol./Cap.(X): 0.542
Loss Time (sec): 0 (Y+R=4.0 sec) Average Delay (sec/veh): 18.5
Optimal Cycle: 50 Level Of Service: B

Street Name:	Briggs Road						Keller Road					
Approach:	North Bound			South Bound			East Bound			West Bound		
Movement:	L - T - R			L - T - R			L - T - R			L - T - R		
Control:	Protected			Protected			Protected			Protected		
Rights:	Include			Include			Include			Include		
Min. Green:	0	0	0	0	0	0	0	0	0	0	0	0
Lanes:	1 0	1 1	0	1 0	1 1	0	1 0	1 1	0	1 0	1 1	0
Volume Module:												
Base Vol:	346	17	53	0	40	47	1	72	492	15	344	1
Growth Adj:	1.00	1.00	1.00	1.00	1.00	1.00	1.00	1.00	1.00	1.00	1.00	1.00
Initial Bse:	346	17	53	0	40	47	1	72	492	15	344	1
Added Vol:	0	0	0	0	0	0	0	0	0	0	0	0
PasserByVol:	0	0	0	0	0	0	0	0	0	0	0	0
Initial Fut:	346	17	53	0	40	47	1	72	492	15	344	1
User Adj:	1.00	1.00	1.00	1.00	1.00	1.00	1.00	1.00	1.00	1.00	1.00	1.00
PHF Adj:	1.00	1.00	1.00	1.00	1.00	1.00	1.00	1.00	1.00	1.00	1.00	1.00
PHF Volume:	346	17	53	0	40	47	1	72	492	15	344	1
Reduct Vol:	0	0	0	0	0	0	0	0	0	0	0	0
Reduced Vol:	346	17	53	0	40	47	1	72	492	15	344	1
PCE Adj:	1.00	1.00	1.00	1.00	1.00	1.00	1.00	1.00	1.00	1.00	1.00	1.00
MLF Adj:	1.00	1.00	1.00	1.00	1.00	1.00	1.00	1.00	1.00	1.00	1.00	1.00
FinalVolume:	346	17	53	0	40	47	1	72	492	15	344	1
Saturation Flow Module:												
Sat/Lane:	1900	1900	1900	1900	1900	1900	1900	1900	1900	1900	1900	1900
Adjustment:	0.95	0.84	0.84	1.00	0.87	0.87	0.95	0.83	0.83	0.95	0.95	0.95
Lanes:	1.00	1.00	1.00	1.00	1.00	1.00	1.00	1.00	1.00	1.00	1.99	0.01
Final Sat.:	1805	1599	1599	1900	1659	1659	1805	1569	1569	1805	3600	10
Capacity Analysis Module:												
Vol/Sat:	0.19	0.01	0.03	0.00	0.02	0.03	0.00	0.05	0.31	0.01	0.10	0.10
Crit Moves:	****					****			****	****		
Green/Cycle:	0.35	0.41	0.41	0.00	0.05	0.05	0.00	0.58	0.58	0.02	0.59	0.59
Volume/Cap:	0.54	0.03	0.08	0.00	0.46	0.54	0.16	0.08	0.54	0.54	0.16	0.16
Delay/Veh:	26.8	17.8	18.3	0.0	47.8	50.0	61.7	9.3	13.5	69.0	9.3	9.3
User DelAdj:	1.00	1.00	1.00	1.00	1.00	1.00	1.00	1.00	1.00	1.00	1.00	1.00
AdjDel/Veh:	26.8	17.8	18.3	0.0	47.8	50.0	61.7	9.3	13.5	69.0	9.3	9.3
LOS by Move:	C	B	B	A	D	D	E	A	B	E	A	A
HCM2kAvgQ:	9	0	1	0	2	2	0	1	10	1	2	2

Note: Queue reported is the number of cars per lane.

City of Murrieta General Plan
Future Proposed General Plan
AM Peak Hour

Level Of Service Computation Report
2000 HCM Operations Method (Future Volume Alternative)

Intersection #9 Antelope Road & Golden City Drive - Baxter Road

Cycle (sec): 100 Critical Vol./Cap.(X): 0.937
Loss Time (sec): 0 (Y+R=4.0 sec) Average Delay (sec/veh): 25.2
Optimal Cycle: 180 Level Of Service: C

Street Name:	Antelope Road						Golden City Drive - Baxter Road					
Approach:	North Bound			South Bound			East Bound			West Bound		
Movement:	L - T - R			L - T - R			L - T - R			L - T - R		
Control:	Permitted			Permitted			Permitted			Permitted		
Rights:	Include			Include			Include			Include		
Min. Green:	0	0	0	0	0	0	0	0	0	0	0	0
Lanes:	1 0	1 1	0	1 0	1 1	0	1 0	1 1	0	1 0	1 1	0
Volume Module:												
Base Vol:	1	88	515	381	1070	27	1	75	11	397	203	604
Growth Adj:	1.00	1.00	1.00	1.00	1.00	1.00	1.00	1.00	1.00	1.00	1.00	1.00
Initial Bse:	1	88	515	381	1070	27	1	75	11	397	203	604
Added Vol:	0	0	0	0	0	0	0	0	0	0	0	0
PasserByVol:	0	0	0	0	0	0	0	0	0	0	0	0
Initial Fut:	1	88	515	381	1070	27	1	75	11	397	203	604
User Adj:	1.00	1.00	1.00	1.00	1.00	1.00	1.00	1.00	1.00	1.00	1.00	1.00
PHF Adj:	1.00	1.00	1.00	1.00	1.00	1.00	1.00	1.00	1.00	1.00	1.00	1.00
PHF Volume:	1	88	515	381	1070	27	1	75	11	397	203	604
Reduct Vol:	0	0	0	0	0	0	0	0	0	0	0	0
Reduced Vol:	1	88	515	381	1070	27	1	75	11	397	203	604
PCE Adj:	1.00	1.00	1.00	1.00	1.00	1.00	1.00	1.00	1.00	1.00	1.00	1.00
MLF Adj:	1.00	1.00	1.00	1.00	1.00	1.00	1.00	1.00	1.00	1.00	1.00	1.00
FinalVolume:	1	88	515	381	1070	27	1	75	11	397	203	604
Saturation Flow Module:												
Sat/Lane:	1900	1900	1900	1900	1900	1900	1900	1900	1900	1900	1900	1900
Adjustment:	0.18	0.83	0.83	0.36	0.95	0.95	0.19	0.93	0.93	0.67	0.84	0.84
Lanes:	1.00	1.00	1.00	1.00	1.95	0.05	1.00	1.74	0.26	1.00	1.00	1.00
Final Sat.:	336	1574	1574	680	3507	88	352	3088	453	1273	1603	1603
Capacity Analysis Module:												
Vol/Sat:	0.00	0.06	0.33	0.56	0.31	0.31	0.00	0.02	0.02	0.31	0.13	0.38
Crit Moves:				****								****
Green/Cycle:	0.60	0.60	0.60	0.60	0.60	0.60	0.40	0.40	0.40	0.40	0.40	0.40
Volume/Cap:	0.00	0.09	0.55	0.94	0.51	0.51	0.01	0.06	0.06	0.78	0.31	0.94
Delay/Veh:	8.1	8.6	12.6	47.6	11.8	11.8	17.9	18.3	18.3	33.3	20.5	46.0
User DelAdj:	1.00	1.00	1.00	1.00	1.00	1.00	1.00	1.00	1.00	1.00	1.00	1.00
AdjDel/Veh:	8.1	8.6	12.6	47.6	11.8	11.8	17.9	18.3	18.3	33.3	20.5	46.0
LOS by Move:	A	A	B	D	B	B	B	B	B	C	C	D
HCM2kAvgQ:	0	1	10	15	10	10	0	1	1	12	5	24

Note: Queue reported is the number of cars per lane.

City of Murrieta General Plan
Future Proposed General Plan
AM Peak Hour

Level Of Service Computation Report
2000 HCM Operations Method (Future Volume Alternative)

Intersection #10 Whitewood Roa - /Meadowlark Road & Golden City Drive - Baxter R

Cycle (sec): 100 Critical Vol./Cap.(X): 1.204
Loss Time (sec): 0 (Y+R=4.0 sec) Average Delay (sec/veh): 107.7
Optimal Cycle: 180 Level Of Service: F

Street Name:	Whitewood Road - Meadowlark Road						Golden City Drive - Baxter Road					
Approach:	North Bound			South Bound			East Bound			West Bound		
Movement:	L - T - R			L - T - R			L - T - R			L - T - R		
Control:	Protected			Protected			Protected			Protected		
Rights:	Include			Include			Include			Include		
Min. Green:	0	0	0	0	0	0	0	0	0	0	0	0
Lanes:	1 0	1 1	0	1 0	1 1	0	1 0	1 1	0	1 0	1 1	0
Volume Module:												
Base Vol:	316	689	2	0	955	880	59	4	739	1	15	2
Growth Adj:	1.00	1.00	1.00	1.00	1.00	1.00	1.00	1.00	1.00	1.00	1.00	1.00
Initial Bse:	316	689	2	0	955	880	59	4	739	1	15	2
Added Vol:	0	0	0	0	0	0	0	0	0	0	0	0
PasserByVol:	0	0	0	0	0	0	0	0	0	0	0	0
Initial Fut:	316	689	2	0	955	880	59	4	739	1	15	2
User Adj:	1.00	1.00	1.00	1.00	1.00	1.00	1.00	1.00	1.00	1.00	1.00	1.00
PHF Adj:	1.00	1.00	1.00	1.00	1.00	1.00	1.00	1.00	1.00	1.00	1.00	1.00
PHF Volume:	316	689	2	0	955	880	59	4	739	1	15	2
Reduct Vol:	0	0	0	0	0	0	0	0	0	0	0	0
Reduced Vol:	316	689	2	0	955	880	59	4	739	1	15	2
PCE Adj:	1.00	1.00	1.00	1.00	1.00	1.00	1.00	1.00	1.00	1.00	1.00	1.00
MLF Adj:	1.00	1.00	1.00	1.00	1.00	1.00	1.00	1.00	1.00	1.00	1.00	1.00
FinalVolume:	316	689	2	0	955	880	59	4	739	1	15	2
Saturation Flow Module:												
Sat/Lane:	1900	1900	1900	1900	1900	1900	1900	1900	1900	1900	1900	1900
Adjustment:	0.95	0.95	0.95	1.00	0.88	0.88	0.95	0.81	0.81	0.95	0.93	0.93
Lanes:	1.00	1.99	0.01	1.00	1.04	0.96	1.00	1.00	1.00	1.00	1.76	0.24
Final Sat.:	1805	3600	10	1900	1744	1607	1805	1536	1536	1805	3128	417
Capacity Analysis Module:												
Vol/Sat:	0.18	0.19	0.19	0.00	0.55	0.55	0.03	0.00	0.48	0.00	0.00	0.00
Crit Moves:	****				****				****	****		
Green/Cycle:	0.15	0.60	0.60	0.00	0.45	0.45	0.35	0.40	0.40	0.00	0.05	0.05
Volume/Cap:	1.20	0.32	0.32	0.00	1.20	1.20	0.09	0.01	1.20	1.20	0.09	0.09
Delay/Veh:	165.1	10.0	10.0	0.0	126	125.8	22.0	18.1	136.8	1181	45.5	45.5
User DelAdj:	1.00	1.00	1.00	1.00	1.00	1.00	1.00	1.00	1.00	1.00	1.00	1.00
AdjDel/Veh:	165.1	10.0	10.0	0.0	126	125.8	22.0	18.1	136.8	1181	45.5	45.5
LOS by Move:	F	A	A	A	F	F	C	B	F	F	D	D
HCM2kAvgQ:	19	5	5	0	52	52	1	0	43	0	0	0

Note: Queue reported is the number of cars per lane.

City of Murrieta General Plan
Future Proposed General Plan
AM Peak Hour

Level Of Service Computation Report
2000 HCM Operations Method (Future Volume Alternative)

Intersection #11 Briggs Road & Baxter Road - Jean Nicholas

Cycle (sec): 100 Critical Vol./Cap.(X): 0.194
Loss Time (sec): 0 (Y+R=4.0 sec) Average Delay (sec/veh): 8.8
Optimal Cycle: 28 Level Of Service: A

Street Name:	Briggs Road						Baxter Road - Jean Nicholas					
Approach:	North Bound			South Bound			East Bound			West Bound		
Movement:	L -	T -	R	L -	T -	R	L -	T -	R	L -	T -	R
Control:	Protected			Protected			Protected			Protected		
Rights:	Include			Include			Include			Include		
Min. Green:	0	0	0	0	0	0	0	0	0	0	0	0
Lanes:	0 0	1 1	0	1 0	2 0	0	0 0	0 0	0	1 0	0 0	1
Volume Module:												
Base Vol:	0	206	43	38	534	0	0	0	0	9	0	75
Growth Adj:	1.00	1.00	1.00	1.00	1.00	1.00	1.00	1.00	1.00	1.00	1.00	1.00
Initial Bse:	0	206	43	38	534	0	0	0	0	9	0	75
Added Vol:	0	0	0	0	0	0	0	0	0	0	0	0
PasserByVol:	0	0	0	0	0	0	0	0	0	0	0	0
Initial Fut:	0	206	43	38	534	0	0	0	0	9	0	75
User Adj:	1.00	1.00	1.00	1.00	1.00	1.00	1.00	1.00	1.00	1.00	1.00	1.00
PHF Adj:	1.00	1.00	1.00	1.00	1.00	1.00	1.00	1.00	1.00	1.00	1.00	1.00
PHF Volume:	0	206	43	38	534	0	0	0	0	9	0	75
Reduct Vol:	0	0	0	0	0	0	0	0	0	0	0	0
Reduced Vol:	0	206	43	38	534	0	0	0	0	9	0	75
PCE Adj:	1.00	1.00	1.00	1.00	1.00	1.00	1.00	1.00	1.00	1.00	1.00	1.00
MLF Adj:	1.00	1.00	1.00	1.00	1.00	1.00	1.00	1.00	1.00	1.00	1.00	1.00
FinalVolume:	0	206	43	38	534	0	0	0	0	9	0	75
Saturation Flow Module:												
Sat/Lane:	1900	1900	1900	1900	1900	1900	1900	1900	1900	1900	1900	1900
Adjustment:	1.00	0.93	0.93	0.95	0.95	1.00	1.00	1.00	1.00	0.95	1.00	0.85
Lanes:	0.00	1.65	0.35	1.00	2.00	0.00	0.00	0.00	0.00	1.00	0.00	1.00
Final Sat.:	0	2909	607	1805	3610	0	0	0	0	1805	0	1615
Capacity Analysis Module:												
Vol/Sat:	0.00	0.07	0.07	0.02	0.15	0.00	0.00	0.00	0.00	0.00	0.00	0.05
Crit Moves:	****				****							****
Green/Cycle:	0.00	0.59	0.59	0.17	0.76	0.00	0.00	0.00	0.00	0.24	0.00	0.24
Volume/Cap:	0.00	0.12	0.12	0.12	0.19	0.00	0.00	0.00	0.00	0.02	0.00	0.19
Delay/Veh:	0.0	9.2	9.2	35.0	3.4	0.0	0.0	0.0	0.0	29.1	0.0	30.6
User DelAdj:	1.00	1.00	1.00	1.00	1.00	1.00	1.00	1.00	1.00	1.00	1.00	1.00
AdjDel/Veh:	0.0	9.2	9.2	35.0	3.4	0.0	0.0	0.0	0.0	29.1	0.0	30.6
LOS by Move:	A	A	A	C	A	A	A	A	A	C	A	C
HCM2kAvgQ:	0	2	2	1	2	0	0	0	0	0	0	2

Note: Queue reported is the number of cars per lane.

City of Murrieta General Plan
Future Proposed General Plan
AM Peak Hour

Level Of Service Computation Report
2000 HCM Operations Method (Future Volume Alternative)

Intersection #13 Winchester Road - SR-79 & Nicholas - Skyview

Cycle (sec): 100 Critical Vol./Cap.(X): 0.835
Loss Time (sec): 0 (Y+R=4.0 sec) Average Delay (sec/veh): 19.7
Optimal Cycle: 138 Level Of Service: B

Street Name:	Winchester Road - SR-79						Nicholas - Skyview					
Approach:	North Bound			South Bound			East Bound			West Bound		
Movement:	L -	T -	R	L -	T -	R	L -	T -	R	L -	T -	R
Control:	Protected			Protected			Protected			Protected		
Rights:	Include			Include			Include			Include		
Min. Green:	0	0	0	0	0	0	0	0	0	0	0	0
Lanes:	1 0	2 1	0	1 0	2 1	0	1 0	1 1	0	1 0	1 1	0
Volume Module:												
Base Vol:	138	1381	338	22	2896	33	37	330	132	106	327	166
Growth Adj:	1.00	1.00	1.00	1.00	1.00	1.00	1.00	1.00	1.00	1.00	1.00	1.00
Initial Bse:	138	1381	338	22	2896	33	37	330	132	106	327	166
Added Vol:	0	0	0	0	0	0	0	0	0	0	0	0
PasserByVol:	0	0	0	0	0	0	0	0	0	0	0	0
Initial Fut:	138	1381	338	22	2896	33	37	330	132	106	327	166
User Adj:	1.00	1.00	1.00	1.00	1.00	1.00	1.00	1.00	1.00	1.00	1.00	1.00
PHF Adj:	1.00	1.00	1.00	1.00	1.00	1.00	1.00	1.00	1.00	1.00	1.00	1.00
PHF Volume:	138	1381	338	22	2896	33	37	330	132	106	327	166
Reduct Vol:	0	0	0	0	0	0	0	0	0	0	0	0
Reduced Vol:	138	1381	338	22	2896	33	37	330	132	106	327	166
PCE Adj:	1.00	1.00	1.00	1.00	1.00	1.00	1.00	1.00	1.00	1.00	1.00	1.00
MLF Adj:	1.00	1.00	1.00	1.00	1.00	1.00	1.00	1.00	1.00	1.00	1.00	1.00
FinalVolume:	138	1381	338	22	2896	33	37	330	132	106	327	166
Saturation Flow Module:												
Sat/Lane:	1900	1900	1900	1900	1900	1900	1900	1900	1900	1900	1900	1900
Adjustment:	0.95	0.88	0.88	0.95	0.91	0.91	0.95	0.91	0.91	0.95	0.90	0.90
Lanes:	1.00	2.41	0.59	1.00	2.97	0.03	1.00	1.43	0.57	1.00	1.33	0.67
Final Sat.:	1805	4042	989	1805	5118	58	1805	2468	987	1805	2272	1154
Capacity Analysis Module:												
Vol/Sat:	0.08	0.34	0.34	0.01	0.57	0.57	0.02	0.13	0.13	0.06	0.14	0.14
Crit Moves:	****				****			****		****		
Green/Cycle:	0.09	0.74	0.74	0.03	0.68	0.68	0.03	0.16	0.16	0.07	0.20	0.20
Volume/Cap:	0.83	0.46	0.46	0.46	0.83	0.83	0.71	0.83	0.83	0.83	0.71	0.71
Delay/Veh:	73.8	5.1	5.1	54.8	13.8	13.8	85.5	51.3	51.3	81.5	40.7	40.7
User DelAdj:	1.00	1.00	1.00	1.00	1.00	1.00	1.00	1.00	1.00	1.00	1.00	1.00
AdjDel/Veh:	73.8	5.1	5.1	54.8	13.8	13.8	85.5	51.3	51.3	81.5	40.7	40.7
LOS by Move:	E	A	A	D	B	B	F	D	D	F	D	D
HCM2kAvgQ:	7	8	8	1	26	26	2	10	10	5	9	9

Note: Queue reported is the number of cars per lane.

City of Murrieta General Plan
Future Proposed General Plan
AM Peak Hour

Level Of Service Computation Report
2000 HCM Operations Method (Future Volume Alternative)

Intersection #14 Antelope Road & Linnel Lane Extension

Cycle (sec): 100 Critical Vol./Cap.(X): 0.575
Loss Time (sec): 0 (Y+R=4.0 sec) Average Delay (sec/veh): 22.1
Optimal Cycle: 54 Level Of Service: C

Street Name:	Antelope Road						Linnel Lane Extension					
Approach:	North Bound			South Bound			East Bound			West Bound		
Movement:	L -	T -	R	L -	T -	R	L -	T -	R	L -	T -	R
Control:	Protected			Protected			Protected			Protected		
Rights:	Include			Include			Include			Include		
Min. Green:	0	0	0	0	0	0	0	0	0	0	0	0
Lanes:	1 0	1	1 0	1 0	1	1 0	1 0	1	1 0	1 0	1	1 0
Volume Module:												
Base Vol:	21	757	96	99	487	530	199	507	125	6	120	220
Growth Adj:	1.00	1.00	1.00	1.00	1.00	1.00	1.00	1.00	1.00	1.00	1.00	1.00
Initial Bse:	21	757	96	99	487	530	199	507	125	6	120	220
Added Vol:	0	0	0	0	0	0	0	0	0	0	0	0
PasserByVol:	0	0	0	0	0	0	0	0	0	0	0	0
Initial Fut:	21	757	96	99	487	530	199	507	125	6	120	220
User Adj:	1.00	1.00	1.00	1.00	1.00	1.00	1.00	1.00	1.00	1.00	1.00	1.00
PHF Adj:	1.00	1.00	1.00	1.00	1.00	1.00	1.00	1.00	1.00	1.00	1.00	1.00
PHF Volume:	21	757	96	99	487	530	199	507	125	6	120	220
Reduct Vol:	0	0	0	0	0	0	0	0	0	0	0	0
Reduced Vol:	21	757	96	99	487	530	199	507	125	6	120	220
PCE Adj:	1.00	1.00	1.00	1.00	1.00	1.00	1.00	1.00	1.00	1.00	1.00	1.00
MLF Adj:	1.00	1.00	1.00	1.00	1.00	1.00	1.00	1.00	1.00	1.00	1.00	1.00
FinalVolume:	21	757	96	99	487	530	199	507	125	6	120	220
Saturation Flow Module:												
Sat/Lane:	1900	1900	1900	1900	1900	1900	1900	1900	1900	1900	1900	1900
Adjustment:	0.95	0.93	0.93	0.95	0.88	0.88	0.95	0.92	0.92	0.95	0.86	0.86
Lanes:	1.00	1.77	0.23	1.00	1.00	1.00	1.00	1.60	0.40	1.00	1.00	1.00
Final Sat.:	1805	3149	399	1805	1664	1664	1805	2809	693	1805	1630	1630
Capacity Analysis Module:												
Vol/Sat:	0.01	0.24	0.24	0.05	0.29	0.32	0.11	0.18	0.18	0.00	0.07	0.13
Crit Moves:	****					****	****					****
Green/Cycle:	0.02	0.47	0.47	0.11	0.55	0.55	0.19	0.42	0.42	0.01	0.23	0.23
Volume/Cap:	0.58	0.51	0.51	0.51	0.53	0.58	0.58	0.43	0.43	0.43	0.31	0.58
Delay/Veh:	69.1	19.0	19.0	44.6	14.4	15.1	39.1	20.8	20.8	69.4	31.8	35.3
User DelAdj:	1.00	1.00	1.00	1.00	1.00	1.00	1.00	1.00	1.00	1.00	1.00	1.00
AdjDel/Veh:	69.1	19.0	19.0	44.6	14.4	15.1	39.1	20.8	20.8	69.4	31.8	35.3
LOS by Move:	E	B	B	D	B	B	D	C	C	E	C	D
HCM2kAvgQ:	1	10	10	4	10	11	6	7	7	1	3	7

Note: Queue reported is the number of cars per lane.

City of Murrieta General Plan
Future Proposed General Plan
AM Peak Hour

Level Of Service Computation Report
2000 HCM Operations Method (Future Volume Alternative)

Intersection #15 Whitewood Road - Meadowlark Road & Linnel Lane Extension

Cycle (sec): 100 Critical Vol./Cap.(X): 0.813
Loss Time (sec): 0 (Y+R=4.0 sec) Average Delay (sec/veh): 26.0
Optimal Cycle: 122 Level Of Service: C

Street Name:	Whitewood Road - Meadowlark Road						Linnel Lane Extension (Future)					
Approach:	North Bound			South Bound			East Bound			West Bound		
Movement:	L -	T -	R	L -	T -	R	L -	T -	R	L -	T -	R
Control:	Protected			Protected			Protected			Protected		
Rights:	Include			Include			Include			Include		
Min. Green:	0	0	0	0	0	0	0	0	0	0	0	0
Lanes:	1 0	1	1 0	1 0	1	1 0	1 0	1	1 0	1 0	1	1 0
Volume Module:												
Base Vol:	18	797	678	281	1152	183	33	556	114	45	144	324
Growth Adj:	1.00	1.00	1.00	1.00	1.00	1.00	1.00	1.00	1.00	1.00	1.00	1.00
Initial Bse:	18	797	678	281	1152	183	33	556	114	45	144	324
Added Vol:	0	0	0	0	0	0	0	0	0	0	0	0
PasserByVol:	0	0	0	0	0	0	0	0	0	0	0	0
Initial Fut:	18	797	678	281	1152	183	33	556	114	45	144	324
User Adj:	1.00	1.00	1.00	1.00	1.00	1.00	1.00	1.00	1.00	1.00	1.00	1.00
PHF Adj:	1.00	1.00	1.00	1.00	1.00	1.00	1.00	1.00	1.00	1.00	1.00	1.00
PHF Volume:	18	797	678	281	1152	183	33	556	114	45	144	324
Reduct Vol:	0	0	0	0	0	0	0	0	0	0	0	0
Reduced Vol:	18	797	678	281	1152	183	33	556	114	45	144	324
PCE Adj:	1.00	1.00	1.00	1.00	1.00	1.00	1.00	1.00	1.00	1.00	1.00	1.00
MLF Adj:	1.00	1.00	1.00	1.00	1.00	1.00	1.00	1.00	1.00	1.00	1.00	1.00
FinalVolume:	18	797	678	281	1152	183	33	556	114	45	144	324
Saturation Flow Module:												
Sat/Lane:	1900	1900	1900	1900	1900	1900	1900	1900	1900	1900	1900	1900
Adjustment:	0.95	0.88	0.88	0.95	0.93	0.93	0.95	0.93	0.93	0.95	0.85	0.85
Lanes:	1.00	1.08	0.92	1.00	1.73	0.27	1.00	1.66	0.34	1.00	1.00	1.00
Final Sat.:	1805	1816	1545	1805	3050	484	1805	2921	599	1805	1617	1617
Capacity Analysis Module:												
Vol/Sat:	0.01	0.44	0.44	0.16	0.38	0.38	0.02	0.19	0.19	0.02	0.09	0.20
Crit Moves:		****		****			****					****
Green/Cycle:	0.02	0.54	0.54	0.19	0.71	0.71	0.02	0.24	0.24	0.03	0.25	0.25
Volume/Cap:	0.53	0.81	0.81	0.81	0.53	0.53	0.81	0.80	0.80	0.80	0.36	0.81
Delay/Veh:	63.6	21.8	21.8	52.4	6.9	6.9	121.3	41.4	41.4	102.7	31.3	44.2
User DelAdj:	1.00	1.00	1.00	1.00	1.00	1.00	1.00	1.00	1.00	1.00	1.00	1.00
AdjDel/Veh:	63.6	21.8	21.8	52.4	6.9	6.9	121.3	41.4	41.4	102.7	31.3	44.2
LOS by Move:	E	C	C	D	A	A	F	D	D	F	C	D
HCM2kAvgQ:	1	21	21	11	10	10	3	12	12	3	4	12

Note: Queue reported is the number of cars per lane.

City of Murrieta General Plan
Future Proposed General Plan
AM Peak Hour

Level Of Service Computation Report
2000 HCM Operations Method (Future Volume Alternative)

Intersection #16 Leon Road & Max Gillis Road

Cycle (sec): 100 Critical Vol./Cap.(X): 1.003
Loss Time (sec): 0 (Y+R=4.0 sec) Average Delay (sec/veh): 51.9
Optimal Cycle: 180 Level Of Service: D

Street Name:	Leon Road						Max Gillis Road					
Approach:	North Bound			South Bound			East Bound			West Bound		
Movement:	L	T	R	L	T	R	L	T	R	L	T	R
Control:	Protected			Protected			Protected			Protected		
Rights:	Include			Include			Include			Include		
Min. Green:	0	0	0	0	0	0	0	0	0	0	0	0
Lanes:	2	0 2	0 1	2	0 1	1 0	2	0 1	1 0	2	0 1	0 1
Volume Module:												
Base Vol:	417	107	396	383	363	152	100	470	767	631	322	182
Growth Adj:	1.00	1.00	1.00	1.00	1.00	1.00	1.00	1.00	1.00	1.00	1.00	1.00
Initial Bse:	417	107	396	383	363	152	100	470	767	631	322	182
Added Vol:	0	0	0	0	0	0	0	0	0	0	0	0
PasserByVol:	0	0	0	0	0	0	0	0	0	0	0	0
Initial Fut:	417	107	396	383	363	152	100	470	767	631	322	182
User Adj:	1.00	1.00	1.00	1.00	1.00	1.00	1.00	1.00	1.00	1.00	1.00	1.00
PHF Adj:	1.00	1.00	1.00	1.00	1.00	1.00	1.00	1.00	1.00	1.00	1.00	1.00
PHF Volume:	417	107	396	383	363	152	100	470	767	631	322	182
Reduct Vol:	0	0	0	0	0	0	0	0	0	0	0	0
Reduced Vol:	417	107	396	383	363	152	100	470	767	631	322	182
PCE Adj:	1.00	1.00	1.00	1.00	1.00	1.00	1.00	1.00	1.00	1.00	1.00	1.00
MLF Adj:	1.00	1.00	1.00	1.00	1.00	1.00	1.00	1.00	1.00	1.00	1.00	1.00
FinalVolume:	417	107	396	383	363	152	100	470	767	631	322	182
Saturation Flow Module:												
Sat/Lane:	1900	1900	1900	1900	1900	1900	1900	1900	1900	1900	1900	1900
Adjustment:	0.92	0.95	0.85	0.92	0.91	0.91	0.92	0.86	0.86	0.92	1.00	0.85
Lanes:	2.00	2.00	1.00	2.00	1.41	0.59	2.00	1.00	1.00	2.00	1.00	1.00
Final Sat.:	3502	3610	1615	3502	2433	1019	3502	1637	1637	3502	1900	1615
Capacity Analysis Module:												
Vol/Sat:	0.12	0.03	0.25	0.11	0.15	0.15	0.03	0.29	0.47	0.18	0.17	0.11
Crit Moves:			****	****					****	****		
Green/Cycle:	0.16	0.24	0.24	0.11	0.20	0.20	0.09	0.47	0.47	0.18	0.55	0.55
Volume/Cap:	0.76	0.12	1.00	1.00	0.76	0.76	0.31	0.61	1.00	1.00	0.31	0.20
Delay/Veh:	46.4	29.5	83.9	91.4	42.9	42.9	42.9	20.5	53.1	77.7	12.2	11.4
User DelAdj:	1.00	1.00	1.00	1.00	1.00	1.00	1.00	1.00	1.00	1.00	1.00	1.00
AdjDel/Veh:	46.4	29.5	83.9	91.4	42.9	42.9	42.9	20.5	53.1	77.7	12.2	11.4
LOS by Move:	D	C	F	F	D	D	D	C	D	E	B	B
HCM2kAvgQ:	8	1	18	10	10	10	2	12	33	15	5	3

Note: Queue reported is the number of cars per lane.

City of Murrieta General Plan
Future Proposed General Plan
AM Peak Hour

Level Of Service Computation Report
2000 HCM Operations Method (Future Volume Alternative)

Intersection #17 Winchester Road - SR-79 & Max Gillis - Thompson

Cycle (sec): 100 Critical Vol./Cap.(X): 0.831
Loss Time (sec): 0 (Y+R=4.0 sec) Average Delay (sec/veh): 27.1
Optimal Cycle: 135 Level Of Service: C

Street Name:	Winchester Road - SR-79						Max Gillis - Thompson					
Approach:	North Bound			South Bound			East Bound			West Bound		
Movement:	L	T	R	L	T	R	L	T	R	L	T	R
Control:	Protected			Protected			Protected			Protected		
Rights:	Include			Include			Include			Include		
Min. Green:	0	0	0	0	0	0	0	0	0	0	0	0
Lanes:	1	0 2	1 0	1	0 3	0 1	2	0 2	0 1	1	0 1	1 0
Volume Module:												
Base Vol:	200	1300	46	140	2198	729	609	165	279	31	298	39
Growth Adj:	1.00	1.00	1.00	1.00	1.00	1.00	1.00	1.00	1.00	1.00	1.00	1.00
Initial Bse:	200	1300	46	140	2198	729	609	165	279	31	298	39
Added Vol:	0	0	0	0	0	0	0	0	0	0	0	0
PasserByVol:	0	0	0	0	0	0	0	0	0	0	0	0
Initial Fut:	200	1300	46	140	2198	729	609	165	279	31	298	39
User Adj:	1.00	1.00	1.00	1.00	1.00	1.00	1.00	1.00	1.00	1.00	1.00	1.00
PHF Adj:	1.00	1.00	1.00	1.00	1.00	1.00	1.00	1.00	1.00	1.00	1.00	1.00
PHF Volume:	200	1300	46	140	2198	729	609	165	279	31	298	39
Reduct Vol:	0	0	0	0	0	0	0	0	0	0	0	0
Reduced Vol:	200	1300	46	140	2198	729	609	165	279	31	298	39
PCE Adj:	1.00	1.00	1.00	1.00	1.00	1.00	1.00	1.00	1.00	1.00	1.00	1.00
MLF Adj:	1.00	1.00	1.00	1.00	1.00	1.00	1.00	1.00	1.00	1.00	1.00	1.00
FinalVolume:	200	1300	46	140	2198	729	609	165	279	31	298	39
Saturation Flow Module:												
Sat/Lane:	1900	1900	1900	1900	1900	1900	1900	1900	1900	1900	1900	1900
Adjustment:	0.95	0.91	0.91	0.95	0.91	0.85	0.92	0.95	0.85	0.95	0.93	0.93
Lanes:	1.00	2.90	0.10	1.00	3.00	1.00	2.00	2.00	1.00	1.00	1.77	0.23
Final Sat.:	1805	4985	176	1805	5187	1615	3502	3610	1615	1805	3138	411
Capacity Analysis Module:												
Vol/Sat:	0.11	0.26	0.26	0.08	0.42	0.45	0.17	0.05	0.17	0.02	0.09	0.09
Crit Moves:	****					****	****				****	
Green/Cycle:	0.13	0.52	0.52	0.16	0.54	0.54	0.21	0.29	0.29	0.03	0.11	0.11
Volume/Cap:	0.83	0.50	0.50	0.50	0.78	0.83	0.83	0.16	0.59	0.59	0.83	0.83
Delay/Veh:	63.3	15.6	15.6	40.1	19.6	25.8	45.8	26.2	32.0	64.0	56.9	56.9
User DelAdj:	1.00	1.00	1.00	1.00	1.00	1.00	1.00	1.00	1.00	1.00	1.00	1.00
AdjDel/Veh:	63.3	15.6	15.6	40.1	19.6	25.8	45.8	26.2	32.0	64.0	56.9	56.9
LOS by Move:	E	B	B	D	B	C	D	C	C	E	E	E
HCM2kAvgQ:	8	10	10	5	21	21	12	2	8	2	8	8

Note: Queue reported is the number of cars per lane.

City of Murrieta General Plan
Future Proposed General Plan
AM Peak Hour

Level Of Service Computation Report
2000 HCM Operations Method (Future Volume Alternative)

Intersection #18 California Oaks Road & Clinton Keith Road

Cycle (sec): 100 | Critical Vol./Cap.(X): 1.126
Loss Time (sec): 0 (Y+R=4.0 sec) | Average Delay (sec/veh): 60.7
Optimal Cycle: 180 | Level Of Service: E

Street Name:	California Oaks Road						Clinton Keith Road					
Approach:	North Bound			South Bound			East Bound			West Bound		
Movement:	L	T	R	L	T	R	L	T	R	L	T	R
Control:	Protected			Protected			Protected			Protected		
Rights:	Ovl			Include			Include			Include		
Min. Green:	0	0	0	0	0	0	0	0	0	0	0	0
Lanes:	1 0	0 0	2	0 0	0 0	0	0 0	2 1	0	1 0	3 0	0
Volume Module:												
Base Vol:	204	0	669	0	0	0	0	2680	307	773	1675	0
Growth Adj:	1.00	1.00	1.00	1.00	1.00	1.00	1.00	1.00	1.00	1.00	1.00	1.00
Initial Bse:	204	0	669	0	0	0	0	2680	307	773	1675	0
Added Vol:	0	0	0	0	0	0	0	0	0	0	0	0
PasserByVol:	0	0	0	0	0	0	0	0	0	0	0	0
Initial Fut:	204	0	669	0	0	0	0	2680	307	773	1675	0
User Adj:	1.00	1.00	1.00	1.00	1.00	1.00	1.00	1.00	1.00	1.00	1.00	1.00
PHF Adj:	1.00	1.00	1.00	1.00	1.00	1.00	1.00	1.00	1.00	1.00	1.00	1.00
PHF Volume:	204	0	669	0	0	0	0	2680	307	773	1675	0
Reduct Vol:	0	0	0	0	0	0	0	0	0	0	0	0
Reduced Vol:	204	0	669	0	0	0	0	2680	307	773	1675	0
PCE Adj:	1.00	1.00	1.00	1.00	1.00	1.00	1.00	1.00	1.00	1.00	1.00	1.00
MLF Adj:	1.00	1.00	1.00	1.00	1.00	1.00	1.00	1.00	1.00	1.00	1.00	1.00
FinalVolume:	204	0	669	0	0	0	0	2680	307	773	1675	0
Saturation Flow Module:												
Sat/Lane:	1900	1900	1900	1900	1900	1900	1900	1900	1900	1900	1900	1900
Adjustment:	0.95	1.00	0.75	1.00	1.00	1.00	1.00	0.90	0.90	0.95	0.91	1.00
Lanes:	1.00	0.00	2.00	0.00	0.00	0.00	0.00	2.69	0.31	1.00	3.00	0.00
Final Sat.:	1805	0	2842	0	0	0	0	4584	525	1805	5187	0
Capacity Analysis Module:												
Vol/Sat:	0.11	0.00	0.24	0.00	0.00	0.00	0.00	0.58	0.58	0.43	0.32	0.00
Crit Moves:	****							****		****		
Green/Cycle:	0.10	0.00	0.48	0.00	0.00	0.00	0.00	0.52	0.52	0.38	0.90	0.00
Volume/Cap:	1.13	0.00	0.49	0.00	0.00	0.00	0.00	1.13	1.13	1.13	0.36	0.00
Delay/Veh:	149.7	0.0	17.9	0.0	0.0	0.0	0.0	86.2	86.2	105.5	0.8	0.0
User DelAdj:	1.00	1.00	1.00	1.00	1.00	1.00	1.00	1.00	1.00	1.00	1.00	1.00
AdjDel/Veh:	149.7	0.0	17.9	0.0	0.0	0.0	0.0	86.2	86.2	105.5	0.8	0.0
LOS by Move:	F	A	B	A	A	A	A	F	F	F	A	A
HCM2kAvgQ:	12	0	8	0	0	0	0	52	52	38	3	0

Note: Queue reported is the number of cars per lane.

City of Murrieta General Plan
Future Proposed General Plan
AM Peak Hour

Level Of Service Computation Report
2000 HCM Operations Method (Future Volume Alternative)

Intersection #19 I-215 SB Off-Ramp & Clinton Keith Road

Cycle (sec): 100 | Critical Vol./Cap.(X): 0.611
Loss Time (sec): 0 (Y+R=4.0 sec) | Average Delay (sec/veh): 7.9
Optimal Cycle: 59 | Level Of Service: A

Street Name:	I-215 SB Off-Ramp						Clinton Keith Road					
Approach:	North Bound			South Bound			East Bound			West Bound		
Movement:	L	T	R	L	T	R	L	T	R	L	T	R
Control:	Split Phase			Split Phase			Protected			Protected		
Rights:	Include			Include			Include			Ignore		
Min. Green:	0	0	0	0	0	0	0	0	0	0	0	0
Lanes:	0 0	0 0	0	0 1	0 0	2	0 0	3 0	1	0 0	3 0	1
Volume Module:												
Base Vol:	0	0	0	58	0	420	0	2401	496	0	2089	227
Growth Adj:	1.00	1.00	1.00	1.00	1.00	1.00	1.00	1.00	1.00	1.00	1.00	1.00
Initial Bse:	0	0	0	58	0	420	0	2401	496	0	2089	227
Added Vol:	0	0	0	0	0	0	0	0	0	0	0	0
PasserByVol:	0	0	0	0	0	0	0	0	0	0	0	0
Initial Fut:	0	0	0	58	0	420	0	2401	496	0	2089	227
User Adj:	1.00	1.00	1.00	1.00	1.00	1.00	1.00	1.00	1.00	1.00	1.00	0.00
PHF Adj:	1.00	1.00	1.00	1.00	1.00	1.00	1.00	1.00	1.00	1.00	1.00	0.00
PHF Volume:	0	0	0	58	0	420	0	2401	496	0	2089	0
Reduct Vol:	0	0	0	0	0	0	0	0	0	0	0	0
Reduced Vol:	0	0	0	58	0	420	0	2401	496	0	2089	0
PCE Adj:	1.00	1.00	1.00	1.00	1.00	1.00	1.00	1.00	1.00	1.00	1.00	0.00
MLF Adj:	1.00	1.00	1.00	1.00	1.00	1.00	1.00	1.00	1.00	1.00	1.00	0.00
FinalVolume:	0	0	0	58	0	420	0	2401	496	0	2089	0
Saturation Flow Module:												
Sat/Lane:	1900	1900	1900	1900	1900	1900	1900	1900	1900	1900	1900	1900
Adjustment:	1.00	1.00	1.00	0.95	1.00	0.75	1.00	0.91	0.85	1.00	0.91	1.00
Lanes:	0.00	0.00	0.00	1.00	0.00	2.00	0.00	3.00	1.00	0.00	3.00	1.00
Final Sat.:	0	0	0	1809	0	2842	0	5187	1615	0	5187	1900
Capacity Analysis Module:												
Vol/Sat:	0.00	0.00	0.00	0.03	0.00	0.15	0.00	0.46	0.31	0.00	0.40	0.00
Crit Moves:						****		****		****		
Green/Cycle:	0.00	0.00	0.00	0.24	0.00	0.24	0.00	0.76	0.76	0.00	0.76	0.00
Volume/Cap:	0.00	0.00	0.00	0.13	0.00	0.61	0.00	0.61	0.41	0.00	0.53	0.00
Delay/Veh:	0.0	0.0	0.0	29.8	0.0	35.3	0.0	5.7	4.4	0.0	5.0	0.0
User DelAdj:	1.00	1.00	1.00	1.00	1.00	1.00	1.00	1.00	1.00	1.00	1.00	1.00
AdjDel/Veh:	0.0	0.0	0.0	29.8	0.0	35.3	0.0	5.7	4.4	0.0	5.0	0.0
LOS by Move:	A	A	A	C	A	D	A	A	A	A	A	A
HCM2kAvgQ:	0	0	0	1	0	7	0	13	5	0	10	0

Note: Queue reported is the number of cars per lane.

City of Murrieta General Plan
Future Proposed General Plan
AM Peak Hour

Level Of Service Computation Report
2000 HCM Operations Method (Future Volume Alternative)

Intersection #20 I-215 NB Off Ramp & Clinton Keith Road

Cycle (sec): 100 Critical Vol./Cap.(X): 1.307
Loss Time (sec): 0 (Y+R=4.0 sec) Average Delay (sec/veh): 124.7
Optimal Cycle: 180 Level Of Service: F

Street Name:	I-215 NB Off Ramp						Clinton Keith Road					
Approach:	North Bound			South Bound			East Bound			West Bound		
Movement:	L	T	R	L	T	R	L	T	R	L	T	R
Control:	Split Phase			Split Phase			Protected			Protected		
Rights:	Include			Include			Include			Ignore		
Min. Green:	0	0	0	0	0	0	0	0	0	0	0	0
Lanes:	1 0	0 0	1	0 0	0 0	0	0 0	3 0	1	0 0	3 0	1
Volume Module:												
Base Vol:	162	0	1393	0	0	0	0	1797	334	0	2305	233
Growth Adj:	1.00	1.00	1.00	1.00	1.00	1.00	1.00	1.00	1.00	1.00	1.00	1.00
Initial Bse:	162	0	1393	0	0	0	0	1797	334	0	2305	233
Added Vol:	0	0	0	0	0	0	0	0	0	0	0	0
PasserByVol:	0	0	0	0	0	0	0	0	0	0	0	0
Initial Fut:	162	0	1393	0	0	0	0	1797	334	0	2305	233
User Adj:	1.00	1.00	1.00	1.00	1.00	1.00	1.00	1.00	1.00	1.00	1.00	0.00
PHF Adj:	1.00	1.00	1.00	1.00	1.00	1.00	1.00	1.00	1.00	1.00	1.00	0.00
PHF Volume:	162	0	1393	0	0	0	0	1797	334	0	2305	0
Reduct Vol:	0	0	0	0	0	0	0	0	0	0	0	0
Reduced Vol:	162	0	1393	0	0	0	0	1797	334	0	2305	0
PCE Adj:	1.00	1.00	1.00	1.00	1.00	1.00	1.00	1.00	1.00	1.00	1.00	0.00
MLF Adj:	1.00	1.00	1.00	1.00	1.00	1.00	1.00	1.00	1.00	1.00	1.00	0.00
FinalVolume:	162	0	1393	0	0	0	0	1797	334	0	2305	0
Saturation Flow Module:												
Sat/Lane:	1900	1900	1900	1900	1900	1900	1900	1900	1900	1900	1900	1900
Adjustment:	0.95	1.00	0.85	1.00	1.00	1.00	1.00	0.91	0.85	1.00	0.91	1.00
Lanes:	1.00	0.00	1.00	0.00	0.00	0.00	0.00	3.00	1.00	0.00	3.00	1.00
Final Sat.:	1805	0	1615	0	0	0	0	5187	1615	0	5187	1900
Capacity Analysis Module:												
Vol/Sat:	0.09	0.00	0.86	0.00	0.00	0.00	0.00	0.35	0.21	0.00	0.44	0.00
Crit Moves:			****				****				****	
Green/Cycle:	0.66	0.00	0.66	0.00	0.00	0.00	0.00	0.34	0.34	0.00	0.34	0.00
Volume/Cap:	0.14	0.00	1.31	0.00	0.00	0.00	0.00	1.02	0.61	0.00	1.31	0.00
Delay/Veh:	6.4	0.0	162.0	0.0	0.0	0.0	0.0	59.3	29.4	0.0	175	0.0
User DelAdj:	1.00	1.00	1.00	1.00	1.00	1.00	1.00	1.00	1.00	1.00	1.00	1.00
AdjDel/Veh:	6.4	0.0	162.0	0.0	0.0	0.0	0.0	59.3	29.4	0.0	175	0.0
LOS by Move:	A	A	F	A	A	A	A	E	C	A	F	A
HCM2kAvgQ:	2	0	83	0	0	0	0	28	9	0	52	0

Note: Queue reported is the number of cars per lane.

City of Murrieta General Plan
Future Proposed General Plan
AM Peak Hour

Level Of Service Computation Report
2000 HCM Operations Method (Future Volume Alternative)

Intersection #21 Antelope Road & Clinton Keith Road

Cycle (sec): 100 Critical Vol./Cap.(X): 0.493
Loss Time (sec): 0 (Y+R=4.0 sec) Average Delay (sec/veh): 5.1
Optimal Cycle: 45 Level Of Service: A

Street Name:	Antelope Road						Clinton Keith Road					
Approach:	North Bound			South Bound			East Bound			West Bound		
Movement:	L	T	R	L	T	R	L	T	R	L	T	R
Control:	Protected			Protected			Protected			Protected		
Rights:	Include			Ignore			Include			Include		
Min. Green:	0	0	0	0	0	0	0	0	0	0	0	0
Lanes:	0 0	0 0	0	2 0	0 0	2	2 0	3 0	0	0 0	2 1	0
Volume Module:												
Base Vol:	0	0	0	15	0	426	388	1869	0	0	1643	296
Growth Adj:	1.00	1.00	1.00	1.00	1.00	1.00	1.00	1.00	1.00	1.00	1.00	1.00
Initial Bse:	0	0	0	15	0	426	388	1869	0	0	1643	296
Added Vol:	0	0	0	0	0	0	0	0	0	0	0	0
PasserByVol:	0	0	0	0	0	0	0	0	0	0	0	0
Initial Fut:	0	0	0	15	0	426	388	1869	0	0	1643	296
User Adj:	1.00	1.00	1.00	1.00	1.00	0.00	1.00	1.00	1.00	1.00	1.00	1.00
PHF Adj:	1.00	1.00	1.00	1.00	1.00	0.00	1.00	1.00	1.00	1.00	1.00	1.00
PHF Volume:	0	0	0	15	0	0	388	1869	0	0	1643	296
Reduct Vol:	0	0	0	0	0	0	0	0	0	0	0	0
Reduced Vol:	0	0	0	15	0	0	388	1869	0	0	1643	296
PCE Adj:	1.00	1.00	1.00	1.00	1.00	0.00	1.00	1.00	1.00	1.00	1.00	1.00
MLF Adj:	1.00	1.00	1.00	1.00	1.00	0.00	1.00	1.00	1.00	1.00	1.00	1.00
FinalVolume:	0	0	0	15	0	0	388	1869	0	0	1643	296
Saturation Flow Module:												
Sat/Lane:	1900	1900	1900	1900	1900	1900	1900	1900	1900	1900	1900	1900
Adjustment:	1.00	1.00	1.00	0.92	1.00	0.88	0.92	0.91	1.00	1.00	0.89	0.89
Lanes:	0.00	0.00	0.00	2.00	0.00	2.00	2.00	3.00	0.00	0.00	2.54	0.46
Final Sat.:	0	0	0	3502	0	3344	3502	5187	0	0	4294	774
Capacity Analysis Module:												
Vol/Sat:	0.00	0.00	0.00	0.00	0.00	0.00	0.11	0.36	0.00	0.00	0.38	0.38
Crit Moves:					****		****				****	
Green/Cycle:	0.00	0.00	0.00	0.00	0.00	0.00	0.22	1.00	0.00	0.00	0.78	0.78
Volume/Cap:	0.00	0.00	0.00	xxxx	0.00	0.00	0.49	0.36	0.00	0.00	0.49	0.49
Delay/Veh:	0.0	0.0	0.0	0.0	0.0	0.0	34.3	0.0	0.0	0.0	4.2	4.2
User DelAdj:	1.00	1.00	1.00	1.00	1.00	1.00	1.00	1.00	1.00	1.00	1.00	1.00
AdjDel/Veh:	0.0	0.0	0.0	0.0	0.0	0.0	34.3	0.0	0.0	0.0	4.2	4.2
LOS by Move:	A	A	A	A	A	A	C	A	A	A	A	A
HCM2kAvgQ:	0	0	0	0	0	0	6	1	0	0	8	8

Note: Queue reported is the number of cars per lane.

City of Murrieta General Plan
Future Proposed General Plan
AM Peak Hour

Level Of Service Computation Report
2000 HCM Operations Method (Future Volume Alternative)

Intersection #23 Liberty Road & Clinton Keith Road

Cycle (sec): 100 Critical Vol./Cap.(X): 0.638
Loss Time (sec): 0 (Y+R=4.0 sec) Average Delay (sec/veh): 7.4
Optimal Cycle: 63 Level Of Service: A

Street Name:	Liberty Road						Clinton Keith Road					
Approach:	North Bound			South Bound			East Bound			West Bound		
Movement:	L	T	R	L	T	R	L	T	R	L	T	R
Control:	Protected			Protected			Protected			Protected		
Rights:	Include			Include			Include			Include		
Min. Green:	0	0	0	0	0	0	0	0	0	0	0	0
Lanes:	2 0	0	0 1	0 0	0	0 0	0 0	2 1	0	1 0	3 0	0
Volume Module:												
Base Vol:	65	0	217	0	0	0	0	1615	205	44	2610	0
Growth Adj:	1.00	1.00	1.00	1.00	1.00	1.00	1.00	1.00	1.00	1.00	1.00	1.00
Initial Bse:	65	0	217	0	0	0	0	1615	205	44	2610	0
Added Vol:	0	0	0	0	0	0	0	0	0	0	0	0
PasserByVol:	0	0	0	0	0	0	0	0	0	0	0	0
Initial Fut:	65	0	217	0	0	0	0	1615	205	44	2610	0
User Adj:	1.00	1.00	1.00	1.00	1.00	1.00	1.00	1.00	1.00	1.00	1.00	1.00
PHF Adj:	1.00	1.00	1.00	1.00	1.00	1.00	1.00	1.00	1.00	1.00	1.00	1.00
PHF Volume:	65	0	217	0	0	0	0	1615	205	44	2610	0
Reduct Vol:	0	0	0	0	0	0	0	0	0	0	0	0
Reduced Vol:	65	0	217	0	0	0	0	1615	205	44	2610	0
PCE Adj:	1.00	1.00	1.00	1.00	1.00	1.00	1.00	1.00	1.00	1.00	1.00	1.00
MLF Adj:	1.00	1.00	1.00	1.00	1.00	1.00	1.00	1.00	1.00	1.00	1.00	1.00
FinalVolume:	65	0	217	0	0	0	0	1615	205	44	2610	0
Saturation Flow Module:												
Sat/Lane:	1900	1900	1900	1900	1900	1900	1900	1900	1900	1900	1900	1900
Adjustment:	0.92	1.00	0.85	1.00	1.00	1.00	1.00	0.89	0.89	0.95	0.91	1.00
Lanes:	2.00	0.00	1.00	0.00	0.00	0.00	0.00	2.66	0.34	1.00	3.00	0.00
Final Sat.:	3502	0	1615	0	0	0	0	4525	574	1805	5187	0
Capacity Analysis Module:												
Vol/Sat:	0.02	0.00	0.13	0.00	0.00	0.00	0.00	0.36	0.36	0.02	0.50	0.00
Crit Moves:			****				****				****	
Green/Cycle:	0.21	0.00	0.21	0.00	0.00	0.00	0.00	0.74	0.74	0.05	0.79	0.00
Volume/Cap:	0.09	0.00	0.64	0.00	0.00	0.00	0.00	0.48	0.48	0.48	0.64	0.00
Delay/Veh:	31.8	0.0	40.0	0.0	0.0	0.0	0.0	5.4	5.4	50.2	4.8	0.0
User DelAdj:	1.00	1.00	1.00	1.00	1.00	1.00	1.00	1.00	1.00	1.00	1.00	1.00
AdjDel/Veh:	31.8	0.0	40.0	0.0	0.0	0.0	0.0	5.4	5.4	50.2	4.8	0.0
LOS by Move:	C	A	D	A	A	A	A	A	A	D	A	A
HCM2kAvgQ:	1	0	7	0	0	0	0	8	8	2	13	0

Note: Queue reported is the number of cars per lane.

City of Murrieta General Plan
Future Proposed General Plan
AM Peak Hour

Level Of Service Computation Report
2000 HCM Operations Method (Future Volume Alternative)

Intersection #24 Leon Road & Clinton Keith Road

Cycle (sec): 100 Critical Vol./Cap.(X): 0.888
Loss Time (sec): 0 (Y+R=4.0 sec) Average Delay (sec/veh): 26.0
Optimal Cycle: 180 Level Of Service: C

Street Name:	Leon Road						Clinton Keith Road					
Approach:	North Bound			South Bound			East Bound			West Bound		
Movement:	L	T	R	L	T	R	L	T	R	L	T	R
Control:	Protected			Protected			Protected			Protected		
Rights:	Include			Ovl			Include			Include		
Min. Green:	0	0	0	0	0	0	0	0	0	0	0	0
Lanes:	0 0	0	0 0	1 0	0	0 2	2 0	3	0 0	0 0	3 0	1
Volume Module:												
Base Vol:	0	0	0	144	0	1537	396	1420	0	0	858	561
Growth Adj:	1.00	1.00	1.00	1.00	1.00	1.00	1.00	1.00	1.00	1.00	1.00	1.00
Initial Bse:	0	0	0	144	0	1537	396	1420	0	0	858	561
Added Vol:	0	0	0	0	0	0	0	0	0	0	0	0
PasserByVol:	0	0	0	0	0	0	0	0	0	0	0	0
Initial Fut:	0	0	0	144	0	1537	396	1420	0	0	858	561
User Adj:	1.00	1.00	1.00	1.00	1.00	1.00	1.00	1.00	1.00	1.00	1.00	1.00
PHF Adj:	1.00	1.00	1.00	1.00	1.00	1.00	1.00	1.00	1.00	1.00	1.00	1.00
PHF Volume:	0	0	0	144	0	1537	396	1420	0	0	858	561
Reduct Vol:	0	0	0	0	0	0	0	0	0	0	0	0
Reduced Vol:	0	0	0	144	0	1537	396	1420	0	0	858	561
PCE Adj:	1.00	1.00	1.00	1.00	1.00	1.00	1.00	1.00	1.00	1.00	1.00	1.00
MLF Adj:	1.00	1.00	1.00	1.00	1.00	1.00	1.00	1.00	1.00	1.00	1.00	1.00
FinalVolume:	0	0	0	144	0	1537	396	1420	0	0	858	561
Saturation Flow Module:												
Sat/Lane:	1900	1900	1900	1900	1900	1900	1900	1900	1900	1900	1900	1900
Adjustment:	1.00	1.00	1.00	0.95	1.00	0.75	0.92	0.91	1.00	1.00	0.91	0.85
Lanes:	0.00	0.00	0.00	1.00	0.00	2.00	2.00	3.00	0.00	0.00	3.00	1.00
Final Sat.:	0	0	0	1805	0	2842	3502	5187	0	0	5187	1615
Capacity Analysis Module:												
Vol/Sat:	0.00	0.00	0.00	0.08	0.00	0.54	0.11	0.27	0.00	0.00	0.17	0.35
Crit Moves:						****	****					****
Green/Cycle:	0.00	0.00	0.00	0.48	0.00	0.61	0.13	0.52	0.00	0.00	0.39	0.39
Volume/Cap:	0.00	0.00	0.00	0.17	0.00	0.89	0.89	0.53	0.00	0.00	0.42	0.89
Delay/Veh:	0.0	0.0	0.0	14.7	0.0	22.7	62.0	16.2	0.0	0.0	22.4	42.8
User DelAdj:	1.00	1.00	1.00	1.00	1.00	1.00	1.00	1.00	1.00	1.00	1.00	1.00
AdjDel/Veh:	0.0	0.0	0.0	14.7	0.0	22.7	62.0	16.2	0.0	0.0	22.4	42.8
LOS by Move:	A	A	A	B	A	C	E	B	A	A	C	D
HCM2kAvgQ:	0	0	0	2	0	26	9	11	0	0	7	20

Note: Queue reported is the number of cars per lane.

City of Murrieta General Plan
Future Proposed General Plan
AM Peak Hour

Level Of Service Computation Report
2000 HCM Operations Method (Future Volume Alternative)

Intersection #25 Winchester Road - SR-79 & Benton Road

Cycle (sec): 100 Critical Vol./Cap.(X): 0.976
Loss Time (sec): 0 (Y+R=4.0 sec) Average Delay (sec/veh): 38.8
Optimal Cycle: 180 Level Of Service: D

Street Name:	Winchester Road - SR-79						Benton Road					
Approach:	North Bound			South Bound			East Bound			West Bound		
Movement:	L	T	R	L	T	R	L	T	R	L	T	R
Control:	Protected			Protected			Protected			Protected		
Rights:	Include			Include			Include			Include		
Min. Green:	0	0	0	0	0	0	0	0	0	0	0	0
Lanes:	2	0 3	0 1	2	0 3	0 1	2	0 2	0 2	2	0 2	0 1
Volume Module:												
Base Vol:	490	1366	368	96	2041	400	38	470	978	344	614	32
Growth Adj:	1.00	1.00	1.00	1.00	1.00	1.00	1.00	1.00	1.00	1.00	1.00	1.00
Initial Bse:	490	1366	368	96	2041	400	38	470	978	344	614	32
Added Vol:	0	0	0	0	0	0	0	0	0	0	0	0
PasserByVol:	0	0	0	0	0	0	0	0	0	0	0	0
Initial Fut:	490	1366	368	96	2041	400	38	470	978	344	614	32
User Adj:	1.00	1.00	1.00	1.00	1.00	1.00	1.00	1.00	1.00	1.00	1.00	1.00
PHF Adj:	1.00	1.00	1.00	1.00	1.00	1.00	1.00	1.00	1.00	1.00	1.00	1.00
PHF Volume:	490	1366	368	96	2041	400	38	470	978	344	614	32
Reduct Vol:	0	0	0	0	0	0	0	0	0	0	0	0
Reduced Vol:	490	1366	368	96	2041	400	38	470	978	344	614	32
PCE Adj:	1.00	1.00	1.00	1.00	1.00	1.00	1.00	1.00	1.00	1.00	1.00	1.00
MLF Adj:	1.00	1.00	1.00	1.00	1.00	1.00	1.00	1.00	1.00	1.00	1.00	1.00
FinalVolume:	490	1366	368	96	2041	400	38	470	978	344	614	32
Saturation Flow Module:												
Sat/Lane:	1900	1900	1900	1900	1900	1900	1900	1900	1900	1900	1900	1900
Adjustment:	0.92	0.91	0.85	0.92	0.91	0.85	0.92	0.95	0.75	0.92	0.95	0.85
Lanes:	2.00	3.00	1.00	2.00	3.00	1.00	2.00	2.00	2.00	2.00	2.00	1.00
Final Sat.:	3502	5187	1615	3502	5187	1615	3502	3610	2842	3502	3610	1615
Capacity Analysis Module:												
Vol/Sat:	0.14	0.26	0.23	0.03	0.39	0.25	0.01	0.13	0.34	0.10	0.17	0.02
Crit Moves:	****				****				****	****		
Green/Cycle:	0.14	0.50	0.50	0.05	0.40	0.40	0.03	0.35	0.35	0.10	0.43	0.43
Volume/Cap:	0.98	0.53	0.46	0.53	0.98	0.61	0.40	0.37	0.98	0.98	0.40	0.05
Delay/Veh:	76.5	17.5	16.9	49.3	43.7	25.4	50.6	24.3	54.6	86.1	20.0	16.8
User DelAdj:	1.00	1.00	1.00	1.00	1.00	1.00	1.00	1.00	1.00	1.00	1.00	1.00
AdjDel/Veh:	76.5	17.5	16.9	49.3	43.7	25.4	50.6	24.3	54.6	86.1	20.0	16.8
LOS by Move:	E	B	B	D	D	C	D	C	D	F	C	B
HCM2kAvgQ:	12	11	8	2	29	10	1	6	23	9	7	1

Note: Queue reported is the number of cars per lane.

City of Murrieta General Plan
Future Proposed General Plan
AM Peak Hour

Level Of Service Computation Report
2000 HCM Operations Method (Future Volume Alternative)

Intersection #26 Winchester Road - SR-79 & Via Mira Mosa

Cycle (sec): 100 Critical Vol./Cap.(X): 0.889
Loss Time (sec): 0 (Y+R=4.0 sec) Average Delay (sec/veh): 24.1
Optimal Cycle: 180 Level Of Service: C

Street Name:	Winchester Road - SR-79						Via Mira Mosa					
Approach:	North Bound			South Bound			East Bound			West Bound		
Movement:	L	T	R	L	T	R	L	T	R	L	T	R
Control:	Protected			Protected			Protected			Protected		
Rights:	Include			Include			Include			Include		
Min. Green:	0	0	0	0	0	0	0	0	0	0	0	0
Lanes:	1	0 2	1 0	1	0 2	1 0	1	0 0	1 0	1	0 0	1 0
Volume Module:												
Base Vol:	28	1593	798	319	2788	234	358	49	95	177	19	29
Growth Adj:	1.00	1.00	1.00	1.00	1.00	1.00	1.00	1.00	1.00	1.00	1.00	1.00
Initial Bse:	28	1593	798	319	2788	234	358	49	95	177	19	29
Added Vol:	0	0	0	0	0	0	0	0	0	0	0	0
PasserByVol:	0	0	0	0	0	0	0	0	0	0	0	0
Initial Fut:	28	1593	798	319	2788	234	358	49	95	177	19	29
User Adj:	1.00	1.00	1.00	1.00	1.00	1.00	1.00	1.00	1.00	1.00	1.00	1.00
PHF Adj:	1.00	1.00	1.00	1.00	1.00	1.00	1.00	1.00	1.00	1.00	1.00	1.00
PHF Volume:	28	1593	798	319	2788	234	358	49	95	177	19	29
Reduct Vol:	0	0	0	0	0	0	0	0	0	0	0	0
Reduced Vol:	28	1593	798	319	2788	234	358	49	95	177	19	29
PCE Adj:	1.00	1.00	1.00	1.00	1.00	1.00	1.00	1.00	1.00	1.00	1.00	1.00
MLF Adj:	1.00	1.00	1.00	1.00	1.00	1.00	1.00	1.00	1.00	1.00	1.00	1.00
FinalVolume:	28	1593	798	319	2788	234	358	49	95	177	19	29
Saturation Flow Module:												
Sat/Lane:	1900	1900	1900	1900	1900	1900	1900	1900	1900	1900	1900	1900
Adjustment:	0.95	0.86	0.86	0.95	0.90	0.90	0.95	0.90	0.90	0.95	0.91	0.91
Lanes:	1.00	2.00	1.00	1.00	2.77	0.23	1.00	0.34	0.66	1.00	0.40	0.60
Final Sat.:	1805	3285	1643	1805	4728	397	1805	583	1129	1805	684	1043
Capacity Analysis Module:												
Vol/Sat:	0.02	0.48	0.49	0.18	0.59	0.59	0.20	0.08	0.08	0.10	0.03	0.03
Crit Moves:			****	****			****				****	
Green/Cycle:	0.02	0.55	0.55	0.20	0.73	0.73	0.22	0.12	0.12	0.14	0.03	0.03
Volume/Cap:	0.81	0.89	0.89	0.89	0.81	0.81	0.89	0.72	0.72	0.72	0.89	0.89
Delay/Veh:	129.5	23.9	24.0	61.6	10.6	10.6	58.4	54.1	54.1	50.9	131	130.8
User DelAdj:	1.00	1.00	1.00	1.00	1.00	1.00	1.00	1.00	1.00	1.00	1.00	1.00
AdjDel/Veh:	129.5	23.9	24.0	61.6	10.6	10.6	58.4	54.1	54.1	50.9	131	130.8
LOS by Move:	F	C	C	E	B	B	E	D	D	D	F	F
HCM2kAvgQ:	2	27	27	13	24	24	14	6	6	7	3	3

Note: Queue reported is the number of cars per lane.

City of Murrieta General Plan
Future Proposed General Plan
AM Peak Hour

Level Of Service Computation Report
2000 HCM Operations Method (Future Volume Alternative)

Intersection #27 Monroe Ave & Los Alamos

Cycle (sec): 100 Critical Vol./Cap.(X): 0.603
Loss Time (sec): 0 (Y+R=4.0 sec) Average Delay (sec/veh): 24.5
Optimal Cycle: 57 Level Of Service: C

Street Name:	Monroe Ave						Los Alamos					
Approach:	North Bound			South Bound			East Bound			West Bound		
Movement:	L -	T -	R	L -	T -	R	L -	T -	R	L -	T -	R
Control:	Protected			Protected			Protected			Protected		
Rights:	Include			Include			Include			Include		
Min. Green:	0	0	0	0	0	0	0	0	0	0	0	0
Lanes:	1 0	1	1 0	2 0	2	0 1	1 0	1	1 0	1 0	2	0 1
Volume Module:												
Base Vol:	28	223	188	569	475	208	46	351	134	63	994	473
Growth Adj:	1.00	1.00	1.00	1.00	1.00	1.00	1.00	1.00	1.00	1.00	1.00	1.00
Initial Bse:	28	223	188	569	475	208	46	351	134	63	994	473
Added Vol:	0	0	0	0	0	0	0	0	0	0	0	0
PasserByVol:	0	0	0	0	0	0	0	0	0	0	0	0
Initial Fut:	28	223	188	569	475	208	46	351	134	63	994	473
User Adj:	1.00	1.00	1.00	1.00	1.00	1.00	1.00	1.00	1.00	1.00	1.00	1.00
PHF Adj:	1.00	1.00	1.00	1.00	1.00	1.00	1.00	1.00	1.00	1.00	1.00	1.00
PHF Volume:	28	223	188	569	475	208	46	351	134	63	994	473
Reduct Vol:	0	0	0	0	0	0	0	0	0	0	0	0
Reduced Vol:	28	223	188	569	475	208	46	351	134	63	994	473
PCE Adj:	1.00	1.00	1.00	1.00	1.00	1.00	1.00	1.00	1.00	1.00	1.00	1.00
MLF Adj:	1.00	1.00	1.00	1.00	1.00	1.00	1.00	1.00	1.00	1.00	1.00	1.00
FinalVolume:	28	223	188	569	475	208	46	351	134	63	994	473
Saturation Flow Module:												
Sat/Lane:	1900	1900	1900	1900	1900	1900	1900	1900	1900	1900	1900	1900
Adjustment:	0.95	0.88	0.88	0.92	0.95	0.85	0.95	0.91	0.91	0.95	0.95	0.85
Lanes:	1.00	1.09	0.91	2.00	2.00	1.00	1.00	1.45	0.55	1.00	2.00	1.00
Final Sat.:	1805	1824	1537	3502	3610	1615	1805	2505	957	1805	3610	1615
Capacity Analysis Module:												
Vol/Sat:	0.02	0.12	0.12	0.16	0.13	0.13	0.03	0.14	0.14	0.03	0.28	0.29
Crit Moves:		****		****			****					****
Green/Cycle:	0.05	0.20	0.20	0.27	0.42	0.42	0.04	0.42	0.42	0.11	0.49	0.49
Volume/Cap:	0.31	0.60	0.60	0.60	0.31	0.30	0.60	0.33	0.33	0.33	0.57	0.60
Delay/Veh:	47.8	37.7	37.7	33.0	19.3	19.4	59.9	19.5	19.5	42.5	18.7	20.0
User DelAdj:	1.00	1.00	1.00	1.00	1.00	1.00	1.00	1.00	1.00	1.00	1.00	1.00
AdjDel/Veh:	47.8	37.7	37.7	33.0	19.3	19.4	59.9	19.5	19.5	42.5	18.7	20.0
LOS by Move:	D	D	D	C	B	B	E	B	B	D	B	C
HCM2kAvgQ:	1	7	7	9	5	4	2	5	5	2	12	11

Note: Queue reported is the number of cars per lane.

City of Murrieta General Plan
Future Proposed General Plan
AM Peak Hour

Level Of Service Computation Report
2000 HCM Operations Method (Future Volume Alternative)

Intersection #28 Jefferson Avenue & Murrieta Hot Springs Road

Cycle (sec): 100 Critical Vol./Cap.(X): 1.440
Loss Time (sec): 0 (Y+R=4.0 sec) Average Delay (sec/veh): 133.3
Optimal Cycle: 180 Level Of Service: F

Street Name:	Jefferson Avenue						Murrieta Hot Springs Road					
Approach:	North Bound			South Bound			East Bound			West Bound		
Movement:	L -	T -	R	L -	T -	R	L -	T -	R	L -	T -	R
Control:	Protected			Protected			Protected			Protected		
Rights:	Include			Include			Include			Include		
Min. Green:	0	0	0	0	0	0	0	0	0	0	0	0
Lanes:	1 0	3	0 1	1 0	2	1 0	1 0	2	1 0	1 0	2	1 0
Volume Module:												
Base Vol:	10	1074	495	919	1236	77	15	76	21	876	93	921
Growth Adj:	1.00	1.00	1.00	1.00	1.00	1.00	1.00	1.00	1.00	1.00	1.00	1.00
Initial Bse:	10	1074	495	919	1236	77	15	76	21	876	93	921
Added Vol:	0	0	0	0	0	0	0	0	0	0	0	0
PasserByVol:	0	0	0	0	0	0	0	0	0	0	0	0
Initial Fut:	10	1074	495	919	1236	77	15	76	21	876	93	921
User Adj:	1.00	1.00	1.00	1.00	1.00	1.00	1.00	1.00	1.00	1.00	1.00	1.00
PHF Adj:	1.00	1.00	1.00	1.00	1.00	1.00	1.00	1.00	1.00	1.00	1.00	1.00
PHF Volume:	10	1074	495	919	1236	77	15	76	21	876	93	921
Reduct Vol:	0	0	0	0	0	0	0	0	0	0	0	0
Reduced Vol:	10	1074	495	919	1236	77	15	76	21	876	93	921
PCE Adj:	1.00	1.00	1.00	1.00	1.00	1.00	1.00	1.00	1.00	1.00	1.00	1.00
MLF Adj:	1.00	1.00	1.00	1.00	1.00	1.00	1.00	1.00	1.00	1.00	1.00	1.00
FinalVolume:	10	1074	495	919	1236	77	15	76	21	876	93	921
Saturation Flow Module:												
Sat/Lane:	1900	1900	1900	1900	1900	1900	1900	1900	1900	1900	1900	1900
Adjustment:	0.95	0.91	0.85	0.95	0.90	0.90	0.95	0.88	0.88	0.95	0.79	0.79
Lanes:	1.00	3.00	1.00	1.00	2.82	0.18	1.00	2.35	0.65	1.00	2.00	1.00
Final Sat.:	1805	5187	1615	1805	4839	301	1805	3934	1087	1805	2988	1494
Capacity Analysis Module:												
Vol/Sat:	0.01	0.21	0.31	0.51	0.26	0.26	0.01	0.02	0.02	0.49	0.03	0.62
Crit Moves:			****	****			****					****
Green/Cycle:	0.01	0.21	0.21	0.35	0.55	0.55	0.01	0.02	0.02	0.42	0.43	0.43
Volume/Cap:	0.46	0.97	1.44	1.44	0.46	0.46	1.44	1.16	1.16	1.16	0.07	1.44
Delay/Veh:	63.8	59.9	253.4	239.4	13.5	13.5	497.9	198	198.4	116.9	16.9	234.9
User DelAdj:	1.00	1.00	1.00	1.00	1.00	1.00	1.00	1.00	1.00	1.00	1.00	1.00
AdjDel/Veh:	63.8	59.9	253.4	239.4	13.5	13.5	497.9	198	198.4	116.9	16.9	234.9
LOS by Move:	E	E	F	F	B	B	F	F	F	F	B	F
HCM2kAvgQ:	1	17	36	64	9	9	2	3	3	45	1	70

Note: Queue reported is the number of cars per lane.

City of Murrieta General Plan
Future Proposed General Plan
AM Peak Hour

Level Of Service Computation Report
2000 HCM Operations Method (Future Volume Alternative)

Intersection #29 Madison Avenue & Murrieta Hot Springs Road

Cycle (sec): 100 | Critical Vol./Cap.(X): 0.678
Loss Time (sec): 0 (Y+R=4.0 sec) | Average Delay (sec/veh): 26.6
Optimal Cycle: 71 | Level Of Service: C

Street Name:	Madison Avenue						Murrieta Hot Springs Road					
Approach:	North Bound			South Bound			East Bound			West Bound		
Movement:	L	T	R	L	T	R	L	T	R	L	T	R
Control:	Protected			Protected			Protected			Protected		
Rights:	Include			Include			Include			Include		
Min. Green:	0	0	0	0	0	0	0	0	0	0	0	0
Lanes:	2 0	2 0	1	2 0	1 1	0	2 0	3 1	0	2 0	3 0	1
Volume Module:												
Base Vol:	127	67	324	183	184	156	117	1137	271	754	1769	74
Growth Adj:	1.00	1.00	1.00	1.00	1.00	1.00	1.00	1.00	1.00	1.00	1.00	1.00
Initial Bse:	127	67	324	183	184	156	117	1137	271	754	1769	74
Added Vol:	0	0	0	0	0	0	0	0	0	0	0	0
PasserByVol:	0	0	0	0	0	0	0	0	0	0	0	0
Initial Fut:	127	67	324	183	184	156	117	1137	271	754	1769	74
User Adj:	1.00	1.00	1.00	1.00	1.00	1.00	1.00	1.00	1.00	1.00	1.00	1.00
PHF Adj:	1.00	1.00	1.00	1.00	1.00	1.00	1.00	1.00	1.00	1.00	1.00	1.00
PHF Volume:	127	67	324	183	184	156	117	1137	271	754	1769	74
Reduct Vol:	0	0	0	0	0	0	0	0	0	0	0	0
Reduced Vol:	127	67	324	183	184	156	117	1137	271	754	1769	74
PCE Adj:	1.00	1.00	1.00	1.00	1.00	1.00	1.00	1.00	1.00	1.00	1.00	1.00
MLF Adj:	1.00	1.00	1.00	1.00	1.00	1.00	1.00	1.00	1.00	1.00	1.00	1.00
FinalVolume:	127	67	324	183	184	156	117	1137	271	754	1769	74
Saturation Flow Module:												
Sat/Lane:	1900	1900	1900	1900	1900	1900	1900	1900	1900	1900	1900	1900
Adjustment:	0.92	0.95	0.85	0.92	0.88	0.88	0.92	0.88	0.88	0.92	0.91	0.85
Lanes:	2.00	2.00	1.00	2.00	1.08	0.92	2.00	3.23	0.77	2.00	3.00	1.00
Final Sat.:	3502	3610	1615	3502	1819	1542	3502	5423	1293	3502	5187	1615
Capacity Analysis Module:												
Vol/Sat:	0.04	0.02	0.20	0.05	0.10	0.10	0.03	0.21	0.21	0.22	0.34	0.05
Crit Moves:			****	****				****		****		
Green/Cycle:	0.10	0.30	0.30	0.08	0.27	0.27	0.06	0.31	0.31	0.32	0.57	0.57
Volume/Cap:	0.37	0.06	0.68	0.68	0.37	0.37	0.60	0.68	0.68	0.68	0.60	0.08
Delay/Veh:	42.8	25.3	34.9	51.7	29.5	29.5	51.1	31.1	31.1	31.4	14.3	9.7
User DelAdj:	1.00	1.00	1.00	1.00	1.00	1.00	1.00	1.00	1.00	1.00	1.00	1.00
AdjDel/Veh:	42.8	25.3	34.9	51.7	29.5	29.5	51.1	31.1	31.1	31.4	14.3	9.7
LOS by Move:	D	C	C	D	C	C	D	C	C	C	B	A
HCM2kAvgQ:	2	1	10	4	5	5	3	11	11	11	13	1

Note: Queue reported is the number of cars per lane.

City of Murrieta General Plan
Future Proposed General Plan
AM Peak Hour

Level Of Service Computation Report
2000 HCM Operations Method (Future Volume Alternative)

Intersection #30 I-15 SB Off-Ramp & Murrieta Hot Springs Road

Cycle (sec): 100 | Critical Vol./Cap.(X): 0.723
Loss Time (sec): 0 (Y+R=4.0 sec) | Average Delay (sec/veh): 16.1
Optimal Cycle: 82 | Level Of Service: B

Street Name:	I-15 SB Off-Ramp						Murrieta Hot Springs Road					
Approach:	North Bound			South Bound			East Bound			West Bound		
Movement:	L	T	R	L	T	R	L	T	R	L	T	R
Control:	Protected			Protected			Protected			Protected		
Rights:	Include			Include			Ignore			Ignore		
Min. Green:	0	0	0	0	0	0	0	0	0	0	0	0
Lanes:	0 0	0 0	0	1 0	1! 0	1	0 0	3 0	1	0 0	3 0	1
Volume Module:												
Base Vol:	0	0	0	808	0	421	0	1385	215	0	2301	47
Growth Adj:	1.00	1.00	1.00	1.00	1.00	1.00	1.00	1.00	1.00	1.00	1.00	1.00
Initial Bse:	0	0	0	808	0	421	0	1385	215	0	2301	47
Added Vol:	0	0	0	0	0	0	0	0	0	0	0	0
PasserByVol:	0	0	0	0	0	0	0	0	0	0	0	0
Initial Fut:	0	0	0	808	0	421	0	1385	215	0	2301	47
User Adj:	1.00	1.00	1.00	1.00	1.00	1.00	1.00	1.00	0.00	1.00	1.00	0.00
PHF Adj:	1.00	1.00	1.00	1.00	1.00	1.00	1.00	1.00	0.00	1.00	1.00	0.00
PHF Volume:	0	0	0	808	0	421	0	1385	0	0	2301	0
Reduct Vol:	0	0	0	0	0	0	0	0	0	0	0	0
Reduced Vol:	0	0	0	808	0	421	0	1385	0	0	2301	0
PCE Adj:	1.00	1.00	1.00	1.00	1.00	1.00	1.00	1.00	0.00	1.00	1.00	0.00
MLF Adj:	1.00	1.00	1.00	1.00	1.00	1.00	1.00	1.00	0.00	1.00	1.00	0.00
FinalVolume:	0	0	0	808	0	421	0	1385	0	0	2301	0
Saturation Flow Module:												
Sat/Lane:	1900	1900	1900	1900	1900	1900	1900	1900	1900	1900	1900	1900
Adjustment:	1.00	1.00	1.00	0.92	1.00	0.92	1.00	0.91	1.00	1.00	0.91	1.00
Lanes:	0.00	0.00	0.00	1.66	0.00	1.34	0.00	3.00	1.00	0.00	3.00	1.00
Final Sat.:	0	0	0	2893	0	2343	0	5187	1900	0	5187	1900
Capacity Analysis Module:												
Vol/Sat:	0.00	0.00	0.00	0.28	0.00	0.18	0.00	0.27	0.00	0.00	0.44	0.00
Crit Moves:				****			****				****	
Green/Cycle:	0.00	0.00	0.00	0.39	0.00	0.39	0.00	0.61	0.00	0.00	0.61	0.00
Volume/Cap:	0.00	0.00	0.00	0.72	0.00	0.47	0.00	0.44	0.00	0.00	0.72	0.00
Delay/Veh:	0.0	0.0	0.0	27.7	0.0	23.1	0.0	10.3	0.0	0.0	14.3	0.0
User DelAdj:	1.00	1.00	1.00	1.00	1.00	1.00	1.00	1.00	1.00	1.00	1.00	1.00
AdjDel/Veh:	0.0	0.0	0.0	27.7	0.0	23.1	0.0	10.3	0.0	0.0	14.3	0.0
LOS by Move:	A	A	A	C	A	C	A	B	A	A	B	A
HCM2kAvgQ:	0	0	0	14	0	7	0	8	0	0	19	0

Note: Queue reported is the number of cars per lane.

City of Murrieta General Plan
Future Proposed General Plan
AM Peak Hour

Level Of Service Computation Report
2000 HCM Operations Method (Future Volume Alternative)

Intersection #31 I-15 NB Off-Ramp & Murrieta Hot Springs Road

Cycle (sec): 100 Critical Vol./Cap.(X): 0.402
Loss Time (sec): 0 (Y+R=4.0 sec) Average Delay (sec/veh): 5.7
Optimal Cycle: 38 Level Of Service: A

Street Name:	I-15 NB Off-Ramp						Murrieta Hot Springs Road					
Approach:	North Bound			South Bound			East Bound			West Bound		
Movement:	L	T	R	L	T	R	L	T	R	L	T	R
Control:	Protected			Protected			Protected			Protected		
Rights:	Include			Include			Ignore			Ignore		
Min. Green:	0	0	0	0	0	0	0	0	0	0	0	0
Lanes:	2	0 0	0 1	0	0 0	0 0	0	0 4	0 1	0	0 4	0 1
Volume Module:												
Base Vol:	292	0	60	0	0	0	0	2202	210	0	1546	598
Growth Adj:	1.00	1.00	1.00	1.00	1.00	1.00	1.00	1.00	1.00	1.00	1.00	1.00
Initial Bse:	292	0	60	0	0	0	0	2202	210	0	1546	598
Added Vol:	0	0	0	0	0	0	0	0	0	0	0	0
PasserByVol:	0	0	0	0	0	0	0	0	0	0	0	0
Initial Fut:	292	0	60	0	0	0	0	2202	210	0	1546	598
User Adj:	1.00	1.00	1.00	1.00	1.00	1.00	1.00	1.00	0.00	1.00	1.00	0.00
PHF Adj:	1.00	1.00	1.00	1.00	1.00	1.00	1.00	1.00	0.00	1.00	1.00	0.00
PHF Volume:	292	0	60	0	0	0	0	2202	0	0	1546	0
Reduct Vol:	0	0	0	0	0	0	0	0	0	0	0	0
Reduced Vol:	292	0	60	0	0	0	0	2202	0	0	1546	0
PCE Adj:	1.00	1.00	1.00	1.00	1.00	1.00	1.00	1.00	0.00	1.00	1.00	0.00
MLF Adj:	1.00	1.00	1.00	1.00	1.00	1.00	1.00	1.00	0.00	1.00	1.00	0.00
FinalVolume:	292	0	60	0	0	0	0	2202	0	0	1546	0
Saturation Flow Module:												
Sat/Lane:	1900	1900	1900	1900	1900	1900	1900	1900	1900	1900	1900	1900
Adjustment:	0.92	1.00	0.85	1.00	1.00	1.00	1.00	0.91	1.00	1.00	0.91	1.00
Lanes:	2.00	0.00	1.00	0.00	0.00	0.00	0.00	4.00	1.00	0.00	4.00	1.00
Final Sat.:	3502	0	1615	0	0	0	0	6916	1900	0	6916	1900
Capacity Analysis Module:												
Vol/Sat:	0.08	0.00	0.04	0.00	0.00	0.00	0.00	0.32	0.00	0.00	0.22	0.00
Crit Moves:	****							****		****		
Green/Cycle:	0.21	0.00	0.21	0.00	0.00	0.00	0.00	0.79	0.00	0.00	0.79	0.00
Volume/Cap:	0.40	0.00	0.18	0.00	0.00	0.00	0.00	0.40	0.00	0.00	0.28	0.00
Delay/Veh:	34.6	0.0	32.9	0.0	0.0	0.0	0.0	3.2	0.0	0.0	2.8	0.0
User DelAdj:	1.00	1.00	1.00	1.00	1.00	1.00	1.00	1.00	1.00	1.00	1.00	1.00
AdjDel/Veh:	34.6	0.0	32.9	0.0	0.0	0.0	0.0	3.2	0.0	0.0	2.8	0.0
LOS by Move:	C	A	C	A	A	A	A	A	A	A	A	A
HCM2kAvgQ:	4	0	2	0	0	0	0	6	0	0	4	0

Note: Queue reported is the number of cars per lane.

City of Murrieta General Plan
Future Proposed General Plan
AM Peak Hour

Level Of Service Computation Report
2000 HCM Operations Method (Future Volume Alternative)

Intersection #32 I-215 SB Off-Ramp & Murrieta Hot Springs Road

Cycle (sec): 100 Critical Vol./Cap.(X): 0.702
Loss Time (sec): 0 (Y+R=4.0 sec) Average Delay (sec/veh): 12.5
Optimal Cycle: 63 Level Of Service: B

Street Name:	I-215 SB Off-Ramp						Murrieta Hot Springs Road					
Approach:	North Bound			South Bound			East Bound			West Bound		
Movement:	L	T	R	L	T	R	L	T	R	L	T	R
Control:	Protected			Protected			Permitted			Permitted		
Rights:	Include			Include			Ignore			Ignore		
Min. Green:	0	0	0	0	0	0	0	0	0	0	0	0
Lanes:	0	0 0	0 0	1	0 1!	0 1	0	0 3	0 1	0	0 3	0 1
Volume Module:												
Base Vol:	0	0	0	483	0	524	0	1838	53	0	2599	378
Growth Adj:	1.00	1.00	1.00	1.00	1.00	1.00	1.00	1.00	1.00	1.00	1.00	1.00
Initial Bse:	0	0	0	483	0	524	0	1838	53	0	2599	378
Added Vol:	0	0	0	0	0	0	0	0	0	0	0	0
PasserByVol:	0	0	0	0	0	0	0	0	0	0	0	0
Initial Fut:	0	0	0	483	0	524	0	1838	53	0	2599	378
User Adj:	1.00	1.00	1.00	1.00	1.00	1.00	1.00	1.00	0.00	1.00	1.00	0.00
PHF Adj:	1.00	1.00	1.00	1.00	1.00	1.00	1.00	1.00	0.00	1.00	1.00	0.00
PHF Volume:	0	0	0	483	0	524	0	1838	0	0	2599	0
Reduct Vol:	0	0	0	0	0	0	0	0	0	0	0	0
Reduced Vol:	0	0	0	483	0	524	0	1838	0	0	2599	0
PCE Adj:	1.00	1.00	1.00	1.00	1.00	1.00	1.00	1.00	0.00	1.00	1.00	0.00
MLF Adj:	1.00	1.00	1.00	1.00	1.00	1.00	1.00	1.00	0.00	1.00	1.00	0.00
FinalVolume:	0	0	0	483	0	524	0	1838	0	0	2599	0
Saturation Flow Module:												
Sat/Lane:	1900	1900	1900	1900	1900	1900	1900	1900	1900	1900	1900	1900
Adjustment:	1.00	1.00	1.00	0.90	1.00	0.90	1.00	0.91	1.00	1.00	0.91	1.00
Lanes:	0.00	0.00	0.00	1.48	0.00	1.52	0.00	3.00	1.00	0.00	3.00	1.00
Final Sat.:	0	0	0	2532	0	2602	0	5187	1900	0	5187	1900
Capacity Analysis Module:												
Vol/Sat:	0.00	0.00	0.00	0.19	0.00	0.20	0.00	0.35	0.00	0.00	0.50	0.00
Crit Moves:						****					****	
Green/Cycle:	0.00	0.00	0.00	0.29	0.00	0.29	0.00	0.71	0.00	0.00	0.71	0.00
Volume/Cap:	0.00	0.00	0.00	0.67	0.00	0.70	0.00	0.50	0.00	0.00	0.70	0.00
Delay/Veh:	0.0	0.0	0.0	32.6	0.0	33.4	0.0	6.5	0.0	0.0	8.9	0.0
User DelAdj:	1.00	1.00	1.00	1.00	1.00	1.00	1.00	1.00	1.00	1.00	1.00	1.00
AdjDel/Veh:	0.0	0.0	0.0	32.6	0.0	33.4	0.0	6.5	0.0	0.0	8.9	0.0
LOS by Move:	A	A	A	C	A	C	A	A	A	A	A	A
HCM2kAvgQ:	0	0	0	10	0	11	0	9	0	0	17	0

Note: Queue reported is the number of cars per lane.

City of Murrieta General Plan
Future Proposed General Plan
AM Peak Hour

Level Of Service Computation Report
2000 HCM Operations Method (Future Volume Alternative)

Intersection #33 I-215 NB Off-Ramp & Murrieta Hot Springs Road

Cycle (sec): 100 Critical Vol./Cap.(X): 0.604
Loss Time (sec): 0 (Y+R=4.0 sec) Average Delay (sec/veh): 5.6
Optimal Cycle: 47 Level Of Service: A

Street Name:	I-215 NB Off-Ramp						Murrieta Hot Springs Road					
Approach:	North Bound			South Bound			East Bound			West Bound		
Movement:	L -	T -	R	L -	T -	R	L -	T -	R	L -	T -	R
Control:	Protected			Protected			Permitted			Permitted		
Rights:	Include			Include			Ignore			Ignore		
Min. Green:	0	0	0	0	0	0	0	0	0	0	0	0
Lanes:	2 0	0	0 2	0 0	0	0 0	0 0	3	0 1	0 0	3	0 1
Volume Module:												
Base Vol:	343	0	24	0	0	0	0	1583	115	0	2623	663
Growth Adj:	1.00	1.00	1.00	1.00	1.00	1.00	1.00	1.00	1.00	1.00	1.00	1.00
Initial Bse:	343	0	24	0	0	0	0	1583	115	0	2623	663
Added Vol:	0	0	0	0	0	0	0	0	0	0	0	0
PasserByVol:	0	0	0	0	0	0	0	0	0	0	0	0
Initial Fut:	343	0	24	0	0	0	0	1583	115	0	2623	663
User Adj:	1.00	1.00	1.00	1.00	1.00	1.00	1.00	1.00	0.00	1.00	1.00	0.00
PHF Adj:	1.00	1.00	1.00	1.00	1.00	1.00	1.00	1.00	0.00	1.00	1.00	0.00
PHF Volume:	343	0	24	0	0	0	0	1583	0	0	2623	0
Reduct Vol:	0	0	0	0	0	0	0	0	0	0	0	0
Reduced Vol:	343	0	24	0	0	0	0	1583	0	0	2623	0
PCE Adj:	1.00	1.00	1.00	1.00	1.00	1.00	1.00	1.00	0.00	1.00	1.00	0.00
MLF Adj:	1.00	1.00	1.00	1.00	1.00	1.00	1.00	1.00	0.00	1.00	1.00	0.00
FinalVolume:	343	0	24	0	0	0	0	1583	0	0	2623	0
Saturation Flow Module:												
Sat/Lane:	1900	1900	1900	1900	1900	1900	1900	1900	1900	1900	1900	1900
Adjustment:	0.92	1.00	0.75	1.00	1.00	1.00	1.00	0.91	1.00	1.00	0.91	1.00
Lanes:	2.00	0.00	2.00	0.00	0.00	0.00	0.00	3.00	1.00	0.00	3.00	1.00
Final Sat.:	3502	0	2842	0	0	0	0	5187	1900	0	5187	1900
Capacity Analysis Module:												
Vol/Sat:	0.10	0.00	0.01	0.00	0.00	0.00	0.00	0.31	0.00	0.00	0.51	0.00
Crit Moves:	****										****	
Green/Cycle:	0.16	0.00	0.16	0.00	0.00	0.00	0.00	0.84	0.00	0.00	0.84	0.00
Volume/Cap:	0.60	0.00	0.05	0.00	0.00	0.00	0.00	0.36	0.00	0.00	0.60	0.00
Delay/Veh:	40.7	0.0	35.4	0.0	0.0	0.0	0.0	1.9	0.0	0.0	2.9	0.0
User DelAdj:	1.00	1.00	1.00	1.00	1.00	1.00	1.00	1.00	1.00	1.00	1.00	1.00
AdjDel/Veh:	40.7	0.0	35.4	0.0	0.0	0.0	0.0	1.9	0.0	0.0	2.9	0.0
LOS by Move:	D	A	D	A	A	A	A	A	A	A	A	A
HCM2kAvgQ:	6	0	0	0	0	0	0	4	0	0	10	0

Note: Queue reported is the number of cars per lane.

City of Murrieta General Plan
Future Proposed General Plan
AM Peak Hour

Level Of Service Computation Report
2000 HCM Operations Method (Future Volume Alternative)

Intersection #34 Jackson Avenue & Murrieta Hot Springs Road

Cycle (sec): 100 Critical Vol./Cap.(X): 0.410
Loss Time (sec): 0 (Y+R=4.0 sec) Average Delay (sec/veh): 5.1
Optimal Cycle: 39 Level Of Service: A

Street Name:	Jackson Avenue						Murrieta Hot Springs Road					
Approach:	North Bound			South Bound			East Bound			West Bound		
Movement:	L -	T -	R	L -	T -	R	L -	T -	R	L -	T -	R
Control:	Protected			Protected			Protected			Protected		
Rights:	Include			Include			Include			Include		
Min. Green:	0	0	0	0	0	0	0	0	0	0	0	0
Lanes:	2 0	0	0 2	0 0	0	0 0	0 0	3	0 1	1 0	3	0 0
Volume Module:												
Base Vol:	68	0	52	0	0	0	0	1217	38	149	2024	0
Growth Adj:	1.00	1.00	1.00	1.00	1.00	1.00	1.00	1.00	1.00	1.00	1.00	1.00
Initial Bse:	68	0	52	0	0	0	0	1217	38	149	2024	0
Added Vol:	0	0	0	0	0	0	0	0	0	0	0	0
PasserByVol:	0	0	0	0	0	0	0	0	0	0	0	0
Initial Fut:	68	0	52	0	0	0	0	1217	38	149	2024	0
User Adj:	1.00	1.00	1.00	1.00	1.00	1.00	1.00	1.00	1.00	1.00	1.00	1.00
PHF Adj:	1.00	1.00	1.00	1.00	1.00	1.00	1.00	1.00	1.00	1.00	1.00	1.00
PHF Volume:	68	0	52	0	0	0	0	1217	38	149	2024	0
Reduct Vol:	0	0	0	0	0	0	0	0	0	0	0	0
Reduced Vol:	68	0	52	0	0	0	0	1217	38	149	2024	0
PCE Adj:	1.00	1.00	1.00	1.00	1.00	1.00	1.00	1.00	1.00	1.00	1.00	1.00
MLF Adj:	1.00	1.00	1.00	1.00	1.00	1.00	1.00	1.00	1.00	1.00	1.00	1.00
FinalVolume:	68	0	52	0	0	0	0	1217	38	149	2024	0
Saturation Flow Module:												
Sat/Lane:	1900	1900	1900	1900	1900	1900	1900	1900	1900	1900	1900	1900
Adjustment:	0.92	1.00	0.75	1.00	1.00	1.00	1.00	0.91	0.85	0.95	0.91	1.00
Lanes:	2.00	0.00	2.00	0.00	0.00	0.00	0.00	3.00	1.00	1.00	3.00	0.00
Final Sat.:	3502	0	2842	0	0	0	0	5187	1615	1805	5187	0
Capacity Analysis Module:												
Vol/Sat:	0.02	0.00	0.02	0.00	0.00	0.00	0.00	0.23	0.02	0.08	0.39	0.00
Crit Moves:	****						****				****	
Green/Cycle:	0.05	0.00	0.05	0.00	0.00	0.00	0.00	0.70	0.70	0.25	0.95	0.00
Volume/Cap:	0.41	0.00	0.39	0.00	0.00	0.00	0.00	0.33	0.03	0.33	0.41	0.00
Delay/Veh:	47.9	0.0	48.1	0.0	0.0	0.0	0.0	5.8	4.5	31.3	0.2	0.0
User DelAdj:	1.00	1.00	1.00	1.00	1.00	1.00	1.00	1.00	1.00	1.00	1.00	1.00
AdjDel/Veh:	47.9	0.0	48.1	0.0	0.0	0.0	0.0	5.8	4.5	31.3	0.2	0.0
LOS by Move:	D	A	D	A	A	A	A	A	A	C	A	A
HCM2kAvgQ:	2	0	1	0	0	0	0	5	0	4	2	0

Note: Queue reported is the number of cars per lane.

City of Murrieta General Plan
Future Proposed General Plan
AM Peak Hour

Level Of Service Computation Report
2000 HCM Operations Method (Future Volume Alternative)

Intersection #35 Margarita Road & Murrieta Hot Springs Road

Cycle (sec): 100 Critical Vol./Cap.(X): 0.665
Loss Time (sec): 0 (Y+R=4.0 sec) Average Delay (sec/veh): 24.6
Optimal Cycle: 68 Level Of Service: C

Street Name:	Margarita Road						Murrieta Hot Springs Road					
Approach:	North Bound			South Bound			East Bound			West Bound		
Movement:	L -	T -	R	L -	T -	R	L -	T -	R	L -	T -	R
Control:	Split Phase			Split Phase			Protected			Protected		
Rights:	Include			Include			Include			Include		
Min. Green:	0	0	0	0	0	0	0	0	0	0	0	0
Lanes:	2 0	1 0	1	0	1 0	0 1	1 0	2 1	0	1 0	2 1	0
Volume Module:												
Base Vol:	640	60	128	41	17	7	161	750	462	302	1793	71
Growth Adj:	1.00	1.00	1.00	1.00	1.00	1.00	1.00	1.00	1.00	1.00	1.00	1.00
Initial Bse:	640	60	128	41	17	7	161	750	462	302	1793	71
Added Vol:	0	0	0	0	0	0	0	0	0	0	0	0
PasserByVol:	0	0	0	0	0	0	0	0	0	0	0	0
Initial Fut:	640	60	128	41	17	7	161	750	462	302	1793	71
User Adj:	1.00	1.00	1.00	1.00	1.00	1.00	1.00	1.00	1.00	1.00	1.00	1.00
PHF Adj:	1.00	1.00	1.00	1.00	1.00	1.00	1.00	1.00	1.00	1.00	1.00	1.00
PHF Volume:	640	60	128	41	17	7	161	750	462	302	1793	71
Reduct Vol:	0	0	0	0	0	0	0	0	0	0	0	0
Reduced Vol:	640	60	128	41	17	7	161	750	462	302	1793	71
PCE Adj:	1.00	1.00	1.00	1.00	1.00	1.00	1.00	1.00	1.00	1.00	1.00	1.00
MLF Adj:	1.00	1.00	1.00	1.00	1.00	1.00	1.00	1.00	1.00	1.00	1.00	1.00
FinalVolume:	640	60	128	41	17	7	161	750	462	302	1793	71
Saturation Flow Module:												
Sat/Lane:	1900	1900	1900	1900	1900	1900	1900	1900	1900	1900	1900	1900
Adjustment:	0.92	1.00	0.85	0.97	0.97	0.85	0.95	0.86	0.86	0.95	0.90	0.90
Lanes:	2.00	1.00	1.00	0.71	0.29	1.00	1.00	2.00	1.00	1.00	2.89	0.11
Final Sat.:	3502	1900	1615	1297	538	1615	1805	3261	1630	1805	4959	196
Capacity Analysis Module:												
Vol/Sat:	0.18	0.03	0.08	0.03	0.03	0.00	0.09	0.23	0.28	0.17	0.36	0.36
Crit Moves:	****			****					****	****		
Green/Cycle:	0.27	0.27	0.27	0.05	0.05	0.05	0.13	0.43	0.43	0.25	0.54	0.54
Volume/Cap:	0.67	0.11	0.29	0.67	0.67	0.09	0.67	0.54	0.67	0.67	0.67	0.67
Delay/Veh:	34.0	27.2	28.9	64.6	64.6	46.1	48.0	21.7	23.9	37.4	16.9	16.9
User DelAdj:	1.00	1.00	1.00	1.00	1.00	1.00	1.00	1.00	1.00	1.00	1.00	1.00
AdjDel/Veh:	34.0	27.2	28.9	64.6	64.6	46.1	48.0	21.7	23.9	37.4	16.9	16.9
LOS by Move:	C	C	C	E	E	D	D	C	C	D	B	B
HCM2kAvgQ:	10	1	3	3	3	0	6	10	13	9	15	15

Note: Queue reported is the number of cars per lane.

City of Murrieta General Plan
Future Proposed General Plan
AM Peak Hour

Level Of Service Computation Report
2000 HCM Operations Method (Future Volume Alternative)

Intersection #36 French Valley Parkway & Murrieta Hot Springs Road

Cycle (sec): 100 Critical Vol./Cap.(X): 0.744
Loss Time (sec): 0 (Y+R=4.0 sec) Average Delay (sec/veh): 12.9
Optimal Cycle: 89 Level Of Service: B

Street Name:	French Valley Parkway						Murrieta Hot Springs Road					
Approach:	North Bound			South Bound			East Bound			West Bound		
Movement:	L -	T -	R	L -	T -	R	L -	T -	R	L -	T -	R
Control:	Protected			Protected			Protected			Protected		
Rights:	Ovl			Include			Include			Include		
Min. Green:	0	0	0	0	0	0	0	0	0	0	0	0
Lanes:	1 0	0	0	2	0 0	0 0	0 0	2 1	0	1 0	3 0	0
Volume Module:												
Base Vol:	19	0	829	0	0	0	0	1182	269	805	2004	0
Growth Adj:	1.00	1.00	1.00	1.00	1.00	1.00	1.00	1.00	1.00	1.00	1.00	1.00
Initial Bse:	19	0	829	0	0	0	0	1182	269	805	2004	0
Added Vol:	0	0	0	0	0	0	0	0	0	0	0	0
PasserByVol:	0	0	0	0	0	0	0	0	0	0	0	0
Initial Fut:	19	0	829	0	0	0	0	1182	269	805	2004	0
User Adj:	1.00	1.00	1.00	1.00	1.00	1.00	1.00	1.00	1.00	1.00	1.00	1.00
PHF Adj:	1.00	1.00	1.00	1.00	1.00	1.00	1.00	1.00	1.00	1.00	1.00	1.00
PHF Volume:	19	0	829	0	0	0	0	1182	269	805	2004	0
Reduct Vol:	0	0	0	0	0	0	0	0	0	0	0	0
Reduced Vol:	19	0	829	0	0	0	0	1182	269	805	2004	0
PCE Adj:	1.00	1.00	1.00	1.00	1.00	1.00	1.00	1.00	1.00	1.00	1.00	1.00
MLF Adj:	1.00	1.00	1.00	1.00	1.00	1.00	1.00	1.00	1.00	1.00	1.00	1.00
FinalVolume:	19	0	829	0	0	0	0	1182	269	805	2004	0
Saturation Flow Module:												
Sat/Lane:	1900	1900	1900	1900	1900	1900	1900	1900	1900	1900	1900	1900
Adjustment:	0.95	1.00	0.75	1.00	1.00	1.00	1.00	0.88	0.88	0.95	0.91	1.00
Lanes:	1.00	0.00	2.00	0.00	0.00	0.00	0.00	2.44	0.56	1.00	3.00	0.00
Final Sat.:	1805	0	2842	0	0	0	0	4107	935	1805	5187	0
Capacity Analysis Module:												
Vol/Sat:	0.01	0.00	0.29	0.00	0.00	0.00	0.00	0.29	0.29	0.45	0.39	0.00
Crit Moves:	****							****		****		
Green/Cycle:	0.01	0.00	0.61	0.00	0.00	0.00	0.00	0.39	0.39	0.60	0.99	0.00
Volume/Cap:	0.74	0.00	0.48	0.00	0.00	0.00	0.00	0.74	0.74	0.74	0.39	0.00
Delay/Veh:	124.0	0.0	10.8	0.0	0.0	0.0	0.0	28.0	28.0	17.3	0.1	0.0
User DelAdj:	1.00	1.00	1.00	1.00	1.00	1.00	1.00	1.00	1.00	1.00	1.00	1.00
AdjDel/Veh:	124.0	0.0	10.8	0.0	0.0	0.0	0.0	28.0	28.0	17.3	0.1	0.0
LOS by Move:	F	A	B	A	A	A	A	C	C	B	A	A
HCM2kAvgQ:	2	0	8	0	0	0	0	15	15	19	1	0

Note: Queue reported is the number of cars per lane.

City of Murrieta General Plan
Future Proposed General Plan
AM Peak Hour

Level Of Service Computation Report
2000 HCM Operations Method (Future Volume Alternative)

Intersection #37 Jefferson Avenue & Guava Street

Cycle (sec): 100 Critical Vol./Cap.(X): 0.485
Loss Time (sec): 0 (Y+R=4.0 sec) Average Delay (sec/veh): 9.4
Optimal Cycle: 36 Level Of Service: A

Street Name:	Jefferson Avenue						Guava Street					
Approach:	North Bound			South Bound			East Bound			West Bound		
Movement:	L	T	R	L	T	R	L	T	R	L	T	R
Control:	Protected			Protected			Permitted			Permitted		
Rights:	Include			Include			Include			Include		
Min. Green:	0	0	0	0	0	0	0	0	0	0	0	0
Lanes:	1 0	2 1	0	1 0	2 1	0	1 0	0 1	0	1 0	1 1	0
Volume Module:												
Base Vol:	22	1363	3	7	1420	306	176	108	89	2	32	10
Growth Adj:	1.00	1.00	1.00	1.00	1.00	1.00	1.00	1.00	1.00	1.00	1.00	1.00
Initial Bse:	22	1363	3	7	1420	306	176	108	89	2	32	10
Added Vol:	0	0	0	0	0	0	0	0	0	0	0	0
PasserByVol:	0	0	0	0	0	0	0	0	0	0	0	0
Initial Fut:	22	1363	3	7	1420	306	176	108	89	2	32	10
User Adj:	1.00	1.00	1.00	1.00	1.00	1.00	1.00	1.00	1.00	1.00	1.00	1.00
PHF Adj:	1.00	1.00	1.00	1.00	1.00	1.00	1.00	1.00	1.00	1.00	1.00	1.00
PHF Volume:	22	1363	3	7	1420	306	176	108	89	2	32	10
Reduct Vol:	0	0	0	0	0	0	0	0	0	0	0	0
Reduced Vol:	22	1363	3	7	1420	306	176	108	89	2	32	10
PCE Adj:	1.00	1.00	1.00	1.00	1.00	1.00	1.00	1.00	1.00	1.00	1.00	1.00
MLF Adj:	1.00	1.00	1.00	1.00	1.00	1.00	1.00	1.00	1.00	1.00	1.00	1.00
FinalVolume:	22	1363	3	7	1420	306	176	108	89	2	32	10
Saturation Flow Module:												
Sat/Lane:	1900	1900	1900	1900	1900	1900	1900	1900	1900	1900	1900	1900
Adjustment:	0.95	0.91	0.91	0.95	0.89	0.89	0.71	0.93	0.93	0.40	0.92	0.92
Lanes:	1.00	2.99	0.01	1.00	2.47	0.53	1.00	0.55	0.45	1.00	1.52	0.48
Final Sat.:	1805	5176	11	1805	4152	895	1349	971	800	762	2651	829
Capacity Analysis Module:												
Vol/Sat:	0.01	0.26	0.26	0.00	0.34	0.34	0.13	0.11	0.11	0.00	0.01	0.01
Crit Moves:	****				****		****					
Green/Cycle:	0.03	0.72	0.72	0.01	0.71	0.71	0.27	0.27	0.27	0.27	0.27	0.27
Volume/Cap:	0.48	0.37	0.37	0.37	0.48	0.48	0.48	0.41	0.41	0.01	0.04	0.04
Delay/Veh:	56.0	5.4	5.4	60.6	6.7	6.7	31.7	30.6	30.6	26.8	27.0	27.0
User DelAdj:	1.00	1.00	1.00	1.00	1.00	1.00	1.00	1.00	1.00	1.00	1.00	1.00
AdjDel/Veh:	56.0	5.4	5.4	60.6	6.7	6.7	31.7	30.6	30.6	26.8	27.0	27.0
LOS by Move:	E	A	A	E	A	A	C	C	C	C	C	C
HCM2kAvgQ:	1	6	6	1	9	9	5	5	5	0	1	1

Note: Queue reported is the number of cars per lane.

City of Murrieta General Plan
Future Proposed General Plan
AM Peak Hour

Level Of Service Computation Report
2000 HCM Operations Method (Future Volume Alternative)

Intersection #39 Washington Ave & Calle Del Oso Oro/Nutmeg

Cycle (sec): 100 Critical Vol./Cap.(X): 0.739
Loss Time (sec): 0 (Y+R=4.0 sec) Average Delay (sec/veh): 27.6
Optimal Cycle: 87 Level Of Service: C

Street Name:	Washington Ave						Calle Del Oso Oro/Nutmeg					
Approach:	North Bound			South Bound			East Bound			West Bound		
Movement:	L	T	R	L	T	R	L	T	R	L	T	R
Control:	Protected			Protected			Protected			Protected		
Rights:	Include			Include			Include			Include		
Min. Green:	0	0	0	0	0	0	0	0	0	0	0	0
Lanes:	1 0	2 1	0	1 0	2 1	0	1 0	1 1	0	1 0	1 1	0
Volume Module:												
Base Vol:	262	164	126	88	218	88	64	602	742	151	189	38
Growth Adj:	1.00	1.00	1.00	1.00	1.00	1.00	1.00	1.00	1.00	1.00	1.00	1.00
Initial Bse:	262	164	126	88	218	88	64	602	742	151	189	38
Added Vol:	0	0	0	0	0	0	0	0	0	0	0	0
PasserByVol:	0	0	0	0	0	0	0	0	0	0	0	0
Initial Fut:	262	164	126	88	218	88	64	602	742	151	189	38
User Adj:	1.00	1.00	1.00	1.00	1.00	1.00	1.00	1.00	1.00	1.00	1.00	1.00
PHF Adj:	1.00	1.00	1.00	1.00	1.00	1.00	1.00	1.00	1.00	1.00	1.00	1.00
PHF Volume:	262	164	126	88	218	88	64	602	742	151	189	38
Reduct Vol:	0	0	0	0	0	0	0	0	0	0	0	0
Reduced Vol:	262	164	126	88	218	88	64	602	742	151	189	38
PCE Adj:	1.00	1.00	1.00	1.00	1.00	1.00	1.00	1.00	1.00	1.00	1.00	1.00
MLF Adj:	1.00	1.00	1.00	1.00	1.00	1.00	1.00	1.00	1.00	1.00	1.00	1.00
FinalVolume:	262	164	126	88	218	88	64	602	742	151	189	38
Saturation Flow Module:												
Sat/Lane:	1900	1900	1900	1900	1900	1900	1900	1900	1900	1900	1900	1900
Adjustment:	0.95	0.85	0.85	0.95	0.87	0.87	0.95	0.87	0.87	0.95	0.93	0.93
Lanes:	1.00	2.00	1.00	1.00	2.14	0.86	1.00	1.00	1.00	1.00	1.67	0.33
Final Sat.:	1805	3233	1617	1805	3536	1428	1805	1655	1655	1805	2931	589
Capacity Analysis Module:												
Vol/Sat:	0.15	0.05	0.08	0.05	0.06	0.06	0.04	0.36	0.45	0.08	0.06	0.06
Crit Moves:	****				****				****	****		
Green/Cycle:	0.20	0.17	0.17	0.11	0.08	0.08	0.26	0.61	0.61	0.11	0.46	0.46
Volume/Cap:	0.74	0.29	0.45	0.45	0.74	0.74	0.14	0.60	0.74	0.74	0.14	0.14
Delay/Veh:	45.7	36.3	37.7	43.5	51.7	51.7	28.9	12.6	15.6	56.2	15.4	15.4
User DelAdj:	1.00	1.00	1.00	1.00	1.00	1.00	1.00	1.00	1.00	1.00	1.00	1.00
AdjDel/Veh:	45.7	36.3	37.7	43.5	51.7	51.7	28.9	12.6	15.6	56.2	15.4	15.4
LOS by Move:	D	D	D	D	D	D	C	B	B	E	B	B
HCM2kAvgQ:	9	3	4	3	5	5	2	12	18	6	2	2

Note: Queue reported is the number of cars per lane.

City of Murrieta General Plan
Future Proposed General Plan
AM Peak Hour

Level Of Service Computation Report
2000 HCM Operations Method (Future Volume Alternative)

Intersection #40 Clinton Keith Rd & Calle de Oso Oro/Bear Creek Dr

Cycle (sec): 100 Critical Vol./Cap.(X): 0.944
Loss Time (sec): 0 (Y+R=4.0 sec) Average Delay (sec/veh): 23.7
Optimal Cycle: 180 Level Of Service: C

Street Name:	Clinton Keith Rd						Calle de Oso Oro/Bear Creek Dr					
Approach:	North Bound			South Bound			East Bound			West Bound		
Movement:	L	T	R	L	T	R	L	T	R	L	T	R
Control:	Protected			Protected			Permitted			Permitted		
Rights:	Include			Include			Include			Include		
Min. Green:	0	0	0	0	0	0	0	0	0	0	0	0
Lanes:	1	0	1	1	0	1	0	1	1	0	1	0	0	1	0	1	1	0
Volume Module:												
Base Vol:	63	107	268	4	115	192	269	613	172	420	598	19
Growth Adj:	1.00	1.00	1.00	1.00	1.00	1.00	1.00	1.00	1.00	1.00	1.00	1.00
Initial Bse:	63	107	268	4	115	192	269	613	172	420	598	19
Added Vol:	0	0	0	0	0	0	0	0	0	0	0	0
PasserByVol:	0	0	0	0	0	0	0	0	0	0	0	0
Initial Fut:	63	107	268	4	115	192	269	613	172	420	598	19
User Adj:	1.00	1.00	1.00	1.00	1.00	1.00	1.00	1.00	1.00	1.00	1.00	1.00
PHF Adj:	1.00	1.00	1.00	1.00	1.00	1.00	1.00	1.00	1.00	1.00	1.00	1.00
PHF Volume:	63	107	268	4	115	192	269	613	172	420	598	19
Reduct Vol:	0	0	0	0	0	0	0	0	0	0	0	0
Reduced Vol:	63	107	268	4	115	192	269	613	172	420	598	19
PCE Adj:	1.00	1.00	1.00	1.00	1.00	1.00	1.00	1.00	1.00	1.00	1.00	1.00
MLF Adj:	1.00	1.00	1.00	1.00	1.00	1.00	1.00	1.00	1.00	1.00	1.00	1.00
FinalVolume:	63	107	268	4	115	192	269	613	172	420	598	19
Saturation Flow Module:												
Sat/Lane:	1900	1900	1900	1900	1900	1900	1900	1900	1900	1900	1900	1900
Adjustment:	0.95	0.85	0.85	0.95	0.86	0.86	0.41	0.97	0.97	0.28	0.95	0.95
Lanes:	1.00	1.00	1.00	1.00	1.00	1.00	1.00	0.78	0.22	1.00	1.94	0.06
Final Sat.:	1805	1612	1612	1805	1635	1635	775	1435	403	542	3481	111
Capacity Analysis Module:												
Vol/Sat:	0.03	0.07	0.17	0.00	0.07	0.12	0.35	0.43	0.43	0.78	0.17	0.17
Crit Moves:			****	****						****		
Green/Cycle:	0.04	0.18	0.18	0.00	0.14	0.14	0.82	0.82	0.82	0.82	0.82	0.82
Volume/Cap:	0.85	0.38	0.94	0.94	0.51	0.85	0.42	0.52	0.52	0.94	0.21	0.21
Delay/Veh:	105.6	36.6	71.9	442.9	40.7	59.7	2.9	3.1	3.1	36.0	2.0	2.0
User DelAdj:	1.00	1.00	1.00	1.00	1.00	1.00	1.00	1.00	1.00	1.00	1.00	1.00
AdjDel/Veh:	105.6	36.6	71.9	442.9	40.7	59.7	2.9	3.1	3.1	36.0	2.0	2.0
LOS by Move:	F	D	E	F	D	E	A	A	A	D	A	A
HCM2kAvgQ:	4	3	13	1	4	9	3	8	8	15	2	2

Note: Queue reported is the number of cars per lane.

City of Murrieta General Plan
Future Proposed General Plan
AM Peak Hour

Level Of Service Computation Report
2000 HCM Operations Method (Future Volume Alternative)

Intersection #43 Jefferson Ave & Lemon St

Cycle (sec): 100 Critical Vol./Cap.(X): 0.924
Loss Time (sec): 0 (Y+R=4.0 sec) Average Delay (sec/veh): 28.2
Optimal Cycle: 180 Level Of Service: C

Street Name:	Jefferson Ave						Lemon St					
Approach:	North Bound			South Bound			East Bound			West Bound		
Movement:	L	T	R	L	T	R	L	T	R	L	T	R
Control:	Protected			Protected			Protected			Protected		
Rights:	Include			Include			Include			Include		
Min. Green:	0	0	0	0	0	0	0	0	0	0	0	0
Lanes:	1	0	2	1	0	1	0	2	1	0	1	0	1	0	1	0	0	1	0
Volume Module:												
Base Vol:	320	733	28	4	2585	166	31	3	334	8	13	6
Growth Adj:	1.00	1.00	1.00	1.00	1.00	1.00	1.00	1.00	1.00	1.00	1.00	1.00
Initial Bse:	320	733	28	4	2585	166	31	3	334	8	13	6
Added Vol:	0	0	0	0	0	0	0	0	0	0	0	0
PasserByVol:	0	0	0	0	0	0	0	0	0	0	0	0
Initial Fut:	320	733	28	4	2585	166	31	3	334	8	13	6
User Adj:	1.00	1.00	1.00	1.00	1.00	1.00	1.00	1.00	1.00	1.00	1.00	1.00
PHF Adj:	1.00	1.00	1.00	1.00	1.00	1.00	1.00	1.00	1.00	1.00	1.00	1.00
PHF Volume:	320	733	28	4	2585	166	31	3	334	8	13	6
Reduct Vol:	0	0	0	0	0	0	0	0	0	0	0	0
Reduced Vol:	320	733	28	4	2585	166	31	3	334	8	13	6
PCE Adj:	1.00	1.00	1.00	1.00	1.00	1.00	1.00	1.00	1.00	1.00	1.00	1.00
MLF Adj:	1.00	1.00	1.00	1.00	1.00	1.00	1.00	1.00	1.00	1.00	1.00	1.00
FinalVolume:	320	733	28	4	2585	166	31	3	334	8	13	6
Saturation Flow Module:												
Sat/Lane:	1900	1900	1900	1900	1900	1900	1900	1900	1900	1900	1900	1900
Adjustment:	0.95	0.90	0.90	0.95	0.90	0.90	0.95	1.00	0.85	0.95	0.95	0.95
Lanes:	1.00	2.89	0.11	1.00	2.82	0.18	1.00	1.00	1.00	1.00	0.68	0.32
Final Sat.:	1805	4966	190	1805	4830	310	1805	1900	1615	1805	1239	572
Capacity Analysis Module:												
Vol/Sat:	0.18	0.15	0.15	0.00	0.54	0.54	0.02	0.00	0.21	0.00	0.01	0.01
Crit Moves:	****				****				****	****		
Green/Cycle:	0.19	0.76	0.76	0.01	0.58	0.58	0.14	0.22	0.22	0.00	0.09	0.09
Volume/Cap:	0.92	0.19	0.19	0.19	0.92	0.92	0.12	0.01	0.92	0.92	0.12	0.12
Delay/Veh:	69.3	3.4	3.4	53.6	24.6	24.6	37.7	30.2	66.8	308.5	42.5	42.5
User DelAdj:	1.00	1.00	1.00	1.00	1.00	1.00	1.00	1.00	1.00	1.00	1.00	1.00
AdjDel/Veh:	69.3	3.4	3.4	53.6	24.6	24.6	37.7	30.2	66.8	308.5	42.5	42.5
LOS by Move:	E	A	A	D	C	C	D	C	E	F	D	D
HCM2kAvgQ:	14	2	2	0	32	32	1	0	14	1	1	1

Note: Queue reported is the number of cars per lane.

City of Murrieta General Plan
Future Proposed General Plan
AM Peak Hour

Level Of Service Computation Report
2000 HCM Operations Method (Future Volume Alternative)

Intersection #44 Jefferson Ave & Kalmia St

Cycle (sec): 100 Critical Vol./Cap.(X): 1.090
Loss Time (sec): 0 (Y+R=4.0 sec) Average Delay (sec/veh): 59.3
Optimal Cycle: 180 Level Of Service: E

Street Name:	Jefferson Ave						Kalmia St					
Approach:	North Bound			South Bound			East Bound			West Bound		
Movement:	L -	T -	R	L -	T -	R	L -	T -	R	L -	T -	R
Control:	Protected			Protected			Protected			Protected		
Rights:	Include			Include			Include			Include		
Min. Green:	0	0	0	0	0	0	0	0	0	0	0	0
Lanes:	2 0	3 0	1	1 0	2 1	0	1 0	2 1	0	1 0	1 1	0
Volume Module:												
Base Vol:	261	957	246	967	1732	170	55	502	349	223	355	556
Growth Adj:	1.00	1.00	1.00	1.00	1.00	1.00	1.00	1.00	1.00	1.00	1.00	1.00
Initial Bse:	261	957	246	967	1732	170	55	502	349	223	355	556
Added Vol:	0	0	0	0	0	0	0	0	0	0	0	0
PasserByVol:	0	0	0	0	0	0	0	0	0	0	0	0
Initial Fut:	261	957	246	967	1732	170	55	502	349	223	355	556
User Adj:	1.00	1.00	1.00	1.00	1.00	1.00	1.00	1.00	1.00	1.00	1.00	1.00
PHF Adj:	1.00	1.00	1.00	1.00	1.00	1.00	1.00	1.00	1.00	1.00	1.00	1.00
PHF Volume:	261	957	246	967	1732	170	55	502	349	223	355	556
Reduct Vol:	0	0	0	0	0	0	0	0	0	0	0	0
Reduced Vol:	261	957	246	967	1732	170	55	502	349	223	355	556
PCE Adj:	1.00	1.00	1.00	1.00	1.00	1.00	1.00	1.00	1.00	1.00	1.00	1.00
MLF Adj:	1.00	1.00	1.00	1.00	1.00	1.00	1.00	1.00	1.00	1.00	1.00	1.00
FinalVolume:	261	957	246	967	1732	170	55	502	349	223	355	556
Saturation Flow Module:												
Sat/Lane:	1900	1900	1900	1900	1900	1900	1900	1900	1900	1900	1900	1900
Adjustment:	0.92	0.91	0.85	0.95	0.90	0.90	0.95	0.85	0.85	0.95	0.86	0.86
Lanes:	2.00	3.00	1.00	1.00	2.73	0.27	1.00	2.00	1.00	1.00	1.00	1.00
Final Sat.:	3502	5187	1615	1805	4662	458	1805	3247	1624	1805	1641	1641
Capacity Analysis Module:												
Vol/Sat:	0.07	0.18	0.15	0.54	0.37	0.37	0.03	0.15	0.21	0.12	0.22	0.34
Crit Moves:		****		****			****					****
Green/Cycle:	0.11	0.17	0.17	0.49	0.55	0.55	0.03	0.22	0.22	0.12	0.31	0.31
Volume/Cap:	0.67	1.09	0.90	1.09	0.67	0.67	1.09	0.72	1.00	1.00	0.70	1.09
Delay/Veh:	47.4	99.3	70.5	83.0	16.7	16.7	202.5	38.6	69.7	103.6	31.9	92.8
User DelAdj:	1.00	1.00	1.00	1.00	1.00	1.00	1.00	1.00	1.00	1.00	1.00	1.00
AdjDel/Veh:	47.4	99.3	70.5	83.0	16.7	16.7	202.5	38.6	69.7	103.6	31.9	92.8
LOS by Move:	D	F	E	F	B	B	F	D	E	F	C	F
HCM2kAvgQ:	5	18	11	44	16	16	4	9	18	11	11	28

Note: Queue reported is the number of cars per lane.

City of Murrieta General Plan
Future Proposed General Plan
AM Peak Hour

Level Of Service Computation Report
2000 HCM Operations Method (Future Volume Alternative)

Intersection #45 Jefferson Ave & Juniper St

Cycle (sec): 100 Critical Vol./Cap.(X): 0.801
Loss Time (sec): 0 (Y+R=4.0 sec) Average Delay (sec/veh): 23.4
Optimal Cycle: 115 Level Of Service: C

Street Name:	Jefferson Ave						Juniper St					
Approach:	North Bound			South Bound			East Bound			West Bound		
Movement:	L -	T -	R	L -	T -	R	L -	T -	R	L -	T -	R
Control:	Protected			Protected			Protected			Protected		
Rights:	Include			Include			Include			Include		
Min. Green:	0	0	0	0	0	0	0	0	0	0	0	0
Lanes:	1 0	2 1	0	1 0	2 1	0	1 0	1 1	0	1 0	1 1	0
Volume Module:												
Base Vol:	471	1298	35	71	2027	173	137	99	188	7	101	22
Growth Adj:	1.00	1.00	1.00	1.00	1.00	1.00	1.00	1.00	1.00	1.00	1.00	1.00
Initial Bse:	471	1298	35	71	2027	173	137	99	188	7	101	22
Added Vol:	0	0	0	0	0	0	0	0	0	0	0	0
PasserByVol:	0	0	0	0	0	0	0	0	0	0	0	0
Initial Fut:	471	1298	35	71	2027	173	137	99	188	7	101	22
User Adj:	1.00	1.00	1.00	1.00	1.00	1.00	1.00	1.00	1.00	1.00	1.00	1.00
PHF Adj:	1.00	1.00	1.00	1.00	1.00	1.00	1.00	1.00	1.00	1.00	1.00	1.00
PHF Volume:	471	1298	35	71	2027	173	137	99	188	7	101	22
Reduct Vol:	0	0	0	0	0	0	0	0	0	0	0	0
Reduced Vol:	471	1298	35	71	2027	173	137	99	188	7	101	22
PCE Adj:	1.00	1.00	1.00	1.00	1.00	1.00	1.00	1.00	1.00	1.00	1.00	1.00
MLF Adj:	1.00	1.00	1.00	1.00	1.00	1.00	1.00	1.00	1.00	1.00	1.00	1.00
FinalVolume:	471	1298	35	71	2027	173	137	99	188	7	101	22
Saturation Flow Module:												
Sat/Lane:	1900	1900	1900	1900	1900	1900	1900	1900	1900	1900	1900	1900
Adjustment:	0.95	0.91	0.91	0.95	0.90	0.90	0.95	0.86	0.86	0.95	0.92	0.92
Lanes:	1.00	2.92	0.08	1.00	2.76	0.24	1.00	1.00	1.00	1.00	1.64	0.36
Final Sat.:	1805	5031	136	1805	4722	403	1805	1628	1628	1805	2884	628
Capacity Analysis Module:												
Vol/Sat:	0.26	0.26	0.26	0.04	0.43	0.43	0.08	0.06	0.12	0.00	0.04	0.04
Crit Moves:	****				****		****				****	
Green/Cycle:	0.33	0.75	0.75	0.11	0.54	0.54	0.09	0.13	0.13	0.00	0.04	0.04
Volume/Cap:	0.80	0.35	0.35	0.35	0.80	0.80	0.80	0.45	0.86	0.86	0.80	0.80
Delay/Veh:	38.5	4.3	4.3	41.9	20.6	20.6	67.3	40.4	62.3	279.4	72.5	72.5
User DelAdj:	1.00	1.00	1.00	1.00	1.00	1.00	1.00	1.00	1.00	1.00	1.00	1.00
AdjDel/Veh:	38.5	4.3	4.3	41.9	20.6	20.6	67.3	40.4	62.3	279.4	72.5	72.5
LOS by Move:	D	A	A	D	C	C	E	D	E	F	E	E
HCM2kAvgQ:	15	5	5	2	22	22	6	3	9	1	4	4

Note: Queue reported is the number of cars per lane.

City of Murrieta General Plan
Future Proposed General Plan
AM Peak Hour

Level Of Service Computation Report
2000 HCM Operations Method (Future Volume Alternative)

Intersection #46 Jefferson Ave & Ivy St/Los Alamos Rd

Cycle (sec): 100 | Critical Vol./Cap.(X): 0.705
Loss Time (sec): 0 (Y+R=4.0 sec) | Average Delay (sec/veh): 26.8
Optimal Cycle: 77 | Level Of Service: C

Street Name:	Jefferson Ave						Ivy St/Los Alamos Rd					
Approach:	North Bound			South Bound			East Bound			West Bound		
Movement:	L -	T -	R	L -	T -	R	L -	T -	R	L -	T -	R
Control:	Protected			Protected			Protected			Protected		
Rights:	Include			Include			Include			Include		
Min. Green:	0	0	0	0	0	0	0	0	0	0	0	0
Lanes:	2 0	3 0	1	2 0	3 0	1	1 0	1 1	0	1 0	1 1	0
Volume Module:												
Base Vol:	259	1336	111	327	1823	72	49	95	129	363	121	400
Growth Adj:	1.00	1.00	1.00	1.00	1.00	1.00	1.00	1.00	1.00	1.00	1.00	1.00
Initial Bse:	259	1336	111	327	1823	72	49	95	129	363	121	400
Added Vol:	0	0	0	0	0	0	0	0	0	0	0	0
PasserByVol:	0	0	0	0	0	0	0	0	0	0	0	0
Initial Fut:	259	1336	111	327	1823	72	49	95	129	363	121	400
User Adj:	1.00	1.00	1.00	1.00	1.00	1.00	1.00	1.00	1.00	1.00	1.00	1.00
PHF Adj:	1.00	1.00	1.00	1.00	1.00	1.00	1.00	1.00	1.00	1.00	1.00	1.00
PHF Volume:	259	1336	111	327	1823	72	49	95	129	363	121	400
Reduct Vol:	0	0	0	0	0	0	0	0	0	0	0	0
Reduced Vol:	259	1336	111	327	1823	72	49	95	129	363	121	400
PCE Adj:	1.00	1.00	1.00	1.00	1.00	1.00	1.00	1.00	1.00	1.00	1.00	1.00
MLF Adj:	1.00	1.00	1.00	1.00	1.00	1.00	1.00	1.00	1.00	1.00	1.00	1.00
FinalVolume:	259	1336	111	327	1823	72	49	95	129	363	121	400
Saturation Flow Module:												
Sat/Lane:	1900	1900	1900	1900	1900	1900	1900	1900	1900	1900	1900	1900
Adjustment:	0.92	0.91	0.85	0.92	0.91	0.85	0.95	0.87	0.87	0.95	0.84	0.84
Lanes:	2.00	3.00	1.00	2.00	3.00	1.00	1.00	1.00	1.00	1.00	1.00	1.00
Final Sat.:	3502	5187	1615	3502	5187	1615	1805	1650	1650	1805	1597	1597
Capacity Analysis Module:												
Vol/Sat:	0.07	0.26	0.07	0.09	0.35	0.04	0.03	0.06	0.08	0.20	0.08	0.25
Crit Moves:	****				****				****	****		
Green/Cycle:	0.10	0.44	0.44	0.16	0.50	0.50	0.04	0.11	0.11	0.29	0.36	0.36
Volume/Cap:	0.70	0.58	0.16	0.58	0.70	0.09	0.70	0.52	0.70	0.70	0.21	0.70
Delay/Veh:	49.4	21.3	16.8	40.4	20.3	13.2	74.5	43.1	49.9	36.4	22.4	30.5
User DelAdj:	1.00	1.00	1.00	1.00	1.00	1.00	1.00	1.00	1.00	1.00	1.00	1.00
AdjDel/Veh:	49.4	21.3	16.8	40.4	20.3	13.2	74.5	43.1	49.9	36.4	22.4	30.5
LOS by Move:	D	C	B	D	C	B	E	D	D	D	C	C
HCM2kAvgQ:	5	12	2	6	17	1	3	4	6	11	3	12

Note: Queue reported is the number of cars per lane.

City of Murrieta General Plan
Future Proposed General Plan
AM Peak Hour

Level Of Service Computation Report
2000 HCM Operations Method (Future Volume Alternative)

Intersection #48 Madison Ave/I-15 SB Ramps & Kalmia St

Cycle (sec): 100 | Critical Vol./Cap.(X): 0.569
Loss Time (sec): 0 (Y+R=4.0 sec) | Average Delay (sec/veh): 29.4
Optimal Cycle: 53 | Level Of Service: C

Street Name:	Madison Ave/I-15 SB Ramps						Kalmia St					
Approach:	North Bound			South Bound			East Bound			West Bound		
Movement:	L -	T -	R	L -	T -	R	L -	T -	R	L -	T -	R
Control:	Protected			Protected			Protected			Protected		
Rights:	Include			Include			Include			Include		
Min. Green:	0	0	0	0	0	0	0	0	0	0	0	0
Lanes:	2 0	0 0	2	2 0	1 1	0	0 0	3 1	0	2 0	2 1	1
Volume Module:												
Base Vol:	119	0	219	250	51	272	0	1459	245	386	1139	505
Growth Adj:	1.00	1.00	1.00	1.00	1.00	1.00	1.00	1.00	1.00	1.00	1.00	1.00
Initial Bse:	119	0	219	250	51	272	0	1459	245	386	1139	505
Added Vol:	0	0	0	0	0	0	0	0	0	0	0	0
PasserByVol:	0	0	0	0	0	0	0	0	0	0	0	0
Initial Fut:	119	0	219	250	51	272	0	1459	245	386	1139	505
User Adj:	1.00	1.00	1.00	1.00	1.00	1.00	1.00	1.00	1.00	1.00	1.00	1.00
PHF Adj:	1.00	1.00	1.00	1.00	1.00	1.00	1.00	1.00	1.00	1.00	1.00	1.00
PHF Volume:	119	0	219	250	51	272	0	1459	245	386	1139	505
Reduct Vol:	0	0	0	0	0	0	0	0	0	0	0	0
Reduced Vol:	119	0	219	250	51	272	0	1459	245	386	1139	505
PCE Adj:	1.00	1.00	1.00	1.00	1.00	1.00	1.00	1.00	1.00	1.00	1.00	1.00
MLF Adj:	1.00	1.00	1.00	1.00	1.00	1.00	1.00	1.00	1.00	1.00	1.00	1.00
FinalVolume:	119	0	219	250	51	272	0	1459	245	386	1139	505
Saturation Flow Module:												
Sat/Lane:	1900	1900	1900	1900	1900	1900	1900	1900	1900	1900	1900	1900
Adjustment:	0.92	1.00	0.75	0.92	0.83	0.83	1.00	0.89	0.89	0.92	0.87	0.87
Lanes:	2.00	0.00	2.00	2.00	1.00	1.00	0.00	3.42	0.58	2.00	2.77	1.23
Final Sat.:	3502	0	2842	3502	1578	1578	0	5791	973	3502	4571	2027
Capacity Analysis Module:												
Vol/Sat:	0.03	0.00	0.08	0.07	0.03	0.17	0.00	0.25	0.25	0.11	0.25	0.25
Crit Moves:	****					****		****		****		
Green/Cycle:	0.06	0.00	0.06	0.17	0.30	0.30	0.00	0.44	0.44	0.19	0.64	0.64
Volume/Cap:	0.57	0.00	1.29	0.41	0.11	0.57	0.00	0.57	0.57	0.57	0.39	0.39
Delay/Veh:	49.4	0.0	213.9	37.1	25.1	30.7	0.0	21.0	21.0	37.7	8.8	8.8
User DelAdj:	1.00	1.00	1.00	1.00	1.00	1.00	1.00	1.00	1.00	1.00	1.00	1.00
AdjDel/Veh:	49.4	0.0	213.9	37.1	25.1	30.7	0.0	21.0	21.0	37.7	8.8	8.8
LOS by Move:	D	A	F	D	C	C	A	C	C	D	A	A
HCM2kAvgQ:	3	0	10	4	1	8	0	11	11	6	7	7

Note: Queue reported is the number of cars per lane.

City of Murrieta General Plan
Future Proposed General Plan
AM Peak Hour

Level Of Service Computation Report
2000 HCM Operations Method (Future Volume Alternative)

Intersection #50 Hancock Ave & Murrieta Hot Springs Rd

Cycle (sec): 100 Critical Vol./Cap.(X): 0.778
Loss Time (sec): 0 (Y+R=4.0 sec) Average Delay (sec/veh): 17.6
Optimal Cycle: 103 Level Of Service: B

Street Name:	Hancock Ave						Murrieta Hot Springs Rd					
Approach:	North Bound			South Bound			East Bound			West Bound		
Movement:	L	T	R	L	T	R	L	T	R	L	T	R
Control:	Protected			Protected			Protected			Protected		
Rights:	Include			Ovl			Include			Include		
Min. Green:	0	0	0	0	0	0	0	0	0	0	0	0
Lanes:	0	0	0	0	0	2	0	0	0	2	0	4
Volume Module:												
Base Vol:	0	0	0	379	0	598	697	1520	0	0	2602	566
Growth Adj:	1.00	1.00	1.00	1.00	1.00	1.00	1.00	1.00	1.00	1.00	1.00	1.00
Initial Bse:	0	0	0	379	0	598	697	1520	0	0	2602	566
Added Vol:	0	0	0	0	0	0	0	0	0	0	0	0
PasserByVol:	0	0	0	0	0	0	0	0	0	0	0	0
Initial Fut:	0	0	0	379	0	598	697	1520	0	0	2602	566
User Adj:	1.00	1.00	1.00	1.00	1.00	1.00	1.00	1.00	1.00	1.00	1.00	1.00
PHF Adj:	1.00	1.00	1.00	1.00	1.00	1.00	1.00	1.00	1.00	1.00	1.00	1.00
PHF Volume:	0	0	0	379	0	598	697	1520	0	0	2602	566
Reduct Vol:	0	0	0	0	0	0	0	0	0	0	0	0
Reduced Vol:	0	0	0	379	0	598	697	1520	0	0	2602	566
PCE Adj:	1.00	1.00	1.00	1.00	1.00	1.00	1.00	1.00	1.00	1.00	1.00	1.00
MLF Adj:	1.00	1.00	1.00	1.00	1.00	1.00	1.00	1.00	1.00	1.00	1.00	1.00
FinalVolume:	0	0	0	379	0	598	697	1520	0	0	2602	566
Saturation Flow Module:												
Sat/Lane:	1900	1900	1900	1900	1900	1900	1900	1900	1900	1900	1900	1900
Adjustment:	1.00	1.00	1.00	0.92	1.00	0.75	0.92	0.91	1.00	1.00	0.89	0.89
Lanes:	0.00	0.00	0.00	2.00	0.00	2.00	2.00	4.00	0.00	0.00	3.29	0.71
Final Sat.:	0	0	0	3502	0	2842	3502	6916	0	0	5527	1202
Capacity Analysis Module:												
Vol/Sat:	0.00	0.00	0.00	0.11	0.00	0.21	0.20	0.22	0.00	0.00	0.47	0.47
Crit Moves:				****			****				****	
Green/Cycle:	0.00	0.00	0.00	0.14	0.00	0.39	0.26	0.86	0.00	0.00	0.61	0.61
Volume/Cap:	0.00	0.00	0.00	0.78	0.00	0.53	0.78	0.26	0.00	0.00	0.78	0.78
Delay/Veh:	0.0	0.0	0.0	49.4	0.0	23.7	39.0	1.3	0.0	0.0	15.7	15.7
User DelAdj:	1.00	1.00	1.00	1.00	1.00	1.00	1.00	1.00	1.00	1.00	1.00	1.00
AdjDel/Veh:	0.0	0.0	0.0	49.4	0.0	23.7	39.0	1.3	0.0	0.0	15.7	15.7
LOS by Move:	A	A	A	D	A	C	D	A	A	A	B	B
HCM2kAvgQ:	0	0	0	8	0	8	12	2	0	0	21	21

Note: Queue reported is the number of cars per lane.

City of Murrieta General Plan
Future Proposed General Plan
AM Peak Hour

Level Of Service Computation Report
2000 HCM Operations Method (Future Volume Alternative)

Intersection #51 Alta Murrieta Dr & Murrieta Hot Springs Rd

Cycle (sec): 100 Critical Vol./Cap.(X): 0.601
Loss Time (sec): 0 (Y+R=4.0 sec) Average Delay (sec/veh): 23.8
Optimal Cycle: 57 Level Of Service: C

Street Name:	Alta Murrieta Dr						Murrieta Hot Springs Rd					
Approach:	North Bound			South Bound			East Bound			West Bound		
Movement:	L	T	R	L	T	R	L	T	R	L	T	R
Control:	Protected			Protected			Protected			Protected		
Rights:	Include			Include			Include			Ovl		
Min. Green:	0	0	0	0	0	0	0	0	0	0	0	0
Lanes:	2	0	1	0	1	2	0	1	1	0	2	0
Volume Module:												
Base Vol:	221	82	19	69	130	313	258	982	282	131	1871	169
Growth Adj:	1.00	1.00	1.00	1.00	1.00	1.00	1.00	1.00	1.00	1.00	1.00	1.00
Initial Bse:	221	82	19	69	130	313	258	982	282	131	1871	169
Added Vol:	0	0	0	0	0	0	0	0	0	0	0	0
PasserByVol:	0	0	0	0	0	0	0	0	0	0	0	0
Initial Fut:	221	82	19	69	130	313	258	982	282	131	1871	169
User Adj:	1.00	1.00	1.00	1.00	1.00	1.00	1.00	1.00	1.00	1.00	1.00	1.00
PHF Adj:	1.00	1.00	1.00	1.00	1.00	1.00	1.00	1.00	1.00	1.00	1.00	1.00
PHF Volume:	221	82	19	69	130	313	258	982	282	131	1871	169
Reduct Vol:	0	0	0	0	0	0	0	0	0	0	0	0
Reduced Vol:	221	82	19	69	130	313	258	982	282	131	1871	169
PCE Adj:	1.00	1.00	1.00	1.00	1.00	1.00	1.00	1.00	1.00	1.00	1.00	1.00
MLF Adj:	1.00	1.00	1.00	1.00	1.00	1.00	1.00	1.00	1.00	1.00	1.00	1.00
FinalVolume:	221	82	19	69	130	313	258	982	282	131	1871	169
Saturation Flow Module:												
Sat/Lane:	1900	1900	1900	1900	1900	1900	1900	1900	1900	1900	1900	1900
Adjustment:	0.92	1.00	0.85	0.92	0.85	0.85	0.92	0.88	0.88	0.92	0.91	0.85
Lanes:	2.00	1.00	1.00	2.00	1.00	1.00	2.00	2.33	0.67	2.00	4.00	1.00
Final Sat.:	3502	1900	1615	3502	1614	1614	3502	3897	1119	3502	6916	1615
Capacity Analysis Module:												
Vol/Sat:	0.06	0.04	0.01	0.02	0.08	0.19	0.07	0.25	0.25	0.04	0.27	0.10
Crit Moves:	****					****	****				****	
Green/Cycle:	0.10	0.29	0.29	0.13	0.32	0.32	0.12	0.50	0.50	0.07	0.45	0.58
Volume/Cap:	0.60	0.15	0.04	0.15	0.25	0.60	0.60	0.51	0.51	0.51	0.60	0.18
Delay/Veh:	45.5	26.2	25.3	38.4	25.0	29.9	43.9	17.0	17.0	46.2	21.1	9.8
User DelAdj:	1.00	1.00	1.00	1.00	1.00	1.00	1.00	1.00	1.00	1.00	1.00	1.00
AdjDel/Veh:	45.5	26.2	25.3	38.4	25.0	29.9	43.9	17.0	17.0	46.2	21.1	9.8
LOS by Move:	D	C	C	D	C	C	D	B	B	D	C	A
HCM2kAvgQ:	4	2	0	1	3	9	5	10	10	3	12	2

Note: Queue reported is the number of cars per lane.

City of Murrieta General Plan
Future Proposed General Plan
AM Peak Hour

Level Of Service Computation Report
2000 HCM Operations Method (Future Volume Alternative)

Intersection #52 Winchester Road - SR-79 & Murrieta Hot Springs Rd

Cycle (sec): 100 | Critical Vol./Cap.(X): 1.376
Loss Time (sec): 0 (Y+R=4.0 sec) | Average Delay (sec/veh): 107.8
Optimal Cycle: 180 | Level Of Service: F

Street Name:	Winchester Road - SR-79						Murrieta Hot Springs Rd					
Approach:	North Bound			South Bound			East Bound			West Bound		
Movement:	L -	T -	R	L -	T -	R	L -	T -	R	L -	T -	R
Control:	Protected			Protected			Protected			Protected		
Rights:	Ovl			Include			Include			Include		
Min. Green:	0	0	0	0	0	0	0	0	0	0	0	0
Lanes:	2 0	3 0	1	2 0	3 0	1	2 0	3 0	1	2 0	2 1	0
Volume Module:												
Base Vol:	288	1507	155	161	1461	1426	768	265	95	276	897	83
Growth Adj:	1.00	1.00	1.00	1.00	1.00	1.00	1.00	1.00	1.00	1.00	1.00	1.00
Initial Bse:	288	1507	155	161	1461	1426	768	265	95	276	897	83
Added Vol:	0	0	0	0	0	0	0	0	0	0	0	0
PasserByVol:	0	0	0	0	0	0	0	0	0	0	0	0
Initial Fut:	288	1507	155	161	1461	1426	768	265	95	276	897	83
User Adj:	1.00	1.00	1.00	1.00	1.00	1.00	1.00	1.00	1.00	1.00	1.00	1.00
PHF Adj:	1.00	1.00	1.00	1.00	1.00	1.00	1.00	1.00	1.00	1.00	1.00	1.00
PHF Volume:	288	1507	155	161	1461	1426	768	265	95	276	897	83
Reduct Vol:	0	0	0	0	0	0	0	0	0	0	0	0
Reduced Vol:	288	1507	155	161	1461	1426	768	265	95	276	897	83
PCE Adj:	1.00	1.00	1.00	1.00	1.00	1.00	1.00	1.00	1.00	1.00	1.00	1.00
MLF Adj:	1.00	1.00	1.00	1.00	1.00	1.00	1.00	1.00	1.00	1.00	1.00	1.00
FinalVolume:	288	1507	155	161	1461	1426	768	265	95	276	897	83
Saturation Flow Module:												
Sat/Lane:	1900	1900	1900	1900	1900	1900	1900	1900	1900	1900	1900	1900
Adjustment:	0.92	0.91	0.85	0.92	0.91	0.85	0.92	0.91	0.85	0.92	0.90	0.90
Lanes:	2.00	3.00	1.00	2.00	3.00	1.00	2.00	3.00	1.00	2.00	2.75	0.25
Final Sat.:	3502	5187	1615	3502	5187	1615	3502	5187	1615	3502	4686	434
Capacity Analysis Module:												
Vol/Sat:	0.08	0.29	0.10	0.05	0.28	0.88	0.22	0.05	0.06	0.08	0.19	0.19
Crit Moves:	****					****	****				****	
Green/Cycle:	0.06	0.61	0.78	0.10	0.64	0.64	0.16	0.13	0.13	0.17	0.14	0.14
Volume/Cap:	1.38	0.48	0.12	0.48	0.44	1.38	1.38	0.40	0.46	0.46	1.38	1.38
Delay/Veh:	243.3	11.1	2.8	43.9	9.0	193.2	222.3	40.5	42.1	37.9	221	221.0
User DelAdj:	1.00	1.00	1.00	1.00	1.00	1.00	1.00	1.00	1.00	1.00	1.00	1.00
AdjDel/Veh:	243.3	11.1	2.8	43.9	9.0	193.2	222.3	40.5	42.1	37.9	221	221.0
LOS by Move:	F	B	A	D	A	F	F	D	D	D	F	F
HCM2kAvgQ:	12	9	1	3	8	92	28	3	3	4	25	25

Note: Queue reported is the number of cars per lane.

City of Murrieta General Plan
Future Proposed General Plan
AM Peak Hour

Level Of Service Computation Report
2000 HCM Operations Method (Future Volume Alternative)

Intersection #53 Hancock Ave & Los Alamos Rd

Cycle (sec): 100 | Critical Vol./Cap.(X): 1.161
Loss Time (sec): 0 (Y+R=4.0 sec) | Average Delay (sec/veh): 84.6
Optimal Cycle: 180 | Level Of Service: F

Street Name:	Hancock Ave						Los Alamos Rd					
Approach:	North Bound			South Bound			East Bound			West Bound		
Movement:	L -	T -	R	L -	T -	R	L -	T -	R	L -	T -	R
Control:	Protected			Protected			Protected			Protected		
Rights:	Include			Include			Include			Include		
Min. Green:	0	0	0	0	0	0	0	0	0	0	0	0
Lanes:	1 0	1 1	0	2 0	0 1	0	1 0	1 1	0	1 0	1 1	0
Volume Module:												
Base Vol:	48	120	221	793	252	93	71	969	72	916	1682	614
Growth Adj:	1.00	1.00	1.00	1.00	1.00	1.00	1.00	1.00	1.00	1.00	1.00	1.00
Initial Bse:	48	120	221	793	252	93	71	969	72	916	1682	614
Added Vol:	0	0	0	0	0	0	0	0	0	0	0	0
PasserByVol:	0	0	0	0	0	0	0	0	0	0	0	0
Initial Fut:	48	120	221	793	252	93	71	969	72	916	1682	614
User Adj:	1.00	1.00	1.00	1.00	1.00	1.00	1.00	1.00	1.00	1.00	1.00	1.00
PHF Adj:	1.00	1.00	1.00	1.00	1.00	1.00	1.00	1.00	1.00	1.00	1.00	1.00
PHF Volume:	48	120	221	793	252	93	71	969	72	916	1682	614
Reduct Vol:	0	0	0	0	0	0	0	0	0	0	0	0
Reduced Vol:	48	120	221	793	252	93	71	969	72	916	1682	614
PCE Adj:	1.00	1.00	1.00	1.00	1.00	1.00	1.00	1.00	1.00	1.00	1.00	1.00
MLF Adj:	1.00	1.00	1.00	1.00	1.00	1.00	1.00	1.00	1.00	1.00	1.00	1.00
FinalVolume:	48	120	221	793	252	93	71	969	72	916	1682	614
Saturation Flow Module:												
Sat/Lane:	1900	1900	1900	1900	1900	1900	1900	1900	1900	1900	1900	1900
Adjustment:	0.95	0.86	0.86	0.92	0.96	0.96	0.95	0.94	0.94	0.95	0.91	0.91
Lanes:	1.00	1.00	1.00	2.00	0.73	0.27	1.00	1.86	0.14	1.00	1.47	0.53
Final Sat.:	1805	1630	1630	3502	1332	492	1805	3327	247	1805	2539	927
Capacity Analysis Module:												
Vol/Sat:	0.03	0.07	0.14	0.23	0.19	0.19	0.04	0.29	0.29	0.51	0.66	0.66
Crit Moves:			****	****				****		****		
Green/Cycle:	0.04	0.12	0.12	0.20	0.27	0.27	0.04	0.25	0.25	0.44	0.65	0.65
Volume/Cap:	0.69	0.63	1.16	1.16	0.69	0.69	1.02	1.16	1.16	1.16	1.02	1.02
Delay/Veh:	73.3	44.5	147.5	128.2	36.7	36.7	161.6	122	122.2	114.3	41.7	41.7
User DelAdj:	1.00	1.00	1.00	1.00	1.00	1.00	1.00	1.00	1.00	1.00	1.00	1.00
AdjDel/Veh:	73.3	44.5	147.5	128.2	36.7	36.7	161.6	122	122.2	114.3	41.7	41.7
LOS by Move:	E	D	F	F	D	D	F	F	F	F	D	D
HCM2kAvgQ:	3	5	14	23	11	11	5	30	30	47	47	47

Note: Queue reported is the number of cars per lane.

City of Murrieta General Plan
Future Proposed General Plan
AM Peak Hour

Level Of Service Computation Report
2000 HCM Operations Method (Future Volume Alternative)

Intersection #54 I-215 SB Ramps & Los Alamos Rd

Cycle (sec): 100 Critical Vol./Cap.(X): 1.129
Loss Time (sec): 0 (Y+R=4.0 sec) Average Delay (sec/veh): 77.2
Optimal Cycle: 180 Level Of Service: E

Street Name:	I-215 SB Ramps									Los Alamos Rd					
Approach:	North Bound			South Bound			East Bound			West Bound					
Movement:	L	T	R	L	T	R	L	T	R	L	T	R	L	T	R
Control:	Protected			Protected			Protected			Protected					
Rights:	Include			Include			Include			Include					
Min. Green:	0	0	0	0	0	0	0	0	0	0	0	0			
Lanes:	0	0	0	0	0	1	0	1!	0	1	0	0	2	0	1	2	0	2	0	0	
Volume Module:															
Base Vol:	0	0	0	405	0	2037	0	1419	478	220	1506	0			
Growth Adj:	1.00	1.00	1.00	1.00	1.00	1.00	1.00	1.00	1.00	1.00	1.00	1.00			
Initial Bse:	0	0	0	405	0	2037	0	1419	478	220	1506	0			
Added Vol:	0	0	0	0	0	0	0	0	0	0	0	0			
PasserByVol:	0	0	0	0	0	0	0	0	0	0	0	0			
Initial Fut:	0	0	0	405	0	2037	0	1419	478	220	1506	0			
User Adj:	1.00	1.00	1.00	1.00	1.00	1.00	1.00	1.00	1.00	1.00	1.00	1.00			
PHF Adj:	1.00	1.00	1.00	1.00	1.00	1.00	1.00	1.00	1.00	1.00	1.00	1.00			
PHF Volume:	0	0	0	405	0	2037	0	1419	478	220	1506	0			
Reduct Vol:	0	0	0	0	0	0	0	0	0	0	0	0			
Reduced Vol:	0	0	0	405	0	2037	0	1419	478	220	1506	0			
PCE Adj:	1.00	1.00	1.00	1.00	1.00	1.00	1.00	1.00	1.00	1.00	1.00	1.00			
MLF Adj:	1.00	1.00	1.00	1.00	1.00	1.00	1.00	1.00	1.00	1.00	1.00	1.00			
FinalVolume:	0	0	0	405	0	2037	0	1419	478	220	1506	0			
Saturation Flow Module:															
Sat/Lane:	1900	1900	1900	1900	1900	1900	1900	1900	1900	1900	1900	1900			
Adjustment:	1.00	1.00	1.00	0.87	1.00	0.87	1.00	0.95	0.85	0.92	0.95	1.00			
Lanes:	0.00	0.00	0.00	1.17	0.00	1.83	0.00	2.00	1.00	2.00	2.00	0.00			
Final Sat.:	0	0	0	1923	0	3025	0	3610	1615	3502	3610	0			
Capacity Analysis Module:															
Vol/Sat:	0.00	0.00	0.00	0.21	0.00	0.67	0.00	0.39	0.30	0.06	0.42	0.00			
Crit Moves:						****		****		****					
Green/Cycle:	0.00	0.00	0.00	0.60	0.00	0.60	0.00	0.35	0.35	0.06	0.40	0.00			
Volume/Cap:	0.00	0.00	0.00	0.35	0.00	1.13	0.00	1.13	0.85	1.13	1.03	0.00			
Delay/Veh:	0.0	0.0	0.0	10.4	0.0	84.9	0.0	101	42.0	150.8	62.4	0.0			
User DelAdj:	1.00	1.00	1.00	1.00	1.00	1.00	1.00	1.00	1.00	1.00	1.00	1.00			
AdjDel/Veh:	0.0	0.0	0.0	10.4	0.0	84.9	0.0	101	42.0	150.8	62.4	0.0			
LOS by Move:	A	A	A	B	A	F	A	F	D	F	E	A			
HCM2kAvgQ:	0	0	0	5	0	53	0	37	16	8	34	0			

Note: Queue reported is the number of cars per lane.

City of Murrieta General Plan
Future Proposed General Plan
AM Peak Hour

Level Of Service Computation Report
2000 HCM Operations Method (Future Volume Alternative)

Intersection #55 I-215 NB Ramps & Los Alamos Rd

Cycle (sec): 100 Critical Vol./Cap.(X): 0.802
Loss Time (sec): 0 (Y+R=4.0 sec) Average Delay (sec/veh): 25.5
Optimal Cycle: 115 Level Of Service: C

Street Name:	I-215 NB Ramps									Los Alamos Rd					
Approach:	North Bound			South Bound			East Bound			West Bound					
Movement:	L	T	R	L	T	R	L	T	R	L	T	R	L	T	R
Control:	Protected			Protected			Protected			Protected					
Rights:	Include			Include			Include			Include					
Min. Green:	0	0	0	0	0	0	0	0	0	0	0	0			
Lanes:	1	0	0	0	1	0	0	0	0	0	2	0	3	0	0	0	0	2	0	1	
Volume Module:															
Base Vol:	550	0	377	0	0	0	591	1233	0	0	1185	160			
Growth Adj:	1.00	1.00	1.00	1.00	1.00	1.00	1.00	1.00	1.00	1.00	1.00	1.00			
Initial Bse:	550	0	377	0	0	0	591	1233	0	0	1185	160			
Added Vol:	0	0	0	0	0	0	0	0	0	0	0	0			
PasserByVol:	0	0	0	0	0	0	0	0	0	0	0	0			
Initial Fut:	550	0	377	0	0	0	591	1233	0	0	1185	160			
User Adj:	1.00	1.00	1.00	1.00	1.00	1.00	1.00	1.00	1.00	1.00	1.00	1.00			
PHF Adj:	1.00	1.00	1.00	1.00	1.00	1.00	1.00	1.00	1.00	1.00	1.00	1.00			
PHF Volume:	550	0	377	0	0	0	591	1233	0	0	1185	160			
Reduct Vol:	0	0	0	0	0	0	0	0	0	0	0	0			
Reduced Vol:	550	0	377	0	0	0	591	1233	0	0	1185	160			
PCE Adj:	1.00	1.00	1.00	1.00	1.00	1.00	1.00	1.00	1.00	1.00	1.00	1.00			
MLF Adj:	1.00	1.00	1.00	1.00	1.00	1.00	1.00	1.00	1.00	1.00	1.00	1.00			
FinalVolume:	550	0	377	0	0	0	591	1233	0	0	1185	160			
Saturation Flow Module:															
Sat/Lane:	1900	1900	1900	1900	1900	1900	1900	1900	1900	1900	1900	1900			
Adjustment:	0.95	1.00	0.85	1.00	1.00	1.00	0.92	0.91	1.00	1.00	0.95	0.85			
Lanes:	1.00	0.00	1.00	0.00	0.00	0.00	2.00	3.00	0.00	0.00	2.00	1.00			
Final Sat.:	1805	0	1615	0	0	0	3502	5187	0	0	3610	1615			
Capacity Analysis Module:															
Vol/Sat:	0.30	0.00	0.23	0.00	0.00	0.00	0.17	0.24	0.00	0.00	0.33	0.10			
Crit Moves:	****						****				****				
Green/Cycle:	0.38	0.00	0.38	0.00	0.00	0.00	0.21	0.62	0.00	0.00	0.41	0.41			
Volume/Cap:	0.80	0.00	0.61	0.00	0.00	0.00	0.80	0.38	0.00	0.00	0.80	0.24			
Delay/Veh:	34.4	0.0	26.9	0.0	0.0	0.0	43.8	9.6	0.0	0.0	29.2	19.5			
User DelAdj:	1.00	1.00	1.00	1.00	1.00	1.00	1.00	1.00	1.00	1.00	1.00	1.00			
AdjDel/Veh:	34.4	0.0	26.9	0.0	0.0	0.0	43.8	9.6	0.0	0.0	29.2	19.5			
LOS by Move:	C	A	C	A	A	A	D	A	A	A	C	B			
HCM2kAvgQ:	17	0	10	0	0	0	11	7	0	0	19	3			

Note: Queue reported is the number of cars per lane.

City of Murrieta General Plan
Future Proposed General Plan
AM Peak Hour

Level Of Service Computation Report
2000 HCM Operations Method (Future Volume Alternative)

Intersection #56 Whitewood Rd & Los Alamos Rd

Cycle (sec): 100 Critical Vol./Cap.(X): 0.962
Loss Time (sec): 0 (Y+R=4.0 sec) Average Delay (sec/veh): 44.4
Optimal Cycle: 180 Level Of Service: D

Street Name:	Whitewood Rd						Los Alamos Rd					
Approach:	North Bound			South Bound			East Bound			West Bound		
Movement:	L	T	R	L	T	R	L	T	R	L	T	R
Control:	Protected			Protected			Protected			Protected		
Rights:	Include			Include			Include			Include		
Min. Green:	0	0	0	0	0	0	0	0	0	0	0	0
Lanes:	1	0 1	1 0	1	0 2	0 1	1	0 2	0 1	1	0 1	1 0
Volume Module:												
Base Vol:	83	372	38	26	432	617	823	232	109	48	241	34
Growth Adj:	1.00	1.00	1.00	1.00	1.00	1.00	1.00	1.00	1.00	1.00	1.00	1.00
Initial Bse:	83	372	38	26	432	617	823	232	109	48	241	34
Added Vol:	0	0	0	0	0	0	0	0	0	0	0	0
PasserByVol:	0	0	0	0	0	0	0	0	0	0	0	0
Initial Fut:	83	372	38	26	432	617	823	232	109	48	241	34
User Adj:	1.00	1.00	1.00	1.00	1.00	1.00	1.00	1.00	1.00	1.00	1.00	1.00
PHF Adj:	1.00	1.00	1.00	1.00	1.00	1.00	1.00	1.00	1.00	1.00	1.00	1.00
PHF Volume:	83	372	38	26	432	617	823	232	109	48	241	34
Reduct Vol:	0	0	0	0	0	0	0	0	0	0	0	0
Reduced Vol:	83	372	38	26	432	617	823	232	109	48	241	34
PCE Adj:	1.00	1.00	1.00	1.00	1.00	1.00	1.00	1.00	1.00	1.00	1.00	1.00
MLF Adj:	1.00	1.00	1.00	1.00	1.00	1.00	1.00	1.00	1.00	1.00	1.00	1.00
FinalVolume:	83	372	38	26	432	617	823	232	109	48	241	34
Saturation Flow Module:												
Sat/Lane:	1900	1900	1900	1900	1900	1900	1900	1900	1900	1900	1900	1900
Adjustment:	0.95	0.94	0.94	0.95	0.95	0.85	0.95	0.95	0.85	0.95	0.93	0.93
Lanes:	1.00	1.81	0.19	1.00	2.00	1.00	1.00	2.00	1.00	1.00	1.75	0.25
Final Sat.:	1805	3230	330	1805	3610	1615	1805	3610	1615	1805	3104	438
Capacity Analysis Module:												
Vol/Sat:	0.05	0.12	0.12	0.01	0.12	0.38	0.46	0.06	0.07	0.03	0.08	0.08
Crit Moves:	****					****	****				****	
Green/Cycle:	0.05	0.40	0.40	0.05	0.40	0.40	0.47	0.40	0.40	0.16	0.08	0.08
Volume/Cap:	0.96	0.29	0.29	0.29	0.30	0.96	0.96	0.16	0.17	0.17	0.96	0.96
Delay/Veh:	131.3	20.8	20.8	47.6	20.8	55.6	47.3	19.4	19.6	36.8	88.5	88.5
User DelAdj:	1.00	1.00	1.00	1.00	1.00	1.00	1.00	1.00	1.00	1.00	1.00	1.00
AdjDel/Veh:	131.3	20.8	20.8	47.6	20.8	55.6	47.3	19.4	19.6	36.8	88.5	88.5
LOS by Move:	F	C	C	D	C	E	D	B	B	D	F	F
HCM2kAvgQ:	5	5	5	1	5	24	30	2	2	1	8	8

Note: Queue reported is the number of cars per lane.

City of Murrieta General Plan
Future Proposed General Plan
AM Peak Hour

Level Of Service Computation Report
2000 HCM Operations Method (Future Volume Alternative)

Intersection #57 Whitewood Rd & Murrieta Hot Springs Rd

Cycle (sec): 100 Critical Vol./Cap.(X): 0.795
Loss Time (sec): 0 (Y+R=4.0 sec) Average Delay (sec/veh): 28.3
Optimal Cycle: 111 Level Of Service: C

Street Name:	Whitewood Rd						Murrieta Hot Springs Rd					
Approach:	North Bound			South Bound			East Bound			West Bound		
Movement:	L	T	R	L	T	R	L	T	R	L	T	R
Control:	Protected			Protected			Protected			Protected		
Rights:	Include			Include			Include			Include		
Min. Green:	0	0	0	0	0	0	0	0	0	0	0	0
Lanes:	1	0 1	1 0	1	0 1	1 0	1	0 2	1 0	1	0 2	1 0
Volume Module:												
Base Vol:	50	240	241	260	536	102	32	1001	132	514	2105	166
Growth Adj:	1.00	1.00	1.00	1.00	1.00	1.00	1.00	1.00	1.00	1.00	1.00	1.00
Initial Bse:	50	240	241	260	536	102	32	1001	132	514	2105	166
Added Vol:	0	0	0	0	0	0	0	0	0	0	0	0
PasserByVol:	0	0	0	0	0	0	0	0	0	0	0	0
Initial Fut:	50	240	241	260	536	102	32	1001	132	514	2105	166
User Adj:	1.00	1.00	1.00	1.00	1.00	1.00	1.00	1.00	1.00	1.00	1.00	1.00
PHF Adj:	1.00	1.00	1.00	1.00	1.00	1.00	1.00	1.00	1.00	1.00	1.00	1.00
PHF Volume:	50	240	241	260	536	102	32	1001	132	514	2105	166
Reduct Vol:	0	0	0	0	0	0	0	0	0	0	0	0
Reduced Vol:	50	240	241	260	536	102	32	1001	132	514	2105	166
PCE Adj:	1.00	1.00	1.00	1.00	1.00	1.00	1.00	1.00	1.00	1.00	1.00	1.00
MLF Adj:	1.00	1.00	1.00	1.00	1.00	1.00	1.00	1.00	1.00	1.00	1.00	1.00
FinalVolume:	50	240	241	260	536	102	32	1001	132	514	2105	166
Saturation Flow Module:												
Sat/Lane:	1900	1900	1900	1900	1900	1900	1900	1900	1900	1900	1900	1900
Adjustment:	0.95	0.88	0.88	0.95	0.93	0.93	0.95	0.89	0.89	0.95	0.90	0.90
Lanes:	1.00	1.00	1.00	1.00	1.68	0.32	1.00	2.65	0.35	1.00	2.78	0.22
Final Sat.:	1805	1670	1670	1805	2960	563	1805	4500	593	1805	4755	375
Capacity Analysis Module:												
Vol/Sat:	0.03	0.14	0.14	0.14	0.18	0.18	0.02	0.22	0.22	0.28	0.44	0.44
Crit Moves:		****		****				****		****		
Green/Cycle:	0.05	0.18	0.18	0.18	0.31	0.31	0.02	0.28	0.28	0.36	0.61	0.61
Volume/Cap:	0.58	0.79	0.80	0.79	0.58	0.58	0.72	0.79	0.79	0.79	0.72	0.72
Delay/Veh:	55.9	46.4	46.6	51.8	29.5	29.5	92.8	36.5	36.5	35.6	14.2	14.2
User DelAdj:	1.00	1.00	1.00	1.00	1.00	1.00	1.00	1.00	1.00	1.00	1.00	1.00
AdjDel/Veh:	55.9	46.4	46.6	51.8	29.5	29.5	92.8	36.5	36.5	35.6	14.2	14.2
LOS by Move:	E	D	D	D	C	C	F	D	D	D	B	B
HCM2kAvgQ:	2	10	10	10	9	9	2	14	14	16	18	18

Note: Queue reported is the number of cars per lane.

City of Murrieta General Plan
Future Proposed General Plan
AM Peak Hour

Level Of Service Computation Report
2000 HCM Operations Method (Future Volume Alternative)

Intersection #59 Nutmeg St & Clinton Keith Rd

Cycle (sec): 100 Critical Vol./Cap.(X): 1.194
Loss Time (sec): 0 (Y+R=4.0 sec) Average Delay (sec/veh): 96.5
Optimal Cycle: 180 Level Of Service: F

Street Name:	Nutmeg St						Clinton Keith Rd					
Approach:	North Bound			South Bound			East Bound			West Bound		
Movement:	L	T	R	L	T	R	L	T	R	L	T	R
Control:	Protected			Protected			Protected			Protected		
Rights:	Include			Include			Include			Include		
Min. Green:	0	0	0	0	0	0	0	0	0	0	0	0
Lanes:	1	0 1	1 0	1	0 1	1 0	1	0 2	1 0	1	0 2	1 0
Volume Module:												
Base Vol:	67	41	484	425	54	67	50	2123	110	386	1317	156
Growth Adj:	1.00	1.00	1.00	1.00	1.00	1.00	1.00	1.00	1.00	1.00	1.00	1.00
Initial Bse:	67	41	484	425	54	67	50	2123	110	386	1317	156
Added Vol:	0	0	0	0	0	0	0	0	0	0	0	0
PasserByVol:	0	0	0	0	0	0	0	0	0	0	0	0
Initial Fut:	67	41	484	425	54	67	50	2123	110	386	1317	156
User Adj:	1.00	1.00	1.00	1.00	1.00	1.00	1.00	1.00	1.00	1.00	1.00	1.00
PHF Adj:	1.00	1.00	1.00	1.00	1.00	1.00	1.00	1.00	1.00	1.00	1.00	1.00
PHF Volume:	67	41	484	425	54	67	50	2123	110	386	1317	156
Reduct Vol:	0	0	0	0	0	0	0	0	0	0	0	0
Reduced Vol:	67	41	484	425	54	67	50	2123	110	386	1317	156
PCE Adj:	1.00	1.00	1.00	1.00	1.00	1.00	1.00	1.00	1.00	1.00	1.00	1.00
MLF Adj:	1.00	1.00	1.00	1.00	1.00	1.00	1.00	1.00	1.00	1.00	1.00	1.00
FinalVolume:	67	41	484	425	54	67	50	2123	110	386	1317	156
Saturation Flow Module:												
Sat/Lane:	1900	1900	1900	1900	1900	1900	1900	1900	1900	1900	1900	1900
Adjustment:	0.95	0.82	0.82	0.95	0.87	0.87	0.95	0.90	0.90	0.95	0.90	0.90
Lanes:	1.00	1.00	1.00	1.00	1.00	1.00	1.00	2.85	0.15	1.00	2.68	0.32
Final Sat.:	1805	1556	1556	1805	1655	1655	1805	4897	254	1805	4563	541
Capacity Analysis Module:												
Vol/Sat:	0.04	0.03	0.31	0.24	0.03	0.04	0.03	0.43	0.43	0.21	0.29	0.29
Crit Moves:			****	****				****		****		
Green/Cycle:	0.22	0.26	0.26	0.20	0.24	0.24	0.05	0.36	0.36	0.18	0.49	0.49
Volume/Cap:	0.17	0.10	1.19	1.19	0.14	0.17	0.58	1.19	1.19	1.19	0.58	0.58
Delay/Veh:	31.9	28.1	144.7	151.7	30.0	30.3	56.5	125	124.7	154.6	18.3	18.3
User DelAdj:	1.00	1.00	1.00	1.00	1.00	1.00	1.00	1.00	1.00	1.00	1.00	1.00
AdjDel/Veh:	31.9	28.1	144.7	151.7	30.0	30.3	56.5	125	124.7	154.6	18.3	18.3
LOS by Move:	C	C	F	F	C	C	E	F	F	F	B	B
HCM2kAvgQ:	2	1	29	25	1	2	2	44	44	23	12	12

Note: Queue reported is the number of cars per lane.

City of Murrieta General Plan
Future Proposed General Plan
AM Peak Hour

Level Of Service Computation Report
2000 HCM Operations Method (Future Volume Alternative)

Intersection #60 Murrieta Oaks Ave-Mitchell Rd & Clinton Keith Rd

Cycle (sec): 100 Critical Vol./Cap.(X): 0.862
Loss Time (sec): 0 (Y+R=4.0 sec) Average Delay (sec/veh): 20.4
Optimal Cycle: 165 Level Of Service: C

Street Name:	Murrieta Oaks Ave-Mitchell Rd						Clinton Keith Rd					
Approach:	North Bound			South Bound			East Bound			West Bound		
Movement:	L	T	R	L	T	R	L	T	R	L	T	R
Control:	Protected			Protected			Protected			Protected		
Rights:	Include			Include			Include			Include		
Min. Green:	0	0	0	0	0	0	0	0	0	0	0	0
Lanes:	1	0 0	1 0	1	0 1	0 1	1	0 2	1 0	1	0 2	1 0
Volume Module:												
Base Vol:	101	241	85	19	69	196	203	2903	312	78	2088	405
Growth Adj:	1.00	1.00	1.00	1.00	1.00	1.00	1.00	1.00	1.00	1.00	1.00	1.00
Initial Bse:	101	241	85	19	69	196	203	2903	312	78	2088	405
Added Vol:	0	0	0	0	0	0	0	0	0	0	0	0
PasserByVol:	0	0	0	0	0	0	0	0	0	0	0	0
Initial Fut:	101	241	85	19	69	196	203	2903	312	78	2088	405
User Adj:	1.00	1.00	1.00	1.00	1.00	1.00	1.00	1.00	1.00	1.00	1.00	1.00
PHF Adj:	1.00	1.00	1.00	1.00	1.00	1.00	1.00	1.00	1.00	1.00	1.00	1.00
PHF Volume:	101	241	85	19	69	196	203	2903	312	78	2088	405
Reduct Vol:	0	0	0	0	0	0	0	0	0	0	0	0
Reduced Vol:	101	241	85	19	69	196	203	2903	312	78	2088	405
PCE Adj:	1.00	1.00	1.00	1.00	1.00	1.00	1.00	1.00	1.00	1.00	1.00	1.00
MLF Adj:	1.00	1.00	1.00	1.00	1.00	1.00	1.00	1.00	1.00	1.00	1.00	1.00
FinalVolume:	101	241	85	19	69	196	203	2903	312	78	2088	405
Saturation Flow Module:												
Sat/Lane:	1900	1900	1900	1900	1900	1900	1900	1900	1900	1900	1900	1900
Adjustment:	0.95	0.96	0.96	0.95	1.00	0.85	0.95	0.90	0.90	0.95	0.89	0.89
Lanes:	1.00	0.74	0.26	1.00	1.00	1.00	1.00	2.71	0.29	1.00	2.51	0.49
Final Sat.:	1805	1350	476	1805	1900	1615	1805	4613	496	1805	4240	822
Capacity Analysis Module:												
Vol/Sat:	0.06	0.18	0.18	0.01	0.04	0.12	0.11	0.63	0.63	0.04	0.49	0.49
Crit Moves:		****		****				****		****		
Green/Cycle:	0.07	0.21	0.21	0.01	0.15	0.15	0.15	0.73	0.73	0.05	0.64	0.64
Volume/Cap:	0.81	0.86	0.86	0.86	0.24	0.81	0.77	0.86	0.86	0.86	0.77	0.77
Delay/Veh:	76.8	56.2	56.2	178.2	37.9	59.0	54.6	12.1	12.1	99.5	14.3	14.3
User DelAdj:	1.00	1.00	1.00	1.00	1.00	1.00	1.00	1.00	1.00	1.00	1.00	1.00
AdjDel/Veh:	76.8	56.2	56.2	178.2	37.9	59.0	54.6	12.1	12.1	99.5	14.3	14.3
LOS by Move:	E	E	E	F	D	E	D	B	B	F	B	B
HCM2kAvgQ:	5	13	13	2	2	8	8	29	29	5	21	21

Note: Queue reported is the number of cars per lane.

City of Murrieta General Plan
Future Proposed General Plan
AM Peak Hour

Level Of Service Computation Report
2000 HCM Operations Method (Future Volume Alternative)

Intersection #61 I-215 SB Ramps & Scott Rd

Cycle (sec): 100 Critical Vol./Cap.(X): 0.237
Loss Time (sec): 0 (Y+R=4.0 sec) Average Delay (sec/veh): 8.5
Optimal Cycle: 30 Level Of Service: A

Street Name:	I-215 SB Ramps						Scott Rd					
Approach:	North Bound			South Bound			East Bound			West Bound		
Movement:	L	T	R	L	T	R	L	T	R	L	T	R
Control:	Protected			Protected			Protected			Protected		
Rights:	Include			Include			Ignore			Ignore		
Min. Green:	0	0	0	0	0	0	0	0	0	0	0	0
Lanes:	0 0	0 0	0	2 0	0 0	2	0 0	4 0	1	0 0	3 0	2
Volume Module:												
Base Vol:	0	0	0	246	0	104	0	1052	385	0	866	384
Growth Adj:	1.00	1.00	1.00	1.00	1.00	1.00	1.00	1.00	1.00	1.00	1.00	1.00
Initial Bse:	0	0	0	246	0	104	0	1052	385	0	866	384
Added Vol:	0	0	0	0	0	0	0	0	0	0	0	0
PasserByVol:	0	0	0	0	0	0	0	0	0	0	0	0
Initial Fut:	0	0	0	246	0	104	0	1052	385	0	866	384
User Adj:	1.00	1.00	1.00	1.00	1.00	1.00	1.00	1.00	0.00	1.00	1.00	0.00
PHF Adj:	1.00	1.00	1.00	1.00	1.00	1.00	1.00	1.00	0.00	1.00	1.00	0.00
PHF Volume:	0	0	0	246	0	104	0	1052	0	0	866	0
Reduct Vol:	0	0	0	0	0	0	0	0	0	0	0	0
Reduced Vol:	0	0	0	246	0	104	0	1052	0	0	866	0
PCE Adj:	1.00	1.00	1.00	1.00	1.00	1.00	1.00	1.00	0.00	1.00	1.00	0.00
MLF Adj:	1.00	1.00	1.00	1.00	1.00	1.00	1.00	1.00	0.00	1.00	1.00	0.00
FinalVolume:	0	0	0	246	0	104	0	1052	0	0	866	0
Saturation Flow Module:												
Sat/Lane:	1900	1900	1900	1900	1900	1900	1900	1900	1900	1900	1900	1900
Adjustment:	1.00	1.00	1.00	0.92	1.00	0.75	1.00	0.91	1.00	1.00	0.91	0.88
Lanes:	0.00	0.00	0.00	2.00	0.00	2.00	0.00	4.00	1.00	0.00	3.00	2.00
Final Sat.:	0	0	0	3502	0	2842	0	6916	1900	0	5187	3344
Capacity Analysis Module:												
Vol/Sat:	0.00	0.00	0.00	0.07	0.00	0.04	0.00	0.15	0.00	0.00	0.17	0.00
Crit Moves:				****			****				****	
Green/Cycle:	0.00	0.00	0.00	0.30	0.00	0.30	0.00	0.70	0.00	0.00	0.70	0.00
Volume/Cap:	0.00	0.00	0.00	0.24	0.00	0.12	0.00	0.22	0.00	0.00	0.24	0.00
Delay/Veh:	0.0	0.0	0.0	26.8	0.0	25.8	0.0	5.2	0.0	0.0	5.3	0.0
User DelAdj:	1.00	1.00	1.00	1.00	1.00	1.00	1.00	1.00	1.00	1.00	1.00	1.00
AdjDel/Veh:	0.0	0.0	0.0	26.8	0.0	25.8	0.0	5.2	0.0	0.0	5.3	0.0
LOS by Move:	A	A	A	C	A	C	A	A	A	A	A	A
HCM2kAvgQ:	0	0	0	3	0	1	0	3	0	0	3	0

Note: Queue reported is the number of cars per lane.

City of Murrieta General Plan
Future Proposed General Plan
AM Peak Hour

Level Of Service Computation Report
2000 HCM Operations Method (Future Volume Alternative)

Intersection #62 I-215 NB Ramps & Scott Rd

Cycle (sec): 100 Critical Vol./Cap.(X): 0.376
Loss Time (sec): 0 (Y+R=4.0 sec) Average Delay (sec/veh): 15.9
Optimal Cycle: 37 Level Of Service: B

Street Name:	I-215 NB Ramps						Scott Rd					
Approach:	North Bound			South Bound			East Bound			West Bound		
Movement:	L	T	R	L	T	R	L	T	R	L	T	R
Control:	Protected			Protected			Protected			Protected		
Rights:	Include			Include			Include			Ovl		
Min. Green:	0	0	0	0	0	0	0	0	0	0	0	0
Lanes:	0 0	0 1	2	0 0	0 0	2	2 0	4 0	0	0 0	3 0	2
Volume Module:												
Base Vol:	0	15	600	0	0	259	156	1199	0	0	978	329
Growth Adj:	1.00	1.00	1.00	1.00	1.00	1.00	1.00	1.00	1.00	1.00	1.00	1.00
Initial Bse:	0	15	600	0	0	259	156	1199	0	0	978	329
Added Vol:	0	0	0	0	0	0	0	0	0	0	0	0
PasserByVol:	0	0	0	0	0	0	0	0	0	0	0	0
Initial Fut:	0	15	600	0	0	259	156	1199	0	0	978	329
User Adj:	1.00	1.00	1.00	1.00	1.00	1.00	1.00	1.00	1.00	1.00	1.00	1.00
PHF Adj:	1.00	1.00	1.00	1.00	1.00	1.00	1.00	1.00	1.00	1.00	1.00	1.00
PHF Volume:	0	15	600	0	0	259	156	1199	0	0	978	329
Reduct Vol:	0	0	0	0	0	0	0	0	0	0	0	0
Reduced Vol:	0	15	600	0	0	259	156	1199	0	0	978	329
PCE Adj:	1.00	1.00	1.00	1.00	1.00	1.00	1.00	1.00	1.00	1.00	1.00	1.00
MLF Adj:	1.00	1.00	1.00	1.00	1.00	1.00	1.00	1.00	1.00	1.00	1.00	1.00
FinalVolume:	0	15	600	0	0	259	156	1199	0	0	978	329
Saturation Flow Module:												
Sat/Lane:	1900	1900	1900	1900	1900	1900	1900	1900	1900	1900	1900	1900
Adjustment:	1.00	0.85	0.75	1.00	1.00	0.75	0.92	0.91	1.00	1.00	0.91	0.75
Lanes:	0.00	0.06	2.94	0.00	0.00	2.00	2.00	4.00	0.00	0.00	3.00	2.00
Final Sat.:	0	105	4191	0	0	2842	3502	6916	0	0	5187	2842
Capacity Analysis Module:												
Vol/Sat:	0.00	0.14	0.14	0.00	0.00	0.09	0.04	0.17	0.00	0.00	0.19	0.12
Crit Moves:		****		****			****				****	
Green/Cycle:	0.00	0.38	0.38	0.00	0.00	0.38	0.12	0.62	0.00	0.00	0.50	0.50
Volume/Cap:	0.00	0.38	0.38	0.00	0.00	0.24	0.38	0.28	0.00	0.00	0.38	0.23
Delay/Veh:	0.0	22.5	22.5	0.0	0.0	21.2	41.2	8.8	0.0	0.0	15.4	14.2
User DelAdj:	1.00	1.00	1.00	1.00	1.00	1.00	1.00	1.00	1.00	1.00	1.00	1.00
AdjDel/Veh:	0.0	22.5	22.5	0.0	0.0	21.2	41.2	8.8	0.0	0.0	15.4	14.2
LOS by Move:	A	C	C	A	A	C	D	A	A	A	B	B
HCM2kAvgQ:	0	5	5	0	0	3	3	5	0	0	7	3

Note: Queue reported is the number of cars per lane.

City of Murrieta General Plan
Future Proposed General Plan
AM Peak Hour

Level Of Service Computation Report
2000 HCM Operations Method (Future Volume Alternative)

Intersection #102 Leon Road & Scott Road

Cycle (sec): 100 Critical Vol./Cap.(X): 0.673
Loss Time (sec): 0 (Y+R=4.0 sec) Average Delay (sec/veh): 27.9
Optimal Cycle: 70 Level Of Service: C

Street Name:	Leon Road						Scott Road					
Approach:	North Bound			South Bound			East Bound			West Bound		
Movement:	L -	T -	R	L -	T -	R	L -	T -	R	L -	T -	R
Control:	Protected			Protected			Protected			Protected		
Rights:	Include			Include			Include			Include		
Min. Green:	0	0	0	0	0	0	0	0	0	0	0	0
Lanes:	1 0	1 1	0	1 0	1 1	0	1 0	2 1	0	1 0	2 1	0
Volume Module:												
Base Vol:	104	198	2	101	444	489	353	438	498	14	360	157
Growth Adj:	1.00	1.00	1.00	1.00	1.00	1.00	1.00	1.00	1.00	1.00	1.00	1.00
Initial Bse:	104	198	2	101	444	489	353	438	498	14	360	157
Added Vol:	0	0	0	0	0	0	0	0	0	0	0	0
PasserByVol:	0	0	0	0	0	0	0	0	0	0	0	0
Initial Fut:	104	198	2	101	444	489	353	438	498	14	360	157
User Adj:	1.00	1.00	1.00	1.00	1.00	1.00	1.00	1.00	1.00	1.00	1.00	1.00
PHF Adj:	1.00	1.00	1.00	1.00	1.00	1.00	1.00	1.00	1.00	1.00	1.00	1.00
PHF Volume:	104	198	2	101	444	489	353	438	498	14	360	157
Reduct Vol:	0	0	0	0	0	0	0	0	0	0	0	0
Reduced Vol:	104	198	2	101	444	489	353	438	498	14	360	157
PCE Adj:	1.00	1.00	1.00	1.00	1.00	1.00	1.00	1.00	1.00	1.00	1.00	1.00
MLF Adj:	1.00	1.00	1.00	1.00	1.00	1.00	1.00	1.00	1.00	1.00	1.00	1.00
FinalVolume:	104	198	2	101	444	489	353	438	498	14	360	157
Saturation Flow Module:												
Sat/Lane:	1900	1900	1900	1900	1900	1900	1900	1900	1900	1900	1900	1900
Adjustment:	0.95	0.95	0.95	0.95	0.87	0.87	0.95	0.84	0.84	0.95	0.87	0.87
Lanes:	1.00	1.98	0.02	1.00	1.00	1.00	1.00	2.00	1.00	1.00	2.09	0.91
Final Sat.:	1805	3570	36	1805	1662	1662	1805	3181	1591	1805	3446	1503
Capacity Analysis Module:												
Vol/Sat:	0.06	0.06	0.06	0.06	0.27	0.29	0.20	0.14	0.31	0.01	0.10	0.10
Crit Moves:	****					****			****	****		
Green/Cycle:	0.09	0.26	0.26	0.26	0.44	0.44	0.31	0.47	0.47	0.01	0.17	0.17
Volume/Cap:	0.67	0.21	0.21	0.21	0.61	0.67	0.63	0.30	0.67	0.67	0.63	0.63
Delay/Veh:	55.4	29.1	29.1	29.0	22.3	23.7	31.8	16.6	22.1	111.3	40.4	40.4
User DelAdj:	1.00	1.00	1.00	1.00	1.00	1.00	1.00	1.00	1.00	1.00	1.00	1.00
AdjDel/Veh:	55.4	29.1	29.1	29.0	22.3	23.7	31.8	16.6	22.1	111.3	40.4	40.4
LOS by Move:	E	C	C	C	C	C	C	B	C	F	D	D
HCM2kAvgQ:	4	3	3	2	11	13	10	5	14	1	6	6

Note: Queue reported is the number of cars per lane.

City of Murrieta General Plan
Future Proposed General Plan
AM Peak Hour

Level Of Service Computation Report
2000 HCM Operations Method (Future Volume Alternative)

Intersection #104 Antelope Road & Keller Road

Cycle (sec): 100 Critical Vol./Cap.(X): 1.501
Loss Time (sec): 0 (Y+R=4.0 sec) Average Delay (sec/veh): 158.6
Optimal Cycle: 180 Level Of Service: F

Street Name:	Antelope Road						Keller Road					
Approach:	North Bound			South Bound			East Bound			West Bound		
Movement:	L -	T -	R	L -	T -	R	L -	T -	R	L -	T -	R
Control:	Protected			Protected			Protected			Protected		
Rights:	Include			Include			Include			Include		
Min. Green:	0	0	0	0	0	0	0	0	0	0	0	0
Lanes:	2 0	2 0	1	1 0	2 0	1	2 0	3 0	1	1 0	3 0	1
Volume Module:												
Base Vol:	66	43	328	241	584	447	405	791	1203	758	467	27
Growth Adj:	1.00	1.00	1.00	1.00	1.00	1.00	1.00	1.00	1.00	1.00	1.00	1.00
Initial Bse:	66	43	328	241	584	447	405	791	1203	758	467	27
Added Vol:	0	0	0	0	0	0	0	0	0	0	0	0
PasserByVol:	0	0	0	0	0	0	0	0	0	0	0	0
Initial Fut:	66	43	328	241	584	447	405	791	1203	758	467	27
User Adj:	1.00	1.00	1.00	1.00	1.00	1.00	1.00	1.00	1.00	1.00	1.00	1.00
PHF Adj:	1.00	1.00	1.00	1.00	1.00	1.00	1.00	1.00	1.00	1.00	1.00	1.00
PHF Volume:	66	43	328	241	584	447	405	791	1203	758	467	27
Reduct Vol:	0	0	0	0	0	0	0	0	0	0	0	0
Reduced Vol:	66	43	328	241	584	447	405	791	1203	758	467	27
PCE Adj:	1.00	1.00	1.00	1.00	1.00	1.00	1.00	1.00	1.00	1.00	1.00	1.00
MLF Adj:	1.00	1.00	1.00	1.00	1.00	1.00	1.00	1.00	1.00	1.00	1.00	1.00
FinalVolume:	66	43	328	241	584	447	405	791	1203	758	467	27
Saturation Flow Module:												
Sat/Lane:	1900	1900	1900	1900	1900	1900	1900	1900	1900	1900	1900	1900
Adjustment:	0.92	0.95	0.85	0.95	0.95	0.85	0.92	0.91	0.85	0.95	0.91	0.85
Lanes:	2.00	2.00	1.00	1.00	2.00	1.00	2.00	3.00	1.00	1.00	3.00	1.00
Final Sat.:	3502	3610	1615	1805	3610	1615	3502	5187	1615	1805	5187	1615
Capacity Analysis Module:												
Vol/Sat:	0.02	0.01	0.20	0.13	0.16	0.28	0.12	0.15	0.74	0.42	0.09	0.02
Crit Moves:			****	****					****	****		
Green/Cycle:	0.01	0.14	0.14	0.09	0.21	0.21	0.44	0.50	0.50	0.28	0.34	0.34
Volume/Cap:	1.32	0.09	1.50	1.50	0.77	1.32	0.27	0.31	1.50	1.50	0.27	0.05
Delay/Veh:	283.7	37.9	291.3	300.9	42.1	202.3	18.1	15.0	257.4	271.9	24.0	22.2
User DelAdj:	1.00	1.00	1.00	1.00	1.00	1.00	1.00	1.00	1.00	1.00	1.00	1.00
AdjDel/Veh:	283.7	37.9	291.3	300.9	42.1	202.3	18.1	15.0	257.4	271.9	24.0	22.2
LOS by Move:	F	D	F	F	D	F	B	B	F	F	C	C
HCM2kAvgQ:	4	1	25	19	11	29	4	5	86	55	4	1

Note: Queue reported is the number of cars per lane.

City of Murrieta General Plan
Future Proposed General Plan
AM Peak Hour

Level Of Service Computation Report
2000 HCM Operations Method (Future Volume Alternative)

Intersection #105 Menifee Road - Meadowlark Road & Keller Road

Cycle (sec): 100 Critical Vol./Cap.(X): 1.109
Loss Time (sec): 0 (Y+R=4.0 sec) Average Delay (sec/veh): 68.8
Optimal Cycle: 180 Level Of Service: E

Street Name:	Menifee Road - Meadowlark Road						Keller Road					
Approach:	North Bound			South Bound			East Bound			West Bound		
Movement:	L -	T -	R	L -	T -	R	L -	T -	R	L -	T -	R
Control:	Protected			Protected			Protected			Protected		
Rights:	Include			Include			Include			Include		
Min. Green:	0	0	0	0	0	0	0	0	0	0	0	0
Lanes:	1 0	1	1 0	1 0	1	1 0	2 0	1	1 0	1 0	1	1 0
Volume Module:												
Base Vol:	23	226	251	133	1301	680	495	199	565	299	400	125
Growth Adj:	1.00	1.00	1.00	1.00	1.00	1.00	1.00	1.00	1.00	1.00	1.00	1.00
Initial Bse:	23	226	251	133	1301	680	495	199	565	299	400	125
Added Vol:	0	0	0	0	0	0	0	0	0	0	0	0
PasserByVol:	0	0	0	0	0	0	0	0	0	0	0	0
Initial Fut:	23	226	251	133	1301	680	495	199	565	299	400	125
User Adj:	1.00	1.00	1.00	1.00	1.00	1.00	1.00	1.00	1.00	1.00	1.00	1.00
PHF Adj:	1.00	1.00	1.00	1.00	1.00	1.00	1.00	1.00	1.00	1.00	1.00	1.00
PHF Volume:	23	226	251	133	1301	680	495	199	565	299	400	125
Reduct Vol:	0	0	0	0	0	0	0	0	0	0	0	0
Reduced Vol:	23	226	251	133	1301	680	495	199	565	299	400	125
PCE Adj:	1.00	1.00	1.00	1.00	1.00	1.00	1.00	1.00	1.00	1.00	1.00	1.00
MLF Adj:	1.00	1.00	1.00	1.00	1.00	1.00	1.00	1.00	1.00	1.00	1.00	1.00
FinalVolume:	23	226	251	133	1301	680	495	199	565	299	400	125
Saturation Flow Module:												
Sat/Lane:	1900	1900	1900	1900	1900	1900	1900	1900	1900	1900	1900	1900
Adjustment:	0.95	0.87	0.87	0.95	0.90	0.90	0.92	0.84	0.84	0.95	0.92	0.92
Lanes:	1.00	1.00	1.00	1.00	1.31	0.69	2.00	1.00	1.00	1.00	1.52	0.48
Final Sat.:	1805	1662	1662	1805	2250	1176	3502	1605	1605	1805	2651	829
Capacity Analysis Module:												
Vol/Sat:	0.01	0.14	0.15	0.07	0.58	0.58	0.14	0.12	0.35	0.17	0.15	0.15
Crit Moves:	****				****				****	****		
Green/Cycle:	0.01	0.36	0.36	0.17	0.52	0.52	0.23	0.32	0.32	0.15	0.24	0.24
Volume/Cap:	1.11	0.38	0.42	0.42	1.11	1.11	0.63	0.39	1.11	1.11	0.63	0.63
Delay/Veh:	283.4	24.0	24.5	37.7	81.6	81.6	36.5	26.7	102.2	129.7	35.4	35.4
User DelAdj:	1.00	1.00	1.00	1.00	1.00	1.00	1.00	1.00	1.00	1.00	1.00	1.00
AdjDel/Veh:	283.4	24.0	24.5	37.7	81.6	81.6	36.5	26.7	102.2	129.7	35.4	35.4
LOS by Move:	F	C	C	D	F	F	D	C	F	F	D	D
HCM2kAvgQ:	2	6	6	4	48	48	8	5	30	17	8	8

Note: Queue reported is the number of cars per lane.

City of Murrieta General Plan
Future Proposed General Plan
AM Peak Hour

Level Of Service Computation Report
2000 HCM Operations Method (Future Volume Alternative)

Intersection #107 Leon Road & Keller Road

Cycle (sec): 100 Critical Vol./Cap.(X): 0.389
Loss Time (sec): 0 (Y+R=4.0 sec) Average Delay (sec/veh): 12.3
Optimal Cycle: 31 Level Of Service: B

Street Name:	Leon Road						Keller Road					
Approach:	North Bound			South Bound			East Bound			West Bound		
Movement:	L -	T -	R	L -	T -	R	L -	T -	R	L -	T -	R
Control:	Protected			Permitted			Protected			Permitted		
Rights:	Include			Include			Include			Include		
Min. Green:	0	0	0	0	0	0	0	0	0	0	0	0
Lanes:	1 0	1	1 0	1 0	1	1 0	1 0	1	1 0	1 0	1	1 0
Volume Module:												
Base Vol:	111	330	18	4	868	156	2	60	106	7	65	5
Growth Adj:	1.00	1.00	1.00	1.00	1.00	1.00	1.00	1.00	1.00	1.00	1.00	1.00
Initial Bse:	111	330	18	4	868	156	2	60	106	7	65	5
Added Vol:	0	0	0	0	0	0	0	0	0	0	0	0
PasserByVol:	0	0	0	0	0	0	0	0	0	0	0	0
Initial Fut:	111	330	18	4	868	156	2	60	106	7	65	5
User Adj:	1.00	1.00	1.00	1.00	1.00	1.00	1.00	1.00	1.00	1.00	1.00	1.00
PHF Adj:	1.00	1.00	1.00	1.00	1.00	1.00	1.00	1.00	1.00	1.00	1.00	1.00
PHF Volume:	111	330	18	4	868	156	2	60	106	7	65	5
Reduct Vol:	0	0	0	0	0	0	0	0	0	0	0	0
Reduced Vol:	111	330	18	4	868	156	2	60	106	7	65	5
PCE Adj:	1.00	1.00	1.00	1.00	1.00	1.00	1.00	1.00	1.00	1.00	1.00	1.00
MLF Adj:	1.00	1.00	1.00	1.00	1.00	1.00	1.00	1.00	1.00	1.00	1.00	1.00
FinalVolume:	111	330	18	4	868	156	2	60	106	7	65	5
Saturation Flow Module:												
Sat/Lane:	1900	1900	1900	1900	1900	1900	1900	1900	1900	1900	1900	1900
Adjustment:	0.95	0.94	0.94	0.53	0.93	0.93	0.95	0.86	0.86	0.83	0.94	0.94
Lanes:	1.00	1.90	0.10	1.00	1.70	0.30	1.00	1.00	1.00	1.00	1.86	0.14
Final Sat.:	1805	3396	185	1005	2990	537	1805	1632	1632	1583	3315	255
Capacity Analysis Module:												
Vol/Sat:	0.06	0.10	0.10	0.00	0.29	0.29	0.00	0.04	0.06	0.00	0.02	0.02
Crit Moves:	****				****			****				
Green/Cycle:	0.15	0.86	0.86	0.71	0.71	0.71	0.09	0.14	0.14	0.05	0.05	0.05
Volume/Cap:	0.41	0.11	0.11	0.01	0.41	0.41	0.01	0.27	0.47	0.09	0.41	0.41
Delay/Veh:	39.4	1.1	1.1	4.2	6.0	6.0	41.5	38.8	40.7	46.0	47.8	47.8
User DelAdj:	1.00	1.00	1.00	1.00	1.00	1.00	1.00	1.00	1.00	1.00	1.00	1.00
AdjDel/Veh:	39.4	1.1	1.1	4.2	6.0	6.0	41.5	38.8	40.7	46.0	47.8	47.8
LOS by Move:	D	A	A	A	A	A	D	D	D	D	D	D
HCM2kAvgQ:	3	1	1	0	7	7	0	2	4	0	2	2

Note: Queue reported is the number of cars per lane.

City of Murrieta General Plan
Future Proposed General Plan
AM Peak Hour

Level Of Service Computation Report
2000 HCM Operations Method (Future Volume Alternative)

Intersection #108 Winchester Road - SR-79 & Keller Road

Cycle (sec): 100 | Critical Vol./Cap.(X): 0.567
Loss Time (sec): 0 (Y+R=4.0 sec) | Average Delay (sec/veh): 1.6
Optimal Cycle: 43 | Level Of Service: A

Street Name:	Winchester Road - SR-79						Keller Road					
Approach:	North Bound			South Bound			East Bound			West Bound		
Movement:	L -	T -	R	L -	T -	R	L -	T -	R	L -	T -	R
Control:	Protected			Protected			Permitted			Permitted		
Rights:	Include			Include			Include			Include		
Min. Green:	0	0	0	0	0	0	0	0	0	0	0	0
Lanes:	1 0	2 1	0	1 0	2 1	0	1 0	1 1	0	1 0	1 1	0
Volume Module:												
Base Vol:	1	1512	25	5	2774	3	1	10	1	13	20	50
Growth Adj:	1.00	1.00	1.00	1.00	1.00	1.00	1.00	1.00	1.00	1.00	1.00	1.00
Initial Bse:	1	1512	25	5	2774	3	1	10	1	13	20	50
Added Vol:	0	0	0	0	0	0	0	0	0	0	0	0
PasserByVol:	0	0	0	0	0	0	0	0	0	0	0	0
Initial Fut:	1	1512	25	5	2774	3	1	10	1	13	20	50
User Adj:	1.00	1.00	1.00	1.00	1.00	1.00	1.00	1.00	1.00	1.00	1.00	1.00
PHF Adj:	1.00	1.00	1.00	1.00	1.00	1.00	1.00	1.00	1.00	1.00	1.00	1.00
PHF Volume:	1	1512	25	5	2774	3	1	10	1	13	20	50
Reduct Vol:	0	0	0	0	0	0	0	0	0	0	0	0
Reduced Vol:	1	1512	25	5	2774	3	1	10	1	13	20	50
PCE Adj:	1.00	1.00	1.00	1.00	1.00	1.00	1.00	1.00	1.00	1.00	1.00	1.00
MLF Adj:	1.00	1.00	1.00	1.00	1.00	1.00	1.00	1.00	1.00	1.00	1.00	1.00
FinalVolume:	1	1512	25	5	2774	3	1	10	1	13	20	50
Saturation Flow Module:												
Sat/Lane:	1900	1900	1900	1900	1900	1900	1900	1900	1900	1900	1900	1900
Adjustment:	0.95	0.91	0.91	0.95	0.91	0.91	0.73	0.94	0.94	0.73	0.85	0.85
Lanes:	1.00	2.95	0.05	1.00	2.99	0.01	1.00	1.82	0.18	1.00	1.00	1.00
Final Sat.:	1805	5092	84	1805	5181	6	1389	3236	324	1389	1612	1612
Capacity Analysis Module:												
Vol/Sat:	0.00	0.30	0.30	0.00	0.54	0.54	0.00	0.00	0.00	0.01	0.01	0.03
Crit Moves:	****				****							****
Green/Cycle:	0.00	0.94	0.94	0.01	0.94	0.94	0.05	0.05	0.05	0.05	0.05	0.05
Volume/Cap:	0.57	0.32	0.32	0.32	0.57	0.57	0.01	0.06	0.06	0.17	0.23	0.57
Delay/Veh:	260.2	0.3	0.3	60.5	0.5	0.5	44.8	44.9	44.9	46.2	45.6	52.2
User DelAdj:	1.00	1.00	1.00	1.00	1.00	1.00	1.00	1.00	1.00	1.00	1.00	1.00
AdjDel/Veh:	260.2	0.3	0.3	60.5	0.5	0.5	44.8	44.9	44.9	46.2	45.6	52.2
LOS by Move:	F	A	A	E	A	A	D	D	D	D	D	D
HCM2kAvgQ:	0	2	2	1	5	5	0	0	0	1	1	3

Note: Queue reported is the number of cars per lane.

City of Murrieta General Plan
Future Proposed General Plan
AM Peak Hour

Level Of Service Computation Report
2000 HCM Operations Method (Future Volume Alternative)

Intersection #112 Leon Road & Jean Nicholas

Cycle (sec): 100 | Critical Vol./Cap.(X): 0.397
Loss Time (sec): 0 (Y+R=4.0 sec) | Average Delay (sec/veh): 22.1
Optimal Cycle: 38 | Level Of Service: C

Street Name:	Leon Road						Jean Nicholas					
Approach:	North Bound			South Bound			East Bound			West Bound		
Movement:	L -	T -	R	L -	T -	R	L -	T -	R	L -	T -	R
Control:	Protected			Protected			Protected			Protected		
Rights:	Include			Include			Include			Include		
Min. Green:	0	0	0	0	0	0	0	0	0	0	0	0
Lanes:	1 0	1 1	0	1 0	1 1	0	1 0	1 1	0	1 0	1 1	0
Volume Module:												
Base Vol:	5	183	126	261	649	53	2	145	13	157	22	249
Growth Adj:	1.00	1.00	1.00	1.00	1.00	1.00	1.00	1.00	1.00	1.00	1.00	1.00
Initial Bse:	5	183	126	261	649	53	2	145	13	157	22	249
Added Vol:	0	0	0	0	0	0	0	0	0	0	0	0
PasserByVol:	0	0	0	0	0	0	0	0	0	0	0	0
Initial Fut:	5	183	126	261	649	53	2	145	13	157	22	249
User Adj:	1.00	1.00	1.00	1.00	1.00	1.00	1.00	1.00	1.00	1.00	1.00	1.00
PHF Adj:	1.00	1.00	1.00	1.00	1.00	1.00	1.00	1.00	1.00	1.00	1.00	1.00
PHF Volume:	5	183	126	261	649	53	2	145	13	157	22	249
Reduct Vol:	0	0	0	0	0	0	0	0	0	0	0	0
Reduced Vol:	5	183	126	261	649	53	2	145	13	157	22	249
PCE Adj:	1.00	1.00	1.00	1.00	1.00	1.00	1.00	1.00	1.00	1.00	1.00	1.00
MLF Adj:	1.00	1.00	1.00	1.00	1.00	1.00	1.00	1.00	1.00	1.00	1.00	1.00
FinalVolume:	5	183	126	261	649	53	2	145	13	157	22	249
Saturation Flow Module:												
Sat/Lane:	1900	1900	1900	1900	1900	1900	1900	1900	1900	1900	1900	1900
Adjustment:	0.95	0.89	0.89	0.95	0.94	0.94	0.95	0.94	0.94	0.95	0.82	0.82
Lanes:	1.00	1.18	0.82	1.00	1.85	0.15	1.00	1.84	0.16	1.00	1.00	1.00
Final Sat.:	1805	2008	1382	1805	3301	270	1805	3273	293	1805	1556	1556
Capacity Analysis Module:												
Vol/Sat:	0.00	0.09	0.09	0.14	0.20	0.20	0.00	0.04	0.04	0.09	0.01	0.16
Crit Moves:		****		****			****					****
Green/Cycle:	0.01	0.23	0.23	0.36	0.59	0.59	0.00	0.14	0.14	0.27	0.40	0.40
Volume/Cap:	0.34	0.40	0.40	0.40	0.34	0.34	0.40	0.32	0.32	0.32	0.04	0.40
Delay/Veh:	62.2	33.0	33.0	24.0	10.8	10.8	94.2	39.4	39.4	29.7	18.1	21.6
User DelAdj:	1.00	1.00	1.00	1.00	1.00	1.00	1.00	1.00	1.00	1.00	1.00	1.00
AdjDel/Veh:	62.2	33.0	33.0	24.0	10.8	10.8	94.2	39.4	39.4	29.7	18.1	21.6
LOS by Move:	E	C	C	C	B	B	F	D	D	C	B	C
HCM2kAvgQ:	1	4	4	6	6	6	0	3	3	4	0	6

Note: Queue reported is the number of cars per lane.

City of Murrieta General Plan
Future Proposed General Plan
AM Peak Hour

Level Of Service Computation Report
2000 HCM Operations Method (Future Volume Alternative)

Intersection #122 Meadowlark Lane - Whitewood Road & Clinton Keith Road

Cycle (sec): 100 Critical Vol./Cap.(X): 1.495
Loss Time (sec): 0 (Y+R=4.0 sec) Average Delay (sec/veh): 145.9
Optimal Cycle: 180 Level Of Service: F

Street Name:	Meadowlark Lane - Whitewood Road						Clinton Keith Road					
Approach:	North Bound			South Bound			East Bound			West Bound		
Movement:	L -	T -	R	L -	T -	R	L -	T -	R	L -	T -	R
Control:	Protected			Protected			Protected			Protected		
Rights:	Include			Include			Include			Include		
Min. Green:	0	0	0	0	0	0	0	0	0	0	0	0
Lanes:	2 0	2 0	1	2 0	1 1	0	2 0	3 0	1	2 0	3 0	1
Volume Module:												
Base Vol:	133	230	1083	212	134	715	1386	486	82	943	1187	594
Growth Adj:	1.00	1.00	1.00	1.00	1.00	1.00	1.00	1.00	1.00	1.00	1.00	1.00
Initial Bse:	133	230	1083	212	134	715	1386	486	82	943	1187	594
Added Vol:	0	0	0	0	0	0	0	0	0	0	0	0
PasserByVol:	0	0	0	0	0	0	0	0	0	0	0	0
Initial Fut:	133	230	1083	212	134	715	1386	486	82	943	1187	594
User Adj:	1.00	1.00	1.00	1.00	1.00	1.00	1.00	1.00	1.00	1.00	1.00	1.00
PHF Adj:	1.00	1.00	1.00	1.00	1.00	1.00	1.00	1.00	1.00	1.00	1.00	1.00
PHF Volume:	133	230	1083	212	134	715	1386	486	82	943	1187	594
Reduct Vol:	0	0	0	0	0	0	0	0	0	0	0	0
Reduced Vol:	133	230	1083	212	134	715	1386	486	82	943	1187	594
PCE Adj:	1.00	1.00	1.00	1.00	1.00	1.00	1.00	1.00	1.00	1.00	1.00	1.00
MLF Adj:	1.00	1.00	1.00	1.00	1.00	1.00	1.00	1.00	1.00	1.00	1.00	1.00
FinalVolume:	133	230	1083	212	134	715	1386	486	82	943	1187	594
Saturation Flow Module:												
Sat/Lane:	1900	1900	1900	1900	1900	1900	1900	1900	1900	1900	1900	1900
Adjustment:	0.92	0.95	0.85	0.92	0.83	0.83	0.92	0.91	0.85	0.92	0.91	0.85
Lanes:	2.00	2.00	1.00	2.00	1.00	1.00	2.00	3.00	1.00	2.00	3.00	1.00
Final Sat.:	3502	3610	1615	3502	1578	1578	3502	5187	1615	3502	5187	1615
Capacity Analysis Module:												
Vol/Sat:	0.04	0.06	0.67	0.06	0.08	0.45	0.40	0.09	0.05	0.27	0.23	0.37
Crit Moves:			****	****			****					****
Green/Cycle:	0.04	0.45	0.45	0.04	0.45	0.45	0.26	0.13	0.13	0.38	0.25	0.25
Volume/Cap:	1.00	0.14	1.49	1.49	0.19	1.00	1.49	0.71	0.39	0.71	0.93	1.49
Delay/Veh:	127.4	16.3	257.5	304.0	16.5	59.4	265.1	45.1	40.9	28.2	48.9	273.3
User DelAdj:	1.00	1.00	1.00	1.00	1.00	1.00	1.00	1.00	1.00	1.00	1.00	1.00
AdjDel/Veh:	127.4	16.3	257.5	304.0	16.5	59.4	265.1	45.1	40.9	28.2	48.9	273.3
LOS by Move:	F	B	F	F	B	E	F	D	D	C	D	F
HCM2kAvgQ:	5	2	78	10	3	31	52	7	3	14	17	44

Note: Queue reported is the number of cars per lane.

City of Murrieta General Plan
Future Proposed General Plan
AM Peak Hour

Level Of Service Computation Report
2000 HCM Operations Method (Future Volume Alternative)

Intersection #138 Jefferson Avenue & Cherry Street

Cycle (sec): 100 Critical Vol./Cap.(X): 0.783
Loss Time (sec): 0 (Y+R=4.0 sec) Average Delay (sec/veh): 21.8
Optimal Cycle: 105 Level Of Service: C

Street Name:	Jefferson Avenue						Cherry Street					
Approach:	North Bound			South Bound			East Bound			West Bound		
Movement:	L -	T -	R	L -	T -	R	L -	T -	R	L -	T -	R
Control:	Protected			Protected			Protected			Protected		
Rights:	Include			Include			Include			Include		
Min. Green:	0	0	0	0	0	0	0	0	0	0	0	0
Lanes:	1 0	2 0	1	1 0	1 1	0	1 0	2 1	0	1 0	2 1	0
Volume Module:												
Base Vol:	86	620	196	37	640	22	1	48	6	147	1311	893
Growth Adj:	1.00	1.00	1.00	1.00	1.00	1.00	1.00	1.00	1.00	1.00	1.00	1.00
Initial Bse:	86	620	196	37	640	22	1	48	6	147	1311	893
Added Vol:	0	0	0	0	0	0	0	0	0	0	0	0
PasserByVol:	0	0	0	0	0	0	0	0	0	0	0	0
Initial Fut:	86	620	196	37	640	22	1	48	6	147	1311	893
User Adj:	1.00	1.00	1.00	1.00	1.00	1.00	1.00	1.00	1.00	1.00	1.00	1.00
PHF Adj:	1.00	1.00	1.00	1.00	1.00	1.00	1.00	1.00	1.00	1.00	1.00	1.00
PHF Volume:	86	620	196	37	640	22	1	48	6	147	1311	893
Reduct Vol:	0	0	0	0	0	0	0	0	0	0	0	0
Reduced Vol:	86	620	196	37	640	22	1	48	6	147	1311	893
PCE Adj:	1.00	1.00	1.00	1.00	1.00	1.00	1.00	1.00	1.00	1.00	1.00	1.00
MLF Adj:	1.00	1.00	1.00	1.00	1.00	1.00	1.00	1.00	1.00	1.00	1.00	1.00
FinalVolume:	86	620	196	37	640	22	1	48	6	147	1311	893
Saturation Flow Module:												
Sat/Lane:	1900	1900	1900	1900	1900	1900	1900	1900	1900	1900	1900	1900
Adjustment:	0.95	0.95	0.85	0.95	0.95	0.95	0.95	0.89	0.89	0.95	0.85	0.85
Lanes:	1.00	2.00	1.00	1.00	1.93	0.07	1.00	2.67	0.33	1.00	2.00	1.00
Final Sat.:	1805	3610	1615	1805	3473	119	1805	4532	567	1805	3247	1624
Capacity Analysis Module:												
Vol/Sat:	0.05	0.17	0.12	0.02	0.18	0.18	0.00	0.01	0.01	0.08	0.40	0.55
Crit Moves:	****				****		****					****
Green/Cycle:	0.06	0.26	0.26	0.03	0.24	0.24	0.00	0.08	0.08	0.62	0.70	0.70
Volume/Cap:	0.78	0.65	0.46	0.65	0.78	0.78	0.78	0.13	0.13	0.13	0.57	0.78
Delay/Veh:	76.0	34.2	31.5	71.1	40.6	40.6	573.4	42.8	42.8	7.8	7.6	11.3
User DelAdj:	1.00	1.00	1.00	1.00	1.00	1.00	1.00	1.00	1.00	1.00	1.00	1.00
AdjDel/Veh:	76.0	34.2	31.5	71.1	40.6	40.6	573.4	42.8	42.8	7.8	7.6	11.3
LOS by Move:	E	C	C	E	D	D	F	D	D	A	A	B
HCM2kAvgQ:	4	10	5	2	12	12	0	1	1	2	11	21

Note: Queue reported is the number of cars per lane.

City of Murrieta General Plan
Future Proposed General Plan
AM Peak Hour

Level Of Service Computation Report
2000 HCM Operations Method (Future Volume Alternative)

Intersection #141 Jefferson Ave & Nutmeg St

Cycle (sec): 100 Critical Vol./Cap.(X): 0.997
Loss Time (sec): 0 (Y+R=4.0 sec) Average Delay (sec/veh): 51.1
Optimal Cycle: 180 Level Of Service: D

Street Name:	Jefferson Ave						Nutmeg St					
Approach:	North Bound			South Bound			East Bound			West Bound		
Movement:	L	T	R	L	T	R	L	T	R	L	T	R
Control:	Protected			Protected			Protected			Protected		
Rights:	Include			Include			Include			Include		
Min. Green:	0	0	0	0	0	0	0	0	0	0	0	0
Lanes:	1 0	2 1	0	1 0	2 1	0	1 0	1 1	0	1 0	1 1	0
Volume Module:												
Base Vol:	181	321	272	96	1887	69	93	223	509	366	171	67
Growth Adj:	1.00	1.00	1.00	1.00	1.00	1.00	1.00	1.00	1.00	1.00	1.00	1.00
Initial Bse:	181	321	272	96	1887	69	93	223	509	366	171	67
Added Vol:	0	0	0	0	0	0	0	0	0	0	0	0
PasserByVol:	0	0	0	0	0	0	0	0	0	0	0	0
Initial Fut:	181	321	272	96	1887	69	93	223	509	366	171	67
User Adj:	1.00	1.00	1.00	1.00	1.00	1.00	1.00	1.00	1.00	1.00	1.00	1.00
PHF Adj:	1.00	1.00	1.00	1.00	1.00	1.00	1.00	1.00	1.00	1.00	1.00	1.00
PHF Volume:	181	321	272	96	1887	69	93	223	509	366	171	67
Reduct Vol:	0	0	0	0	0	0	0	0	0	0	0	0
Reduced Vol:	181	321	272	96	1887	69	93	223	509	366	171	67
PCE Adj:	1.00	1.00	1.00	1.00	1.00	1.00	1.00	1.00	1.00	1.00	1.00	1.00
MLF Adj:	1.00	1.00	1.00	1.00	1.00	1.00	1.00	1.00	1.00	1.00	1.00	1.00
FinalVolume:	181	321	272	96	1887	69	93	223	509	366	171	67
Saturation Flow Module:												
Sat/Lane:	1900	1900	1900	1900	1900	1900	1900	1900	1900	1900	1900	1900
Adjustment:	0.95	0.85	0.85	0.95	0.91	0.91	0.95	0.85	0.85	0.95	0.91	0.91
Lanes:	1.00	2.00	1.00	1.00	2.89	0.11	1.00	1.00	1.00	1.00	1.44	0.56
Final Sat.:	1805	3219	1610	1805	4979	182	1805	1617	1617	1805	2485	974
Capacity Analysis Module:												
Vol/Sat:	0.10	0.10	0.17	0.05	0.38	0.38	0.05	0.14	0.31	0.20	0.07	0.07
Crit Moves:	****				****				****	****		
Green/Cycle:	0.10	0.37	0.37	0.12	0.38	0.38	0.22	0.32	0.32	0.20	0.30	0.30
Volume/Cap:	1.00	0.27	0.46	0.46	1.00	1.00	0.23	0.44	1.00	1.00	0.23	0.23
Delay/Veh:	110.7	22.4	24.5	43.0	50.4	50.4	32.2	27.3	66.5	85.8	26.7	26.7
User DelAdj:	1.00	1.00	1.00	1.00	1.00	1.00	1.00	1.00	1.00	1.00	1.00	1.00
AdjDel/Veh:	110.7	22.4	24.5	43.0	50.4	50.4	32.2	27.3	66.5	85.8	26.7	26.7
LOS by Move:	F	C	C	D	D	D	C	C	E	F	C	C
HCM2kAvgQ:	10	4	7	3	29	29	2	6	23	17	3	3

Note: Queue reported is the number of cars per lane.

City of Murrieta General Plan
Future Proposed General Plan
AM Peak Hour

Level Of Service Computation Report
2000 HCM Operations Method (Future Volume Alternative)

Intersection #142 Jefferson Ave & Magnolia St

Cycle (sec): 100 Critical Vol./Cap.(X): 0.701
Loss Time (sec): 0 (Y+R=4.0 sec) Average Delay (sec/veh): 10.7
Optimal Cycle: 76 Level Of Service: B

Street Name:	Jefferson Ave						Magnolia St					
Approach:	North Bound			South Bound			East Bound			West Bound		
Movement:	L	T	R	L	T	R	L	T	R	L	T	R
Control:	Protected			Protected			Protected			Protected		
Rights:	Include			Include			Include			Include		
Min. Green:	0	0	0	0	0	0	0	0	0	0	0	0
Lanes:	1 0	2 1	0	1 0	2 1	0	1 0	0 1	0	1 0	0 1	0
Volume Module:												
Base Vol:	81	637	8	8	2543	247	158	1	155	27	3	1
Growth Adj:	1.00	1.00	1.00	1.00	1.00	1.00	1.00	1.00	1.00	1.00	1.00	1.00
Initial Bse:	81	637	8	8	2543	247	158	1	155	27	3	1
Added Vol:	0	0	0	0	0	0	0	0	0	0	0	0
PasserByVol:	0	0	0	0	0	0	0	0	0	0	0	0
Initial Fut:	81	637	8	8	2543	247	158	1	155	27	3	1
User Adj:	1.00	1.00	1.00	1.00	1.00	1.00	1.00	1.00	1.00	1.00	1.00	1.00
PHF Adj:	1.00	1.00	1.00	1.00	1.00	1.00	1.00	1.00	1.00	1.00	1.00	1.00
PHF Volume:	81	637	8	8	2543	247	158	1	155	27	3	1
Reduct Vol:	0	0	0	0	0	0	0	0	0	0	0	0
Reduced Vol:	81	637	8	8	2543	247	158	1	155	27	3	1
PCE Adj:	1.00	1.00	1.00	1.00	1.00	1.00	1.00	1.00	1.00	1.00	1.00	1.00
MLF Adj:	1.00	1.00	1.00	1.00	1.00	1.00	1.00	1.00	1.00	1.00	1.00	1.00
FinalVolume:	81	637	8	8	2543	247	158	1	155	27	3	1
Saturation Flow Module:												
Sat/Lane:	1900	1900	1900	1900	1900	1900	1900	1900	1900	1900	1900	1900
Adjustment:	0.95	0.91	0.91	0.95	0.90	0.90	0.95	0.85	0.85	0.95	0.96	0.96
Lanes:	1.00	2.96	0.04	1.00	2.73	0.27	1.00	0.01	0.99	1.00	0.75	0.25
Final Sat.:	1805	5112	64	1805	4666	453	1805	10	1607	1805	1372	457
Capacity Analysis Module:												
Vol/Sat:	0.04	0.12	0.12	0.00	0.54	0.54	0.09	0.10	0.10	0.01	0.00	0.00
Crit Moves:	****				****			****		****		
Green/Cycle:	0.06	0.81	0.81	0.03	0.78	0.78	0.16	0.14	0.14	0.02	0.00	0.00
Volume/Cap:	0.70	0.15	0.15	0.15	0.70	0.70	0.56	0.70	0.70	0.70	0.56	0.56
Delay/Veh:	63.4	2.0	2.0	48.7	6.0	6.0	41.8	50.8	50.8	93.3	126	126.3
User DelAdj:	1.00	1.00	1.00	1.00	1.00	1.00	1.00	1.00	1.00	1.00	1.00	1.00
AdjDel/Veh:	63.4	2.0	2.0	48.7	6.0	6.0	41.8	50.8	50.8	93.3	126	126.3
LOS by Move:	E	A	A	D	A	A	D	D	D	F	F	F
HCM2kAvgQ:	4	2	2	0	16	16	5	6	6	2	1	1

Note: Queue reported is the number of cars per lane.

City of Murrieta General Plan
Future Proposed General Plan
AM Peak Hour

Level Of Service Computation Report
2000 HCM Operations Method (Future Volume Alternative)

Intersection #149 Monroe Ave & Murrieta Hot Springs Rd

Cycle (sec): 100 | Critical Vol./Cap.(X): 0.322
Loss Time (sec): 0 (Y+R=4.0 sec) | Average Delay (sec/veh): 8.0
Optimal Cycle: 34 | Level Of Service: A

Street Name:	Monroe Ave						Murrieta Hot Springs Rd					
Approach:	North Bound			South Bound			East Bound			West Bound		
Movement:	L -	T -	R	L -	T -	R	L -	T -	R	L -	T -	R
Control:	Protected			Protected			Protected			Protected		
Rights:	Include			Ovl			Ovl			Include		
Min. Green:	0	0	0	0	0	0	0	0	0	0	0	0
Lanes:	1 0	2 0	1	1 0	2 0	1	1 0	4 0	1	1 0	3 1	0
Volume Module:												
Base Vol:	46	73	48	1	47	50	101	1156	34	7	1552	21
Growth Adj:	1.00	1.00	1.00	1.00	1.00	1.00	1.00	1.00	1.00	1.00	1.00	1.00
Initial Bse:	46	73	48	1	47	50	101	1156	34	7	1552	21
Added Vol:	0	0	0	0	0	0	0	0	0	0	0	0
PasserByVol:	0	0	0	0	0	0	0	0	0	0	0	0
Initial Fut:	46	73	48	1	47	50	101	1156	34	7	1552	21
User Adj:	1.00	1.00	1.00	1.00	1.00	1.00	1.00	1.00	1.00	1.00	1.00	1.00
PHF Adj:	1.00	1.00	1.00	1.00	1.00	1.00	1.00	1.00	1.00	1.00	1.00	1.00
PHF Volume:	46	73	48	1	47	50	101	1156	34	7	1552	21
Reduct Vol:	0	0	0	0	0	0	0	0	0	0	0	0
Reduced Vol:	46	73	48	1	47	50	101	1156	34	7	1552	21
PCE Adj:	1.00	1.00	1.00	1.00	1.00	1.00	1.00	1.00	1.00	1.00	1.00	1.00
MLF Adj:	1.00	1.00	1.00	1.00	1.00	1.00	1.00	1.00	1.00	1.00	1.00	1.00
FinalVolume:	46	73	48	1	47	50	101	1156	34	7	1552	21
Saturation Flow Module:												
Sat/Lane:	1900	1900	1900	1900	1900	1900	1900	1900	1900	1900	1900	1900
Adjustment:	0.95	0.95	0.85	0.95	0.95	0.85	0.95	0.91	0.85	0.95	0.91	0.91
Lanes:	1.00	2.00	1.00	1.00	2.00	1.00	1.00	4.00	1.00	1.00	3.95	0.05
Final Sat.:	1805	3610	1615	1805	3610	1615	1805	6916	1615	1805	6810	92
Capacity Analysis Module:												
Vol/Sat:	0.03	0.02	0.03	0.00	0.01	0.03	0.06	0.17	0.02	0.00	0.23	0.23
Crit Moves:	****				****		****				****	
Green/Cycle:	0.08	0.12	0.12	0.00	0.04	0.21	0.17	0.86	0.94	0.02	0.71	0.71
Volume/Cap:	0.32	0.17	0.25	0.25	0.32	0.14	0.32	0.19	0.02	0.19	0.32	0.32
Delay/Veh:	44.8	40.0	40.9	81.0	47.9	32.1	36.8	1.2	0.2	50.8	5.6	5.6
User DelAdj:	1.00	1.00	1.00	1.00	1.00	1.00	1.00	1.00	1.00	1.00	1.00	1.00
AdjDel/Veh:	44.8	40.0	40.9	81.0	47.9	32.1	36.8	1.2	0.2	50.8	5.6	5.6
LOS by Move:	D	D	D	F	D	C	D	A	A	D	A	A
HCM2kAvgQ:	2	1	2	0	1	1	3	2	0	0	5	5

Note: Queue reported is the number of cars per lane.

City of Murrieta General Plan
Future Proposed General Plan
AM Peak Hour

Level Of Service Computation Report
2000 HCM Operations Method (Future Volume Alternative)

Intersection #158 Adams Ave & Guava St

Cycle (sec): 100 | Critical Vol./Cap.(X): 0.287
Loss Time (sec): 0 (Y+R=4.0 sec) | Average Delay (sec/veh): 12.2
Optimal Cycle: 20 | Level Of Service: B

Street Name:	Adams Ave						Guava St					
Approach:	North Bound			South Bound			East Bound			West Bound		
Movement:	L -	T -	R	L -	T -	R	L -	T -	R	L -	T -	R
Control:	Permitted			Permitted			Permitted			Permitted		
Rights:	Include			Include			Include			Include		
Min. Green:	0	0	0	0	0	0	0	0	0	0	0	0
Lanes:	1 0	1 1	0	1 0	1 1	0	1 0	0 1	0	1 0	0 1	0
Volume Module:												
Base Vol:	78	97	21	101	21	40	23	324	46	3	256	108
Growth Adj:	1.00	1.00	1.00	1.00	1.00	1.00	1.00	1.00	1.00	1.00	1.00	1.00
Initial Bse:	78	97	21	101	21	40	23	324	46	3	256	108
Added Vol:	0	0	0	0	0	0	0	0	0	0	0	0
PasserByVol:	0	0	0	0	0	0	0	0	0	0	0	0
Initial Fut:	78	97	21	101	21	40	23	324	46	3	256	108
User Adj:	1.00	1.00	1.00	1.00	1.00	1.00	1.00	1.00	1.00	1.00	1.00	1.00
PHF Adj:	1.00	1.00	1.00	1.00	1.00	1.00	1.00	1.00	1.00	1.00	1.00	1.00
PHF Volume:	78	97	21	101	21	40	23	324	46	3	256	108
Reduct Vol:	0	0	0	0	0	0	0	0	0	0	0	0
Reduced Vol:	78	97	21	101	21	40	23	324	46	3	256	108
PCE Adj:	1.00	1.00	1.00	1.00	1.00	1.00	1.00	1.00	1.00	1.00	1.00	1.00
MLF Adj:	1.00	1.00	1.00	1.00	1.00	1.00	1.00	1.00	1.00	1.00	1.00	1.00
FinalVolume:	78	97	21	101	21	40	23	324	46	3	256	108
Saturation Flow Module:												
Sat/Lane:	1900	1900	1900	1900	1900	1900	1900	1900	1900	1900	1900	1900
Adjustment:	0.69	0.92	0.92	0.62	0.86	0.86	0.48	0.98	0.98	0.48	0.96	0.96
Lanes:	1.00	1.64	0.36	1.00	1.00	1.00	1.00	0.88	0.12	1.00	0.70	0.30
Final Sat.:	1303	2887	625	1172	1628	1628	918	1632	232	910	1276	538
Capacity Analysis Module:												
Vol/Sat:	0.06	0.03	0.03	0.09	0.01	0.02	0.03	0.20	0.20	0.00	0.20	0.20
Crit Moves:				****							****	
Green/Cycle:	0.30	0.30	0.30	0.30	0.30	0.30	0.70	0.70	0.70	0.70	0.70	0.70
Volume/Cap:	0.20	0.11	0.11	0.29	0.04	0.08	0.04	0.28	0.28	0.00	0.29	0.29
Delay/Veh:	26.3	25.4	25.4	27.2	24.8	25.1	4.7	5.8	5.8	4.5	5.8	5.8
User DelAdj:	1.00	1.00	1.00	1.00	1.00	1.00	1.00	1.00	1.00	1.00	1.00	1.00
AdjDel/Veh:	26.3	25.4	25.4	27.2	24.8	25.1	4.7	5.8	5.8	4.5	5.8	5.8
LOS by Move:	C	C	C	C	C	C	A	A	A	A	A	A
HCM2kAvgQ:	2	1	1	3	0	1	0	4	4	0	4	4

Note: Queue reported is the number of cars per lane.

City of Murrieta General Plan
Future Proposed General Plan
PM Peak Hour

Scenario Report

Scenario:	Future Proposed GP PM
Command:	Future Proposed GP PM
Volume:	Future Proposed GP PM
Geometry:	Future
Impact Fee:	Default Impact Fee
Trip Generation:	Default Trip Generation
Trip Distribution:	Default Trip Distribution
Paths:	Default Path
Routes:	Default Route
Configuration:	Future Proposed GP PM

City of Murrieta General Plan
Future Proposed General Plan
PM Peak Hour

Turning Movement Report

Volume	Northbound			Southbound			Eastbound			Westbound			Total
Type	Left	Thru	Right	Left	Thru	Right	Left	Thru	Right	Left	Thru	Right	Volume
#1 Menifee Road & Scott Road													
Base	291	672	860	196	284	99	272	967	458	408	546	566	5619
Added	0	0	0	0	0	0	0	0	0	0	0	0	0
Total	291	672	860	196	284	99	272	967	458	408	546	566	5619
#2 Leon Road & Scott Road													
Base	0	0	0	0	0	0	0	0	0	0	0	0	0
Added	0	0	0	0	0	0	0	0	0	0	0	0	0
Total	0	0	0	0	0	0	0	0	0	0	0	0	0
#3 Winchester Road/SR-79 & Scott Road													
Base	126	2492	29	1119	1872	128	113	286	119	0	222	1066	7572
Added	0	0	0	0	0	0	0	0	0	0	0	0	0
Total	126	2492	29	1119	1872	128	113	286	119	0	222	1066	7572
#4 Antelope Road & Keller Road													
Base	0	0	0	0	0	0	0	0	0	0	0	0	0
Added	0	0	0	0	0	0	0	0	0	0	0	0	0
Total	0	0	0	0	0	0	0	0	0	0	0	0	0
#5 Menifee Road - Meadowlark Road & Keller Road													
Base	0	0	0	0	0	0	0	0	0	0	0	0	0
Added	0	0	0	0	0	0	0	0	0	0	0	0	0
Total	0	0	0	0	0	0	0	0	0	0	0	0	0
#6 Briggs Road & Keller Road													
Base	300	122	105	1	50	81	20	347	765	9	295	6	2101
Added	0	0	0	0	0	0	0	0	0	0	0	0	0
Total	300	122	105	1	50	81	20	347	765	9	295	6	2101
#7 Leon Road & Keller Road													
Base	0	0	0	0	0	0	0	0	0	0	0	0	0
Added	0	0	0	0	0	0	0	0	0	0	0	0	0
Total	0	0	0	0	0	0	0	0	0	0	0	0	0
#8 Winchester Road - SR-79 & Keller Road													
Base	0	0	0	0	0	0	0	0	0	0	0	0	0
Added	0	0	0	0	0	0	0	0	0	0	0	0	0
Total	0	0	0	0	0	0	0	0	0	0	0	0	0
#9 Antelope Road & Golden City Drive - Baxter Road													
Base	4	428	941	216	974	25	5	202	46	354	178	896	4269
Added	0	0	0	0	0	0	0	0	0	0	0	0	0
Total	4	428	941	216	974	25	5	202	46	354	178	896	4269

City of Murrieta General Plan
Future Proposed General Plan
PM Peak Hour

Volume Type	Northbound Left	Thru	Right	Southbound Left	Thru	Right	Eastbound Left	Thru	Right	Westbound Left	Thru	Right	Total Volume
#10 Whitewood Roa - /Meadowlark Road & Golden City Drive - Baxter Road													
Base	280	1410	3	0	596	978	319	12	967	0	7	2	4574
Added	0	0	0	0	0	0	0	0	0	0	0	0	0
Total	280	1410	3	0	596	978	319	12	967	0	7	2	4574
#11 Briggs Road & Baxter Road - Jean Nicholas													
Base	0	430	89	46	659	0	0	0	0	10	0	87	1321
Added	0	0	0	0	0	0	0	0	0	0	0	0	0
Total	0	430	89	46	659	0	0	0	0	10	0	87	1321
#12 Leon Road & Jean Nicholas													
Base	0	0	0	0	0	0	0	0	0	0	0	0	0
Added	0	0	0	0	0	0	0	0	0	0	0	0	0
Total	0	0	0	0	0	0	0	0	0	0	0	0	0
#13 Winchester Road - SR-79 & Nicholas - Skyview													
Base	196	2680	209	79	2052	17	37	650	118	150	439	125	6752
Added	0	0	0	0	0	0	0	0	0	0	0	0	0
Total	196	2680	209	79	2052	17	37	650	118	150	439	125	6752
#14 Antelope Road & Linnel Lane Extension													
Base	42	637	99	49	1075	525	117	363	394	58	562	426	4347
Added	0	0	0	0	0	0	0	0	0	0	0	0	0
Total	42	637	99	49	1075	525	117	363	394	58	562	426	4347
#15 Whitewood Road - Meadowlark Road & Linnel Lane Extension													
Base	41	819	636	143	1315	229	22	335	154	223	775	779	5471
Added	0	0	0	0	0	0	0	0	0	0	0	0	0
Total	41	819	636	143	1315	229	22	335	154	223	775	779	5471
#16 Leon Road & Max Gillis Road													
Base	546	437	605	355	259	127	100	199	465	565	344	365	4367
Added	0	0	0	0	0	0	0	0	0	0	0	0	0
Total	546	437	605	355	259	127	100	199	465	565	344	365	4367
#17 Winchester Road - SR-79 & Max Gillis - Thompson													
Base	226	2443	80	294	1319	649	759	310	140	32	242	87	6581
Added	0	0	0	0	0	0	0	0	0	0	0	0	0
Total	226	2443	80	294	1319	649	759	310	140	32	242	87	6581
#18 California Oaks Road & Clinton Keith Road													
Base	312	0	1024	0	0	0	0	2396	112	439	2820	0	7103
Added	0	0	0	0	0	0	0	0	0	0	0	0	0
Total	312	0	1024	0	0	0	0	2396	112	439	2820	0	7103

City of Murrieta General Plan
Future Proposed General Plan
PM Peak Hour

Volume Type	Northbound Left	Thru	Right	Southbound Left	Thru	Right	Eastbound Left	Thru	Right	Westbound Left	Thru	Right	Total Volume
#19 I-215 SB Off-Ramp & Clinton Keith Road													
Base	0	0	0	47	0	608	0	2930	784	0	2369	219	6957
Added	0	0	0	0	0	0	0	0	0	0	0	0	0
Total	0	0	0	47	0	608	0	2930	784	0	2369	219	6957
#20 I-215 NB Off Ramp & Clinton Keith Road													
Base	409	0	492	0	0	0	0	1562	280	0	2836	314	5893
Added	0	0	0	0	0	0	0	0	0	0	0	0	0
Total	409	0	492	0	0	0	0	1562	280	0	2836	314	5893
#21 Antelope Road & Clinton Keith Road													
Base	0	0	0	174	0	916	117	2128	0	0	1645	427	5407
Added	0	0	0	0	0	0	0	0	0	0	0	0	0
Total	0	0	0	174	0	916	117	2128	0	0	1645	427	5407
#22 Meadowlark Lane - Whitewood Road & Clinton Keith Road													
Base	0	0	0	0	0	0	0	0	0	0	0	0	0
Added	0	0	0	0	0	0	0	0	0	0	0	0	0
Total	0	0	0	0	0	0	0	0	0	0	0	0	0
#23 Liberty Road & Clinton Keith Road													
Base	81	0	286	0	0	0	0	2323	323	41	2078	0	5132
Added	0	0	0	0	0	0	0	0	0	0	0	0	0
Total	81	0	286	0	0	0	0	2323	323	41	2078	0	5132
#24 Leon Road & Clinton Keith Road													
Base	0	0	0	143	0	1218	638	1950	0	0	913	877	5739
Added	0	0	0	0	0	0	0	0	0	0	0	0	0
Total	0	0	0	143	0	1218	638	1950	0	0	913	877	5739
#25 Winchester Road - SR-79 & Benton Road													
Base	462	2486	738	75	1004	485	83	704	1387	241	720	92	8477
Added	0	0	0	0	0	0	0	0	0	0	0	0	0
Total	462	2486	738	75	1004	485	83	704	1387	241	720	92	8477
#26 Winchester Road - SR-79 & Via Mira Mosa													
Base	69	3255	228	107	2094	356	229	28	54	229	40	129	6818
Added	0	0	0	0	0	0	0	0	0	0	0	0	0
Total	69	3255	228	107	2094	356	229	28	54	229	40	129	6818
#27 Monroe Ave & Los Alamos													
Base	29	469	264	235	281	61	229	1460	165	84	975	467	4719
Added	0	0	0	0	0	0	0	0	0	0	0	0	0
Total	29	469	264	235	281	61	229	1460	165	84	975	467	4719

City of Murrieta General Plan
Future Proposed General Plan
PM Peak Hour

Volume Type	Northbound Left	Northbound Thru	Northbound Right	Southbound Left	Southbound Thru	Southbound Right	Eastbound Left	Eastbound Thru	Eastbound Right	Westbound Left	Westbound Thru	Westbound Right	Total Volume
#28 Jefferson Avenue & Murrieta Hot Springs Road													
Base	6	2300	1226	814	1025	70	40	210	111	581	90	891	7364
Added	0	0	0	0	0	0	0	0	0	0	0	0	0
Total	6	2300	1226	814	1025	70	40	210	111	581	90	891	7364
#29 Madison Avenue & Murrieta Hot Springs Road													
Base	316	600	1218	342	247	116	346	1505	279	791	1185	189	7134
Added	0	0	0	0	0	0	0	0	0	0	0	0	0
Total	316	600	1218	342	247	116	346	1505	279	791	1185	189	7134
#30 I-15 SB Off-Ramp & Murrieta Hot Springs Road													
Base	0	0	0	674	0	422	0	2533	487	0	2188	112	6416
Added	0	0	0	0	0	0	0	0	0	0	0	0	0
Total	0	0	0	674	0	422	0	2533	487	0	2188	112	6416
#31 I-15 NB Off-Ramp & Murrieta Hot Springs Road													
Base	213	0	239	0	0	0	0	2848	370	0	1582	1637	6889
Added	0	0	0	0	0	0	0	0	0	0	0	0	0
Total	213	0	239	0	0	0	0	2848	370	0	1582	1637	6889
#32 I-215 SB Off-Ramp & Murrieta Hot Springs Road													
Base	0	0	0	470	0	362	0	3377	139	0	2338	238	6924
Added	0	0	0	0	0	0	0	0	0	0	0	0	0
Total	0	0	0	470	0	362	0	3377	139	0	2338	238	6924
#33 I-215 NB Off-Ramp & Murrieta Hot Springs Road													
Base	84	0	465	0	0	0	0	2331	104	0	2361	1383	6728
Added	0	0	0	0	0	0	0	0	0	0	0	0	0
Total	84	0	465	0	0	0	0	2331	104	0	2361	1383	6728
#34 Jackson Avenue & Murrieta Hot Springs Road													
Base	201	0	169	0	0	0	0	1910	59	213	2568	0	5120
Added	0	0	0	0	0	0	0	0	0	0	0	0	0
Total	201	0	169	0	0	0	0	1910	59	213	2568	0	5120
#35 Margarita Road & Murrieta Hot Springs Road													
Base	933	69	383	185	77	150	51	1752	538	273	1609	38	6058
Added	0	0	0	0	0	0	0	0	0	0	0	0	0
Total	933	69	383	185	77	150	51	1752	538	273	1609	38	6058
#36 French Valley Parkway & Murrieta Hot Springs Road													
Base	32	0	1110	0	0	0	0	1808	343	453	1697	0	5443
Added	0	0	0	0	0	0	0	0	0	0	0	0	0
Total	32	0	1110	0	0	0	0	1808	343	453	1697	0	5443

City of Murrieta General Plan
Future Proposed General Plan
PM Peak Hour

Volume Type	Northbound Left	Northbound Thru	Northbound Right	Southbound Left	Southbound Thru	Southbound Right	Eastbound Left	Eastbound Thru	Eastbound Right	Westbound Left	Westbound Thru	Westbound Right	Total Volume
#37 Jefferson Avenue & Guava Street													
Base	14	3281	10	11	1174	349	103	86	133	2	71	16	5250
Added	0	0	0	0	0	0	0	0	0	0	0	0	0
Total	14	3281	10	11	1174	349	103	86	133	2	71	16	5250
#38 Jefferson Avenue & Cherry Street													
Base	0	0	0	0	0	0	0	0	0	0	0	0	0
Added	0	0	0	0	0	0	0	0	0	0	0	0	0
Total	0	0	0	0	0	0	0	0	0	0	0	0	0
#39 Washington Ave & Calle Del Oso Oro/Nutmeg													
Base	421	306	134	93	236	55	28	209	276	164	635	163	2720
Added	0	0	0	0	0	0	0	0	0	0	0	0	0
Total	421	306	134	93	236	55	28	209	276	164	635	163	2720
#40 Clinton Keith Rd & Calle de Oso Oro/Bear Creek Dr													
Base	80	179	208	16	90	271	187	520	142	226	747	9	2675
Added	0	0	0	0	0	0	0	0	0	0	0	0	0
Total	80	179	208	16	90	271	187	520	142	226	747	9	2675
#41 Jefferson Ave & Nutmeg St													
Base	0	0	0	0	0	0	0	0	0	0	0	0	0
Added	0	0	0	0	0	0	0	0	0	0	0	0	0
Total	0	0	0	0	0	0	0	0	0	0	0	0	0
#42 Jefferson Ave & Magnolia St													
Base	0	0	0	0	0	0	0	0	0	0	0	0	0
Added	0	0	0	0	0	0	0	0	0	0	0	0	0
Total	0	0	0	0	0	0	0	0	0	0	0	0	0
#43 Jefferson Ave & Lemon St													
Base	418	2124	2	5	1607	38	42	39	270	16	21	13	4595
Added	0	0	0	0	0	0	0	0	0	0	0	0	0
Total	418	2124	2	5	1607	38	42	39	270	16	21	13	4595
#44 Jefferson Ave & Kalmia St													
Base	412	1763	951	978	1203	34	34	658	281	313	533	869	8029
Added	0	0	0	0	0	0	0	0	0	0	0	0	0
Total	412	1763	951	978	1203	34	34	658	281	313	533	869	8029
#45 Jefferson Ave & Juniper St													
Base	192	2787	67	48	1603	98	338	90	378	18	72	82	5773
Added	0	0	0	0	0	0	0	0	0	0	0	0	0
Total	192	2787	67	48	1603	98	338	90	378	18	72	82	5773

City of Murrieta General Plan
Future Proposed General Plan
PM Peak Hour

Volume Type	Northbound Left	Thru	Right	Southbound Left	Thru	Right	Eastbound Left	Thru	Right	Westbound Left	Thru	Right	Total Volume
#46 Jefferson Ave & Ivy St/Los Alamos Rd													
Base	312	2389	685	457	1448	113	90	224	187	259	274	494	6932
Added	0	0	0	0	0	0	0	0	0	0	0	0	0
Total	312	2389	685	457	1448	113	90	224	187	259	274	494	6932
#47 Madison Ave & Kalmia St													
Base	0	0	0	0	0	0	0	0	0	0	0	0	0
Added	0	0	0	0	0	0	0	0	0	0	0	0	0
Total	0	0	0	0	0	0	0	0	0	0	0	0	0
#48 Madison Ave/I-15 SB Ramps & Kalmia St													
Base	392	0	898	306	27	379	0	2534	265	265	1505	614	7185
Added	0	0	0	0	0	0	0	0	0	0	0	0	0
Total	392	0	898	306	27	379	0	2534	265	265	1505	614	7185
#49 Monroe Ave & Murrieta Hot Springs Rd													
Base	0	0	0	0	0	0	0	0	0	0	0	0	0
Added	0	0	0	0	0	0	0	0	0	0	0	0	0
Total	0	0	0	0	0	0	0	0	0	0	0	0	0
#50 Hancock Ave & Murrieta Hot Springs Rd													
Base	0	0	0	598	0	820	755	3291	0	0	2482	311	8257
Added	0	0	0	0	0	0	0	0	0	0	0	0	0
Total	0	0	0	598	0	820	755	3291	0	0	2482	311	8257
#51 Alta Murrieta Dr & Murrieta Hot Springs Rd													
Base	587	221	53	195	128	493	698	1702	518	173	2320	153	7241
Added	0	0	0	0	0	0	0	0	0	0	0	0	0
Total	587	221	53	195	128	493	698	1702	518	173	2320	153	7241
#52 Winchester Road - SR-79 & Murrieta Hot Springs Rd													
Base	334	1970	195	195	1162	1115	1478	1036	280	244	754	99	8862
Added	0	0	0	0	0	0	0	0	0	0	0	0	0
Total	334	1970	195	195	1162	1115	1478	1036	280	244	754	99	8862
#53 Hancock Ave & Los Alamos Rd													
Base	124	438	871	657	115	26	105	1967	46	538	1361	703	6951
Added	0	0	0	0	0	0	0	0	0	0	0	0	0
Total	124	438	871	657	115	26	105	1967	46	538	1361	703	6951
#54 I-215 SB Ramps & Los Alamos Rd													
Base	0	0	0	537	0	1534	0	3121	446	146	1263	0	7047
Added	0	0	0	0	0	0	0	0	0	0	0	0	0
Total	0	0	0	537	0	1534	0	3121	446	146	1263	0	7047

City of Murrieta General Plan
Future Proposed General Plan
PM Peak Hour

Volume Type	Northbound Left	Thru	Right	Southbound Left	Thru	Right	Eastbound Left	Thru	Right	Westbound Left	Thru	Right	Total Volume
#55 I-215 NB Ramps & Los Alamos Rd													
Base	229	0	171	0	0	0	1589	1996	0	0	1182	331	5498
Added	0	0	0	0	0	0	0	0	0	0	0	0	0
Total	229	0	171	0	0	0	1589	1996	0	0	1182	331	5498
#56 Whitewood Rd & Los Alamos Rd													
Base	139	582	34	35	578	567	867	361	298	65	228	48	3802
Added	0	0	0	0	0	0	0	0	0	0	0	0	0
Total	139	582	34	35	578	567	867	361	298	65	228	48	3802
#57 Whitewood Rd & Murrieta Hot Springs Rd													
Base	434	314	529	362	266	233	166	1645	172	401	2240	457	7219
Added	0	0	0	0	0	0	0	0	0	0	0	0	0
Total	434	314	529	362	266	233	166	1645	172	401	2240	457	7219
#58 Adams Ave & Guava St													
Base	0	0	0	0	0	0	0	0	0	0	0	0	0
Added	0	0	0	0	0	0	0	0	0	0	0	0	0
Total	0	0	0	0	0	0	0	0	0	0	0	0	0
#59 Nutmeg St & Clinton Keith Rd													
Base	65	83	494	318	32	58	92	1775	61	552	2056	380	5966
Added	0	0	0	0	0	0	0	0	0	0	0	0	0
Total	65	83	494	318	32	58	92	1775	61	552	2056	380	5966
#60 Murrieta Oaks Ave-Mitchell Rd & Clinton Keith Rd													
Base	16	134	19	103	180	900	135	3159	18	27	2766	395	7852
Added	0	0	0	0	0	0	0	0	0	0	0	0	0
Total	16	134	19	103	180	900	135	3159	18	27	2766	395	7852
#61 I-215 SB Ramps & Scott Rd													
Base	0	0	0	160	0	261	0	756	392	0	1529	445	3543
Added	0	0	0	0	0	0	0	0	0	0	0	0	0
Total	0	0	0	160	0	261	0	756	392	0	1529	445	3543
#62 I-215 NB Ramps & Scott Rd													
Base	0	7	963	0	0	368	80	1012	0	0	1761	395	4586
Added	0	0	0	0	0	0	0	0	0	0	0	0	0
Total	0	7	963	0	0	368	80	1012	0	0	1761	395	4586
#102 Leon Road & Scott Road													
Base	563	411	18	63	209	373	580	525	505	4	374	155	3780
Added	0	0	0	0	0	0	0	0	0	0	0	0	0
Total	563	411	18	63	209	373	580	525	505	4	374	155	3780

City of Murrieta General Plan
Future Proposed General Plan
PM Peak Hour

Volume Type	Northbound Left	Northbound Thru	Northbound Right	Southbound Left	Southbound Thru	Southbound Right	Eastbound Left	Eastbound Thru	Eastbound Right	Westbound Left	Westbound Thru	Westbound Right	Total Volume
#104 Antelope Road & Keller Road													
Base	923	556	870	74	72	563	828	753	209	228	658	167	5901
Added	0	0	0	0	0	0	0	0	0	0	0	0	0
Total	923	556	870	74	72	563	828	753	209	228	658	167	5901
#105 Menifee Road - Meadowlark Road & Keller Road													
Base	174	1077	822	86	680	363	765	314	468	176	392	121	5438
Added	0	0	0	0	0	0	0	0	0	0	0	0	0
Total	174	1077	822	86	680	363	765	314	468	176	392	121	5438
#107 Leon Road & Keller Road													
Base	62	926	1	1	688	78	88	81	281	17	190	3	2416
Added	0	0	0	0	0	0	0	0	0	0	0	0	0
Total	62	926	1	1	688	78	88	81	281	17	190	3	2416
#108 Winchester Road - SR-79 & Keller Road													
Base	1	2693	28	9	2103	1	2	59	2	10	16	25	4949
Added	0	0	0	0	0	0	0	0	0	0	0	0	0
Total	1	2693	28	9	2103	1	2	59	2	10	16	25	4949
#112 Leon Road & Jean Nicholas													
Base	2	530	263	327	553	11	2	128	12	114	123	446	2511
Added	0	0	0	0	0	0	0	0	0	0	0	0	0
Total	2	530	263	327	553	11	2	128	12	114	123	446	2511
#122 Meadowlark Lane - Whitewood Road & Clinton Keith Road													
Base	748	337	589	767	412	730	352	1452	506	314	701	1031	7939
Added	0	0	0	0	0	0	0	0	0	0	0	0	0
Total	748	337	589	767	412	730	352	1452	506	314	701	1031	7939
#138 Jefferson Avenue & Cherry Street													
Base	29	1226	823	196	861	6	2	1060	40	122	793	666	5824
Added	0	0	0	0	0	0	0	0	0	0	0	0	0
Total	29	1226	823	196	861	6	2	1060	40	122	793	666	5824
#141 Jefferson Ave & Nutmeg St													
Base	624	1208	377	103	1155	97	61	133	249	300	223	145	4675
Added	0	0	0	0	0	0	0	0	0	0	0	0	0
Total	624	1208	377	103	1155	97	61	133	249	300	223	145	4675
#142 Jefferson Ave & Magnolia St													
Base	137	2070	11	10	1578	106	159	5	56	7	5	14	4158
Added	0	0	0	0	0	0	0	0	0	0	0	0	0
Total	137	2070	11	10	1578	106	159	5	56	7	5	14	4158

City of Murrieta General Plan
Future Proposed General Plan
PM Peak Hour

Volume Type	Northbound Left	Northbound Thru	Northbound Right	Southbound Left	Southbound Thru	Southbound Right	Eastbound Left	Eastbound Thru	Eastbound Right	Westbound Left	Westbound Thru	Westbound Right	Total Volume
#149 Monroe Ave & Murrieta Hot Springs Rd													
Base	178	236	199	1	239	110	164	2579	154	37	2043	26	5966
Added	0	0	0	0	0	0	0	0	0	0	0	0	0
Total	178	236	199	1	239	110	164	2579	154	37	2043	26	5966
#158 Adams Ave & Guava St													
Base	37	222	27	91	39	205	59	243	181	8	261	165	1538
Added	0	0	0	0	0	0	0	0	0	0	0	0	0
Total	37	222	27	91	39	205	59	243	181	8	261	165	1538

City of Murrieta General Plan
Future Proposed General Plan
PM Peak Hour

Impact Analysis Report
Level Of Service

Intersection	Base LOS	Base Del/ Veh	Base V/ C	Future LOS	Future Del/ Veh	Future V/ C	Change in
# 1 Menifee Road & Scott Road	F	86.3	1.143	F	86.3	1.143	+ 0.000 D/V
# 3 Winchester Road/SR-79 & Scott	F	284.5	1.873	F	284.5	1.873	+ 0.000 D/V
# 6 Briggs Road & Keller Road	B	19.0	0.693	B	19.0	0.693	+ 0.000 D/V
# 9 Antelope Road & Golden City Dr	F	89.2	1.523	F	89.2	1.523	+ 0.000 D/V
# 10 Whitewood Roa - /Meadowlark Ro	F	113.6	1.381	F	113.6	1.381	+ 0.000 D/V
# 11 Briggs Road & Baxter Road - Je	A	8.3	0.227	A	8.3	0.227	+ 0.000 D/V
# 13 Winchester Road - SR-79 & Nich	C	28.5	0.908	C	28.5	0.908	+ 0.000 D/V
# 14 Antelope Road & Linnel Lane Ex	C	28.5	0.847	C	28.5	0.847	+ 0.000 D/V
# 15 Whitewood Road - Meadowlark Ro	D	43.7	0.990	D	43.7	0.990	+ 0.000 D/V
# 16 Leon Road & Max Gillis Road	D	40.3	0.925	D	40.3	0.925	+ 0.000 D/V
# 17 Winchester Road - SR-79 & Max	D	37.8	0.963	D	37.8	0.963	+ 0.000 D/V
# 18 California Oaks Road & Clinton	C	20.7	0.903	C	20.7	0.903	+ 0.000 D/V
# 19 I-215 SB Off-Ramp & Clinton Ke	B	11.5	0.779	B	11.5	0.779	+ 0.000 D/V
# 20 I-215 NB Off Ramp & Clinton Ke	B	17.1	0.851	B	17.1	0.851	+ 0.000 D/V
# 21 Antelope Road & Clinton Keith	A	4.5	0.495	A	4.5	0.495	+ 0.000 D/V
# 23 Liberty Road & Clinton Keith R	B	10.0	0.719	B	10.0	0.719	+ 0.000 D/V
# 24 Leon Road & Clinton Keith Road	C	28.6	0.972	C	28.6	0.972	+ 0.000 D/V
# 25 Winchester Road - SR-79 & Bent	D	53.7	1.057	D	53.7	1.057	+ 0.000 D/V
# 26 Winchester Road - SR-79 & Via	C	25.1	0.965	C	25.1	0.965	+ 0.000 D/V
# 27 Monroe Ave & Los Alamos	C	27.5	0.785	C	27.5	0.785	+ 0.000 D/V
# 28 Jefferson Avenue & Murrieta Ho	F	206.4	1.829	F	206.4	1.829	+ 0.000 D/V
# 29 Madison Avenue & Murrieta Hot	F	129.6	1.342	F	129.6	1.342	+ 0.000 D/V
# 30 I-15 SB Off-Ramp & Murrieta Ho	B	14.3	0.729	B	14.3	0.729	+ 0.000 D/V

City of Murrieta General Plan
Future Proposed General Plan
PM Peak Hour

Intersection	Base LOS	Base Del/ Veh	Base V/ C	Future LOS	Future Del/ Veh	Future V/ C	Change in
# 31 I-15 NB Off-Ramp & Murrieta Ho	A	7.9	0.560	A	7.9	0.560	+ 0.000 D/V
# 32 I-215 SB Off-Ramp & Murrieta H	B	10.8	0.825	B	10.8	0.825	+ 0.000 D/V
# 33 I-215 NB Off-Ramp & Murrieta H	A	9.4	0.619	A	9.4	0.619	+ 0.000 D/V
# 34 Jackson Avenue & Murrieta Hot	A	8.5	0.552	A	8.5	0.552	+ 0.000 D/V
# 35 Margarita Road & Murrieta Hot	D	49.2	1.018	D	49.2	1.018	+ 0.000 D/V
# 36 French Valley Parkway & Murrie	B	18.4	0.815	B	18.4	0.815	+ 0.000 D/V
# 37 Jefferson Avenue & Guava Stree	A	7.9	0.767	A	7.9	0.767	+ 0.000 D/V
# 39 Washington Ave & Calle Del Oso	C	27.5	0.549	C	27.5	0.549	+ 0.000 D/V
# 40 Clinton Keith Rd & Calle de Os	B	16.5	0.651	B	16.5	0.651	+ 0.000 D/V
# 43 Jefferson Ave & Lemon St	B	18.3	0.726	B	18.3	0.726	+ 0.000 D/V
# 44 Jefferson Ave & Kalmia St	F	159.9	1.680	F	159.9	1.680	+ 0.000 D/V
# 45 Jefferson Ave & Juniper St	C	22.3	0.827	C	22.3	0.827	+ 0.000 D/V
# 46 Jefferson Ave & Ivy St/Los Ala	D	35.8	0.944	D	35.8	0.944	+ 0.000 D/V
# 48 Madison Ave/I-15 SB Ramps & Ka	C	30.9	0.889	C	30.9	0.889	+ 0.000 D/V
# 50 Hancock Ave & Murrieta Hot Spr	B	17.6	0.797	B	17.6	0.797	+ 0.000 D/V
# 51 Alta Murrieta Dr & Murrieta Ho	D	51.9	1.012	D	51.9	1.012	+ 0.000 D/V
# 52 Winchester Road - SR-79 & Murr	F	104.8	1.375	F	104.8	1.375	+ 0.000 D/V
# 53 Hancock Ave & Los Alamos Rd	F	223.1	1.581	F	223.1	1.581	+ 0.000 D/V
# 54 I-215 SB Ramps & Los Alamos Rd	F	157.8	1.435	F	157.8	1.435	+ 0.000 D/V
# 55 I-215 NB Ramps & Los Alamos Rd	C	24.4	0.908	C	24.4	0.908	+ 0.000 D/V
# 56 Whitewood Rd & Los Alamos Rd	D	44.6	0.987	D	44.6	0.987	+ 0.000 D/V
# 57 Whitewood Rd & Murrieta Hot Sp	F	88.7	1.149	F	88.7	1.149	+ 0.000 D/V
# 59 Nutmeg St & Clinton Keith Rd	E	78.4	1.152	E	78.4	1.152	+ 0.000 D/V
# 60 Murrieta Oaks Ave-Mitchell Rd	F	120.7	1.262	F	120.7	1.262	+ 0.000 D/V
# 61 I-215 SB Ramps & Scott Rd	A	8.1	0.387	A	8.1	0.387	+ 0.000 D/V

City of Murrieta General Plan
Future Proposed General Plan
PM Peak Hour

Intersection	Base LOS	Base Del/ Veh	Base V/ C	Future LOS	Future Del/ Veh	Future V/ C	Change in
# 62 I-215 NB Ramps & Scott Rd	B	16.2	0.589	B	16.2	0.589	+ 0.000 D/V
#102 Leon Road & Scott Road	D	46.7	0.969	D	46.7	0.969	+ 0.000 D/V
#104 Antelope Road & Keller Road	D	49.9	0.976	D	49.9	0.976	+ 0.000 D/V
#105 Menifee Road - Meadowlark Road	D	47.6	0.993	D	47.6	0.993	+ 0.000 D/V
#107 Leon Road & Keller Road	C	26.2	0.359	C	26.2	0.359	+ 0.000 D/V
#108 Winchester Road - SR-79 & Kell	A	1.6	0.547	A	1.6	0.547	+ 0.000 D/V
#112 Leon Road & Jean Nicholas	C	26.4	0.694	C	26.4	0.694	+ 0.000 D/V
#122 Meadowlark Lane - Whitewood Ro	F	121.7	1.400	F	121.7	1.400	+ 0.000 D/V
#138 Jefferson Avenue & Cherry Stre	D	37.8	1.033	D	37.8	1.033	+ 0.000 D/V
#141 Jefferson Ave & Nutmeg St	D	36.0	0.909	D	36.0	0.909	+ 0.000 D/V
#142 Jefferson Ave & Magnolia St	A	9.4	0.503	A	9.4	0.503	+ 0.000 D/V
#149 Monroe Ave & Murrieta Hot Spri	B	16.2	0.555	B	16.2	0.555	+ 0.000 D/V
#158 Adams Ave & Guava St	B	14.3	0.368	B	14.3	0.368	+ 0.000 D/V

City of Murrieta General Plan
Future Proposed General Plan
PM Peak Hour

Level Of Service Computation Report
2000 HCM Operations Method (Future Volume Alternative)

Intersection #1 Menifee Road & Scott Road

Cycle (sec): 100 Critical Vol./Cap.(X): 1.143
Loss Time (sec): 0 (Y+R=4.0 sec) Average Delay (sec/veh): 86.3
Optimal Cycle: 180 Level Of Service: F

Street Name:	Menifee Rd						Scott Rd					
Approach:	North Bound			South Bound			East Bound			West Bound		
Movement:	L	T	R	L	T	R	L	T	R	L	T	R
Control:	Protected			Protected			Protected			Protected		
Rights:	Include			Include			Include			Include		
Min. Green:	0	0	0	0	0	0	0	0	0	0	0	0
Lanes:	1 0	1	1 0	1 0	1	1 0	1 0	2	1 0	1 0	2	1 0
Volume Module:												
Base Vol:	291	672	860	196	284	99	272	967	458	408	546	566
Growth Adj:	1.00	1.00	1.00	1.00	1.00	1.00	1.00	1.00	1.00	1.00	1.00	1.00
Initial Bse:	291	672	860	196	284	99	272	967	458	408	546	566
Added Vol:	0	0	0	0	0	0	0	0	0	0	0	0
PasserByVol:	0	0	0	0	0	0	0	0	0	0	0	0
Initial Fut:	291	672	860	196	284	99	272	967	458	408	546	566
User Adj:	1.00	1.00	1.00	1.00	1.00	1.00	1.00	1.00	1.00	1.00	1.00	1.00
PHF Adj:	1.00	1.00	1.00	1.00	1.00	1.00	1.00	1.00	1.00	1.00	1.00	1.00
PHF Volume:	291	672	860	196	284	99	272	967	458	408	546	566
Reduct Vol:	0	0	0	0	0	0	0	0	0	0	0	0
Reduced Vol:	291	672	860	196	284	99	272	967	458	408	546	566
PCE Adj:	1.00	1.00	1.00	1.00	1.00	1.00	1.00	1.00	1.00	1.00	1.00	1.00
MLF Adj:	1.00	1.00	1.00	1.00	1.00	1.00	1.00	1.00	1.00	1.00	1.00	1.00
FinalVolume:	291	672	860	196	284	99	272	967	458	408	546	566
Saturation Flow Module:												
Sat/Lane:	1900	1900	1900	1900	1900	1900	1900	1900	1900	1900	1900	1900
Adjustment:	0.95	0.87	0.87	0.95	0.91	0.91	0.95	0.87	0.87	0.95	0.84	0.84
Lanes:	1.00	1.00	1.00	1.00	1.48	0.52	1.00	2.04	0.96	1.00	2.00	1.00
Final Sat.:	1805	1653	1653	1805	2572	897	1805	3351	1587	1805	3195	1598
Capacity Analysis Module:												
Vol/Sat:	0.16	0.41	0.52	0.11	0.11	0.11	0.15	0.29	0.29	0.23	0.17	0.35
Crit Moves:			****	****				****		****		
Green/Cycle:	0.33	0.45	0.45	0.09	0.22	0.22	0.13	0.25	0.25	0.20	0.32	0.32
Volume/Cap:	0.49	0.89	1.14	1.14	0.49	0.49	1.12	1.14	1.14	1.14	0.54	1.12
Delay/Veh:	27.7	31.5	101.1	157.8	34.4	34.4	137.8	112	111.9	132.7	28.5	102.5
User DelAdj:	1.00	1.00	1.00	1.00	1.00	1.00	1.00	1.00	1.00	1.00	1.00	1.00
AdjDel/Veh:	27.7	31.5	101.1	157.8	34.4	34.4	137.8	112	111.9	132.7	28.5	102.5
LOS by Move:	C	C	F	F	C	C	F	F	F	F	C	F
HCM2kAvgQ:	7	24	45	12	6	6	16	28	28	22	8	31

Note: Queue reported is the number of cars per lane.

City of Murrieta General Plan
Future Proposed General Plan
PM Peak Hour

Level Of Service Computation Report
2000 HCM Operations Method (Future Volume Alternative)

Intersection #3 Winchester Road/SR-79 & Scott Road

Cycle (sec): 100 Critical Vol./Cap.(X): 1.873
Loss Time (sec): 0 (Y+R=4.0 sec) Average Delay (sec/veh): 284.5
Optimal Cycle: 180 Level Of Service: F

Street Name:	Winchester Road/SR-79						Scott Road					
Approach:	North Bound			South Bound			East Bound			West Bound		
Movement:	L - T - R			L - T - R			L - T - R			L - T - R		
Control:	Protected			Protected			Protected			Protected		
Rights:	Include			Include			Include			Include		
Min. Green:	0	0	0	0	0	0	0	0	0	0	0	0
Lanes:	1 0	2 1	0	1 0	2 1	0	1 0	2 1	0	1 0	2 1	0
Volume Module:												
Base Vol:	126	2492	29	1119	1872	128	113	286	119	0	222	1066
Growth Adj:	1.00	1.00	1.00	1.00	1.00	1.00	1.00	1.00	1.00	1.00	1.00	1.00
Initial Bse:	126	2492	29	1119	1872	128	113	286	119	0	222	1066
Added Vol:	0	0	0	0	0	0	0	0	0	0	0	0
PasserByVol:	0	0	0	0	0	0	0	0	0	0	0	0
Initial Fut:	126	2492	29	1119	1872	128	113	286	119	0	222	1066
User Adj:	1.00	1.00	1.00	1.00	1.00	1.00	1.00	1.00	1.00	1.00	1.00	1.00
PHF Adj:	1.00	1.00	1.00	1.00	1.00	1.00	1.00	1.00	1.00	1.00	1.00	1.00
PHF Volume:	126	2492	29	1119	1872	128	113	286	119	0	222	1066
Reduct Vol:	0	0	0	0	0	0	0	0	0	0	0	0
Reduced Vol:	126	2492	29	1119	1872	128	113	286	119	0	222	1066
PCE Adj:	1.00	1.00	1.00	1.00	1.00	1.00	1.00	1.00	1.00	1.00	1.00	1.00
MLF Adj:	1.00	1.00	1.00	1.00	1.00	1.00	1.00	1.00	1.00	1.00	1.00	1.00
FinalVolume:	126	2492	29	1119	1872	128	113	286	119	0	222	1066
Saturation Flow Module:												
Sat/Lane:	1900	1900	1900	1900	1900	1900	1900	1900	1900	1900	1900	1900
Adjustment:	0.95	0.91	0.91	0.95	0.90	0.90	0.95	0.87	0.87	1.00	0.80	0.80
Lanes:	1.00	2.97	0.03	1.00	2.81	0.19	1.00	2.12	0.88	1.00	2.00	1.00
Final Sat.:	1805	5117	60	1805	4806	329	1805	3502	1457	1900	3029	1515
Capacity Analysis Module:												
Vol/Sat:	0.07	0.49	0.49	0.62	0.39	0.39	0.06	0.08	0.08	0.00	0.07	0.70
Crit Moves:		****		****			****					****
Green/Cycle:	0.09	0.26	0.26	0.33	0.50	0.50	0.03	0.41	0.41	0.00	0.38	0.38
Volume/Cap:	0.78	1.87	1.87	1.87	0.78	0.78	1.87	0.20	0.20	0.00	0.20	1.87
Delay/Veh:	65.3	433	432.9	432.8	21.9	21.9	497.4	19.1	19.1	0.0	21.0	429.8
User DelAdj:	1.00	1.00	1.00	1.00	1.00	1.00	1.00	1.00	1.00	1.00	1.00	1.00
AdjDel/Veh:	65.3	433	432.9	432.8	21.9	21.9	497.4	19.1	19.1	0.0	21.0	429.8
LOS by Move:	E	F	F	F	C	C	F	B	B	A	C	F
HCM2kAvgQ:	6	82	82	98	20	20	11	3	3	0	3	103

Note: Queue reported is the number of cars per lane.

City of Murrieta General Plan
Future Proposed General Plan
PM Peak Hour

Level Of Service Computation Report
2000 HCM Operations Method (Future Volume Alternative)

Intersection #6 Briggs Road & Keller Road

Cycle (sec): 100 Critical Vol./Cap.(X): 0.693
Loss Time (sec): 0 (Y+R=4.0 sec) Average Delay (sec/veh): 19.0
Optimal Cycle: 74 Level Of Service: B

Street Name:	Briggs Road						Keller Road					
Approach:	North Bound			South Bound			East Bound			West Bound		
Movement:	L - T - R			L - T - R			L - T - R			L - T - R		
Control:	Protected			Protected			Protected			Protected		
Rights:	Include			Include			Include			Include		
Min. Green:	0	0	0	0	0	0	0	0	0	0	0	0
Lanes:	1 0	1 1	0	1 0	1 1	0	1 0	1 1	0	1 0	1 1	0
Volume Module:												
Base Vol:	300	122	105	1	50	81	20	347	765	9	295	6
Growth Adj:	1.00	1.00	1.00	1.00	1.00	1.00	1.00	1.00	1.00	1.00	1.00	1.00
Initial Bse:	300	122	105	1	50	81	20	347	765	9	295	6
Added Vol:	0	0	0	0	0	0	0	0	0	0	0	0
PasserByVol:	0	0	0	0	0	0	0	0	0	0	0	0
Initial Fut:	300	122	105	1	50	81	20	347	765	9	295	6
User Adj:	1.00	1.00	1.00	1.00	1.00	1.00	1.00	1.00	1.00	1.00	1.00	1.00
PHF Adj:	1.00	1.00	1.00	1.00	1.00	1.00	1.00	1.00	1.00	1.00	1.00	1.00
PHF Volume:	300	122	105	1	50	81	20	347	765	9	295	6
Reduct Vol:	0	0	0	0	0	0	0	0	0	0	0	0
Reduced Vol:	300	122	105	1	50	81	20	347	765	9	295	6
PCE Adj:	1.00	1.00	1.00	1.00	1.00	1.00	1.00	1.00	1.00	1.00	1.00	1.00
MLF Adj:	1.00	1.00	1.00	1.00	1.00	1.00	1.00	1.00	1.00	1.00	1.00	1.00
FinalVolume:	300	122	105	1	50	81	20	347	765	9	295	6
Saturation Flow Module:												
Sat/Lane:	1900	1900	1900	1900	1900	1900	1900	1900	1900	1900	1900	1900
Adjustment:	0.95	0.88	0.88	0.95	0.86	0.86	0.95	0.85	0.85	0.95	0.95	0.95
Lanes:	1.00	1.07	0.93	1.00	1.00	1.00	1.00	1.00	1.00	1.00	1.96	0.04
Final Sat.:	1805	1806	1555	1805	1637	1637	1805	1619	1619	1805	3527	72
Capacity Analysis Module:												
Vol/Sat:	0.17	0.07	0.07	0.00	0.03	0.05	0.01	0.21	0.47	0.00	0.08	0.08
Crit Moves:	****					****			****	****		
Green/Cycle:	0.24	0.31	0.31	0.00	0.07	0.07	0.08	0.68	0.68	0.01	0.61	0.61
Volume/Cap:	0.69	0.22	0.22	0.22	0.43	0.69	0.14	0.31	0.69	0.69	0.14	0.14
Delay/Veh:	39.5	25.7	25.7	72.6	45.4	55.9	43.2	6.5	10.9	146.8	8.4	8.4
User DelAdj:	1.00	1.00	1.00	1.00	1.00	1.00	1.00	1.00	1.00	1.00	1.00	1.00
AdjDel/Veh:	39.5	25.7	25.7	72.6	45.4	55.9	43.2	6.5	10.9	146.8	8.4	8.4
LOS by Move:	D	C	C	E	D	E	D	A	B	F	A	A
HCM2kAvgQ:	10	3	3	0	2	4	1	5	16	1	2	2

Note: Queue reported is the number of cars per lane.

City of Murrieta General Plan
Future Proposed General Plan
PM Peak Hour

Level Of Service Computation Report
2000 HCM Operations Method (Future Volume Alternative)

Intersection #9 Antelope Road & Golden City Drive - Baxter Road

Cycle (sec): 100 Critical Vol./Cap.(X): 1.523
Loss Time (sec): 0 (Y+R=4.0 sec) Average Delay (sec/veh): 89.2
Optimal Cycle: 180 Level Of Service: F

Street Name:	Antelope Road						Golden City Drive - Baxter Road					
Approach:	North Bound			South Bound			East Bound			West Bound		
Movement:	L -	T -	R	L -	T -	R	L -	T -	R	L -	T -	R
Control:	Permitted			Permitted			Permitted			Permitted		
Rights:	Include			Include			Include			Include		
Min. Green:	0	0	0	0	0	0	0	0	0	0	0	0
Lanes:	1 0	1	1 0	1 0	1	1 0	1 0	1	1 0	1 0	1	1 0
Volume Module:												
Base Vol:	4	428	941	216	974	25	5	202	46	354	178	896
Growth Adj:	1.00	1.00	1.00	1.00	1.00	1.00	1.00	1.00	1.00	1.00	1.00	1.00
Initial Bse:	4	428	941	216	974	25	5	202	46	354	178	896
Added Vol:	0	0	0	0	0	0	0	0	0	0	0	0
PasserByVol:	0	0	0	0	0	0	0	0	0	0	0	0
Initial Fut:	4	428	941	216	974	25	5	202	46	354	178	896
User Adj:	1.00	1.00	1.00	1.00	1.00	1.00	1.00	1.00	1.00	1.00	1.00	1.00
PHF Adj:	1.00	1.00	1.00	1.00	1.00	1.00	1.00	1.00	1.00	1.00	1.00	1.00
PHF Volume:	4	428	941	216	974	25	5	202	46	354	178	896
Reduct Vol:	0	0	0	0	0	0	0	0	0	0	0	0
Reduced Vol:	4	428	941	216	974	25	5	202	46	354	178	896
PCE Adj:	1.00	1.00	1.00	1.00	1.00	1.00	1.00	1.00	1.00	1.00	1.00	1.00
MLF Adj:	1.00	1.00	1.00	1.00	1.00	1.00	1.00	1.00	1.00	1.00	1.00	1.00
FinalVolume:	4	428	941	216	974	25	5	202	46	354	178	896
Saturation Flow Module:												
Sat/Lane:	1900	1900	1900	1900	1900	1900	1900	1900	1900	1900	1900	1900
Adjustment:	0.22	0.85	0.85	0.12	0.95	0.95	0.11	0.92	0.92	0.51	0.83	0.83
Lanes:	1.00	1.00	1.00	1.00	1.95	0.05	1.00	1.63	0.37	1.00	1.00	1.00
Final Sat.:	412	1619	1619	226	3506	90	203	2858	651	977	1579	1579
Capacity Analysis Module:												
Vol/Sat:	0.01	0.26	0.58	0.96	0.28	0.28	0.02	0.07	0.07	0.36	0.11	0.57
Crit Moves:				****								****
Green/Cycle:	0.63	0.63	0.63	0.63	0.63	0.63	0.37	0.37	0.37	0.37	0.37	0.37
Volume/Cap:	0.02	0.42	0.93	1.52	0.44	0.44	0.07	0.19	0.19	0.97	0.30	1.52
Delay/Veh:	7.0	9.5	26.9	286.3	9.8	9.8	20.5	21.3	21.3	70.7	22.2	273.8
User DelAdj:	1.00	1.00	1.00	1.00	1.00	1.00	1.00	1.00	1.00	1.00	1.00	1.00
AdjDel/Veh:	7.0	9.5	26.9	286.3	9.8	9.8	20.5	21.3	21.3	70.7	22.2	273.8
LOS by Move:	A	A	C	F	A	A	C	C	C	E	C	F
HCM2kAvgQ:	0	7	32	18	8	8	0	3	3	16	4	69

Note: Queue reported is the number of cars per lane.

City of Murrieta General Plan
Future Proposed General Plan
PM Peak Hour

Level Of Service Computation Report
2000 HCM Operations Method (Future Volume Alternative)

Intersection #10 Whitewood Roa - /Meadowlark Road & Golden City Drive - Baxter R

Cycle (sec): 100 Critical Vol./Cap.(X): 1.381
Loss Time (sec): 0 (Y+R=4.0 sec) Average Delay (sec/veh): 113.6
Optimal Cycle: 180 Level Of Service: F

Street Name:	Whitewood Road - Meadowlark Road						Golden City Drive - Baxter Road					
Approach:	North Bound			South Bound			East Bound			West Bound		
Movement:	L -	T -	R	L -	T -	R	L -	T -	R	L -	T -	R
Control:	Protected			Protected			Protected			Protected		
Rights:	Include			Include			Include			Include		
Min. Green:	0	0	0	0	0	0	0	0	0	0	0	0
Lanes:	1 0	1	1 0	1 0	1	1 0	1 0	1	1 0	1 0	1	1 0
Volume Module:												
Base Vol:	280	1410	3	0	596	978	319	12	967	0	7	2
Growth Adj:	1.00	1.00	1.00	1.00	1.00	1.00	1.00	1.00	1.00	1.00	1.00	1.00
Initial Bse:	280	1410	3	0	596	978	319	12	967	0	7	2
Added Vol:	0	0	0	0	0	0	0	0	0	0	0	0
PasserByVol:	0	0	0	0	0	0	0	0	0	0	0	0
Initial Fut:	280	1410	3	0	596	978	319	12	967	0	7	2
User Adj:	1.00	1.00	1.00	1.00	1.00	1.00	1.00	1.00	1.00	1.00	1.00	1.00
PHF Adj:	1.00	1.00	1.00	1.00	1.00	1.00	1.00	1.00	1.00	1.00	1.00	1.00
PHF Volume:	280	1410	3	0	596	978	319	12	967	0	7	2
Reduct Vol:	0	0	0	0	0	0	0	0	0	0	0	0
Reduced Vol:	280	1410	3	0	596	978	319	12	967	0	7	2
PCE Adj:	1.00	1.00	1.00	1.00	1.00	1.00	1.00	1.00	1.00	1.00	1.00	1.00
MLF Adj:	1.00	1.00	1.00	1.00	1.00	1.00	1.00	1.00	1.00	1.00	1.00	1.00
FinalVolume:	280	1410	3	0	596	978	319	12	967	0	7	2
Saturation Flow Module:												
Sat/Lane:	1900	1900	1900	1900	1900	1900	1900	1900	1900	1900	1900	1900
Adjustment:	0.95	0.95	0.95	1.00	0.86	0.86	0.95	0.81	0.81	1.00	0.92	0.92
Lanes:	1.00	1.99	0.01	1.00	1.00	1.00	1.00	1.00	1.00	1.00	1.56	0.44
Final Sat.:	1805	3602	8	1900	1637	1637	1805	1538	1538	1900	2715	776
Capacity Analysis Module:												
Vol/Sat:	0.16	0.39	0.39	0.00	0.36	0.60	0.18	0.01	0.63	0.00	0.00	0.00
Crit Moves:	****					****			****	****		
Green/Cycle:	0.11	0.54	0.54	0.00	0.43	0.43	0.45	0.46	0.46	0.00	0.01	0.01
Volume/Cap:	1.38	0.72	0.72	0.00	0.84	1.38	0.39	0.02	1.38	0.00	0.39	0.39
Delay/Veh:	243.7	18.3	18.3	0.0	29.0	205.5	18.8	15.0	207.6	0.0	60.3	60.3
User DelAdj:	1.00	1.00	1.00	1.00	1.00	1.00	1.00	1.00	1.00	1.00	1.00	1.00
AdjDel/Veh:	243.7	18.3	18.3	0.0	29.0	205.5	18.8	15.0	207.6	0.0	60.3	60.3
LOS by Move:	F	B	B	A	C	F	B	B	F	A	E	E
HCM2kAvgQ:	20	18	18	0	20	67	7	0	67	0	1	1

Note: Queue reported is the number of cars per lane.

City of Murrieta General Plan
Future Proposed General Plan
PM Peak Hour

Level Of Service Computation Report
2000 HCM Operations Method (Future Volume Alternative)

Intersection #11 Briggs Road & Baxter Road - Jean Nicholas

Cycle (sec): 100 | Critical Vol./Cap.(X): 0.227
Loss Time (sec): 0 (Y+R=4.0 sec) | Average Delay (sec/veh): 8.3
Optimal Cycle: 29 | Level Of Service: A

Street Name:	Briggs Road						Baxter Road - Jean Nicholas					
Approach:	North Bound			South Bound			East Bound			West Bound		
Movement:	L -	T -	R	L -	T -	R	L -	T -	R	L -	T -	R
Control:	Protected			Protected			Protected			Protected		
Rights:	Include			Include			Include			Include		
Min. Green:	0	0	0	0	0	0	0	0	0	0	0	0
Lanes:	0	0 1	1 0	1	0 2	0 0	0	0 0	0 0	1	0 0	0 1
Volume Module:												
Base Vol:	0	430	89	46	659	0	0	0	0	10	0	87
Growth Adj:	1.00	1.00	1.00	1.00	1.00	1.00	1.00	1.00	1.00	1.00	1.00	1.00
Initial Bse:	0	430	89	46	659	0	0	0	0	10	0	87
Added Vol:	0	0	0	0	0	0	0	0	0	0	0	0
PasserByVol:	0	0	0	0	0	0	0	0	0	0	0	0
Initial Fut:	0	430	89	46	659	0	0	0	0	10	0	87
User Adj:	1.00	1.00	1.00	1.00	1.00	1.00	1.00	1.00	1.00	1.00	1.00	1.00
PHF Adj:	1.00	1.00	1.00	1.00	1.00	1.00	1.00	1.00	1.00	1.00	1.00	1.00
PHF Volume:	0	430	89	46	659	0	0	0	0	10	0	87
Reduct Vol:	0	0	0	0	0	0	0	0	0	0	0	0
Reduced Vol:	0	430	89	46	659	0	0	0	0	10	0	87
PCE Adj:	1.00	1.00	1.00	1.00	1.00	1.00	1.00	1.00	1.00	1.00	1.00	1.00
MLF Adj:	1.00	1.00	1.00	1.00	1.00	1.00	1.00	1.00	1.00	1.00	1.00	1.00
FinalVolume:	0	430	89	46	659	0	0	0	0	10	0	87
Saturation Flow Module:												
Sat/Lane:	1900	1900	1900	1900	1900	1900	1900	1900	1900	1900	1900	1900
Adjustment:	1.00	0.93	0.93	0.95	0.95	1.00	1.00	1.00	1.00	0.95	1.00	0.85
Lanes:	0.00	1.66	0.34	1.00	2.00	0.00	0.00	0.00	0.00	1.00	0.00	1.00
Final Sat.:	0	2913	603	1805	3610	0	0	0	0	1805	0	1615
Capacity Analysis Module:												
Vol/Sat:	0.00	0.15	0.15	0.03	0.18	0.00	0.00	0.00	0.00	0.01	0.00	0.05
Crit Moves:		****		****								****
Green/Cycle:	0.00	0.65	0.65	0.11	0.76	0.00	0.00	0.00	0.00	0.24	0.00	0.24
Volume/Cap:	0.00	0.23	0.23	0.23	0.24	0.00	0.00	0.00	0.00	0.02	0.00	0.23
Delay/Veh:	0.0	7.2	7.2	41.0	3.5	0.0	0.0	0.0	0.0	29.3	0.0	31.0
User DelAdj:	1.00	1.00	1.00	1.00	1.00	1.00	1.00	1.00	1.00	1.00	1.00	1.00
AdjDel/Veh:	0.0	7.2	7.2	41.0	3.5	0.0	0.0	0.0	0.0	29.3	0.0	31.0
LOS by Move:	A	A	A	D	A	A	A	A	A	C	A	C
HCM2kAvgQ:	0	3	3	1	3	0	0	0	0	0	0	2

Note: Queue reported is the number of cars per lane.

City of Murrieta General Plan
Future Proposed General Plan
PM Peak Hour

Level Of Service Computation Report
2000 HCM Operations Method (Future Volume Alternative)

Intersection #13 Winchester Road - SR-79 & Nicholas - Skyview

Cycle (sec): 100 | Critical Vol./Cap.(X): 0.908
Loss Time (sec): 0 (Y+R=4.0 sec) | Average Delay (sec/veh): 28.5
Optimal Cycle: 180 | Level Of Service: C

Street Name:	Winchester Road - SR-79						Nicholas - Skyview					
Approach:	North Bound			South Bound			East Bound			West Bound		
Movement:	L -	T -	R	L -	T -	R	L -	T -	R	L -	T -	R
Control:	Protected			Protected			Protected			Protected		
Rights:	Include			Include			Include			Include		
Min. Green:	0	0	0	0	0	0	0	0	0	0	0	0
Lanes:	1	0 2	1 0	1	0 2	1 0	1	0 1	1 0	1	0 1	1 0
Volume Module:												
Base Vol:	196	2680	209	79	2052	17	37	650	118	150	439	125
Growth Adj:	1.00	1.00	1.00	1.00	1.00	1.00	1.00	1.00	1.00	1.00	1.00	1.00
Initial Bse:	196	2680	209	79	2052	17	37	650	118	150	439	125
Added Vol:	0	0	0	0	0	0	0	0	0	0	0	0
PasserByVol:	0	0	0	0	0	0	0	0	0	0	0	0
Initial Fut:	196	2680	209	79	2052	17	37	650	118	150	439	125
User Adj:	1.00	1.00	1.00	1.00	1.00	1.00	1.00	1.00	1.00	1.00	1.00	1.00
PHF Adj:	1.00	1.00	1.00	1.00	1.00	1.00	1.00	1.00	1.00	1.00	1.00	1.00
PHF Volume:	196	2680	209	79	2052	17	37	650	118	150	439	125
Reduct Vol:	0	0	0	0	0	0	0	0	0	0	0	0
Reduced Vol:	196	2680	209	79	2052	17	37	650	118	150	439	125
PCE Adj:	1.00	1.00	1.00	1.00	1.00	1.00	1.00	1.00	1.00	1.00	1.00	1.00
MLF Adj:	1.00	1.00	1.00	1.00	1.00	1.00	1.00	1.00	1.00	1.00	1.00	1.00
FinalVolume:	196	2680	209	79	2052	17	37	650	118	150	439	125
Saturation Flow Module:												
Sat/Lane:	1900	1900	1900	1900	1900	1900	1900	1900	1900	1900	1900	1900
Adjustment:	0.95	0.90	0.90	0.95	0.91	0.91	0.95	0.93	0.93	0.95	0.92	0.92
Lanes:	1.00	2.78	0.22	1.00	2.98	0.02	1.00	1.69	0.31	1.00	1.56	0.44
Final Sat.:	1805	4759	371	1805	5139	43	1805	2985	542	1805	2717	774
Capacity Analysis Module:												
Vol/Sat:	0.11	0.56	0.56	0.04	0.40	0.40	0.02	0.22	0.22	0.08	0.16	0.16
Crit Moves:		****		****				****		****		
Green/Cycle:	0.14	0.62	0.62	0.05	0.53	0.53	0.04	0.24	0.24	0.09	0.29	0.29
Volume/Cap:	0.76	0.91	0.91	0.91	0.76	0.76	0.55	0.91	0.91	0.91	0.55	0.55
Delay/Veh:	53.5	20.8	20.8	114.0	20.0	20.0	56.6	50.4	50.4	89.2	30.4	30.4
User DelAdj:	1.00	1.00	1.00	1.00	1.00	1.00	1.00	1.00	1.00	1.00	1.00	1.00
AdjDel/Veh:	53.5	20.8	20.8	114.0	20.0	20.0	56.6	50.4	50.4	89.2	30.4	30.4
LOS by Move:	D	C	C	F	C	C	E	D	D	F	C	C
HCM2kAvgQ:	8	32	32	5	20	20	2	16	16	8	8	8

Note: Queue reported is the number of cars per lane.

City of Murrieta General Plan
Future Proposed General Plan
PM Peak Hour

Level Of Service Computation Report
2000 HCM Operations Method (Future Volume Alternative)

Intersection #14 Antelope Road & Linnel Lane Extension

Cycle (sec): 100 Critical Vol./Cap.(X): 0.847
Loss Time (sec): 0 (Y+R=4.0 sec) Average Delay (sec/veh): 28.5
Optimal Cycle: 149 Level Of Service: C

Street Name:	Antelope Road						Linnel Lane Extension					
Approach:	North Bound			South Bound			East Bound			West Bound		
Movement:	L	T	R	L	T	R	L	T	R	L	T	R
Control:	Protected			Protected			Protected			Protected		
Rights:	Include			Include			Include			Include		
Min. Green:	0	0	0	0	0	0	0	0	0	0	0	0
Lanes:	1 0	1 1	0	1 0	1 1	0	1 0	1 1	0	1 0	1 1	0
Volume Module:												
Base Vol:	42	637	99	49	1075	525	117	363	394	58	562	426
Growth Adj:	1.00	1.00	1.00	1.00	1.00	1.00	1.00	1.00	1.00	1.00	1.00	1.00
Initial Bse:	42	637	99	49	1075	525	117	363	394	58	562	426
Added Vol:	0	0	0	0	0	0	0	0	0	0	0	0
PasserByVol:	0	0	0	0	0	0	0	0	0	0	0	0
Initial Fut:	42	637	99	49	1075	525	117	363	394	58	562	426
User Adj:	1.00	1.00	1.00	1.00	1.00	1.00	1.00	1.00	1.00	1.00	1.00	1.00
PHF Adj:	1.00	1.00	1.00	1.00	1.00	1.00	1.00	1.00	1.00	1.00	1.00	1.00
PHF Volume:	42	637	99	49	1075	525	117	363	394	58	562	426
Reduct Vol:	0	0	0	0	0	0	0	0	0	0	0	0
Reduced Vol:	42	637	99	49	1075	525	117	363	394	58	562	426
PCE Adj:	1.00	1.00	1.00	1.00	1.00	1.00	1.00	1.00	1.00	1.00	1.00	1.00
MLF Adj:	1.00	1.00	1.00	1.00	1.00	1.00	1.00	1.00	1.00	1.00	1.00	1.00
FinalVolume:	42	637	99	49	1075	525	117	363	394	58	562	426
Saturation Flow Module:												
Sat/Lane:	1900	1900	1900	1900	1900	1900	1900	1900	1900	1900	1900	1900
Adjustment:	0.95	0.93	0.93	0.95	0.90	0.90	0.95	0.88	0.88	0.95	0.89	0.89
Lanes:	1.00	1.73	0.27	1.00	1.34	0.66	1.00	1.00	1.00	1.00	1.14	0.86
Final Sat.:	1805	3062	476	1805	2307	1126	1805	1664	1664	1805	1920	1455
Capacity Analysis Module:												
Vol/Sat:	0.02	0.21	0.21	0.03	0.47	0.47	0.06	0.22	0.24	0.03	0.29	0.29
Crit Moves:	****				****		****				****	
Green/Cycle:	0.03	0.51	0.51	0.07	0.55	0.55	0.08	0.37	0.37	0.05	0.35	0.35
Volume/Cap:	0.85	0.41	0.41	0.41	0.85	0.85	0.85	0.59	0.64	0.64	0.85	0.85
Delay/Veh:	121.8	15.2	15.2	47.0	22.7	22.7	81.4	25.9	27.0	60.6	36.2	36.2
User DelAdj:	1.00	1.00	1.00	1.00	1.00	1.00	1.00	1.00	1.00	1.00	1.00	1.00
AdjDel/Veh:	121.8	15.2	15.2	47.0	22.7	22.7	81.4	25.9	27.0	60.6	36.2	36.2
LOS by Move:	F	B	B	D	C	C	F	C	C	E	D	D
HCM2kAvgQ:	3	7	7	2	24	24	6	10	11	3	17	17

Note: Queue reported is the number of cars per lane.

Traffix 7.9.0215 (c) 2008 Dowling Assoc. Licensed to MMA, LONG BEACH, CA

City of Murrieta General Plan
Future Proposed General Plan
PM Peak Hour

Level Of Service Computation Report
2000 HCM Operations Method (Future Volume Alternative)

Intersection #15 Whitewood Road - Meadowlark Road & Linnel Lane Extension

Cycle (sec): 100 Critical Vol./Cap.(X): 0.990
Loss Time (sec): 0 (Y+R=4.0 sec) Average Delay (sec/veh): 43.7
Optimal Cycle: 180 Level Of Service: D

Street Name:	Whitewood Road - Meadowlark Road						Linnel Lane Extension (Future)					
Approach:	North Bound			South Bound			East Bound			West Bound		
Movement:	L	T	R	L	T	R	L	T	R	L	T	R
Control:	Protected			Protected			Protected			Protected		
Rights:	Include			Include			Include			Include		
Min. Green:	0	0	0	0	0	0	0	0	0	0	0	0
Lanes:	1 0	1 1	0	1 0	1 1	0	1 0	1 1	0	1 0	1 1	0
Volume Module:												
Base Vol:	41	819	636	143	1315	229	22	335	154	223	775	779
Growth Adj:	1.00	1.00	1.00	1.00	1.00	1.00	1.00	1.00	1.00	1.00	1.00	1.00
Initial Bse:	41	819	636	143	1315	229	22	335	154	223	775	779
Added Vol:	0	0	0	0	0	0	0	0	0	0	0	0
PasserByVol:	0	0	0	0	0	0	0	0	0	0	0	0
Initial Fut:	41	819	636	143	1315	229	22	335	154	223	775	779
User Adj:	1.00	1.00	1.00	1.00	1.00	1.00	1.00	1.00	1.00	1.00	1.00	1.00
PHF Adj:	1.00	1.00	1.00	1.00	1.00	1.00	1.00	1.00	1.00	1.00	1.00	1.00
PHF Volume:	41	819	636	143	1315	229	22	335	154	223	775	779
Reduct Vol:	0	0	0	0	0	0	0	0	0	0	0	0
Reduced Vol:	41	819	636	143	1315	229	22	335	154	223	775	779
PCE Adj:	1.00	1.00	1.00	1.00	1.00	1.00	1.00	1.00	1.00	1.00	1.00	1.00
MLF Adj:	1.00	1.00	1.00	1.00	1.00	1.00	1.00	1.00	1.00	1.00	1.00	1.00
FinalVolume:	41	819	636	143	1315	229	22	335	154	223	775	779
Saturation Flow Module:												
Sat/Lane:	1900	1900	1900	1900	1900	1900	1900	1900	1900	1900	1900	1900
Adjustment:	0.95	0.89	0.89	0.95	0.93	0.93	0.95	0.91	0.91	0.95	0.88	0.88
Lanes:	1.00	1.13	0.87	1.00	1.70	0.30	1.00	1.37	0.63	1.00	1.00	1.00
Final Sat.:	1805	1898	1474	1805	3007	524	1805	2357	1083	1805	1670	1670
Capacity Analysis Module:												
Vol/Sat:	0.02	0.43	0.43	0.08	0.44	0.44	0.01	0.14	0.14	0.12	0.46	0.47
Crit Moves:	****			****			****					****
Green/Cycle:	0.03	0.44	0.44	0.08	0.49	0.49	0.01	0.26	0.26	0.22	0.47	0.47
Volume/Cap:	0.89	0.99	0.99	0.99	0.89	0.89	0.99	0.55	0.55	0.55	0.98	0.99
Delay/Veh:	140.6	48.9	48.9	117.5	29.3	29.3	235.3	32.7	32.7	35.9	45.0	46.3
User DelAdj:	1.00	1.00	1.00	1.00	1.00	1.00	1.00	1.00	1.00	1.00	1.00	1.00
AdjDel/Veh:	140.6	48.9	48.9	117.5	29.3	29.3	235.3	32.7	32.7	35.9	45.0	46.3
LOS by Move:	F	D	D	F	C	C	F	C	C	D	D	D
HCM2kAvgQ:	3	30	30	8	26	26	2	7	7	7	32	32

Note: Queue reported is the number of cars per lane.

Traffix 7.9.0215 (c) 2008 Dowling Assoc. Licensed to MMA, LONG BEACH, CA

City of Murrieta General Plan
Future Proposed General Plan
PM Peak Hour

Level Of Service Computation Report
2000 HCM Operations Method (Future Volume Alternative)

Intersection #16 Leon Road & Max Gillis Road

Cycle (sec): 100 Critical Vol./Cap.(X): 0.925
Loss Time (sec): 0 (Y+R=4.0 sec) Average Delay (sec/veh): 40.3
Optimal Cycle: 180 Level Of Service: D

Street Name:	Leon Road						Max Gillis Road					
Approach:	North Bound			South Bound			East Bound			West Bound		
Movement:	L	T	R	L	T	R	L	T	R	L	T	R
Control:	Protected			Protected			Protected			Protected		
Rights:	Include			Include			Include			Include		
Min. Green:	0	0	0	0	0	0	0	0	0	0	0	0
Lanes:	2	0 2	0 1	2	0 1	1 0	2	0 1	1 0	2	0 1	0 1
Volume Module:												
Base Vol:	546	437	605	355	259	127	100	199	465	565	344	365
Growth Adj:	1.00	1.00	1.00	1.00	1.00	1.00	1.00	1.00	1.00	1.00	1.00	1.00
Initial Bse:	546	437	605	355	259	127	100	199	465	565	344	365
Added Vol:	0	0	0	0	0	0	0	0	0	0	0	0
PasserByVol:	0	0	0	0	0	0	0	0	0	0	0	0
Initial Fut:	546	437	605	355	259	127	100	199	465	565	344	365
User Adj:	1.00	1.00	1.00	1.00	1.00	1.00	1.00	1.00	1.00	1.00	1.00	1.00
PHF Adj:	1.00	1.00	1.00	1.00	1.00	1.00	1.00	1.00	1.00	1.00	1.00	1.00
PHF Volume:	546	437	605	355	259	127	100	199	465	565	344	365
Reduct Vol:	0	0	0	0	0	0	0	0	0	0	0	0
Reduced Vol:	546	437	605	355	259	127	100	199	465	565	344	365
PCE Adj:	1.00	1.00	1.00	1.00	1.00	1.00	1.00	1.00	1.00	1.00	1.00	1.00
MLF Adj:	1.00	1.00	1.00	1.00	1.00	1.00	1.00	1.00	1.00	1.00	1.00	1.00
FinalVolume:	546	437	605	355	259	127	100	199	465	565	344	365
Saturation Flow Module:												
Sat/Lane:	1900	1900	1900	1900	1900	1900	1900	1900	1900	1900	1900	1900
Adjustment:	0.92	0.95	0.85	0.92	0.90	0.90	0.92	0.85	0.85	0.92	1.00	0.85
Lanes:	2.00	2.00	1.00	2.00	1.34	0.66	2.00	1.00	1.00	2.00	1.00	1.00
Final Sat.:	3502	3610	1615	3502	2304	1130	3502	1615	1615	3502	1900	1615
Capacity Analysis Module:												
Vol/Sat:	0.16	0.12	0.37	0.10	0.11	0.11	0.03	0.12	0.29	0.16	0.18	0.23
Crit Moves:			****	****					****	****		
Green/Cycle:	0.30	0.40	0.40	0.11	0.22	0.22	0.05	0.31	0.31	0.17	0.43	0.43
Volume/Cap:	0.52	0.30	0.93	0.93	0.52	0.52	0.52	0.40	0.93	0.93	0.42	0.52
Delay/Veh:	29.6	20.3	47.4	72.0	35.3	35.3	48.7	27.2	51.2	60.7	20.1	21.6
User DelAdj:	1.00	1.00	1.00	1.00	1.00	1.00	1.00	1.00	1.00	1.00	1.00	1.00
AdjDel/Veh:	29.6	20.3	47.4	72.0	35.3	35.3	48.7	27.2	51.2	60.7	20.1	21.6
LOS by Move:	C	C	D	E	D	D	D	C	D	E	C	C
HCM2kAvgQ:	8	5	22	9	6	6	2	5	19	13	7	9

Note: Queue reported is the number of cars per lane.

City of Murrieta General Plan
Future Proposed General Plan
PM Peak Hour

Level Of Service Computation Report
2000 HCM Operations Method (Future Volume Alternative)

Intersection #17 Winchester Road - SR-79 & Max Gillis - Thompson

Cycle (sec): 100 Critical Vol./Cap.(X): 0.963
Loss Time (sec): 0 (Y+R=4.0 sec) Average Delay (sec/veh): 37.8
Optimal Cycle: 180 Level Of Service: D

Street Name:	Winchester Road - SR-79						Max Gillis - Thompson					
Approach:	North Bound			South Bound			East Bound			West Bound		
Movement:	L	T	R	L	T	R	L	T	R	L	T	R
Control:	Protected			Protected			Protected			Protected		
Rights:	Include			Include			Include			Include		
Min. Green:	0	0	0	0	0	0	0	0	0	0	0	0
Lanes:	1	0 2	1 0	1	0 3	0 1	2	0 2	0 1	1	0 1	1 0
Volume Module:												
Base Vol:	226	2443	80	294	1319	649	759	310	140	32	242	87
Growth Adj:	1.00	1.00	1.00	1.00	1.00	1.00	1.00	1.00	1.00	1.00	1.00	1.00
Initial Bse:	226	2443	80	294	1319	649	759	310	140	32	242	87
Added Vol:	0	0	0	0	0	0	0	0	0	0	0	0
PasserByVol:	0	0	0	0	0	0	0	0	0	0	0	0
Initial Fut:	226	2443	80	294	1319	649	759	310	140	32	242	87
User Adj:	1.00	1.00	1.00	1.00	1.00	1.00	1.00	1.00	1.00	1.00	1.00	1.00
PHF Adj:	1.00	1.00	1.00	1.00	1.00	1.00	1.00	1.00	1.00	1.00	1.00	1.00
PHF Volume:	226	2443	80	294	1319	649	759	310	140	32	242	87
Reduct Vol:	0	0	0	0	0	0	0	0	0	0	0	0
Reduced Vol:	226	2443	80	294	1319	649	759	310	140	32	242	87
PCE Adj:	1.00	1.00	1.00	1.00	1.00	1.00	1.00	1.00	1.00	1.00	1.00	1.00
MLF Adj:	1.00	1.00	1.00	1.00	1.00	1.00	1.00	1.00	1.00	1.00	1.00	1.00
FinalVolume:	226	2443	80	294	1319	649	759	310	140	32	242	87
Saturation Flow Module:												
Sat/Lane:	1900	1900	1900	1900	1900	1900	1900	1900	1900	1900	1900	1900
Adjustment:	0.95	0.91	0.91	0.95	0.91	0.85	0.92	0.95	0.85	0.95	0.91	0.91
Lanes:	1.00	2.90	0.10	1.00	3.00	1.00	2.00	2.00	1.00	1.00	1.47	0.53
Final Sat.:	1805	4997	164	1805	5187	1615	3502	3610	1615	1805	2549	916
Capacity Analysis Module:												
Vol/Sat:	0.13	0.49	0.49	0.16	0.25	0.40	0.22	0.09	0.09	0.02	0.09	0.09
Crit Moves:		****		****			****				****	
Green/Cycle:	0.16	0.51	0.51	0.17	0.52	0.52	0.22	0.27	0.27	0.05	0.10	0.10
Volume/Cap:	0.78	0.96	0.96	0.96	0.49	0.78	0.96	0.32	0.32	0.32	0.96	0.96
Delay/Veh:	52.9	34.2	34.2	82.8	15.9	24.3	61.7	29.5	29.7	47.4	83.8	83.8
User DelAdj:	1.00	1.00	1.00	1.00	1.00	1.00	1.00	1.00	1.00	1.00	1.00	1.00
AdjDel/Veh:	52.9	34.2	34.2	82.8	15.9	24.3	61.7	29.5	29.7	47.4	83.8	83.8
LOS by Move:	D	C	C	F	B	C	E	C	C	D	F	F
HCM2kAvgQ:	9	34	34	14	10	18	17	4	4	1	9	9

Note: Queue reported is the number of cars per lane.

City of Murrieta General Plan
Future Proposed General Plan
PM Peak Hour

Level Of Service Computation Report
2000 HCM Operations Method (Future Volume Alternative)

Intersection #18 California Oaks Road & Clinton Keith Road

Cycle (sec): 100 — Critical Vol./Cap.(X): 0.903
Loss Time (sec): 0 (Y+R=4.0 sec) — Average Delay (sec/veh): 20.7
Optimal Cycle: 180 — Level Of Service: C

Street Name:	California Oaks Road						Clinton Keith Road					
Approach:	North Bound			South Bound			East Bound			West Bound		
Movement:	L	T	R	L	T	R	L	T	R	L	T	R
Control:	Protected			Protected			Protected			Protected		
Rights:	Ovl			Include			Include			Include		
Min. Green:	0	0	0	0	0	0	0	0	0	0	0	0
Lanes:	1 0	0 0	2	0 0	0 0	0	0 0	2 1	0	1 0	3 0	0
Volume Module:												
Base Vol:	312	0	1024	0	0	0	0	2396	112	439	2820	0
Growth Adj:	1.00	1.00	1.00	1.00	1.00	1.00	1.00	1.00	1.00	1.00	1.00	1.00
Initial Bse:	312	0	1024	0	0	0	0	2396	112	439	2820	0
Added Vol:	0	0	0	0	0	0	0	0	0	0	0	0
PasserByVol:	0	0	0	0	0	0	0	0	0	0	0	0
Initial Fut:	312	0	1024	0	0	0	0	2396	112	439	2820	0
User Adj:	1.00	1.00	1.00	1.00	1.00	1.00	1.00	1.00	1.00	1.00	1.00	1.00
PHF Adj:	1.00	1.00	1.00	1.00	1.00	1.00	1.00	1.00	1.00	1.00	1.00	1.00
PHF Volume:	312	0	1024	0	0	0	0	2396	112	439	2820	0
Reduct Vol:	0	0	0	0	0	0	0	0	0	0	0	0
Reduced Vol:	312	0	1024	0	0	0	0	2396	112	439	2820	0
PCE Adj:	1.00	1.00	1.00	1.00	1.00	1.00	1.00	1.00	1.00	1.00	1.00	1.00
MLF Adj:	1.00	1.00	1.00	1.00	1.00	1.00	1.00	1.00	1.00	1.00	1.00	1.00
FinalVolume:	312	0	1024	0	0	0	0	2396	112	439	2820	0
Saturation Flow Module:												
Sat/Lane:	1900	1900	1900	1900	1900	1900	1900	1900	1900	1900	1900	1900
Adjustment:	0.95	1.00	0.75	1.00	1.00	1.00	1.00	0.90	0.90	0.95	0.91	1.00
Lanes:	1.00	0.00	2.00	0.00	0.00	0.00	0.00	2.87	0.13	1.00	3.00	0.00
Final Sat.:	1805	0	2842	0	0	0	0	4921	230	1805	5187	0
Capacity Analysis Module:												
Vol/Sat:	0.17	0.00	0.36	0.00	0.00	0.00	0.00	0.49	0.49	0.24	0.54	0.00
Crit Moves:	****							****		****		
Green/Cycle:	0.19	0.00	0.46	0.00	0.00	0.00	0.00	0.54	0.54	0.27	0.81	0.00
Volume/Cap:	0.90	0.00	0.78	0.00	0.00	0.00	0.00	0.90	0.90	0.90	0.67	0.00
Delay/Veh:	65.3	0.0	25.9	0.0	0.0	0.0	0.0	25.3	25.3	55.2	4.5	0.0
User DelAdj:	1.00	1.00	1.00	1.00	1.00	1.00	1.00	1.00	1.00	1.00	1.00	1.00
AdjDel/Veh:	65.3	0.0	25.9	0.0	0.0	0.0	0.0	25.3	25.3	55.2	4.5	0.0
LOS by Move:	E	A	C	A	A	A	A	C	C	E	A	A
HCM2kAvgQ:	13	0	17	0	0	0	0	29	29	17	14	0

Note: Queue reported is the number of cars per lane.

City of Murrieta General Plan
Future Proposed General Plan
PM Peak Hour

Level Of Service Computation Report
2000 HCM Operations Method (Future Volume Alternative)

Intersection #19 I-215 SB Off-Ramp & Clinton Keith Road

Cycle (sec): 100 — Critical Vol./Cap.(X): 0.779
Loss Time (sec): 0 (Y+R=4.0 sec) — Average Delay (sec/veh): 11.5
Optimal Cycle: 103 — Level Of Service: B

Street Name:	I-215 SB Off-Ramp						Clinton Keith Road					
Approach:	North Bound			South Bound			East Bound			West Bound		
Movement:	L	T	R	L	T	R	L	T	R	L	T	R
Control:	Split Phase			Split Phase			Protected			Protected		
Rights:	Include			Include			Include			Ignore		
Min. Green:	0	0	0	0	0	0	0	0	0	0	0	0
Lanes:	0 0	0 0	0	0 1	0 0	2	0 0	3 0	1	0 0	3 0	1
Volume Module:												
Base Vol:	0	0	0	47	0	608	0	2930	784	0	2369	219
Growth Adj:	1.00	1.00	1.00	1.00	1.00	1.00	1.00	1.00	1.00	1.00	1.00	1.00
Initial Bse:	0	0	0	47	0	608	0	2930	784	0	2369	219
Added Vol:	0	0	0	0	0	0	0	0	0	0	0	0
PasserByVol:	0	0	0	0	0	0	0	0	0	0	0	0
Initial Fut:	0	0	0	47	0	608	0	2930	784	0	2369	219
User Adj:	1.00	1.00	1.00	1.00	1.00	1.00	1.00	1.00	1.00	1.00	1.00	0.00
PHF Adj:	1.00	1.00	1.00	1.00	1.00	1.00	1.00	1.00	1.00	1.00	1.00	0.00
PHF Volume:	0	0	0	47	0	608	0	2930	784	0	2369	0
Reduct Vol:	0	0	0	0	0	0	0	0	0	0	0	0
Reduced Vol:	0	0	0	47	0	608	0	2930	784	0	2369	0
PCE Adj:	1.00	1.00	1.00	1.00	1.00	1.00	1.00	1.00	1.00	1.00	1.00	0.00
MLF Adj:	1.00	1.00	1.00	1.00	1.00	1.00	1.00	1.00	1.00	1.00	1.00	0.00
FinalVolume:	0	0	0	47	0	608	0	2930	784	0	2369	0
Saturation Flow Module:												
Sat/Lane:	1900	1900	1900	1900	1900	1900	1900	1900	1900	1900	1900	1900
Adjustment:	1.00	1.00	1.00	0.95	1.00	0.75	1.00	0.91	0.85	1.00	0.91	1.00
Lanes:	0.00	0.00	0.00	1.00	0.00	2.00	0.00	3.00	1.00	0.00	3.00	1.00
Final Sat.:	0	0	0	1809	0	2842	0	5187	1615	0	5187	1900
Capacity Analysis Module:												
Vol/Sat:	0.00	0.00	0.00	0.03	0.00	0.21	0.00	0.56	0.49	0.00	0.46	0.00
Crit Moves:						****		****		****		
Green/Cycle:	0.00	0.00	0.00	0.27	0.00	0.27	0.00	0.73	0.73	0.00	0.73	0.00
Volume/Cap:	0.00	0.00	0.00	0.09	0.00	0.78	0.00	0.78	0.67	0.00	0.63	0.00
Delay/Veh:	0.0	0.0	0.0	27.1	0.0	38.5	0.0	9.8	8.8	0.0	7.3	0.0
User DelAdj:	1.00	1.00	1.00	1.00	1.00	1.00	1.00	1.00	1.00	1.00	1.00	1.00
AdjDel/Veh:	0.0	0.0	0.0	27.1	0.0	38.5	0.0	9.8	8.8	0.0	7.3	0.0
LOS by Move:	A	A	A	C	A	D	A	A	A	A	A	A
HCM2kAvgQ:	0	0	0	1	0	12	0	22	14	0	14	0

Note: Queue reported is the number of cars per lane.

City of Murrieta General Plan
Future Proposed General Plan
PM Peak Hour

Level Of Service Computation Report
2000 HCM Operations Method (Future Volume Alternative)

Intersection #20 I-215 NB Off Ramp & Clinton Keith Road

Cycle (sec): 100 Critical Vol./Cap.(X): 0.851
Loss Time (sec): 0 (Y+R=4.0 sec) Average Delay (sec/veh): 17.1
Optimal Cycle: 153 Level Of Service: B

Street Name:	I-215 NB Off Ramp						Clinton Keith Road					
Approach:	North Bound			South Bound			East Bound			West Bound		
Movement:	L	T	R	L	T	R	L	T	R	L	T	R
Control:	Split Phase			Split Phase			Protected			Protected		
Rights:	Include			Include			Include			Ignore		
Min. Green:	0	0	0	0	0	0	0	0	0	0	0	0
Lanes:	1	0 0	0 1	0	0 0	0 0	0	0 3	0 1	0	0 3	0 1
Volume Module:												
Base Vol:	409	0	492	0	0	0	0	1562	280	0	2836	314
Growth Adj:	1.00	1.00	1.00	1.00	1.00	1.00	1.00	1.00	1.00	1.00	1.00	1.00
Initial Bse:	409	0	492	0	0	0	0	1562	280	0	2836	314
Added Vol:	0	0	0	0	0	0	0	0	0	0	0	0
PasserByVol:	0	0	0	0	0	0	0	0	0	0	0	0
Initial Fut:	409	0	492	0	0	0	0	1562	280	0	2836	314
User Adj:	1.00	1.00	1.00	1.00	1.00	1.00	1.00	1.00	1.00	1.00	1.00	0.00
PHF Adj:	1.00	1.00	1.00	1.00	1.00	1.00	1.00	1.00	1.00	1.00	1.00	0.00
PHF Volume:	409	0	492	0	0	0	0	1562	280	0	2836	0
Reduct Vol:	0	0	0	0	0	0	0	0	0	0	0	0
Reduced Vol:	409	0	492	0	0	0	0	1562	280	0	2836	0
PCE Adj:	1.00	1.00	1.00	1.00	1.00	1.00	1.00	1.00	1.00	1.00	1.00	0.00
MLF Adj:	1.00	1.00	1.00	1.00	1.00	1.00	1.00	1.00	1.00	1.00	1.00	0.00
FinalVolume:	409	0	492	0	0	0	0	1562	280	0	2836	0
Saturation Flow Module:												
Sat/Lane:	1900	1900	1900	1900	1900	1900	1900	1900	1900	1900	1900	1900
Adjustment:	0.95	1.00	0.85	1.00	1.00	1.00	1.00	0.91	0.85	1.00	0.91	1.00
Lanes:	1.00	0.00	1.00	0.00	0.00	0.00	0.00	3.00	1.00	0.00	3.00	1.00
Final Sat.:	1805	0	1615	0	0	0	0	5187	1615	0	5187	1900
Capacity Analysis Module:												
Vol/Sat:	0.23	0.00	0.30	0.00	0.00	0.00	0.00	0.30	0.17	0.00	0.55	0.00
Crit Moves:			****				****				****	
Green/Cycle:	0.36	0.00	0.36	0.00	0.00	0.00	0.00	0.64	0.64	0.00	0.64	0.00
Volume/Cap:	0.63	0.00	0.85	0.00	0.00	0.00	0.00	0.47	0.27	0.00	0.85	0.00
Delay/Veh:	28.7	0.0	41.2	0.0	0.0	0.0	0.0	9.3	7.9	0.0	16.4	0.0
User DelAdj:	1.00	1.00	1.00	1.00	1.00	1.00	1.00	1.00	1.00	1.00	1.00	1.00
AdjDel/Veh:	28.7	0.0	41.2	0.0	0.0	0.0	0.0	9.3	7.9	0.0	16.4	0.0
LOS by Move:	C	A	D	A	A	A	A	A	A	A	B	A
HCM2kAvgQ:	11	0	17	0	0	0	0	9	4	0	28	0

Note: Queue reported is the number of cars per lane.

City of Murrieta General Plan
Future Proposed General Plan
PM Peak Hour

Level Of Service Computation Report
2000 HCM Operations Method (Future Volume Alternative)

Intersection #21 Antelope Road & Clinton Keith Road

Cycle (sec): 100 Critical Vol./Cap.(X): 0.495
Loss Time (sec): 0 (Y+R=4.0 sec) Average Delay (sec/veh): 4.5
Optimal Cycle: 45 Level Of Service: A

Street Name:	Antelope Road						Clinton Keith Road					
Approach:	North Bound			South Bound			East Bound			West Bound		
Movement:	L	T	R	L	T	R	L	T	R	L	T	R
Control:	Protected			Protected			Protected			Protected		
Rights:	Include			Ignore			Include			Include		
Min. Green:	0	0	0	0	0	0	0	0	0	0	0	0
Lanes:	0 0	0 0	0	2 0	0 0	2	2 0	3 0	0	0 0	2 1	0
Volume Module:												
Base Vol:	0	0	0	174	0	916	117	2128	0	0	1645	427
Growth Adj:	1.00	1.00	1.00	1.00	1.00	1.00	1.00	1.00	1.00	1.00	1.00	1.00
Initial Bse:	0	0	0	174	0	916	117	2128	0	0	1645	427
Added Vol:	0	0	0	0	0	0	0	0	0	0	0	0
PasserByVol:	0	0	0	0	0	0	0	0	0	0	0	0
Initial Fut:	0	0	0	174	0	916	117	2128	0	0	1645	427
User Adj:	1.00	1.00	1.00	1.00	1.00	0.00	1.00	1.00	1.00	1.00	1.00	1.00
PHF Adj:	1.00	1.00	1.00	1.00	1.00	0.00	1.00	1.00	1.00	1.00	1.00	1.00
PHF Volume:	0	0	0	174	0	0	117	2128	0	0	1645	427
Reduct Vol:	0	0	0	0	0	0	0	0	0	0	0	0
Reduced Vol:	0	0	0	174	0	0	117	2128	0	0	1645	427
PCE Adj:	1.00	1.00	1.00	1.00	1.00	0.00	1.00	1.00	1.00	1.00	1.00	1.00
MLF Adj:	1.00	1.00	1.00	1.00	1.00	0.00	1.00	1.00	1.00	1.00	1.00	1.00
FinalVolume:	0	0	0	174	0	0	117	2128	0	0	1645	427
Saturation Flow Module:												
Sat/Lane:	1900	1900	1900	1900	1900	1900	1900	1900	1900	1900	1900	1900
Adjustment:	1.00	1.00	1.00	0.92	1.00	0.88	0.92	0.91	1.00	1.00	0.88	0.88
Lanes:	0.00	0.00	0.00	2.00	0.00	2.00	2.00	3.00	0.00	0.00	2.38	0.62
Final Sat.:	0	0	0	3502	0	3344	3502	5187	0	0	3990	1036
Capacity Analysis Module:												
Vol/Sat:	0.00	0.00	0.00	0.05	0.00	0.00	0.03	0.41	0.00	0.00	0.41	0.41
Crit Moves:				****			****				****	
Green/Cycle:	0.00	0.00	0.00	0.10	0.00	0.00	0.07	0.90	0.00	0.00	0.83	0.83
Volume/Cap:	0.00	0.00	0.00	0.50	0.00	0.00	0.50	0.46	0.00	0.00	0.50	0.50
Delay/Veh:	0.0	0.0	0.0	43.7	0.0	0.0	46.6	0.9	0.0	0.0	2.5	2.5
User DelAdj:	1.00	1.00	1.00	1.00	1.00	1.00	1.00	1.00	1.00	1.00	1.00	1.00
AdjDel/Veh:	0.0	0.0	0.0	43.7	0.0	0.0	46.6	0.9	0.0	0.0	2.5	2.5
LOS by Move:	A	A	A	D	A	A	D	A	A	A	A	A
HCM2kAvgQ:	0	0	0	3	0	0	2	5	0	0	7	7

Note: Queue reported is the number of cars per lane.

City of Murrieta General Plan
Future Proposed General Plan
PM Peak Hour

Level Of Service Computation Report
2000 HCM Operations Method (Future Volume Alternative)

Intersection #23 Liberty Road & Clinton Keith Road

Cycle (sec): 100 Critical Vol./Cap.(X): 0.719
Loss Time (sec): 0 (Y+R=4.0 sec) Average Delay (sec/veh): 10.0
Optimal Cycle: 81 Level Of Service: B

Street Name:	Liberty Road						Clinton Keith Road					
Approach:	North Bound			South Bound			East Bound			West Bound		
Movement:	L	T	R	L	T	R	L	T	R	L	T	R
Control:	Protected			Protected			Protected			Protected		
Rights:	Include			Include			Include			Include		
Min. Green:	0	0	0	0	0	0	0	0	0	0	0	0
Lanes:	2	0	0	0	1	0	0	0	0	0	0	0
	0	0	2	1	0	1	0	3	0	0		
Volume Module:												
Base Vol:	81	0	286	0	0	0	0	2323	323	41	2078	0
Growth Adj:	1.00	1.00	1.00	1.00	1.00	1.00	1.00	1.00	1.00	1.00	1.00	1.00
Initial Bse:	81	0	286	0	0	0	0	2323	323	41	2078	0
Added Vol:	0	0	0	0	0	0	0	0	0	0	0	0
PasserByVol:	0	0	0	0	0	0	0	0	0	0	0	0
Initial Fut:	81	0	286	0	0	0	0	2323	323	41	2078	0
User Adj:	1.00	1.00	1.00	1.00	1.00	1.00	1.00	1.00	1.00	1.00	1.00	1.00
PHF Adj:	1.00	1.00	1.00	1.00	1.00	1.00	1.00	1.00	1.00	1.00	1.00	1.00
PHF Volume:	81	0	286	0	0	0	0	2323	323	41	2078	0
Reduct Vol:	0	0	0	0	0	0	0	0	0	0	0	0
Reduced Vol:	81	0	286	0	0	0	0	2323	323	41	2078	0
PCE Adj:	1.00	1.00	1.00	1.00	1.00	1.00	1.00	1.00	1.00	1.00	1.00	1.00
MLF Adj:	1.00	1.00	1.00	1.00	1.00	1.00	1.00	1.00	1.00	1.00	1.00	1.00
FinalVolume:	81	0	286	0	0	0	0	2323	323	41	2078	0
Saturation Flow Module:												
Sat/Lane:	1900	1900	1900	1900	1900	1900	1900	1900	1900	1900	1900	1900
Adjustment:	0.92	1.00	0.85	1.00	1.00	1.00	1.00	0.89	0.89	0.95	0.91	1.00
Lanes:	2.00	0.00	1.00	0.00	0.00	0.00	0.00	2.63	0.37	1.00	3.00	0.00
Final Sat.:	3502	0	1615	0	0	0	0	4472	622	1805	5187	0
Capacity Analysis Module:												
Vol/Sat:	0.02	0.00	0.18	0.00	0.00	0.00	0.00	0.52	0.52	0.02	0.40	0.00
Crit Moves:			****					****		****		
Green/Cycle:	0.25	0.00	0.25	0.00	0.00	0.00	0.00	0.72	0.72	0.03	0.75	0.00
Volume/Cap:	0.09	0.00	0.72	0.00	0.00	0.00	0.00	0.72	0.72	0.72	0.53	0.00
Delay/Veh:	29.1	0.0	40.8	0.0	0.0	0.0	0.0	8.7	8.7	83.7	5.2	0.0
User DelAdj:	1.00	1.00	1.00	1.00	1.00	1.00	1.00	1.00	1.00	1.00	1.00	1.00
AdjDel/Veh:	29.1	0.0	40.8	0.0	0.0	0.0	0.0	8.7	8.7	83.7	5.2	0.0
LOS by Move:	C	A	D	A	A	A	A	A	A	F	A	A
HCM2kAvgQ:	1	0	9	0	0	0	0	18	18	3	10	0

Note: Queue reported is the number of cars per lane.

City of Murrieta General Plan
Future Proposed General Plan
PM Peak Hour

Level Of Service Computation Report
2000 HCM Operations Method (Future Volume Alternative)

Intersection #24 Leon Road & Clinton Keith Road

Cycle (sec): 100 Critical Vol./Cap.(X): 0.972
Loss Time (sec): 0 (Y+R=4.0 sec) Average Delay (sec/veh): 28.6
Optimal Cycle: 180 Level Of Service: C

Street Name:	Leon Road						Clinton Keith Road					
Approach:	North Bound			South Bound			East Bound			West Bound		
Movement:	L	T	R	L	T	R	L	T	R	L	T	R
Control:	Protected			Protected			Protected			Protected		
Rights:	Include			Ovl			Include			Include		
Min. Green:	0	0	0	0	0	0	0	0	0	0	0	0
Lanes:	0	0	0	0	0	1	0	0	0	2	2	0
	3	0	0	0	0	3	0	1				
Volume Module:												
Base Vol:	0	0	0	143	0	1218	638	1950	0	0	913	877
Growth Adj:	1.00	1.00	1.00	1.00	1.00	1.00	1.00	1.00	1.00	1.00	1.00	1.00
Initial Bse:	0	0	0	143	0	1218	638	1950	0	0	913	877
Added Vol:	0	0	0	0	0	0	0	0	0	0	0	0
PasserByVol:	0	0	0	0	0	0	0	0	0	0	0	0
Initial Fut:	0	0	0	143	0	1218	638	1950	0	0	913	877
User Adj:	1.00	1.00	1.00	1.00	1.00	1.00	1.00	1.00	1.00	1.00	1.00	1.00
PHF Adj:	1.00	1.00	1.00	1.00	1.00	1.00	1.00	1.00	1.00	1.00	1.00	1.00
PHF Volume:	0	0	0	143	0	1218	638	1950	0	0	913	877
Reduct Vol:	0	0	0	0	0	0	0	0	0	0	0	0
Reduced Vol:	0	0	0	143	0	1218	638	1950	0	0	913	877
PCE Adj:	1.00	1.00	1.00	1.00	1.00	1.00	1.00	1.00	1.00	1.00	1.00	1.00
MLF Adj:	1.00	1.00	1.00	1.00	1.00	1.00	1.00	1.00	1.00	1.00	1.00	1.00
FinalVolume:	0	0	0	143	0	1218	638	1950	0	0	913	877
Saturation Flow Module:												
Sat/Lane:	1900	1900	1900	1900	1900	1900	1900	1900	1900	1900	1900	1900
Adjustment:	1.00	1.00	1.00	0.95	1.00	0.75	0.92	0.91	1.00	1.00	0.91	0.85
Lanes:	0.00	0.00	0.00	1.00	0.00	2.00	2.00	3.00	0.00	0.00	3.00	1.00
Final Sat.:	0	0	0	1805	0	2842	3502	5187	0	0	5187	1615
Capacity Analysis Module:												
Vol/Sat:	0.00	0.00	0.00	0.08	0.00	0.43	0.18	0.38	0.00	0.00	0.18	0.54
Crit Moves:						****	****					****
Green/Cycle:	0.00	0.00	0.00	0.25	0.00	0.44	0.19	0.75	0.00	0.00	0.56	0.56
Volume/Cap:	0.00	0.00	0.00	0.31	0.00	0.97	0.97	0.50	0.00	0.00	0.31	0.97
Delay/Veh:	0.0	0.0	0.0	30.7	0.0	46.2	68.4	5.3	0.0	0.0	11.9	44.4
User DelAdj:	1.00	1.00	1.00	1.00	1.00	1.00	1.00	1.00	1.00	1.00	1.00	1.00
AdjDel/Veh:	0.0	0.0	0.0	30.7	0.0	46.2	68.4	5.3	0.0	0.0	11.9	44.4
LOS by Move:	A	A	A	C	A	D	E	A	A	A	B	D
HCM2kAvgQ:	0	0	0	4	0	27	15	9	0	0	5	33

Note: Queue reported is the number of cars per lane.

City of Murrieta General Plan
Future Proposed General Plan
PM Peak Hour

Level Of Service Computation Report
2000 HCM Operations Method (Future Volume Alternative)

Intersection #25 Winchester Road - SR-79 & Benton Road

Cycle (sec): 100 | Critical Vol./Cap.(X): 1.057
Loss Time (sec): 0 (Y+R=4.0 sec) | Average Delay (sec/veh): 53.7
Optimal Cycle: 180 | Level Of Service: D

Street Name:	Winchester Road - SR-79						Benton Road					
Approach:	North Bound			South Bound			East Bound			West Bound		
Movement:	L	T	R	L	T	R	L	T	R	L	T	R
Control:	Protected			Protected			Protected			Protected		
Rights:	Include			Include			Include			Include		
Min. Green:	0	0	0	0	0	0	0	0	0	0	0	0
Lanes:	2	0 3	0 1	2	0 3	0 1	2	0 2	0 2	2	0 2	0 1
Volume Module:												
Base Vol:	462	2486	738	75	1004	485	83	704	1387	241	720	92
Growth Adj:	1.00	1.00	1.00	1.00	1.00	1.00	1.00	1.00	1.00	1.00	1.00	1.00
Initial Bse:	462	2486	738	75	1004	485	83	704	1387	241	720	92
Added Vol:	0	0	0	0	0	0	0	0	0	0	0	0
PasserByVol:	0	0	0	0	0	0	0	0	0	0	0	0
Initial Fut:	462	2486	738	75	1004	485	83	704	1387	241	720	92
User Adj:	1.00	1.00	1.00	1.00	1.00	1.00	1.00	1.00	1.00	1.00	1.00	1.00
PHF Adj:	1.00	1.00	1.00	1.00	1.00	1.00	1.00	1.00	1.00	1.00	1.00	1.00
PHF Volume:	462	2486	738	75	1004	485	83	704	1387	241	720	92
Reduct Vol:	0	0	0	0	0	0	0	0	0	0	0	0
Reduced Vol:	462	2486	738	75	1004	485	83	704	1387	241	720	92
PCE Adj:	1.00	1.00	1.00	1.00	1.00	1.00	1.00	1.00	1.00	1.00	1.00	1.00
MLF Adj:	1.00	1.00	1.00	1.00	1.00	1.00	1.00	1.00	1.00	1.00	1.00	1.00
FinalVolume:	462	2486	738	75	1004	485	83	704	1387	241	720	92
Saturation Flow Module:												
Sat/Lane:	1900	1900	1900	1900	1900	1900	1900	1900	1900	1900	1900	1900
Adjustment:	0.92	0.91	0.85	0.92	0.91	0.85	0.92	0.95	0.75	0.92	0.95	0.85
Lanes:	2.00	3.00	1.00	2.00	3.00	1.00	2.00	2.00	2.00	2.00	2.00	1.00
Final Sat.:	3502	5187	1615	3502	5187	1615	3502	3610	2842	3502	3610	1615
Capacity Analysis Module:												
Vol/Sat:	0.13	0.48	0.46	0.02	0.19	0.30	0.02	0.20	0.49	0.07	0.20	0.06
Crit Moves:		****		****					****	****		
Green/Cycle:	0.14	0.45	0.45	0.02	0.33	0.33	0.06	0.46	0.46	0.07	0.47	0.47
Volume/Cap:	0.91	1.06	1.01	1.06	0.59	0.91	0.42	0.42	1.06	1.06	0.42	0.12
Delay/Veh:	63.1	63.3	62.7	172.6	28.5	52.4	47.1	18.2	68.5	122.3	17.7	14.9
User DelAdj:	1.00	1.00	1.00	1.00	1.00	1.00	1.00	1.00	1.00	1.00	1.00	1.00
AdjDel/Veh:	63.1	63.3	62.7	172.6	28.5	52.4	47.1	18.2	68.5	122.3	17.7	14.9
LOS by Move:	E	E	E	F	C	D	D	B	E	F	B	B
HCM2kAvgQ:	11	39	30	3	10	18	2	8	35	8	8	2

Note: Queue reported is the number of cars per lane.

City of Murrieta General Plan
Future Proposed General Plan
PM Peak Hour

Level Of Service Computation Report
2000 HCM Operations Method (Future Volume Alternative)

Intersection #26 Winchester Road - SR-79 & Via Mira Mosa

Cycle (sec): 100 | Critical Vol./Cap.(X): 0.965
Loss Time (sec): 0 (Y+R=4.0 sec) | Average Delay (sec/veh): 25.1
Optimal Cycle: 180 | Level Of Service: C

Street Name:	Winchester Road - SR-79						Via Mira Mosa					
Approach:	North Bound			South Bound			East Bound			West Bound		
Movement:	L	T	R	L	T	R	L	T	R	L	T	R
Control:	Protected			Protected			Protected			Protected		
Rights:	Include			Include			Include			Include		
Min. Green:	0	0	0	0	0	0	0	0	0	0	0	0
Lanes:	1	0 2	1 0	1	0 2	1 0	1	0 0	1 0	1	0 0	1 0
Volume Module:												
Base Vol:	69	3255	228	107	2094	356	229	28	54	229	40	129
Growth Adj:	1.00	1.00	1.00	1.00	1.00	1.00	1.00	1.00	1.00	1.00	1.00	1.00
Initial Bse:	69	3255	228	107	2094	356	229	28	54	229	40	129
Added Vol:	0	0	0	0	0	0	0	0	0	0	0	0
PasserByVol:	0	0	0	0	0	0	0	0	0	0	0	0
Initial Fut:	69	3255	228	107	2094	356	229	28	54	229	40	129
User Adj:	1.00	1.00	1.00	1.00	1.00	1.00	1.00	1.00	1.00	1.00	1.00	1.00
PHF Adj:	1.00	1.00	1.00	1.00	1.00	1.00	1.00	1.00	1.00	1.00	1.00	1.00
PHF Volume:	69	3255	228	107	2094	356	229	28	54	229	40	129
Reduct Vol:	0	0	0	0	0	0	0	0	0	0	0	0
Reduced Vol:	69	3255	228	107	2094	356	229	28	54	229	40	129
PCE Adj:	1.00	1.00	1.00	1.00	1.00	1.00	1.00	1.00	1.00	1.00	1.00	1.00
MLF Adj:	1.00	1.00	1.00	1.00	1.00	1.00	1.00	1.00	1.00	1.00	1.00	1.00
FinalVolume:	69	3255	228	107	2094	356	229	28	54	229	40	129
Saturation Flow Module:												
Sat/Lane:	1900	1900	1900	1900	1900	1900	1900	1900	1900	1900	1900	1900
Adjustment:	0.95	0.90	0.90	0.95	0.89	0.89	0.95	0.90	0.90	0.95	0.89	0.89
Lanes:	1.00	2.80	0.20	1.00	2.56	0.44	1.00	0.34	0.66	1.00	0.24	0.76
Final Sat.:	1805	4799	336	1805	4336	737	1805	585	1127	1805	398	1285
Capacity Analysis Module:												
Vol/Sat:	0.04	0.68	0.68	0.06	0.48	0.48	0.13	0.05	0.05	0.13	0.10	0.10
Crit Moves:		****		****			****				****	
Green/Cycle:	0.06	0.70	0.70	0.06	0.71	0.71	0.13	0.06	0.06	0.17	0.10	0.10
Volume/Cap:	0.68	0.96	0.96	0.96	0.68	0.68	0.96	0.74	0.74	0.74	0.96	0.96
Delay/Veh:	63.7	22.1	22.1	120.8	8.8	8.8	91.6	69.3	69.3	48.7	102	102.1
User DelAdj:	1.00	1.00	1.00	1.00	1.00	1.00	1.00	1.00	1.00	1.00	1.00	1.00
AdjDel/Veh:	63.7	22.1	22.1	120.8	8.8	8.8	91.6	69.3	69.3	48.7	102	102.1
LOS by Move:	E	C	C	F	A	A	F	E	E	D	F	F
HCM2kAvgQ:	3	43	43	6	16	16	11	4	4	8	9	9

Note: Queue reported is the number of cars per lane.

City of Murrieta General Plan
Future Proposed General Plan
PM Peak Hour

Level Of Service Computation Report
2000 HCM Operations Method (Future Volume Alternative)

Intersection #27 Monroe Ave & Los Alamos

Cycle (sec): 100 Critical Vol./Cap.(X): 0.785
Loss Time (sec): 0 (Y+R=4.0 sec) Average Delay (sec/veh): 27.5
Optimal Cycle: 106 Level Of Service: C

Street Name:	Monroe Ave						Los Alamos					
Approach:	North Bound			South Bound			East Bound			West Bound		
Movement:	L -	T -	R	L -	T -	R	L -	T -	R	L -	T -	R
Control:	Protected			Protected			Protected			Protected		
Rights:	Include			Include			Include			Include		
Min. Green:	0	0	0	0	0	0	0	0	0	0	0	0
Lanes:	1 0	1	1 0	2 0	2	0 1	1 0	1	1 0	1 0	2	0 1
Volume Module:												
Base Vol:	29	469	264	235	281	61	229	1460	165	84	975	467
Growth Adj:	1.00	1.00	1.00	1.00	1.00	1.00	1.00	1.00	1.00	1.00	1.00	1.00
Initial Bse:	29	469	264	235	281	61	229	1460	165	84	975	467
Added Vol:	0	0	0	0	0	0	0	0	0	0	0	0
PasserByVol:	0	0	0	0	0	0	0	0	0	0	0	0
Initial Fut:	29	469	264	235	281	61	229	1460	165	84	975	467
User Adj:	1.00	1.00	1.00	1.00	1.00	1.00	1.00	1.00	1.00	1.00	1.00	1.00
PHF Adj:	1.00	1.00	1.00	1.00	1.00	1.00	1.00	1.00	1.00	1.00	1.00	1.00
PHF Volume:	29	469	264	235	281	61	229	1460	165	84	975	467
Reduct Vol:	0	0	0	0	0	0	0	0	0	0	0	0
Reduced Vol:	29	469	264	235	281	61	229	1460	165	84	975	467
PCE Adj:	1.00	1.00	1.00	1.00	1.00	1.00	1.00	1.00	1.00	1.00	1.00	1.00
MLF Adj:	1.00	1.00	1.00	1.00	1.00	1.00	1.00	1.00	1.00	1.00	1.00	1.00
FinalVolume:	29	469	264	235	281	61	229	1460	165	84	975	467
Saturation Flow Module:												
Sat/Lane:	1900	1900	1900	1900	1900	1900	1900	1900	1900	1900	1900	1900
Adjustment:	0.95	0.90	0.90	0.92	0.95	0.85	0.95	0.94	0.94	0.95	0.95	0.85
Lanes:	1.00	1.28	0.72	2.00	2.00	1.00	1.00	1.80	0.20	1.00	2.00	1.00
Final Sat.:	1805	2185	1230	3502	3610	1615	1805	3195	361	1805	3610	1615
Capacity Analysis Module:												
Vol/Sat:	0.02	0.21	0.21	0.07	0.08	0.04	0.13	0.46	0.46	0.05	0.27	0.29
Crit Moves:		****		****				****		****		
Green/Cycle:	0.06	0.27	0.27	0.09	0.30	0.30	0.20	0.58	0.58	0.06	0.45	0.45
Volume/Cap:	0.26	0.79	0.79	0.79	0.26	0.13	0.65	0.79	0.79	0.79	0.61	0.65
Delay/Veh:	46.0	38.1	38.1	57.6	26.9	25.8	41.3	18.1	18.1	77.2	21.7	23.7
User DelAdj:	1.00	1.00	1.00	1.00	1.00	1.00	1.00	1.00	1.00	1.00	1.00	1.00
AdjDel/Veh:	46.0	38.1	38.1	57.6	26.9	25.8	41.3	18.1	18.1	77.2	21.7	23.7
LOS by Move:	D	D	D	E	C	C	D	B	B	E	C	C
HCM2kAvgQ:	1	13	13	6	3	1	8	22	22	4	12	12

Note: Queue reported is the number of cars per lane.

City of Murrieta General Plan
Future Proposed General Plan
PM Peak Hour

Level Of Service Computation Report
2000 HCM Operations Method (Future Volume Alternative)

Intersection #28 Jefferson Avenue & Murrieta Hot Springs Road

Cycle (sec): 100 Critical Vol./Cap.(X): 1.829
Loss Time (sec): 0 (Y+R=4.0 sec) Average Delay (sec/veh): 206.4
Optimal Cycle: 180 Level Of Service: F

Street Name:	Jefferson Avenue						Murrieta Hot Springs Road					
Approach:	North Bound			South Bound			East Bound			West Bound		
Movement:	L -	T -	R	L -	T -	R	L -	T -	R	L -	T -	R
Control:	Protected			Protected			Protected			Protected		
Rights:	Include			Include			Include			Include		
Min. Green:	0	0	0	0	0	0	0	0	0	0	0	0
Lanes:	1 0	3	0 1	1 0	2	1 0	1 0	2	1 0	1 0	2	1 0
Volume Module:												
Base Vol:	6	2300	1226	814	1025	70	40	210	111	581	90	891
Growth Adj:	1.00	1.00	1.00	1.00	1.00	1.00	1.00	1.00	1.00	1.00	1.00	1.00
Initial Bse:	6	2300	1226	814	1025	70	40	210	111	581	90	891
Added Vol:	0	0	0	0	0	0	0	0	0	0	0	0
PasserByVol:	0	0	0	0	0	0	0	0	0	0	0	0
Initial Fut:	6	2300	1226	814	1025	70	40	210	111	581	90	891
User Adj:	1.00	1.00	1.00	1.00	1.00	1.00	1.00	1.00	1.00	1.00	1.00	1.00
PHF Adj:	1.00	1.00	1.00	1.00	1.00	1.00	1.00	1.00	1.00	1.00	1.00	1.00
PHF Volume:	6	2300	1226	814	1025	70	40	210	111	581	90	891
Reduct Vol:	0	0	0	0	0	0	0	0	0	0	0	0
Reduced Vol:	6	2300	1226	814	1025	70	40	210	111	581	90	891
PCE Adj:	1.00	1.00	1.00	1.00	1.00	1.00	1.00	1.00	1.00	1.00	1.00	1.00
MLF Adj:	1.00	1.00	1.00	1.00	1.00	1.00	1.00	1.00	1.00	1.00	1.00	1.00
FinalVolume:	6	2300	1226	814	1025	70	40	210	111	581	90	891
Saturation Flow Module:												
Sat/Lane:	1900	1900	1900	1900	1900	1900	1900	1900	1900	1900	1900	1900
Adjustment:	0.95	0.91	0.85	0.95	0.90	0.90	0.95	0.86	0.86	0.95	0.79	0.79
Lanes:	1.00	3.00	1.00	1.00	2.81	0.19	1.00	2.00	1.00	1.00	2.00	1.00
Final Sat.:	1805	5187	1615	1805	4807	328	1805	3278	1639	1805	2988	1494
Capacity Analysis Module:												
Vol/Sat:	0.00	0.44	0.76	0.45	0.21	0.21	0.02	0.06	0.07	0.32	0.03	0.60
Crit Moves:			****	****			****					****
Green/Cycle:	0.01	0.42	0.42	0.25	0.65	0.65	0.01	0.06	0.06	0.28	0.33	0.33
Volume/Cap:	0.33	1.07	1.83	1.83	0.33	0.33	1.83	1.09	1.15	1.15	0.09	1.83
Delay/Veh:	59.3	69.8	408.0	419.3	7.8	7.8	556.0	126	148.4	125.1	23.4	413.9
User DelAdj:	1.00	1.00	1.00	1.00	1.00	1.00	1.00	1.00	1.00	1.00	1.00	1.00
AdjDel/Veh:	59.3	69.8	408.0	419.3	7.8	7.8	556.0	126	148.4	125.1	23.4	413.9
LOS by Move:	E	E	F	F	A	A	F	F	F	F	C	F
HCM2kAvgQ:	1	38	106	71	5	5	5	8	8	31	1	85

Note: Queue reported is the number of cars per lane.

City of Murrieta General Plan
Future Proposed General Plan
PM Peak Hour

Level Of Service Computation Report
2000 HCM Operations Method (Future Volume Alternative)

Intersection #29 Madison Avenue & Murrieta Hot Springs Road

Cycle (sec): 100 Critical Vol./Cap.(X): 1.342
Loss Time (sec): 0 (Y+R=4.0 sec) Average Delay (sec/veh): 129.6
Optimal Cycle: 180 Level Of Service: F

Street Name:	Madison Avenue						Murrieta Hot Springs Road					
Approach:	North Bound			South Bound			East Bound			West Bound		
Movement:	L -	T -	R	L -	T -	R	L -	T -	R	L -	T -	R
Control:	Protected			Protected			Protected			Protected		
Rights:	Include			Include			Include			Include		
Min. Green:	0	0	0	0	0	0	0	0	0	0	0	0
Lanes:	2 0	2 0	1	2 0	1 1	0	2 0	3 1	0	2 0	3 0	1
Volume Module:												
Base Vol:	316	600	1218	342	247	116	346	1505	279	791	1185	189
Growth Adj:	1.00	1.00	1.00	1.00	1.00	1.00	1.00	1.00	1.00	1.00	1.00	1.00
Initial Bse:	316	600	1218	342	247	116	346	1505	279	791	1185	189
Added Vol:	0	0	0	0	0	0	0	0	0	0	0	0
PasserByVol:	0	0	0	0	0	0	0	0	0	0	0	0
Initial Fut:	316	600	1218	342	247	116	346	1505	279	791	1185	189
User Adj:	1.00	1.00	1.00	1.00	1.00	1.00	1.00	1.00	1.00	1.00	1.00	1.00
PHF Adj:	1.00	1.00	1.00	1.00	1.00	1.00	1.00	1.00	1.00	1.00	1.00	1.00
PHF Volume:	316	600	1218	342	247	116	346	1505	279	791	1185	189
Reduct Vol:	0	0	0	0	0	0	0	0	0	0	0	0
Reduced Vol:	316	600	1218	342	247	116	346	1505	279	791	1185	189
PCE Adj:	1.00	1.00	1.00	1.00	1.00	1.00	1.00	1.00	1.00	1.00	1.00	1.00
MLF Adj:	1.00	1.00	1.00	1.00	1.00	1.00	1.00	1.00	1.00	1.00	1.00	1.00
FinalVolume:	316	600	1218	342	247	116	346	1505	279	791	1185	189
Saturation Flow Module:												
Sat/Lane:	1900	1900	1900	1900	1900	1900	1900	1900	1900	1900	1900	1900
Adjustment:	0.92	0.95	0.85	0.92	0.90	0.90	0.92	0.89	0.89	0.92	0.91	0.85
Lanes:	2.00	2.00	1.00	2.00	1.36	0.64	2.00	3.37	0.63	2.00	3.00	1.00
Final Sat.:	3502	3610	1615	3502	2338	1098	3502	5700	1057	3502	5187	1615
Capacity Analysis Module:												
Vol/Sat:	0.09	0.17	0.75	0.10	0.11	0.11	0.10	0.26	0.26	0.23	0.23	0.12
Crit Moves:			****	****				****		****		
Green/Cycle:	0.29	0.56	0.56	0.07	0.34	0.34	0.11	0.20	0.20	0.17	0.25	0.25
Volume/Cap:	0.31	0.30	1.34	1.34	0.31	0.31	0.90	1.34	1.34	1.34	0.90	0.46
Delay/Veh:	27.7	11.6	183.1	224.1	24.3	24.3	66.6	199	199.1	206.6	44.3	32.3
User DelAdj:	1.00	1.00	1.00	1.00	1.00	1.00	1.00	1.00	1.00	1.00	1.00	1.00
AdjDel/Veh:	27.7	11.6	183.1	224.1	24.3	24.3	66.6	199	199.1	206.6	44.3	32.3
LOS by Move:	C	B	F	F	C	C	E	F	F	F	D	C
HCM2kAvgQ:	4	5	76	13	4	4	8	32	32	27	17	5

Note: Queue reported is the number of cars per lane.

City of Murrieta General Plan
Future Proposed General Plan
PM Peak Hour

Level Of Service Computation Report
2000 HCM Operations Method (Future Volume Alternative)

Intersection #30 I-15 SB Off-Ramp & Murrieta Hot Springs Road

Cycle (sec): 100 Critical Vol./Cap.(X): 0.729
Loss Time (sec): 0 (Y+R=4.0 sec) Average Delay (sec/veh): 14.3
Optimal Cycle: 84 Level Of Service: B

Street Name:	I-15 SB Off-Ramp						Murrieta Hot Springs Road					
Approach:	North Bound			South Bound			East Bound			West Bound		
Movement:	L -	T -	R	L -	T -	R	L -	T -	R	L -	T -	R
Control:	Protected			Protected			Protected			Protected		
Rights:	Include			Include			Ignore			Ignore		
Min. Green:	0	0	0	0	0	0	0	0	0	0	0	0
Lanes:	0 0	0 0	0	1 0	1! 0	1	0 0	3 0	1	0 0	3 0	1
Volume Module:												
Base Vol:	0	0	0	674	0	422	0	2533	487	0	2188	112
Growth Adj:	1.00	1.00	1.00	1.00	1.00	1.00	1.00	1.00	1.00	1.00	1.00	1.00
Initial Bse:	0	0	0	674	0	422	0	2533	487	0	2188	112
Added Vol:	0	0	0	0	0	0	0	0	0	0	0	0
PasserByVol:	0	0	0	0	0	0	0	0	0	0	0	0
Initial Fut:	0	0	0	674	0	422	0	2533	487	0	2188	112
User Adj:	1.00	1.00	1.00	1.00	1.00	1.00	1.00	1.00	0.00	1.00	1.00	0.00
PHF Adj:	1.00	1.00	1.00	1.00	1.00	1.00	1.00	1.00	0.00	1.00	1.00	0.00
PHF Volume:	0	0	0	674	0	422	0	2533	0	0	2188	0
Reduct Vol:	0	0	0	0	0	0	0	0	0	0	0	0
Reduced Vol:	0	0	0	674	0	422	0	2533	0	0	2188	0
PCE Adj:	1.00	1.00	1.00	1.00	1.00	1.00	1.00	1.00	0.00	1.00	1.00	0.00
MLF Adj:	1.00	1.00	1.00	1.00	1.00	1.00	1.00	1.00	0.00	1.00	1.00	0.00
FinalVolume:	0	0	0	674	0	422	0	2533	0	0	2188	0
Saturation Flow Module:												
Sat/Lane:	1900	1900	1900	1900	1900	1900	1900	1900	1900	1900	1900	1900
Adjustment:	1.00	1.00	1.00	0.91	1.00	0.91	1.00	0.91	1.00	1.00	0.91	1.00
Lanes:	0.00	0.00	0.00	1.61	0.00	1.39	0.00	3.00	1.00	0.00	3.00	1.00
Final Sat.:	0	0	0	2804	0	2405	0	5187	1900	0	5187	1900
Capacity Analysis Module:												
Vol/Sat:	0.00	0.00	0.00	0.24	0.00	0.18	0.00	0.49	0.00	0.00	0.42	0.00
Crit Moves:				****				****		****		
Green/Cycle:	0.00	0.00	0.00	0.33	0.00	0.33	0.00	0.67	0.00	0.00	0.67	0.00
Volume/Cap:	0.00	0.00	0.00	0.73	0.00	0.53	0.00	0.73	0.00	0.00	0.63	0.00
Delay/Veh:	0.0	0.0	0.0	31.4	0.0	27.5	0.0	11.4	0.0	0.0	9.8	0.0
User DelAdj:	1.00	1.00	1.00	1.00	1.00	1.00	1.00	1.00	1.00	1.00	1.00	1.00
AdjDel/Veh:	0.0	0.0	0.0	31.4	0.0	27.5	0.0	11.4	0.0	0.0	9.8	0.0
LOS by Move:	A	A	A	C	A	C	A	B	A	A	A	A
HCM2kAvgQ:	0	0	0	13	0	8	0	19	0	0	14	0

Note: Queue reported is the number of cars per lane.

City of Murrieta General Plan
Future Proposed General Plan
PM Peak Hour

Level Of Service Computation Report
2000 HCM Operations Method (Future Volume Alternative)

Intersection #31 I-15 NB Off-Ramp & Murrieta Hot Springs Road

Cycle (sec): 100 Critical Vol./Cap.(X): 0.560
Loss Time (sec): 0 (Y+R=4.0 sec) Average Delay (sec/veh): 7.9
Optimal Cycle: 52 Level Of Service: A

Street Name:	I-15 NB Off-Ramp						Murrieta Hot Springs Road					
Approach:	North Bound			South Bound			East Bound			West Bound		
Movement:	L	T	R	L	T	R	L	T	R	L	T	R
Control:	Protected			Protected			Protected			Protected		
Rights:	Include			Include			Ignore			Ignore		
Min. Green:	0	0	0	0	0	0	0	0	0	0	0	0
Lanes:	2	0 0	0 1	0	0 0	0 0	0	0 4	0 1	0	0 4	0 1
Volume Module:												
Base Vol:	213	0	239	0	0	0	0	2848	370	0	1582	1637
Growth Adj:	1.00	1.00	1.00	1.00	1.00	1.00	1.00	1.00	1.00	1.00	1.00	1.00
Initial Bse:	213	0	239	0	0	0	0	2848	370	0	1582	1637
Added Vol:	0	0	0	0	0	0	0	0	0	0	0	0
PasserByVol:	0	0	0	0	0	0	0	0	0	0	0	0
Initial Fut:	213	0	239	0	0	0	0	2848	370	0	1582	1637
User Adj:	1.00	1.00	1.00	1.00	1.00	1.00	1.00	1.00	0.00	1.00	1.00	0.00
PHF Adj:	1.00	1.00	1.00	1.00	1.00	1.00	1.00	1.00	0.00	1.00	1.00	0.00
PHF Volume:	213	0	239	0	0	0	0	2848	0	0	1582	0
Reduct Vol:	0	0	0	0	0	0	0	0	0	0	0	0
Reduced Vol:	213	0	239	0	0	0	0	2848	0	0	1582	0
PCE Adj:	1.00	1.00	1.00	1.00	1.00	1.00	1.00	1.00	0.00	1.00	1.00	0.00
MLF Adj:	1.00	1.00	1.00	1.00	1.00	1.00	1.00	1.00	0.00	1.00	1.00	0.00
FinalVolume:	213	0	239	0	0	0	0	2848	0	0	1582	0
Saturation Flow Module:												
Sat/Lane:	1900	1900	1900	1900	1900	1900	1900	1900	1900	1900	1900	1900
Adjustment:	0.92	1.00	0.85	1.00	1.00	1.00	1.00	0.91	1.00	1.00	0.91	1.00
Lanes:	2.00	0.00	1.00	0.00	0.00	0.00	0.00	4.00	1.00	0.00	4.00	1.00
Final Sat.:	3502	0	1615	0	0	0	0	6916	1900	0	6916	1900
Capacity Analysis Module:												
Vol/Sat:	0.06	0.00	0.15	0.00	0.00	0.00	0.00	0.41	0.00	0.00	0.23	0.00
Crit Moves:			****					****		****		
Green/Cycle:	0.26	0.00	0.26	0.00	0.00	0.00	0.00	0.74	0.00	0.00	0.74	0.00
Volume/Cap:	0.23	0.00	0.56	0.00	0.00	0.00	0.00	0.56	0.00	0.00	0.31	0.00
Delay/Veh:	28.9	0.0	33.4	0.0	0.0	0.0	0.0	6.1	0.0	0.0	4.6	0.0
User DelAdj:	1.00	1.00	1.00	1.00	1.00	1.00	1.00	1.00	1.00	1.00	1.00	1.00
AdjDel/Veh:	28.9	0.0	33.4	0.0	0.0	0.0	0.0	6.1	0.0	0.0	4.6	0.0
LOS by Move:	C	A	C	A	A	A	A	A	A	A	A	A
HCM2kAvgQ:	3	0	7	0	0	0	0	11	0	0	5	0

Note: Queue reported is the number of cars per lane.

City of Murrieta General Plan
Future Proposed General Plan
PM Peak Hour

Level Of Service Computation Report
2000 HCM Operations Method (Future Volume Alternative)

Intersection #32 I-215 SB Off-Ramp & Murrieta Hot Springs Road

Cycle (sec): 100 Critical Vol./Cap.(X): 0.825
Loss Time (sec): 0 (Y+R=4.0 sec) Average Delay (sec/veh): 10.8
Optimal Cycle: 106 Level Of Service: B

Street Name:	I-215 SB Off-Ramp						Murrieta Hot Springs Road					
Approach:	North Bound			South Bound			East Bound			West Bound		
Movement:	L	T	R	L	T	R	L	T	R	L	T	R
Control:	Protected			Protected			Permitted			Permitted		
Rights:	Include			Include			Ignore			Ignore		
Min. Green:	0	0	0	0	0	0	0	0	0	0	0	0
Lanes:	0	0 0	0 0	1	0 1!	0 1	0	0 3	0 1	0	0 3	0 1
Volume Module:												
Base Vol:	0	0	0	470	0	362	0	3377	139	0	2338	238
Growth Adj:	1.00	1.00	1.00	1.00	1.00	1.00	1.00	1.00	1.00	1.00	1.00	1.00
Initial Bse:	0	0	0	470	0	362	0	3377	139	0	2338	238
Added Vol:	0	0	0	0	0	0	0	0	0	0	0	0
PasserByVol:	0	0	0	0	0	0	0	0	0	0	0	0
Initial Fut:	0	0	0	470	0	362	0	3377	139	0	2338	238
User Adj:	1.00	1.00	1.00	1.00	1.00	1.00	1.00	1.00	0.00	1.00	1.00	0.00
PHF Adj:	1.00	1.00	1.00	1.00	1.00	1.00	1.00	1.00	0.00	1.00	1.00	0.00
PHF Volume:	0	0	0	470	0	362	0	3377	0	0	2338	0
Reduct Vol:	0	0	0	0	0	0	0	0	0	0	0	0
Reduced Vol:	0	0	0	470	0	362	0	3377	0	0	2338	0
PCE Adj:	1.00	1.00	1.00	1.00	1.00	1.00	1.00	1.00	0.00	1.00	1.00	0.00
MLF Adj:	1.00	1.00	1.00	1.00	1.00	1.00	1.00	1.00	0.00	1.00	1.00	0.00
FinalVolume:	0	0	0	470	0	362	0	3377	0	0	2338	0
Saturation Flow Module:												
Sat/Lane:	1900	1900	1900	1900	1900	1900	1900	1900	1900	1900	1900	1900
Adjustment:	1.00	1.00	1.00	0.91	1.00	0.91	1.00	0.91	1.00	1.00	0.91	1.00
Lanes:	0.00	0.00	0.00	1.56	0.00	1.44	0.00	3.00	1.00	0.00	3.00	1.00
Final Sat.:	0	0	0	2705	0	2481	0	5187	1900	0	5187	1900
Capacity Analysis Module:												
Vol/Sat:	0.00	0.00	0.00	0.17	0.00	0.15	0.00	0.65	0.00	0.00	0.45	0.00
Crit Moves:				****				****				
Green/Cycle:	0.00	0.00	0.00	0.21	0.00	0.21	0.00	0.79	0.00	0.00	0.79	0.00
Volume/Cap:	0.00	0.00	0.00	0.82	0.00	0.69	0.00	0.82	0.00	0.00	0.57	0.00
Delay/Veh:	0.0	0.0	0.0	43.3	0.0	38.2	0.0	7.8	0.0	0.0	4.2	0.0
User DelAdj:	1.00	1.00	1.00	1.00	1.00	1.00	1.00	1.00	1.00	1.00	1.00	1.00
AdjDel/Veh:	0.0	0.0	0.0	43.3	0.0	38.2	0.0	7.8	0.0	0.0	4.2	0.0
LOS by Move:	A	A	A	D	A	D	A	A	A	A	A	A
HCM2kAvgQ:	0	0	0	11	0	8	0	25	0	0	10	0

Note: Queue reported is the number of cars per lane.

City of Murrieta General Plan
Future Proposed General Plan
PM Peak Hour

Level Of Service Computation Report
2000 HCM Operations Method (Future Volume Alternative)

Intersection #33 I-215 NB Off-Ramp & Murrieta Hot Springs Road

Cycle (sec): 100 Critical Vol./Cap.(X): 0.619
Loss Time (sec): 0 (Y+R=4.0 sec) Average Delay (sec/veh): 9.4
Optimal Cycle: 49 Level Of Service: A

Street Name:	I-215 NB Off-Ramp						Murrieta Hot Springs Road					
Approach:	North Bound			South Bound			East Bound			West Bound		
Movement:	L	T	R	L	T	R	L	T	R	L	T	R
Control:	Protected			Protected			Permitted			Permitted		
Rights:	Include			Include			Ignore			Ignore		
Min. Green:	0	0	0	0	0	0	0	0	0	0	0	0
Lanes:	2	0 0	0 2	0	0 0	0 0	0	0 3	0 1	0	0 3	0 1
Volume Module:												
Base Vol:	84	0	465	0	0	0	0	2331	104	0	2361	1383
Growth Adj:	1.00	1.00	1.00	1.00	1.00	1.00	1.00	1.00	1.00	1.00	1.00	1.00
Initial Bse:	84	0	465	0	0	0	0	2331	104	0	2361	1383
Added Vol:	0	0	0	0	0	0	0	0	0	0	0	0
PasserByVol:	0	0	0	0	0	0	0	0	0	0	0	0
Initial Fut:	84	0	465	0	0	0	0	2331	104	0	2361	1383
User Adj:	1.00	1.00	1.00	1.00	1.00	1.00	1.00	1.00	0.00	1.00	1.00	0.00
PHF Adj:	1.00	1.00	1.00	1.00	1.00	1.00	1.00	1.00	0.00	1.00	1.00	0.00
PHF Volume:	84	0	465	0	0	0	0	2331	0	0	2361	0
Reduct Vol:	0	0	0	0	0	0	0	0	0	0	0	0
Reduced Vol:	84	0	465	0	0	0	0	2331	0	0	2361	0
PCE Adj:	1.00	1.00	1.00	1.00	1.00	1.00	1.00	1.00	0.00	1.00	1.00	0.00
MLF Adj:	1.00	1.00	1.00	1.00	1.00	1.00	1.00	1.00	0.00	1.00	1.00	0.00
FinalVolume:	84	0	465	0	0	0	0	2331	0	0	2361	0
Saturation Flow Module:												
Sat/Lane:	1900	1900	1900	1900	1900	1900	1900	1900	1900	1900	1900	1900
Adjustment:	0.92	1.00	0.75	1.00	1.00	1.00	1.00	0.91	1.00	1.00	0.91	1.00
Lanes:	2.00	0.00	2.00	0.00	0.00	0.00	0.00	3.00	1.00	0.00	3.00	1.00
Final Sat.:	3502	0	2842	0	0	0	0	5187	1900	0	5187	1900
Capacity Analysis Module:												
Vol/Sat:	0.02	0.00	0.16	0.00	0.00	0.00	0.00	0.45	0.00	0.00	0.46	0.00
Crit Moves:			****								****	
Green/Cycle:	0.26	0.00	0.26	0.00	0.00	0.00	0.00	0.74	0.00	0.00	0.74	0.00
Volume/Cap:	0.09	0.00	0.62	0.00	0.00	0.00	0.00	0.61	0.00	0.00	0.62	0.00
Delay/Veh:	27.8	0.0	33.9	0.0	0.0	0.0	0.0	6.6	0.0	0.0	6.7	0.0
User DelAdj:	1.00	1.00	1.00	1.00	1.00	1.00	1.00	1.00	1.00	1.00	1.00	1.00
AdjDel/Veh:	27.8	0.0	33.9	0.0	0.0	0.0	0.0	6.6	0.0	0.0	6.7	0.0
LOS by Move:	C	A	C	A	A	A	A	A	A	A	A	A
HCM2kAvgQ:	1	0	8	0	0	0	0	13	0	0	13	0

Note: Queue reported is the number of cars per lane.

City of Murrieta General Plan
Future Proposed General Plan
PM Peak Hour

Level Of Service Computation Report
2000 HCM Operations Method (Future Volume Alternative)

Intersection #34 Jackson Avenue & Murrieta Hot Springs Road

Cycle (sec): 100 Critical Vol./Cap.(X): 0.552
Loss Time (sec): 0 (Y+R=4.0 sec) Average Delay (sec/veh): 8.5
Optimal Cycle: 51 Level Of Service: A

Street Name:	Jackson Avenue						Murrieta Hot Springs Road					
Approach:	North Bound			South Bound			East Bound			West Bound		
Movement:	L	T	R	L	T	R	L	T	R	L	T	R
Control:	Protected			Protected			Protected			Protected		
Rights:	Include			Include			Include			Include		
Min. Green:	0	0	0	0	0	0	0	0	0	0	0	0
Lanes:	2	0 0	0 2	0	0 0	0 0	0	0 3	0 1	1	0 3	0 0
Volume Module:												
Base Vol:	201	0	169	0	0	0	0	1910	59	213	2568	0
Growth Adj:	1.00	1.00	1.00	1.00	1.00	1.00	1.00	1.00	1.00	1.00	1.00	1.00
Initial Bse:	201	0	169	0	0	0	0	1910	59	213	2568	0
Added Vol:	0	0	0	0	0	0	0	0	0	0	0	0
PasserByVol:	0	0	0	0	0	0	0	0	0	0	0	0
Initial Fut:	201	0	169	0	0	0	0	1910	59	213	2568	0
User Adj:	1.00	1.00	1.00	1.00	1.00	1.00	1.00	1.00	1.00	1.00	1.00	1.00
PHF Adj:	1.00	1.00	1.00	1.00	1.00	1.00	1.00	1.00	1.00	1.00	1.00	1.00
PHF Volume:	201	0	169	0	0	0	0	1910	59	213	2568	0
Reduct Vol:	0	0	0	0	0	0	0	0	0	0	0	0
Reduced Vol:	201	0	169	0	0	0	0	1910	59	213	2568	0
PCE Adj:	1.00	1.00	1.00	1.00	1.00	1.00	1.00	1.00	1.00	1.00	1.00	1.00
MLF Adj:	1.00	1.00	1.00	1.00	1.00	1.00	1.00	1.00	1.00	1.00	1.00	1.00
FinalVolume:	201	0	169	0	0	0	0	1910	59	213	2568	0
Saturation Flow Module:												
Sat/Lane:	1900	1900	1900	1900	1900	1900	1900	1900	1900	1900	1900	1900
Adjustment:	0.92	1.00	0.75	1.00	1.00	1.00	1.00	0.91	0.85	0.95	0.91	1.00
Lanes:	2.00	0.00	2.00	0.00	0.00	0.00	0.00	3.00	1.00	1.00	3.00	0.00
Final Sat.:	3502	0	2842	0	0	0	0	5187	1615	1805	5187	0
Capacity Analysis Module:												
Vol/Sat:	0.06	0.00	0.06	0.00	0.00	0.00	0.00	0.37	0.04	0.12	0.50	0.00
Crit Moves:	****						****				****	
Green/Cycle:	0.10	0.00	0.10	0.00	0.00	0.00	0.00	0.68	0.68	0.22	0.90	0.00
Volume/Cap:	0.55	0.00	0.57	0.00	0.00	0.00	0.00	0.54	0.05	0.54	0.55	0.00
Delay/Veh:	44.4	0.0	45.4	0.0	0.0	0.0	0.0	8.3	5.4	36.3	1.2	0.0
User DelAdj:	1.00	1.00	1.00	1.00	1.00	1.00	1.00	1.00	1.00	1.00	1.00	1.00
AdjDel/Veh:	44.4	0.0	45.4	0.0	0.0	0.0	0.0	8.3	5.4	36.3	1.2	0.0
LOS by Move:	D	A	D	A	A	A	A	A	A	D	A	A
HCM2kAvgQ:	4	0	4	0	0	0	0	11	1	6	7	0

Note: Queue reported is the number of cars per lane.

City of Murrieta General Plan
Future Proposed General Plan
PM Peak Hour

Level Of Service Computation Report
2000 HCM Operations Method (Future Volume Alternative)

Intersection #35 Margarita Road & Murrieta Hot Springs Road

Cycle (sec): 100 Critical Vol./Cap.(X): 1.018
Loss Time (sec): 0 (Y+R=4.0 sec) Average Delay (sec/veh): 49.2
Optimal Cycle: 180 Level Of Service: D

Street Name:	Margarita Road						Murrieta Hot Springs Road					
Approach:	North Bound			South Bound			East Bound			West Bound		
Movement:	L -	T -	R	L -	T -	R	L -	T -	R	L -	T -	R
Control:	Split Phase			Split Phase			Protected			Protected		
Rights:	Include			Include			Include			Include		
Min. Green:	0	0	0	0	0	0	0	0	0	0	0	0
Lanes:	2 0	1 0	1	0 1	0 0	1	1 0	2 1	0	1 0	2 1	0
Volume Module:												
Base Vol:	933	69	383	185	77	150	51	1752	538	273	1609	38
Growth Adj:	1.00	1.00	1.00	1.00	1.00	1.00	1.00	1.00	1.00	1.00	1.00	1.00
Initial Bse:	933	69	383	185	77	150	51	1752	538	273	1609	38
Added Vol:	0	0	0	0	0	0	0	0	0	0	0	0
PasserByVol:	0	0	0	0	0	0	0	0	0	0	0	0
Initial Fut:	933	69	383	185	77	150	51	1752	538	273	1609	38
User Adj:	1.00	1.00	1.00	1.00	1.00	1.00	1.00	1.00	1.00	1.00	1.00	1.00
PHF Adj:	1.00	1.00	1.00	1.00	1.00	1.00	1.00	1.00	1.00	1.00	1.00	1.00
PHF Volume:	933	69	383	185	77	150	51	1752	538	273	1609	38
Reduct Vol:	0	0	0	0	0	0	0	0	0	0	0	0
Reduced Vol:	933	69	383	185	77	150	51	1752	538	273	1609	38
PCE Adj:	1.00	1.00	1.00	1.00	1.00	1.00	1.00	1.00	1.00	1.00	1.00	1.00
MLF Adj:	1.00	1.00	1.00	1.00	1.00	1.00	1.00	1.00	1.00	1.00	1.00	1.00
FinalVolume:	933	69	383	185	77	150	51	1752	538	273	1609	38
Saturation Flow Module:												
Sat/Lane:	1900	1900	1900	1900	1900	1900	1900	1900	1900	1900	1900	1900
Adjustment:	0.92	1.00	0.85	0.97	0.97	0.85	0.95	0.88	0.88	0.95	0.91	0.91
Lanes:	2.00	1.00	1.00	0.71	0.29	1.00	1.00	2.30	0.70	1.00	2.93	0.07
Final Sat.:	3502	1900	1615	1296	539	1615	1805	3830	1176	1805	5052	119
Capacity Analysis Module:												
Vol/Sat:	0.27	0.04	0.24	0.14	0.14	0.09	0.03	0.46	0.46	0.15	0.32	0.32
Crit Moves:	****				****			****		****		
Green/Cycle:	0.26	0.26	0.26	0.14	0.14	0.14	0.05	0.45	0.45	0.15	0.55	0.55
Volume/Cap:	1.02	0.14	0.91	1.02	1.02	0.66	0.58	1.02	1.02	1.02	0.58	0.58
Delay/Veh:	71.2	28.4	58.4	103.8	104	47.9	55.9	51.1	51.1	102.2	15.2	15.2
User DelAdj:	1.00	1.00	1.00	1.00	1.00	1.00	1.00	1.00	1.00	1.00	1.00	1.00
AdjDel/Veh:	71.2	28.4	58.4	103.8	104	47.9	55.9	51.1	51.1	102.2	15.2	15.2
LOS by Move:	E	C	E	F	F	D	E	D	D	F	B	B
HCM2kAvgQ:	22	2	15	13	13	6	2	35	35	14	12	12

Note: Queue reported is the number of cars per lane.

City of Murrieta General Plan
Future Proposed General Plan
PM Peak Hour

Level Of Service Computation Report
2000 HCM Operations Method (Future Volume Alternative)

Intersection #36 French Valley Parkway & Murrieta Hot Springs Road

Cycle (sec): 100 Critical Vol./Cap.(X): 0.815
Loss Time (sec): 0 (Y+R=4.0 sec) Average Delay (sec/veh): 18.4
Optimal Cycle: 124 Level Of Service: B

Street Name:	French Valley Parkway						Murrieta Hot Springs Road					
Approach:	North Bound			South Bound			East Bound			West Bound		
Movement:	L -	T -	R	L -	T -	R	L -	T -	R	L -	T -	R
Control:	Protected			Protected			Protected			Protected		
Rights:	Ovl			Include			Include			Include		
Min. Green:	0	0	0	0	0	0	0	0	0	0	0	0
Lanes:	1 0	0 0	2	0 0	0 0	0	0 0	2 1	0	1 0	3 0	0
Volume Module:												
Base Vol:	32	0	1110	0	0	0	0	1808	343	453	1697	0
Growth Adj:	1.00	1.00	1.00	1.00	1.00	1.00	1.00	1.00	1.00	1.00	1.00	1.00
Initial Bse:	32	0	1110	0	0	0	0	1808	343	453	1697	0
Added Vol:	0	0	0	0	0	0	0	0	0	0	0	0
PasserByVol:	0	0	0	0	0	0	0	0	0	0	0	0
Initial Fut:	32	0	1110	0	0	0	0	1808	343	453	1697	0
User Adj:	1.00	1.00	1.00	1.00	1.00	1.00	1.00	1.00	1.00	1.00	1.00	1.00
PHF Adj:	1.00	1.00	1.00	1.00	1.00	1.00	1.00	1.00	1.00	1.00	1.00	1.00
PHF Volume:	32	0	1110	0	0	0	0	1808	343	453	1697	0
Reduct Vol:	0	0	0	0	0	0	0	0	0	0	0	0
Reduced Vol:	32	0	1110	0	0	0	0	1808	343	453	1697	0
PCE Adj:	1.00	1.00	1.00	1.00	1.00	1.00	1.00	1.00	1.00	1.00	1.00	1.00
MLF Adj:	1.00	1.00	1.00	1.00	1.00	1.00	1.00	1.00	1.00	1.00	1.00	1.00
FinalVolume:	32	0	1110	0	0	0	0	1808	343	453	1697	0
Saturation Flow Module:												
Sat/Lane:	1900	1900	1900	1900	1900	1900	1900	1900	1900	1900	1900	1900
Adjustment:	0.95	1.00	0.75	1.00	1.00	1.00	1.00	0.89	0.89	0.95	0.91	1.00
Lanes:	1.00	0.00	2.00	0.00	0.00	0.00	0.00	2.52	0.48	1.00	3.00	0.00
Final Sat.:	1805	0	2842	0	0	0	0	4255	807	1805	5187	0
Capacity Analysis Module:												
Vol/Sat:	0.02	0.00	0.39	0.00	0.00	0.00	0.00	0.42	0.42	0.25	0.33	0.00
Crit Moves:			****					****		****		
Green/Cycle:	0.17	0.00	0.48	0.00	0.00	0.00	0.00	0.52	0.52	0.31	0.83	0.00
Volume/Cap:	0.10	0.00	0.82	0.00	0.00	0.00	0.00	0.82	0.82	0.82	0.39	0.00
Delay/Veh:	35.1	0.0	26.2	0.0	0.0	0.0	0.0	22.0	22.0	41.1	2.2	0.0
User DelAdj:	1.00	1.00	1.00	1.00	1.00	1.00	1.00	1.00	1.00	1.00	1.00	1.00
AdjDel/Veh:	35.1	0.0	26.2	0.0	0.0	0.0	0.0	22.0	22.0	41.1	2.2	0.0
LOS by Move:	D	A	C	A	A	A	A	C	C	D	A	A
HCM2kAvgQ:	1	0	19	0	0	0	0	22	22	15	5	0

Note: Queue reported is the number of cars per lane.

City of Murrieta General Plan
Future Proposed General Plan
PM Peak Hour

Level Of Service Computation Report
2000 HCM Operations Method (Future Volume Alternative)

Intersection #37 Jefferson Avenue & Guava Street

Cycle (sec): 100 Critical Vol./Cap.(X): 0.767
Loss Time (sec): 0 (Y+R=4.0 sec) Average Delay (sec/veh): 7.9
Optimal Cycle: 80 Level Of Service: A

Street Name:	Jefferson Avenue						Guava Street					
Approach:	North Bound			South Bound			East Bound			West Bound		
Movement:	L	T	R	L	T	R	L	T	R	L	T	R
Control:	Protected			Protected			Permitted			Permitted		
Rights:	Include			Include			Include			Include		
Min. Green:	0	0	0	0	0	0	0	0	0	0	0	0
Lanes:	1 0	2 1	0	1 0	2 1	0	1 0	0 1	0	1 0	1 1	0
Volume Module:												
Base Vol:	14	3281	10	11	1174	349	103	86	133	2	71	16
Growth Adj:	1.00	1.00	1.00	1.00	1.00	1.00	1.00	1.00	1.00	1.00	1.00	1.00
Initial Bse:	14	3281	10	11	1174	349	103	86	133	2	71	16
Added Vol:	0	0	0	0	0	0	0	0	0	0	0	0
PasserByVol:	0	0	0	0	0	0	0	0	0	0	0	0
Initial Fut:	14	3281	10	11	1174	349	103	86	133	2	71	16
User Adj:	1.00	1.00	1.00	1.00	1.00	1.00	1.00	1.00	1.00	1.00	1.00	1.00
PHF Adj:	1.00	1.00	1.00	1.00	1.00	1.00	1.00	1.00	1.00	1.00	1.00	1.00
PHF Volume:	14	3281	10	11	1174	349	103	86	133	2	71	16
Reduct Vol:	0	0	0	0	0	0	0	0	0	0	0	0
Reduced Vol:	14	3281	10	11	1174	349	103	86	133	2	71	16
PCE Adj:	1.00	1.00	1.00	1.00	1.00	1.00	1.00	1.00	1.00	1.00	1.00	1.00
MLF Adj:	1.00	1.00	1.00	1.00	1.00	1.00	1.00	1.00	1.00	1.00	1.00	1.00
FinalVolume:	14	3281	10	11	1174	349	103	86	133	2	71	16
Saturation Flow Module:												
Sat/Lane:	1900	1900	1900	1900	1900	1900	1900	1900	1900	1900	1900	1900
Adjustment:	0.95	0.91	0.91	0.95	0.88	0.88	0.61	0.91	0.91	0.24	0.92	0.92
Lanes:	1.00	2.99	0.01	1.00	2.31	0.69	1.00	0.39	0.61	1.00	1.63	0.37
Final Sat.:	1805	5171	16	1805	3862	1148	1161	678	1049	460	2864	645
Capacity Analysis Module:												
Vol/Sat:	0.01	0.63	0.63	0.01	0.30	0.30	0.09	0.13	0.13	0.00	0.02	0.02
Crit Moves:		****		****				****				
Green/Cycle:	0.02	0.83	0.83	0.01	0.81	0.81	0.17	0.17	0.17	0.17	0.17	0.17
Volume/Cap:	0.37	0.77	0.77	0.77	0.37	0.37	0.54	0.77	0.77	0.03	0.15	0.15
Delay/Veh:	54.5	5.0	5.0	171.1	2.5	2.5	41.2	51.8	51.8	35.1	35.8	35.8
User DelAdj:	1.00	1.00	1.00	1.00	1.00	1.00	1.00	1.00	1.00	1.00	1.00	1.00
AdjDel/Veh:	54.5	5.0	5.0	171.1	2.5	2.5	41.2	51.8	51.8	35.1	35.8	35.8
LOS by Move:	D	A	A	F	A	A	D	D	D	D	D	D
HCM2kAvgQ:	1	19	19	1	5	5	4	8	8	0	1	1

Note: Queue reported is the number of cars per lane.

City of Murrieta General Plan
Future Proposed General Plan
PM Peak Hour

Level Of Service Computation Report
2000 HCM Operations Method (Future Volume Alternative)

Intersection #39 Washington Ave & Calle Del Oso Oro/Nutmeg

Cycle (sec): 100 Critical Vol./Cap.(X): 0.549
Loss Time (sec): 0 (Y+R=4.0 sec) Average Delay (sec/veh): 27.5
Optimal Cycle: 51 Level Of Service: C

Street Name:	Washington Ave						Calle Del Oso Oro/Nutmeg					
Approach:	North Bound			South Bound			East Bound			West Bound		
Movement:	L	T	R	L	T	R	L	T	R	L	T	R
Control:	Protected			Protected			Protected			Protected		
Rights:	Include			Include			Include			Include		
Min. Green:	0	0	0	0	0	0	0	0	0	0	0	0
Lanes:	1 0	2 1	0	1 0	2 1	0	1 0	1 1	0	1 0	1 1	0
Volume Module:												
Base Vol:	421	306	134	93	236	55	28	209	276	164	635	163
Growth Adj:	1.00	1.00	1.00	1.00	1.00	1.00	1.00	1.00	1.00	1.00	1.00	1.00
Initial Bse:	421	306	134	93	236	55	28	209	276	164	635	163
Added Vol:	0	0	0	0	0	0	0	0	0	0	0	0
PasserByVol:	0	0	0	0	0	0	0	0	0	0	0	0
Initial Fut:	421	306	134	93	236	55	28	209	276	164	635	163
User Adj:	1.00	1.00	1.00	1.00	1.00	1.00	1.00	1.00	1.00	1.00	1.00	1.00
PHF Adj:	1.00	1.00	1.00	1.00	1.00	1.00	1.00	1.00	1.00	1.00	1.00	1.00
PHF Volume:	421	306	134	93	236	55	28	209	276	164	635	163
Reduct Vol:	0	0	0	0	0	0	0	0	0	0	0	0
Reduced Vol:	421	306	134	93	236	55	28	209	276	164	635	163
PCE Adj:	1.00	1.00	1.00	1.00	1.00	1.00	1.00	1.00	1.00	1.00	1.00	1.00
MLF Adj:	1.00	1.00	1.00	1.00	1.00	1.00	1.00	1.00	1.00	1.00	1.00	1.00
FinalVolume:	421	306	134	93	236	55	28	209	276	164	635	163
Saturation Flow Module:												
Sat/Lane:	1900	1900	1900	1900	1900	1900	1900	1900	1900	1900	1900	1900
Adjustment:	0.95	0.87	0.87	0.95	0.88	0.88	0.95	0.87	0.87	0.95	0.92	0.92
Lanes:	1.00	2.09	0.91	1.00	2.43	0.57	1.00	1.00	1.00	1.00	1.59	0.41
Final Sat.:	1805	3441	1507	1805	4089	953	1805	1652	1652	1805	2784	715
Capacity Analysis Module:												
Vol/Sat:	0.23	0.09	0.09	0.05	0.06	0.06	0.02	0.13	0.17	0.09	0.23	0.23
Crit Moves:	****				****				****	****		
Green/Cycle:	0.42	0.34	0.34	0.19	0.11	0.11	0.03	0.30	0.30	0.17	0.44	0.44
Volume/Cap:	0.55	0.26	0.26	0.26	0.55	0.55	0.52	0.42	0.55	0.55	0.52	0.52
Delay/Veh:	22.4	24.3	24.3	34.6	43.7	43.7	56.4	27.9	29.8	40.5	20.6	20.6
User DelAdj:	1.00	1.00	1.00	1.00	1.00	1.00	1.00	1.00	1.00	1.00	1.00	1.00
AdjDel/Veh:	22.4	24.3	24.3	34.6	43.7	43.7	56.4	27.9	29.8	40.5	20.6	20.6
LOS by Move:	C	C	C	C	D	D	E	C	C	D	C	C
HCM2kAvgQ:	10	4	4	3	4	4	2	6	8	5	10	10

Note: Queue reported is the number of cars per lane.

City of Murrieta General Plan
Future Proposed General Plan
PM Peak Hour

Level Of Service Computation Report
2000 HCM Operations Method (Future Volume Alternative)

Intersection #40 Clinton Keith Rd & Calle de Oso Oro/Bear Creek Dr

Cycle (sec): 100 Critical Vol./Cap.(X): 0.651
Loss Time (sec): 0 (Y+R=4.0 sec) Average Delay (sec/veh): 16.5
Optimal Cycle: 53 Level Of Service: B

Street Name:	Clinton Keith Rd						Calle de Oso Oro/Bear Creek Dr					
Approach:	North Bound			South Bound			East Bound			West Bound		
Movement:	L	T	R	L	T	R	L	T	R	L	T	R
Control:	Protected			Protected			Permitted			Permitted		
Rights:	Include			Include			Include			Include		
Min. Green:	0	0	0	0	0	0	0	0	0	0	0	0
Lanes:	1	0	1	1	0	1	0	1	1	0	1	0	0	1	0	1	1	0
Volume Module:												
Base Vol:	80	179	208	16	90	271	187	520	142	226	747	9
Growth Adj:	1.00	1.00	1.00	1.00	1.00	1.00	1.00	1.00	1.00	1.00	1.00	1.00
Initial Bse:	80	179	208	16	90	271	187	520	142	226	747	9
Added Vol:	0	0	0	0	0	0	0	0	0	0	0	0
PasserByVol:	0	0	0	0	0	0	0	0	0	0	0	0
Initial Fut:	80	179	208	16	90	271	187	520	142	226	747	9
User Adj:	1.00	1.00	1.00	1.00	1.00	1.00	1.00	1.00	1.00	1.00	1.00	1.00
PHF Adj:	1.00	1.00	1.00	1.00	1.00	1.00	1.00	1.00	1.00	1.00	1.00	1.00
PHF Volume:	80	179	208	16	90	271	187	520	142	226	747	9
Reduct Vol:	0	0	0	0	0	0	0	0	0	0	0	0
Reduced Vol:	80	179	208	16	90	271	187	520	142	226	747	9
PCE Adj:	1.00	1.00	1.00	1.00	1.00	1.00	1.00	1.00	1.00	1.00	1.00	1.00
MLF Adj:	1.00	1.00	1.00	1.00	1.00	1.00	1.00	1.00	1.00	1.00	1.00	1.00
FinalVolume:	80	179	208	16	90	271	187	520	142	226	747	9
Saturation Flow Module:												
Sat/Lane:	1900	1900	1900	1900	1900	1900	1900	1900	1900	1900	1900	1900
Adjustment:	0.95	0.87	0.87	0.95	0.84	0.84	0.32	0.97	0.97	0.27	0.95	0.95
Lanes:	1.00	1.00	1.00	1.00	1.00	1.00	1.00	0.79	0.21	1.00	1.98	0.02
Final Sat.:	1805	1659	1659	1805	1601	1601	614	1445	395	517	3560	43
Capacity Analysis Module:												
Vol/Sat:	0.04	0.11	0.13	0.01	0.06	0.17	0.30	0.36	0.36	0.44	0.21	0.21
Crit Moves:	****					****				****		
Green/Cycle:	0.07	0.31	0.31	0.02	0.26	0.26	0.67	0.67	0.67	0.67	0.67	0.67
Volume/Cap:	0.65	0.35	0.41	0.41	0.22	0.65	0.45	0.54	0.54	0.65	0.31	0.31
Delay/Veh:	57.2	27.2	27.8	55.1	29.1	35.7	8.5	8.9	8.9	13.9	6.9	6.9
User DelAdj:	1.00	1.00	1.00	1.00	1.00	1.00	1.00	1.00	1.00	1.00	1.00	1.00
AdjDel/Veh:	57.2	27.2	27.8	55.1	29.1	35.7	8.5	8.9	8.9	13.9	6.9	6.9
LOS by Move:	E	C	C	E	C	D	A	A	A	B	A	A
HCM2kAvgQ:	4	5	6	1	2	9	3	11	11	5	5	5

Note: Queue reported is the number of cars per lane.

City of Murrieta General Plan
Future Proposed General Plan
PM Peak Hour

Level Of Service Computation Report
2000 HCM Operations Method (Future Volume Alternative)

Intersection #43 Jefferson Ave & Lemon St

Cycle (sec): 100 Critical Vol./Cap.(X): 0.726
Loss Time (sec): 0 (Y+R=4.0 sec) Average Delay (sec/veh): 18.3
Optimal Cycle: 83 Level Of Service: B

Street Name:	Jefferson Ave						Lemon St					
Approach:	North Bound			South Bound			East Bound			West Bound		
Movement:	L	T	R	L	T	R	L	T	R	L	T	R
Control:	Protected			Protected			Protected			Protected		
Rights:	Include			Include			Include			Include		
Min. Green:	0	0	0	0	0	0	0	0	0	0	0	0
Lanes:	1	0	2	1	0	1	0	2	1	0	1	0	1	0	1	0	0	1	0
Volume Module:												
Base Vol:	418	2124	2	5	1607	38	42	39	270	16	21	13
Growth Adj:	1.00	1.00	1.00	1.00	1.00	1.00	1.00	1.00	1.00	1.00	1.00	1.00
Initial Bse:	418	2124	2	5	1607	38	42	39	270	16	21	13
Added Vol:	0	0	0	0	0	0	0	0	0	0	0	0
PasserByVol:	0	0	0	0	0	0	0	0	0	0	0	0
Initial Fut:	418	2124	2	5	1607	38	42	39	270	16	21	13
User Adj:	1.00	1.00	1.00	1.00	1.00	1.00	1.00	1.00	1.00	1.00	1.00	1.00
PHF Adj:	1.00	1.00	1.00	1.00	1.00	1.00	1.00	1.00	1.00	1.00	1.00	1.00
PHF Volume:	418	2124	2	5	1607	38	42	39	270	16	21	13
Reduct Vol:	0	0	0	0	0	0	0	0	0	0	0	0
Reduced Vol:	418	2124	2	5	1607	38	42	39	270	16	21	13
PCE Adj:	1.00	1.00	1.00	1.00	1.00	1.00	1.00	1.00	1.00	1.00	1.00	1.00
MLF Adj:	1.00	1.00	1.00	1.00	1.00	1.00	1.00	1.00	1.00	1.00	1.00	1.00
FinalVolume:	418	2124	2	5	1607	38	42	39	270	16	21	13
Saturation Flow Module:												
Sat/Lane:	1900	1900	1900	1900	1900	1900	1900	1900	1900	1900	1900	1900
Adjustment:	0.95	0.91	0.91	0.95	0.91	0.91	0.95	1.00	0.85	0.95	0.94	0.94
Lanes:	1.00	2.99	0.01	1.00	2.93	0.07	1.00	1.00	1.00	1.00	0.62	0.38
Final Sat.:	1805	5182	5	1805	5052	119	1805	1900	1615	1805	1107	685
Capacity Analysis Module:												
Vol/Sat:	0.23	0.41	0.41	0.00	0.32	0.32	0.02	0.02	0.17	0.01	0.02	0.02
Crit Moves:	****				****				****	****		
Green/Cycle:	0.32	0.75	0.75	0.01	0.44	0.44	0.13	0.23	0.23	0.01	0.11	0.11
Volume/Cap:	0.73	0.54	0.54	0.54	0.73	0.73	0.17	0.09	0.73	0.73	0.17	0.17
Delay/Veh:	34.8	5.4	5.4	103.8	24.3	24.3	38.8	30.3	42.5	126.0	40.9	40.9
User DelAdj:	1.00	1.00	1.00	1.00	1.00	1.00	1.00	1.00	1.00	1.00	1.00	1.00
AdjDel/Veh:	34.8	5.4	5.4	103.8	24.3	24.3	38.8	30.3	42.5	126.0	40.9	40.9
LOS by Move:	C	A	A	F	C	C	D	C	D	F	D	D
HCM2kAvgQ:	13	10	10	1	16	16	1	1	9	2	1	1

Note: Queue reported is the number of cars per lane.

City of Murrieta General Plan
Future Proposed General Plan
PM Peak Hour

Level Of Service Computation Report
2000 HCM Operations Method (Future Volume Alternative)

Intersection #44 Jefferson Ave & Kalmia St

Cycle (sec): 100 | Critical Vol./Cap.(X): 1.680
Loss Time (sec): 0 (Y+R=4.0 sec) | Average Delay (sec/veh): 159.9
Optimal Cycle: 180 | Level Of Service: F

Street Name:	Jefferson Ave						Kalmia St					
Approach:	North Bound			South Bound			East Bound			West Bound		
Movement:	L	T	R	L	T	R	L	T	R	L	T	R
Control:	Protected			Protected			Protected			Protected		
Rights:	Include			Include			Include			Include		
Min. Green:	0	0	0	0	0	0	0	0	0	0	0	0
Lanes:	2 0	3 0	1	1 0	2 1	0	1 0	2 1	0	1 0	1 1	0
Volume Module:												
Base Vol:	412	1763	951	978	1203	34	34	658	281	313	533	869
Growth Adj:	1.00	1.00	1.00	1.00	1.00	1.00	1.00	1.00	1.00	1.00	1.00	1.00
Initial Bse:	412	1763	951	978	1203	34	34	658	281	313	533	869
Added Vol:	0	0	0	0	0	0	0	0	0	0	0	0
PasserByVol:	0	0	0	0	0	0	0	0	0	0	0	0
Initial Fut:	412	1763	951	978	1203	34	34	658	281	313	533	869
User Adj:	1.00	1.00	1.00	1.00	1.00	1.00	1.00	1.00	1.00	1.00	1.00	1.00
PHF Adj:	1.00	1.00	1.00	1.00	1.00	1.00	1.00	1.00	1.00	1.00	1.00	1.00
PHF Volume:	412	1763	951	978	1203	34	34	658	281	313	533	869
Reduct Vol:	0	0	0	0	0	0	0	0	0	0	0	0
Reduced Vol:	412	1763	951	978	1203	34	34	658	281	313	533	869
PCE Adj:	1.00	1.00	1.00	1.00	1.00	1.00	1.00	1.00	1.00	1.00	1.00	1.00
MLF Adj:	1.00	1.00	1.00	1.00	1.00	1.00	1.00	1.00	1.00	1.00	1.00	1.00
FinalVolume:	412	1763	951	978	1203	34	34	658	281	313	533	869
Saturation Flow Module:												
Sat/Lane:	1900	1900	1900	1900	1900	1900	1900	1900	1900	1900	1900	1900
Adjustment:	0.92	0.91	0.85	0.95	0.91	0.91	0.95	0.87	0.87	0.95	0.86	0.86
Lanes:	2.00	3.00	1.00	1.00	2.92	0.08	1.00	2.10	0.90	1.00	1.00	1.00
Final Sat.:	3502	5187	1615	1805	5024	142	1805	3471	1482	1805	1637	1637
Capacity Analysis Module:												
Vol/Sat:	0.12	0.34	0.59	0.54	0.24	0.24	0.02	0.19	0.19	0.17	0.33	0.53
Crit Moves:			****	****			****					****
Green/Cycle:	0.22	0.35	0.35	0.32	0.45	0.45	0.01	0.17	0.17	0.16	0.32	0.32
Volume/Cap:	0.53	0.97	1.68	1.68	0.53	0.53	1.68	1.11	1.11	1.11	1.03	1.68
Delay/Veh:	35.0	46.6	346.3	347.5	20.0	20.0	503.7	107	107.0	128.5	66.8	345.6
User DelAdj:	1.00	1.00	1.00	1.00	1.00	1.00	1.00	1.00	1.00	1.00	1.00	1.00
AdjDel/Veh:	35.0	46.6	346.3	347.5	20.0	20.0	503.7	107	107.0	128.5	66.8	345.6
LOS by Move:	D	D	F	F	C	C	F	F	F	F	E	F
HCM2kAvgQ:	6	25	77	79	10	10	4	19	19	17	25	74

Note: Queue reported is the number of cars per lane.

City of Murrieta General Plan
Future Proposed General Plan
PM Peak Hour

Level Of Service Computation Report
2000 HCM Operations Method (Future Volume Alternative)

Intersection #45 Jefferson Ave & Juniper St

Cycle (sec): 100 | Critical Vol./Cap.(X): 0.827
Loss Time (sec): 0 (Y+R=4.0 sec) | Average Delay (sec/veh): 22.3
Optimal Cycle: 132 | Level Of Service: C

Street Name:	Jefferson Ave						Juniper St					
Approach:	North Bound			South Bound			East Bound			West Bound		
Movement:	L	T	R	L	T	R	L	T	R	L	T	R
Control:	Protected			Protected			Protected			Protected		
Rights:	Include			Include			Include			Include		
Min. Green:	0	0	0	0	0	0	0	0	0	0	0	0
Lanes:	1 0	2 1	0	1 0	2 1	0	1 0	1 1	0	1 0	1 1	0
Volume Module:												
Base Vol:	192	2787	67	48	1603	98	338	90	378	18	72	82
Growth Adj:	1.00	1.00	1.00	1.00	1.00	1.00	1.00	1.00	1.00	1.00	1.00	1.00
Initial Bse:	192	2787	67	48	1603	98	338	90	378	18	72	82
Added Vol:	0	0	0	0	0	0	0	0	0	0	0	0
PasserByVol:	0	0	0	0	0	0	0	0	0	0	0	0
Initial Fut:	192	2787	67	48	1603	98	338	90	378	18	72	82
User Adj:	1.00	1.00	1.00	1.00	1.00	1.00	1.00	1.00	1.00	1.00	1.00	1.00
PHF Adj:	1.00	1.00	1.00	1.00	1.00	1.00	1.00	1.00	1.00	1.00	1.00	1.00
PHF Volume:	192	2787	67	48	1603	98	338	90	378	18	72	82
Reduct Vol:	0	0	0	0	0	0	0	0	0	0	0	0
Reduced Vol:	192	2787	67	48	1603	98	338	90	378	18	72	82
PCE Adj:	1.00	1.00	1.00	1.00	1.00	1.00	1.00	1.00	1.00	1.00	1.00	1.00
MLF Adj:	1.00	1.00	1.00	1.00	1.00	1.00	1.00	1.00	1.00	1.00	1.00	1.00
FinalVolume:	192	2787	67	48	1603	98	338	90	378	18	72	82
Saturation Flow Module:												
Sat/Lane:	1900	1900	1900	1900	1900	1900	1900	1900	1900	1900	1900	1900
Adjustment:	0.95	0.91	0.91	0.95	0.90	0.90	0.95	0.84	0.84	0.95	0.87	0.87
Lanes:	1.00	2.93	0.07	1.00	2.83	0.17	1.00	1.00	1.00	1.00	1.00	1.00
Final Sat.:	1805	5050	121	1805	4844	296	1805	1587	1587	1805	1661	1661
Capacity Analysis Module:												
Vol/Sat:	0.11	0.55	0.55	0.03	0.33	0.33	0.19	0.06	0.24	0.01	0.04	0.05
Crit Moves:		****		****					****	****		
Green/Cycle:	0.17	0.67	0.67	0.03	0.53	0.53	0.24	0.29	0.29	0.01	0.06	0.06
Volume/Cap:	0.62	0.83	0.83	0.83	0.62	0.62	0.79	0.20	0.83	0.83	0.69	0.79
Delay/Veh:	42.5	14.1	14.1	108.4	17.0	17.0	45.2	26.9	43.0	164.4	54.9	65.2
User DelAdj:	1.00	1.00	1.00	1.00	1.00	1.00	1.00	1.00	1.00	1.00	1.00	1.00
AdjDel/Veh:	42.5	14.1	14.1	108.4	17.0	17.0	45.2	26.9	43.0	164.4	54.9	65.2
LOS by Move:	D	B	B	F	B	B	D	C	D	F	D	E
HCM2kAvgQ:	6	26	26	3	14	14	12	2	14	2	4	5

Note: Queue reported is the number of cars per lane.

City of Murrieta General Plan
Future Proposed General Plan
PM Peak Hour

Level Of Service Computation Report
2000 HCM Operations Method (Future Volume Alternative)

Intersection #46 Jefferson Ave & Ivy St/Los Alamos Rd

Cycle (sec): 100 Critical Vol./Cap.(X): 0.944
Loss Time (sec): 0 (Y+R=4.0 sec) Average Delay (sec/veh): 35.8
Optimal Cycle: 180 Level Of Service: D

Street Name:	Jefferson Ave						Ivy St/Los Alamos Rd					
Approach:	North Bound			South Bound			East Bound			West Bound		
Movement:	L -	T -	R	L -	T -	R	L -	T -	R	L -	T -	R
Control:	Protected			Protected			Protected			Protected		
Rights:	Include			Include			Include			Include		
Min. Green:	0	0	0	0	0	0	0	0	0	0	0	0
Lanes:	2	0 3	0 1	2	0 3	0 1	1	0 1	1 0	1	0 1	1 0
Volume Module:												
Base Vol:	312	2389	685	457	1448	113	90	224	187	259	274	494
Growth Adj:	1.00	1.00	1.00	1.00	1.00	1.00	1.00	1.00	1.00	1.00	1.00	1.00
Initial Bse:	312	2389	685	457	1448	113	90	224	187	259	274	494
Added Vol:	0	0	0	0	0	0	0	0	0	0	0	0
PasserByVol:	0	0	0	0	0	0	0	0	0	0	0	0
Initial Fut:	312	2389	685	457	1448	113	90	224	187	259	274	494
User Adj:	1.00	1.00	1.00	1.00	1.00	1.00	1.00	1.00	1.00	1.00	1.00	1.00
PHF Adj:	1.00	1.00	1.00	1.00	1.00	1.00	1.00	1.00	1.00	1.00	1.00	1.00
PHF Volume:	312	2389	685	457	1448	113	90	224	187	259	274	494
Reduct Vol:	0	0	0	0	0	0	0	0	0	0	0	0
Reduced Vol:	312	2389	685	457	1448	113	90	224	187	259	274	494
PCE Adj:	1.00	1.00	1.00	1.00	1.00	1.00	1.00	1.00	1.00	1.00	1.00	1.00
MLF Adj:	1.00	1.00	1.00	1.00	1.00	1.00	1.00	1.00	1.00	1.00	1.00	1.00
FinalVolume:	312	2389	685	457	1448	113	90	224	187	259	274	494
Saturation Flow Module:												
Sat/Lane:	1900	1900	1900	1900	1900	1900	1900	1900	1900	1900	1900	1900
Adjustment:	0.92	0.91	0.85	0.92	0.91	0.85	0.95	0.89	0.89	0.95	0.86	0.86
Lanes:	2.00	3.00	1.00	2.00	3.00	1.00	1.00	1.09	0.91	1.00	1.00	1.00
Final Sat.:	3502	5187	1615	3502	5187	1615	1805	1834	1531	1805	1632	1632
Capacity Analysis Module:												
Vol/Sat:	0.09	0.46	0.42	0.13	0.28	0.07	0.05	0.12	0.12	0.14	0.17	0.30
Crit Moves:		****		****			****					****
Green/Cycle:	0.15	0.49	0.49	0.14	0.47	0.47	0.05	0.17	0.17	0.20	0.32	0.32
Volume/Cap:	0.59	0.94	0.87	0.94	0.59	0.15	0.94	0.71	0.71	0.71	0.52	0.94
Delay/Veh:	41.2	32.5	33.0	70.0	19.5	14.9	120.9	43.2	43.2	43.6	28.1	52.3
User DelAdj:	1.00	1.00	1.00	1.00	1.00	1.00	1.00	1.00	1.00	1.00	1.00	1.00
AdjDel/Veh:	41.2	32.5	33.0	70.0	19.5	14.9	120.9	43.2	43.2	43.6	28.1	52.3
LOS by Move:	D	C	C	E	B	B	F	D	D	D	C	D
HCM2kAvgQ:	5	31	22	11	12	2	6	8	8	9	8	20

Note: Queue reported is the number of cars per lane.

City of Murrieta General Plan
Future Proposed General Plan
PM Peak Hour

Level Of Service Computation Report
2000 HCM Operations Method (Future Volume Alternative)

Intersection #48 Madison Ave/I-15 SB Ramps & Kalmia St

Cycle (sec): 100 Critical Vol./Cap.(X): 0.889
Loss Time (sec): 0 (Y+R=4.0 sec) Average Delay (sec/veh): 30.9
Optimal Cycle: 180 Level Of Service: C

Street Name:	Madison Ave/I-15 SB Ramps						Kalmia St					
Approach:	North Bound			South Bound			East Bound			West Bound		
Movement:	L -	T -	R	L -	T -	R	L -	T -	R	L -	T -	R
Control:	Protected			Protected			Protected			Protected		
Rights:	Include			Include			Include			Include		
Min. Green:	0	0	0	0	0	0	0	0	0	0	0	0
Lanes:	2	0 0	0 2	2	0 1	1 0	0	0 3	1 0	2	0 2	1 1
Volume Module:												
Base Vol:	392	0	898	306	27	379	0	2534	265	265	1505	614
Growth Adj:	1.00	1.00	1.00	1.00	1.00	1.00	1.00	1.00	1.00	1.00	1.00	1.00
Initial Bse:	392	0	898	306	27	379	0	2534	265	265	1505	614
Added Vol:	0	0	0	0	0	0	0	0	0	0	0	0
PasserByVol:	0	0	0	0	0	0	0	0	0	0	0	0
Initial Fut:	392	0	898	306	27	379	0	2534	265	265	1505	614
User Adj:	1.00	1.00	1.00	1.00	1.00	1.00	1.00	1.00	1.00	1.00	1.00	1.00
PHF Adj:	1.00	1.00	1.00	1.00	1.00	1.00	1.00	1.00	1.00	1.00	1.00	1.00
PHF Volume:	392	0	898	306	27	379	0	2534	265	265	1505	614
Reduct Vol:	0	0	0	0	0	0	0	0	0	0	0	0
Reduced Vol:	392	0	898	306	27	379	0	2534	265	265	1505	614
PCE Adj:	1.00	1.00	1.00	1.00	1.00	1.00	1.00	1.00	1.00	1.00	1.00	1.00
MLF Adj:	1.00	1.00	1.00	1.00	1.00	1.00	1.00	1.00	1.00	1.00	1.00	1.00
FinalVolume:	392	0	898	306	27	379	0	2534	265	265	1505	614
Saturation Flow Module:												
Sat/Lane:	1900	1900	1900	1900	1900	1900	1900	1900	1900	1900	1900	1900
Adjustment:	0.92	1.00	0.75	0.92	0.82	0.82	1.00	0.90	0.90	0.92	0.87	0.87
Lanes:	2.00	0.00	2.00	2.00	1.00	1.00	0.00	3.62	0.38	2.00	2.84	1.16
Final Sat.:	3502	0	2842	3502	1552	1552	0	6174	646	3502	4701	1918
Capacity Analysis Module:												
Vol/Sat:	0.11	0.00	0.32	0.09	0.02	0.24	0.00	0.41	0.41	0.08	0.32	0.32
Crit Moves:			****	****				****		****		
Green/Cycle:	0.14	0.00	0.36	0.10	0.31	0.31	0.00	0.46	0.46	0.09	0.55	0.55
Volume/Cap:	0.79	0.00	0.89	0.89	0.06	0.79	0.00	0.89	0.89	0.89	0.59	0.59
Delay/Veh:	49.4	0.0	40.2	68.1	24.2	39.2	0.0	28.1	28.1	71.5	15.4	15.4
User DelAdj:	1.00	1.00	1.00	1.00	1.00	1.00	1.00	1.00	1.00	1.00	1.00	1.00
AdjDel/Veh:	49.4	0.0	40.2	68.1	24.2	39.2	0.0	28.1	28.1	71.5	15.4	15.4
LOS by Move:	D	A	D	E	C	D	A	C	C	E	B	B
HCM2kAvgQ:	8	0	18	8	1	13	0	25	25	7	12	12

Note: Queue reported is the number of cars per lane.

City of Murrieta General Plan
Future Proposed General Plan
PM Peak Hour

Level Of Service Computation Report
2000 HCM Operations Method (Future Volume Alternative)

Intersection #50 Hancock Ave & Murrieta Hot Springs Rd

Cycle (sec): 100 | Critical Vol./Cap.(X): 0.797
Loss Time (sec): 0 (Y+R=4.0 sec) | Average Delay (sec/veh): 17.6
Optimal Cycle: 112 | Level Of Service: B

Street Name:	Hancock Ave						Murrieta Hot Springs Rd					
Approach:	North Bound			South Bound			East Bound			West Bound		
Movement:	L -	T -	R	L -	T -	R	L -	T -	R	L -	T -	R
Control:	Protected			Protected			Protected			Protected		
Rights:	Include			Ovl			Include			Include		
Min. Green:	0	0	0	0	0	0	0	0	0	0	0	0
Lanes:	0 0	0 0	0	2 0	0 0	2	2 0	4 0	0	0 0	3 1	0
Volume Module:												
Base Vol:	0	0	0	598	0	820	755	3291	0	0	2482	311
Growth Adj:	1.00	1.00	1.00	1.00	1.00	1.00	1.00	1.00	1.00	1.00	1.00	1.00
Initial Bse:	0	0	0	598	0	820	755	3291	0	0	2482	311
Added Vol:	0	0	0	0	0	0	0	0	0	0	0	0
PasserByVol:	0	0	0	0	0	0	0	0	0	0	0	0
Initial Fut:	0	0	0	598	0	820	755	3291	0	0	2482	311
User Adj:	1.00	1.00	1.00	1.00	1.00	1.00	1.00	1.00	1.00	1.00	1.00	1.00
PHF Adj:	1.00	1.00	1.00	1.00	1.00	1.00	1.00	1.00	1.00	1.00	1.00	1.00
PHF Volume:	0	0	0	598	0	820	755	3291	0	0	2482	311
Reduct Vol:	0	0	0	0	0	0	0	0	0	0	0	0
Reduced Vol:	0	0	0	598	0	820	755	3291	0	0	2482	311
PCE Adj:	1.00	1.00	1.00	1.00	1.00	1.00	1.00	1.00	1.00	1.00	1.00	1.00
MLF Adj:	1.00	1.00	1.00	1.00	1.00	1.00	1.00	1.00	1.00	1.00	1.00	1.00
FinalVolume:	0	0	0	598	0	820	755	3291	0	0	2482	311
Saturation Flow Module:												
Sat/Lane:	1900	1900	1900	1900	1900	1900	1900	1900	1900	1900	1900	1900
Adjustment:	1.00	1.00	1.00	0.92	1.00	0.75	0.92	0.91	1.00	1.00	0.89	0.89
Lanes:	0.00	0.00	0.00	2.00	0.00	2.00	2.00	4.00	0.00	0.00	3.55	0.45
Final Sat.:	0	0	0	3502	0	2842	3502	6916	0	0	6041	757
Capacity Analysis Module:												
Vol/Sat:	0.00	0.00	0.00	0.17	0.00	0.29	0.22	0.48	0.00	0.00	0.41	0.41
Crit Moves:				****			****				****	
Green/Cycle:	0.00	0.00	0.00	0.21	0.00	0.48	0.27	0.79	0.00	0.00	0.52	0.52
Volume/Cap:	0.00	0.00	0.00	0.80	0.00	0.60	0.80	0.61	0.00	0.00	0.80	0.80
Delay/Veh:	0.0	0.0	0.0	43.2	0.0	19.4	38.7	4.6	0.0	0.0	21.3	21.3
User DelAdj:	1.00	1.00	1.00	1.00	1.00	1.00	1.00	1.00	1.00	1.00	1.00	1.00
AdjDel/Veh:	0.0	0.0	0.0	43.2	0.0	19.4	38.7	4.6	0.0	0.0	21.3	21.3
LOS by Move:	A	A	A	D	A	B	D	A	A	A	C	C
HCM2kAvgQ:	0	0	0	11	0	11	13	12	0	0	21	21

Note: Queue reported is the number of cars per lane.

City of Murrieta General Plan
Future Proposed General Plan
PM Peak Hour

Level Of Service Computation Report
2000 HCM Operations Method (Future Volume Alternative)

Intersection #51 Alta Murrieta Dr & Murrieta Hot Springs Rd

Cycle (sec): 100 | Critical Vol./Cap.(X): 1.012
Loss Time (sec): 0 (Y+R=4.0 sec) | Average Delay (sec/veh): 51.9
Optimal Cycle: 180 | Level Of Service: D

Street Name:	Alta Murrieta Dr						Murrieta Hot Springs Rd					
Approach:	North Bound			South Bound			East Bound			West Bound		
Movement:	L -	T -	R	L -	T -	R	L -	T -	R	L -	T -	R
Control:	Protected			Protected			Protected			Protected		
Rights:	Include			Include			Include			Ovl		
Min. Green:	0	0	0	0	0	0	0	0	0	0	0	0
Lanes:	2 0	1 0	1	2 0	1 1	0	2 0	2 1	0	2 0	4 0	1
Volume Module:												
Base Vol:	587	221	53	195	128	493	698	1702	518	173	2320	153
Growth Adj:	1.00	1.00	1.00	1.00	1.00	1.00	1.00	1.00	1.00	1.00	1.00	1.00
Initial Bse:	587	221	53	195	128	493	698	1702	518	173	2320	153
Added Vol:	0	0	0	0	0	0	0	0	0	0	0	0
PasserByVol:	0	0	0	0	0	0	0	0	0	0	0	0
Initial Fut:	587	221	53	195	128	493	698	1702	518	173	2320	153
User Adj:	1.00	1.00	1.00	1.00	1.00	1.00	1.00	1.00	1.00	1.00	1.00	1.00
PHF Adj:	1.00	1.00	1.00	1.00	1.00	1.00	1.00	1.00	1.00	1.00	1.00	1.00
PHF Volume:	587	221	53	195	128	493	698	1702	518	173	2320	153
Reduct Vol:	0	0	0	0	0	0	0	0	0	0	0	0
Reduced Vol:	587	221	53	195	128	493	698	1702	518	173	2320	153
PCE Adj:	1.00	1.00	1.00	1.00	1.00	1.00	1.00	1.00	1.00	1.00	1.00	1.00
MLF Adj:	1.00	1.00	1.00	1.00	1.00	1.00	1.00	1.00	1.00	1.00	1.00	1.00
FinalVolume:	587	221	53	195	128	493	698	1702	518	173	2320	153
Saturation Flow Module:												
Sat/Lane:	1900	1900	1900	1900	1900	1900	1900	1900	1900	1900	1900	1900
Adjustment:	0.92	1.00	0.85	0.92	0.84	0.84	0.92	0.88	0.88	0.92	0.91	0.85
Lanes:	2.00	1.00	1.00	2.00	1.00	1.00	2.00	2.30	0.70	2.00	4.00	1.00
Final Sat.:	3502	1900	1615	3502	1590	1590	3502	3838	1168	3502	6916	1615
Capacity Analysis Module:												
Vol/Sat:	0.17	0.12	0.03	0.06	0.08	0.31	0.20	0.44	0.44	0.05	0.34	0.09
Crit Moves:	****					****	****				****	
Green/Cycle:	0.17	0.32	0.32	0.15	0.31	0.31	0.20	0.48	0.48	0.05	0.33	0.48
Volume/Cap:	1.01	0.36	0.10	0.36	0.26	1.01	1.01	0.93	0.93	0.93	1.01	0.20
Delay/Veh:	82.2	26.6	24.1	38.4	26.2	74.2	77.6	32.3	32.3	94.3	55.4	14.8
User DelAdj:	1.00	1.00	1.00	1.00	1.00	1.00	1.00	1.00	1.00	1.00	1.00	1.00
AdjDel/Veh:	82.2	26.6	24.1	38.4	26.2	74.2	77.6	32.3	32.3	94.3	55.4	14.8
LOS by Move:	F	C	C	D	C	E	E	C	C	F	E	B
HCM2kAvgQ:	15	5	1	3	3	23	17	28	28	5	27	3

Note: Queue reported is the number of cars per lane.

City of Murrieta General Plan
Future Proposed General Plan
PM Peak Hour

Level Of Service Computation Report
2000 HCM Operations Method (Future Volume Alternative)

Intersection #52 Winchester Road - SR-79 & Murrieta Hot Springs Rd

Cycle (sec): 100 Critical Vol./Cap.(X): 1.375
Loss Time (sec): 0 (Y+R=4.0 sec) Average Delay (sec/veh): 104.8
Optimal Cycle: 180 Level Of Service: F

Street Name:	Winchester Road - SR-79						Murrieta Hot Springs Rd					
Approach:	North Bound			South Bound			East Bound			West Bound		
Movement:	L	T	R	L	T	R	L	T	R	L	T	R
Control:	Protected			Protected			Protected			Protected		
Rights:	Ovl			Include			Include			Include		
Min. Green:	0	0	0	0	0	0	0	0	0	0	0	0
Lanes:	2 0	3 0	1	2 0	3 0	1	2 0	3 0	1	2 0	2 1	0
Volume Module:												
Base Vol:	334	1970	195	195	1162	1115	1478	1036	280	244	754	99
Growth Adj:	1.00	1.00	1.00	1.00	1.00	1.00	1.00	1.00	1.00	1.00	1.00	1.00
Initial Bse:	334	1970	195	195	1162	1115	1478	1036	280	244	754	99
Added Vol:	0	0	0	0	0	0	0	0	0	0	0	0
PasserByVol:	0	0	0	0	0	0	0	0	0	0	0	0
Initial Fut:	334	1970	195	195	1162	1115	1478	1036	280	244	754	99
User Adj:	1.00	1.00	1.00	1.00	1.00	1.00	1.00	1.00	1.00	1.00	1.00	1.00
PHF Adj:	1.00	1.00	1.00	1.00	1.00	1.00	1.00	1.00	1.00	1.00	1.00	1.00
PHF Volume:	334	1970	195	195	1162	1115	1478	1036	280	244	754	99
Reduct Vol:	0	0	0	0	0	0	0	0	0	0	0	0
Reduced Vol:	334	1970	195	195	1162	1115	1478	1036	280	244	754	99
PCE Adj:	1.00	1.00	1.00	1.00	1.00	1.00	1.00	1.00	1.00	1.00	1.00	1.00
MLF Adj:	1.00	1.00	1.00	1.00	1.00	1.00	1.00	1.00	1.00	1.00	1.00	1.00
FinalVolume:	334	1970	195	195	1162	1115	1478	1036	280	244	754	99
Saturation Flow Module:												
Sat/Lane:	1900	1900	1900	1900	1900	1900	1900	1900	1900	1900	1900	1900
Adjustment:	0.92	0.91	0.85	0.92	0.91	0.85	0.92	0.91	0.85	0.92	0.89	0.89
Lanes:	2.00	3.00	1.00	2.00	3.00	1.00	2.00	3.00	1.00	2.00	2.65	0.35
Final Sat.:	3502	5187	1615	3502	5187	1615	3502	5187	1615	3502	4507	592
Capacity Analysis Module:												
Vol/Sat:	0.10	0.38	0.12	0.06	0.22	0.69	0.42	0.20	0.17	0.07	0.17	0.17
Crit Moves:	****					****	****				****	
Green/Cycle:	0.07	0.50	0.61	0.07	0.50	0.50	0.31	0.32	0.32	0.11	0.12	0.12
Volume/Cap:	1.38	0.76	0.20	0.76	0.45	1.38	1.38	0.63	0.55	0.63	1.38	1.38
Delay/Veh:	239.2	21.7	8.8	58.1	16.1	201.5	209.4	29.9	29.4	45.8	223	222.8
User DelAdj:	1.00	1.00	1.00	1.00	1.00	1.00	1.00	1.00	1.00	1.00	1.00	1.00
AdjDel/Veh:	239.2	21.7	8.8	58.1	16.1	201.5	209.4	29.9	29.4	45.8	223	222.8
LOS by Move:	F	C	A	E	B	F	F	C	C	D	F	F
HCM2kAvgQ:	13	19	3	5	8	72	50	11	8	5	22	22

Note: Queue reported is the number of cars per lane.

City of Murrieta General Plan
Future Proposed General Plan
PM Peak Hour

Level Of Service Computation Report
2000 HCM Operations Method (Future Volume Alternative)

Intersection #53 Hancock Ave & Los Alamos Rd

Cycle (sec): 100 Critical Vol./Cap.(X): 1.581
Loss Time (sec): 0 (Y+R=4.0 sec) Average Delay (sec/veh): 223.1
Optimal Cycle: 180 Level Of Service: F

Street Name:	Hancock Ave						Los Alamos Rd					
Approach:	North Bound			South Bound			East Bound			West Bound		
Movement:	L	T	R	L	T	R	L	T	R	L	T	R
Control:	Protected			Protected			Protected			Protected		
Rights:	Include			Include			Include			Include		
Min. Green:	0	0	0	0	0	0	0	0	0	0	0	0
Lanes:	1 0	1 1	0	2 0	0 1	0	1 0	1 1	0	1 0	1 1	0
Volume Module:												
Base Vol:	124	438	871	657	115	26	105	1967	46	538	1361	703
Growth Adj:	1.00	1.00	1.00	1.00	1.00	1.00	1.00	1.00	1.00	1.00	1.00	1.00
Initial Bse:	124	438	871	657	115	26	105	1967	46	538	1361	703
Added Vol:	0	0	0	0	0	0	0	0	0	0	0	0
PasserByVol:	0	0	0	0	0	0	0	0	0	0	0	0
Initial Fut:	124	438	871	657	115	26	105	1967	46	538	1361	703
User Adj:	1.00	1.00	1.00	1.00	1.00	1.00	1.00	1.00	1.00	1.00	1.00	1.00
PHF Adj:	1.00	1.00	1.00	1.00	1.00	1.00	1.00	1.00	1.00	1.00	1.00	1.00
PHF Volume:	124	438	871	657	115	26	105	1967	46	538	1361	703
Reduct Vol:	0	0	0	0	0	0	0	0	0	0	0	0
Reduced Vol:	124	438	871	657	115	26	105	1967	46	538	1361	703
PCE Adj:	1.00	1.00	1.00	1.00	1.00	1.00	1.00	1.00	1.00	1.00	1.00	1.00
MLF Adj:	1.00	1.00	1.00	1.00	1.00	1.00	1.00	1.00	1.00	1.00	1.00	1.00
FinalVolume:	124	438	871	657	115	26	105	1967	46	538	1361	703
Saturation Flow Module:												
Sat/Lane:	1900	1900	1900	1900	1900	1900	1900	1900	1900	1900	1900	1900
Adjustment:	0.95	0.86	0.86	0.92	0.97	0.97	0.95	0.95	0.95	0.95	0.90	0.90
Lanes:	1.00	1.00	1.00	2.00	0.82	0.18	1.00	1.95	0.05	1.00	1.32	0.68
Final Sat.:	1805	1625	1625	3502	1506	341	1805	3517	82	1805	2259	1167
Capacity Analysis Module:												
Vol/Sat:	0.07	0.27	0.54	0.19	0.08	0.08	0.06	0.56	0.56	0.30	0.60	0.60
Crit Moves:			****	****				****		****		
Green/Cycle:	0.22	0.34	0.34	0.12	0.24	0.24	0.05	0.35	0.35	0.19	0.49	0.49
Volume/Cap:	0.32	0.80	1.58	1.58	0.32	0.32	1.22	1.58	1.58	1.58	1.22	1.22
Delay/Veh:	33.4	32.7	300.3	316.9	31.6	31.6	214.5	298	297.6	315.8	129	129.1
User DelAdj:	1.00	1.00	1.00	1.00	1.00	1.00	1.00	1.00	1.00	1.00	1.00	1.00
AdjDel/Veh:	33.4	32.7	300.3	316.9	31.6	31.6	214.5	298	297.6	315.8	129	129.1
LOS by Move:	C	C	F	F	C	C	F	F	F	F	F	F
HCM2kAvgQ:	3	15	70	27	4	4	8	81	81	42	59	59

Note: Queue reported is the number of cars per lane.

City of Murrieta General Plan
Future Proposed General Plan
PM Peak Hour

Level Of Service Computation Report
2000 HCM Operations Method (Future Volume Alternative)

Intersection #54 I-215 SB Ramps & Los Alamos Rd

Cycle (sec): 100 Critical Vol./Cap.(X): 1.435
Loss Time (sec): 0 (Y+R=4.0 sec) Average Delay (sec/veh): 157.8
Optimal Cycle: 180 Level Of Service: F

Street Name:	I-215 SB Ramps						Los Alamos Rd					
Approach:	North Bound			South Bound			East Bound			West Bound		
Movement:	L	T	R	L	T	R	L	T	R	L	T	R
Control:	Protected			Protected			Protected			Protected		
Rights:	Include			Include			Include			Include		
Min. Green:	0	0	0	0	0	0	0	0	0	0	0	0
Lanes:	0 0	0 0	0	1 0	1! 0	1	0 0	2 0	1	2 0	2 0	0
Volume Module:												
Base Vol:	0	0	0	537	0	1534	0	3121	446	146	1263	0
Growth Adj:	1.00	1.00	1.00	1.00	1.00	1.00	1.00	1.00	1.00	1.00	1.00	1.00
Initial Bse:	0	0	0	537	0	1534	0	3121	446	146	1263	0
Added Vol:	0	0	0	0	0	0	0	0	0	0	0	0
PasserByVol:	0	0	0	0	0	0	0	0	0	0	0	0
Initial Fut:	0	0	0	537	0	1534	0	3121	446	146	1263	0
User Adj:	1.00	1.00	1.00	1.00	1.00	1.00	1.00	1.00	1.00	1.00	1.00	1.00
PHF Adj:	1.00	1.00	1.00	1.00	1.00	1.00	1.00	1.00	1.00	1.00	1.00	1.00
PHF Volume:	0	0	0	537	0	1534	0	3121	446	146	1263	0
Reduct Vol:	0	0	0	0	0	0	0	0	0	0	0	0
Reduced Vol:	0	0	0	537	0	1534	0	3121	446	146	1263	0
PCE Adj:	1.00	1.00	1.00	1.00	1.00	1.00	1.00	1.00	1.00	1.00	1.00	1.00
MLF Adj:	1.00	1.00	1.00	1.00	1.00	1.00	1.00	1.00	1.00	1.00	1.00	1.00
FinalVolume:	0	0	0	537	0	1534	0	3121	446	146	1263	0
Saturation Flow Module:												
Sat/Lane:	1900	1900	1900	1900	1900	1900	1900	1900	1900	1900	1900	1900
Adjustment:	1.00	1.00	1.00	0.88	1.00	0.88	1.00	0.95	0.85	0.92	0.95	1.00
Lanes:	0.00	0.00	0.00	1.26	0.00	1.74	0.00	2.00	1.00	2.00	2.00	0.00
Final Sat.:	0	0	0	2099	0	2902	0	3610	1615	3502	3610	0
Capacity Analysis Module:												
Vol/Sat:	0.00	0.00	0.00	0.26	0.00	0.53	0.00	0.86	0.28	0.04	0.35	0.00
Crit Moves:						****		****		****		
Green/Cycle:	0.00	0.00	0.00	0.37	0.00	0.37	0.00	0.60	0.60	0.03	0.63	0.00
Volume/Cap:	0.00	0.00	0.00	0.69	0.00	1.43	0.00	1.43	0.46	1.43	0.55	0.00
Delay/Veh:	0.0	0.0	0.0	27.5	0.0	231.3	0.0	218	11.3	291.3	10.7	0.0
User DelAdj:	1.00	1.00	1.00	1.00	1.00	1.00	1.00	1.00	1.00	1.00	1.00	1.00
AdjDel/Veh:	0.0	0.0	0.0	27.5	0.0	231.3	0.0	218	11.3	291.3	10.7	0.0
LOS by Move:	A	A	A	C	A	F	A	F	B	F	B	A
HCM2kAvgQ:	0	0	0	12	0	61	0	111	8	7	12	0

Note: Queue reported is the number of cars per lane.

City of Murrieta General Plan
Future Proposed General Plan
PM Peak Hour

Level Of Service Computation Report
2000 HCM Operations Method (Future Volume Alternative)

Intersection #55 I-215 NB Ramps & Los Alamos Rd

Cycle (sec): 100 Critical Vol./Cap.(X): 0.908
Loss Time (sec): 0 (Y+R=4.0 sec) Average Delay (sec/veh): 24.4
Optimal Cycle: 180 Level Of Service: C

Street Name:	I-215 NB Ramps						Los Alamos Rd					
Approach:	North Bound			South Bound			East Bound			West Bound		
Movement:	L	T	R	L	T	R	L	T	R	L	T	R
Control:	Protected			Protected			Protected			Protected		
Rights:	Include			Include			Include			Include		
Min. Green:	0	0	0	0	0	0	0	0	0	0	0	0
Lanes:	1 0	0 0	1	0 0	0 0	0	2 0	3 0	0	0 0	2 0	1
Volume Module:												
Base Vol:	229	0	171	0	0	0	1589	1996	0	0	1182	331
Growth Adj:	1.00	1.00	1.00	1.00	1.00	1.00	1.00	1.00	1.00	1.00	1.00	1.00
Initial Bse:	229	0	171	0	0	0	1589	1996	0	0	1182	331
Added Vol:	0	0	0	0	0	0	0	0	0	0	0	0
PasserByVol:	0	0	0	0	0	0	0	0	0	0	0	0
Initial Fut:	229	0	171	0	0	0	1589	1996	0	0	1182	331
User Adj:	1.00	1.00	1.00	1.00	1.00	1.00	1.00	1.00	1.00	1.00	1.00	1.00
PHF Adj:	1.00	1.00	1.00	1.00	1.00	1.00	1.00	1.00	1.00	1.00	1.00	1.00
PHF Volume:	229	0	171	0	0	0	1589	1996	0	0	1182	331
Reduct Vol:	0	0	0	0	0	0	0	0	0	0	0	0
Reduced Vol:	229	0	171	0	0	0	1589	1996	0	0	1182	331
PCE Adj:	1.00	1.00	1.00	1.00	1.00	1.00	1.00	1.00	1.00	1.00	1.00	1.00
MLF Adj:	1.00	1.00	1.00	1.00	1.00	1.00	1.00	1.00	1.00	1.00	1.00	1.00
FinalVolume:	229	0	171	0	0	0	1589	1996	0	0	1182	331
Saturation Flow Module:												
Sat/Lane:	1900	1900	1900	1900	1900	1900	1900	1900	1900	1900	1900	1900
Adjustment:	0.95	1.00	0.85	1.00	1.00	1.00	0.92	0.91	1.00	1.00	0.95	0.85
Lanes:	1.00	0.00	1.00	0.00	0.00	0.00	2.00	3.00	0.00	0.00	2.00	1.00
Final Sat.:	1805	0	1615	0	0	0	3502	5187	0	0	3610	1615
Capacity Analysis Module:												
Vol/Sat:	0.13	0.00	0.11	0.00	0.00	0.00	0.45	0.38	0.00	0.00	0.33	0.20
Crit Moves:	****						****				****	
Green/Cycle:	0.14	0.00	0.14	0.00	0.00	0.00	0.50	0.86	0.00	0.00	0.36	0.36
Volume/Cap:	0.91	0.00	0.76	0.00	0.00	0.00	0.91	0.45	0.00	0.00	0.91	0.57
Delay/Veh:	75.7	0.0	55.2	0.0	0.0	0.0	30.3	1.7	0.0	0.0	39.9	27.0
User DelAdj:	1.00	1.00	1.00	1.00	1.00	1.00	1.00	1.00	1.00	1.00	1.00	1.00
AdjDel/Veh:	75.7	0.0	55.2	0.0	0.0	0.0	30.3	1.7	0.0	0.0	39.9	27.0
LOS by Move:	E	A	E	A	A	A	C	A	A	A	D	C
HCM2kAvgQ:	10	0	7	0	0	0	27	5	0	0	22	9

Note: Queue reported is the number of cars per lane.

City of Murrieta General Plan
Future Proposed General Plan
PM Peak Hour

Level Of Service Computation Report
2000 HCM Operations Method (Future Volume Alternative)

Intersection #56 Whitewood Rd & Los Alamos Rd

Cycle (sec): 100 Critical Vol./Cap.(X): 0.987
Loss Time (sec): 0 (Y+R=4.0 sec) Average Delay (sec/veh): 44.6
Optimal Cycle: 180 Level Of Service: D

Street Name:	Whitewood Rd						Los Alamos Rd					
Approach:	North Bound			South Bound			East Bound			West Bound		
Movement:	L	T	R	L	T	R	L	T	R	L	T	R
Control:	Protected			Protected			Protected			Protected		
Rights:	Include			Include			Include			Include		
Min. Green:	0	0	0	0	0	0	0	0	0	0	0	0
Lanes:	1 0	1 1	0	1 0	2 0	1	1 0	2 0	1	1 0	1 1	0
Volume Module:												
Base Vol:	139	582	34	35	578	567	867	361	298	65	228	48
Growth Adj:	1.00	1.00	1.00	1.00	1.00	1.00	1.00	1.00	1.00	1.00	1.00	1.00
Initial Bse:	139	582	34	35	578	567	867	361	298	65	228	48
Added Vol:	0	0	0	0	0	0	0	0	0	0	0	0
PasserByVol:	0	0	0	0	0	0	0	0	0	0	0	0
Initial Fut:	139	582	34	35	578	567	867	361	298	65	228	48
User Adj:	1.00	1.00	1.00	1.00	1.00	1.00	1.00	1.00	1.00	1.00	1.00	1.00
PHF Adj:	1.00	1.00	1.00	1.00	1.00	1.00	1.00	1.00	1.00	1.00	1.00	1.00
PHF Volume:	139	582	34	35	578	567	867	361	298	65	228	48
Reduct Vol:	0	0	0	0	0	0	0	0	0	0	0	0
Reduced Vol:	139	582	34	35	578	567	867	361	298	65	228	48
PCE Adj:	1.00	1.00	1.00	1.00	1.00	1.00	1.00	1.00	1.00	1.00	1.00	1.00
MLF Adj:	1.00	1.00	1.00	1.00	1.00	1.00	1.00	1.00	1.00	1.00	1.00	1.00
FinalVolume:	139	582	34	35	578	567	867	361	298	65	228	48
Saturation Flow Module:												
Sat/Lane:	1900	1900	1900	1900	1900	1900	1900	1900	1900	1900	1900	1900
Adjustment:	0.95	0.94	0.94	0.95	0.95	0.85	0.95	0.95	0.85	0.95	0.93	0.93
Lanes:	1.00	1.89	0.11	1.00	2.00	1.00	1.00	2.00	1.00	1.00	1.65	0.35
Final Sat.:	1805	3383	198	1805	3610	1615	1805	3610	1615	1805	2905	612
Capacity Analysis Module:												
Vol/Sat:	0.08	0.17	0.17	0.02	0.16	0.35	0.48	0.10	0.18	0.04	0.08	0.08
Crit Moves:	****					****	****				****	
Green/Cycle:	0.08	0.39	0.39	0.04	0.36	0.36	0.49	0.47	0.47	0.09	0.08	0.08
Volume/Cap:	0.99	0.44	0.44	0.44	0.45	0.99	0.99	0.21	0.39	0.39	0.99	0.99
Delay/Veh:	117.7	22.7	22.7	50.5	25.0	66.1	52.4	15.4	17.3	44.2	96.0	96.0
User DelAdj:	1.00	1.00	1.00	1.00	1.00	1.00	1.00	1.00	1.00	1.00	1.00	1.00
AdjDel/Veh:	117.7	22.7	22.7	50.5	25.0	66.1	52.4	15.4	17.3	44.2	96.0	96.0
LOS by Move:	F	C	C	D	C	E	D	B	B	D	F	F
HCM2kAvgQ:	8	7	7	2	7	24	34	3	6	2	8	8

Note: Queue reported is the number of cars per lane.

City of Murrieta General Plan
Future Proposed General Plan
PM Peak Hour

Level Of Service Computation Report
2000 HCM Operations Method (Future Volume Alternative)

Intersection #57 Whitewood Rd & Murrieta Hot Springs Rd

Cycle (sec): 100 Critical Vol./Cap.(X): 1.149
Loss Time (sec): 0 (Y+R=4.0 sec) Average Delay (sec/veh): 88.7
Optimal Cycle: 180 Level Of Service: F

Street Name:	Whitewood Rd						Murrieta Hot Springs Rd					
Approach:	North Bound			South Bound			East Bound			West Bound		
Movement:	L	T	R	L	T	R	L	T	R	L	T	R
Control:	Protected			Protected			Protected			Protected		
Rights:	Include			Include			Include			Include		
Min. Green:	0	0	0	0	0	0	0	0	0	0	0	0
Lanes:	1 0	1 1	0	1 0	1 1	0	1 0	2 1	0	1 0	2 1	0
Volume Module:												
Base Vol:	434	314	529	362	266	233	166	1645	172	401	2240	457
Growth Adj:	1.00	1.00	1.00	1.00	1.00	1.00	1.00	1.00	1.00	1.00	1.00	1.00
Initial Bse:	434	314	529	362	266	233	166	1645	172	401	2240	457
Added Vol:	0	0	0	0	0	0	0	0	0	0	0	0
PasserByVol:	0	0	0	0	0	0	0	0	0	0	0	0
Initial Fut:	434	314	529	362	266	233	166	1645	172	401	2240	457
User Adj:	1.00	1.00	1.00	1.00	1.00	1.00	1.00	1.00	1.00	1.00	1.00	1.00
PHF Adj:	1.00	1.00	1.00	1.00	1.00	1.00	1.00	1.00	1.00	1.00	1.00	1.00
PHF Volume:	434	314	529	362	266	233	166	1645	172	401	2240	457
Reduct Vol:	0	0	0	0	0	0	0	0	0	0	0	0
Reduced Vol:	434	314	529	362	266	233	166	1645	172	401	2240	457
PCE Adj:	1.00	1.00	1.00	1.00	1.00	1.00	1.00	1.00	1.00	1.00	1.00	1.00
MLF Adj:	1.00	1.00	1.00	1.00	1.00	1.00	1.00	1.00	1.00	1.00	1.00	1.00
FinalVolume:	434	314	529	362	266	233	166	1645	172	401	2240	457
Saturation Flow Module:												
Sat/Lane:	1900	1900	1900	1900	1900	1900	1900	1900	1900	1900	1900	1900
Adjustment:	0.95	0.86	0.86	0.95	0.88	0.88	0.95	0.90	0.90	0.95	0.89	0.89
Lanes:	1.00	1.00	1.00	1.00	1.07	0.93	1.00	2.72	0.28	1.00	2.49	0.51
Final Sat.:	1805	1635	1635	1805	1790	1568	1805	4630	484	1805	4200	857
Capacity Analysis Module:												
Vol/Sat:	0.24	0.19	0.32	0.20	0.15	0.15	0.09	0.36	0.36	0.22	0.53	0.53
Crit Moves:			****	****			****				****	
Green/Cycle:	0.28	0.28	0.28	0.17	0.17	0.17	0.08	0.33	0.33	0.21	0.46	0.46
Volume/Cap:	0.85	0.68	1.15	1.15	0.85	0.85	1.15	1.06	1.06	1.06	1.15	1.15
Delay/Veh:	47.1	33.5	118.5	138.8	51.7	51.7	166.6	73.4	73.4	103.0	99.4	99.4
User DelAdj:	1.00	1.00	1.00	1.00	1.00	1.00	1.00	1.00	1.00	1.00	1.00	1.00
AdjDel/Veh:	47.1	33.5	118.5	138.8	51.7	51.7	166.6	73.4	73.4	103.0	99.4	99.4
LOS by Move:	D	C	F	F	D	D	F	E	E	F	F	F
HCM2kAvgQ:	15	10	29	20	11	11	11	30	30	20	49	49

Note: Queue reported is the number of cars per lane.

City of Murrieta General Plan
Future Proposed General Plan
PM Peak Hour

Level Of Service Computation Report
2000 HCM Operations Method (Future Volume Alternative)

Intersection #59 Nutmeg St & Clinton Keith Rd

Cycle (sec): 100 Critical Vol./Cap.(X): 1.152
Loss Time (sec): 0 (Y+R=4.0 sec) Average Delay (sec/veh): 78.4
Optimal Cycle: 180 Level Of Service: E

Street Name:	Nutmeg St						Clinton Keith Rd					
Approach:	North Bound			South Bound			East Bound			West Bound		
Movement:	L -	T -	R	L -	T -	R	L -	T -	R	L -	T -	R
Control:	Protected			Protected			Protected			Protected		
Rights:	Include			Include			Include			Include		
Min. Green:	0	0	0	0	0	0	0	0	0	0	0	0
Lanes:	1 0	1	1 0	1 0	1	1 0	1 0	2	1 0	1 0	2	1 0
Volume Module:												
Base Vol:	65	83	494	318	32	58	92	1775	61	552	2056	380
Growth Adj:	1.00	1.00	1.00	1.00	1.00	1.00	1.00	1.00	1.00	1.00	1.00	1.00
Initial Bse:	65	83	494	318	32	58	92	1775	61	552	2056	380
Added Vol:	0	0	0	0	0	0	0	0	0	0	0	0
PasserByVol:	0	0	0	0	0	0	0	0	0	0	0	0
Initial Fut:	65	83	494	318	32	58	92	1775	61	552	2056	380
User Adj:	1.00	1.00	1.00	1.00	1.00	1.00	1.00	1.00	1.00	1.00	1.00	1.00
PHF Adj:	1.00	1.00	1.00	1.00	1.00	1.00	1.00	1.00	1.00	1.00	1.00	1.00
PHF Volume:	65	83	494	318	32	58	92	1775	61	552	2056	380
Reduct Vol:	0	0	0	0	0	0	0	0	0	0	0	0
Reduced Vol:	65	83	494	318	32	58	92	1775	61	552	2056	380
PCE Adj:	1.00	1.00	1.00	1.00	1.00	1.00	1.00	1.00	1.00	1.00	1.00	1.00
MLF Adj:	1.00	1.00	1.00	1.00	1.00	1.00	1.00	1.00	1.00	1.00	1.00	1.00
FinalVolume:	65	83	494	318	32	58	92	1775	61	552	2056	380
Saturation Flow Module:												
Sat/Lane:	1900	1900	1900	1900	1900	1900	1900	1900	1900	1900	1900	1900
Adjustment:	0.95	0.83	0.83	0.95	0.86	0.86	0.95	0.91	0.91	0.95	0.89	0.89
Lanes:	1.00	1.00	1.00	1.00	1.00	1.00	1.00	2.90	0.10	1.00	2.53	0.47
Final Sat.:	1805	1574	1574	1805	1630	1630	1805	4990	171	1805	4277	791
Capacity Analysis Module:												
Vol/Sat:	0.04	0.05	0.31	0.18	0.02	0.04	0.05	0.36	0.36	0.31	0.48	0.48
Crit Moves:			****	****				****		****		
Green/Cycle:	0.21	0.27	0.27	0.15	0.21	0.21	0.06	0.31	0.31	0.27	0.52	0.52
Volume/Cap:	0.17	0.19	1.15	1.15	0.09	0.17	0.93	1.15	1.15	1.15	0.93	0.93
Delay/Veh:	32.2	28.0	125.5	143.8	31.8	32.4	113.5	110	110.5	126.6	28.5	28.5
User DelAdj:	1.00	1.00	1.00	1.00	1.00	1.00	1.00	1.00	1.00	1.00	1.00	1.00
AdjDel/Veh:	32.2	28.0	125.5	143.8	31.8	32.4	113.5	110	110.5	126.6	28.5	28.5
LOS by Move:	C	C	F	F	C	C	F	F	F	F	C	C
HCM2kAvgQ:	2	2	28	18	1	2	6	35	35	29	30	30

Note: Queue reported is the number of cars per lane.

City of Murrieta General Plan
Future Proposed General Plan
PM Peak Hour

Level Of Service Computation Report
2000 HCM Operations Method (Future Volume Alternative)

Intersection #60 Murrieta Oaks Ave-Mitchell Rd & Clinton Keith Rd

Cycle (sec): 100 Critical Vol./Cap.(X): 1.262
Loss Time (sec): 0 (Y+R=4.0 sec) Average Delay (sec/veh): 120.7
Optimal Cycle: 180 Level Of Service: F

Street Name:	Murrieta Oaks Ave-Mitchell Rd						Clinton Keith Rd					
Approach:	North Bound			South Bound			East Bound			West Bound		
Movement:	L -	T -	R	L -	T -	R	L -	T -	R	L -	T -	R
Control:	Protected			Protected			Protected			Protected		
Rights:	Include			Include			Include			Include		
Min. Green:	0	0	0	0	0	0	0	0	0	0	0	0
Lanes:	1 0	0	1 0	1 0	1	0 1	1 0	2	1 0	1 0	2	1 0
Volume Module:												
Base Vol:	16	134	19	103	180	900	135	3159	18	27	2766	395
Growth Adj:	1.00	1.00	1.00	1.00	1.00	1.00	1.00	1.00	1.00	1.00	1.00	1.00
Initial Bse:	16	134	19	103	180	900	135	3159	18	27	2766	395
Added Vol:	0	0	0	0	0	0	0	0	0	0	0	0
PasserByVol:	0	0	0	0	0	0	0	0	0	0	0	0
Initial Fut:	16	134	19	103	180	900	135	3159	18	27	2766	395
User Adj:	1.00	1.00	1.00	1.00	1.00	1.00	1.00	1.00	1.00	1.00	1.00	1.00
PHF Adj:	1.00	1.00	1.00	1.00	1.00	1.00	1.00	1.00	1.00	1.00	1.00	1.00
PHF Volume:	16	134	19	103	180	900	135	3159	18	27	2766	395
Reduct Vol:	0	0	0	0	0	0	0	0	0	0	0	0
Reduced Vol:	16	134	19	103	180	900	135	3159	18	27	2766	395
PCE Adj:	1.00	1.00	1.00	1.00	1.00	1.00	1.00	1.00	1.00	1.00	1.00	1.00
MLF Adj:	1.00	1.00	1.00	1.00	1.00	1.00	1.00	1.00	1.00	1.00	1.00	1.00
FinalVolume:	16	134	19	103	180	900	135	3159	18	27	2766	395
Saturation Flow Module:												
Sat/Lane:	1900	1900	1900	1900	1900	1900	1900	1900	1900	1900	1900	1900
Adjustment:	0.95	0.98	0.98	0.95	1.00	0.85	0.95	0.91	0.91	0.95	0.89	0.89
Lanes:	1.00	0.88	0.12	1.00	1.00	1.00	1.00	2.98	0.02	1.00	2.63	0.37
Final Sat.:	1805	1632	231	1805	1900	1615	1805	5152	29	1805	4453	636
Capacity Analysis Module:												
Vol/Sat:	0.01	0.08	0.08	0.06	0.09	0.56	0.07	0.61	0.61	0.01	0.62	0.62
Crit Moves:	****					****	****				****	
Green/Cycle:	0.01	0.26	0.26	0.18	0.44	0.44	0.06	0.54	0.54	0.01	0.49	0.49
Volume/Cap:	1.26	0.31	0.31	0.31	0.21	1.26	1.26	1.14	1.14	1.14	1.26	1.26
Delay/Veh:	398.7	29.8	29.8	35.8	17.4	157.0	220.2	90.5	90.5	280.3	147	146.7
User DelAdj:	1.00	1.00	1.00	1.00	1.00	1.00	1.00	1.00	1.00	1.00	1.00	1.00
AdjDel/Veh:	398.7	29.8	29.8	35.8	17.4	157.0	220.2	90.5	90.5	280.3	147	146.7
LOS by Move:	F	C	C	D	B	F	F	F	F	F	F	F
HCM2kAvgQ:	2	4	4	3	3	52	10	56	56	3	66	66

Note: Queue reported is the number of cars per lane.

City of Murrieta General Plan
Future Proposed General Plan
PM Peak Hour

Level Of Service Computation Report
2000 HCM Operations Method (Future Volume Alternative)

Intersection #61 I-215 SB Ramps & Scott Rd

Cycle (sec): 100 Critical Vol./Cap.(X): 0.387
Loss Time (sec): 0 (Y+R=4.0 sec) Average Delay (sec/veh): 8.1
Optimal Cycle: 37 Level Of Service: A

Street Name:	I-215 SB Ramps						Scott Rd					
Approach:	North Bound			South Bound			East Bound			West Bound		
Movement:	L	T	R	L	T	R	L	T	R	L	T	R
Control:	Protected			Protected			Protected			Protected		
Rights:	Include			Include			Ignore			Ignore		
Min. Green:	0	0	0	0	0	0	0	0	0	0	0	0
Lanes:	0 0	0 0	0	2 0	0 0	2	0 0	4 0	1	0 0	3 0	2
Volume Module:												
Base Vol:	0	0	0	160	0	261	0	756	392	0	1529	445
Growth Adj:	1.00	1.00	1.00	1.00	1.00	1.00	1.00	1.00	1.00	1.00	1.00	1.00
Initial Bse:	0	0	0	160	0	261	0	756	392	0	1529	445
Added Vol:	0	0	0	0	0	0	0	0	0	0	0	0
PasserByVol:	0	0	0	0	0	0	0	0	0	0	0	0
Initial Fut:	0	0	0	160	0	261	0	756	392	0	1529	445
User Adj:	1.00	1.00	1.00	1.00	1.00	1.00	1.00	1.00	0.00	1.00	1.00	0.00
PHF Adj:	1.00	1.00	1.00	1.00	1.00	1.00	1.00	1.00	0.00	1.00	1.00	0.00
PHF Volume:	0	0	0	160	0	261	0	756	0	0	1529	0
Reduct Vol:	0	0	0	0	0	0	0	0	0	0	0	0
Reduced Vol:	0	0	0	160	0	261	0	756	0	0	1529	0
PCE Adj:	1.00	1.00	1.00	1.00	1.00	1.00	1.00	1.00	0.00	1.00	1.00	0.00
MLF Adj:	1.00	1.00	1.00	1.00	1.00	1.00	1.00	1.00	0.00	1.00	1.00	0.00
FinalVolume:	0	0	0	160	0	261	0	756	0	0	1529	0
Saturation Flow Module:												
Sat/Lane:	1900	1900	1900	1900	1900	1900	1900	1900	1900	1900	1900	1900
Adjustment:	1.00	1.00	1.00	0.92	1.00	0.75	1.00	0.91	1.00	1.00	0.91	0.88
Lanes:	0.00	0.00	0.00	2.00	0.00	2.00	0.00	4.00	1.00	0.00	3.00	2.00
Final Sat.:	0	0	0	3502	0	2842	0	6916	1900	0	5187	3344
Capacity Analysis Module:												
Vol/Sat:	0.00	0.00	0.00	0.05	0.00	0.09	0.00	0.11	0.00	0.00	0.29	0.00
Crit Moves:						****	****				****	
Green/Cycle:	0.00	0.00	0.00	0.24	0.00	0.24	0.00	0.76	0.00	0.00	0.76	0.00
Volume/Cap:	0.00	0.00	0.00	0.19	0.00	0.39	0.00	0.14	0.00	0.00	0.39	0.00
Delay/Veh:	0.0	0.0	0.0	30.6	0.0	32.4	0.0	3.2	0.0	0.0	4.1	0.0
User DelAdj:	1.00	1.00	1.00	1.00	1.00	1.00	1.00	1.00	1.00	1.00	1.00	1.00
AdjDel/Veh:	0.0	0.0	0.0	30.6	0.0	32.4	0.0	3.2	0.0	0.0	4.1	0.0
LOS by Move:	A	A	A	C	A	C	A	A	A	A	A	A
HCM2kAvgQ:	0	0	0	2	0	4	0	2	0	0	6	0

Note: Queue reported is the number of cars per lane.

City of Murrieta General Plan
Future Proposed General Plan
PM Peak Hour

Level Of Service Computation Report
2000 HCM Operations Method (Future Volume Alternative)

Intersection #62 I-215 NB Ramps & Scott Rd

Cycle (sec): 100 Critical Vol./Cap.(X): 0.589
Loss Time (sec): 0 (Y+R=4.0 sec) Average Delay (sec/veh): 16.2
Optimal Cycle: 56 Level Of Service: B

Street Name:	I-215 NB Ramps						Scott Rd					
Approach:	North Bound			South Bound			East Bound			West Bound		
Movement:	L	T	R	L	T	R	L	T	R	L	T	R
Control:	Protected			Protected			Protected			Protected		
Rights:	Include			Include			Include			Ovl		
Min. Green:	0	0	0	0	0	0	0	0	0	0	0	0
Lanes:	0 0	0 1	2	0 0	0 0	2	2 0	4 0	0	0 0	3 0	2
Volume Module:												
Base Vol:	0	7	963	0	0	368	80	1012	0	0	1761	395
Growth Adj:	1.00	1.00	1.00	1.00	1.00	1.00	1.00	1.00	1.00	1.00	1.00	1.00
Initial Bse:	0	7	963	0	0	368	80	1012	0	0	1761	395
Added Vol:	0	0	0	0	0	0	0	0	0	0	0	0
PasserByVol:	0	0	0	0	0	0	0	0	0	0	0	0
Initial Fut:	0	7	963	0	0	368	80	1012	0	0	1761	395
User Adj:	1.00	1.00	1.00	1.00	1.00	1.00	1.00	1.00	1.00	1.00	1.00	1.00
PHF Adj:	1.00	1.00	1.00	1.00	1.00	1.00	1.00	1.00	1.00	1.00	1.00	1.00
PHF Volume:	0	7	963	0	0	368	80	1012	0	0	1761	395
Reduct Vol:	0	0	0	0	0	0	0	0	0	0	0	0
Reduced Vol:	0	7	963	0	0	368	80	1012	0	0	1761	395
PCE Adj:	1.00	1.00	1.00	1.00	1.00	1.00	1.00	1.00	1.00	1.00	1.00	1.00
MLF Adj:	1.00	1.00	1.00	1.00	1.00	1.00	1.00	1.00	1.00	1.00	1.00	1.00
FinalVolume:	0	7	963	0	0	368	80	1012	0	0	1761	395
Saturation Flow Module:												
Sat/Lane:	1900	1900	1900	1900	1900	1900	1900	1900	1900	1900	1900	1900
Adjustment:	1.00	0.85	0.75	1.00	1.00	0.75	0.92	0.91	1.00	1.00	0.91	0.75
Lanes:	0.00	0.02	2.98	0.00	0.00	2.00	2.00	4.00	0.00	0.00	3.00	2.00
Final Sat.:	0	31	4241	0	0	2842	3502	6916	0	0	5187	2842
Capacity Analysis Module:												
Vol/Sat:	0.00	0.23	0.23	0.00	0.00	0.13	0.02	0.15	0.00	0.00	0.34	0.14
Crit Moves:		****		****			****				****	
Green/Cycle:	0.00	0.39	0.39	0.00	0.00	0.39	0.04	0.61	0.00	0.00	0.58	0.58
Volume/Cap:	0.00	0.59	0.59	0.00	0.00	0.34	0.59	0.24	0.00	0.00	0.59	0.24
Delay/Veh:	0.0	25.0	25.0	0.0	0.0	21.9	53.9	8.7	0.0	0.0	13.9	10.5
User DelAdj:	1.00	1.00	1.00	1.00	1.00	1.00	1.00	1.00	1.00	1.00	1.00	1.00
AdjDel/Veh:	0.0	25.0	25.0	0.0	0.0	21.9	53.9	8.7	0.0	0.0	13.9	10.5
LOS by Move:	A	C	C	A	A	C	D	A	A	A	B	B
HCM2kAvgQ:	0	9	9	0	0	5	2	4	0	0	13	3

Note: Queue reported is the number of cars per lane.

City of Murrieta General Plan
Future Proposed General Plan
PM Peak Hour

Level Of Service Computation Report
2000 HCM Operations Method (Future Volume Alternative)

Intersection #102 Leon Road & Scott Road

Cycle (sec): 100 Critical Vol./Cap.(X): 0.969
Loss Time (sec): 0 (Y+R=4.0 sec) Average Delay (sec/veh): 46.7
Optimal Cycle: 180 Level Of Service: D

Street Name:	Leon Road						Scott Road					
Approach:	North Bound			South Bound			East Bound			West Bound		
Movement:	L	T	R	L	T	R	L	T	R	L	T	R
Control:	Protected			Protected			Protected			Protected		
Rights:	Include			Include			Include			Include		
Min. Green:	0	0	0	0	0	0	0	0	0	0	0	0
Lanes:	1 0	1 1	0	1 0	1 1	0	1 0	2 1	0	1 0	2 1	0
Volume Module:												
Base Vol:	563	411	18	63	209	373	580	525	505	4	374	155
Growth Adj:	1.00	1.00	1.00	1.00	1.00	1.00	1.00	1.00	1.00	1.00	1.00	1.00
Initial Bse:	563	411	18	63	209	373	580	525	505	4	374	155
Added Vol:	0	0	0	0	0	0	0	0	0	0	0	0
PasserByVol:	0	0	0	0	0	0	0	0	0	0	0	0
Initial Fut:	563	411	18	63	209	373	580	525	505	4	374	155
User Adj:	1.00	1.00	1.00	1.00	1.00	1.00	1.00	1.00	1.00	1.00	1.00	1.00
PHF Adj:	1.00	1.00	1.00	1.00	1.00	1.00	1.00	1.00	1.00	1.00	1.00	1.00
PHF Volume:	563	411	18	63	209	373	580	525	505	4	374	155
Reduct Vol:	0	0	0	0	0	0	0	0	0	0	0	0
Reduced Vol:	563	411	18	63	209	373	580	525	505	4	374	155
PCE Adj:	1.00	1.00	1.00	1.00	1.00	1.00	1.00	1.00	1.00	1.00	1.00	1.00
MLF Adj:	1.00	1.00	1.00	1.00	1.00	1.00	1.00	1.00	1.00	1.00	1.00	1.00
FinalVolume:	563	411	18	63	209	373	580	525	505	4	374	155
Saturation Flow Module:												
Sat/Lane:	1900	1900	1900	1900	1900	1900	1900	1900	1900	1900	1900	1900
Adjustment:	0.95	0.94	0.94	0.95	0.86	0.86	0.95	0.84	0.84	0.95	0.87	0.87
Lanes:	1.00	1.92	0.08	1.00	1.00	1.00	1.00	2.00	1.00	1.00	2.12	0.88
Final Sat.:	1805	3438	151	1805	1632	1632	1805	3206	1603	1805	3506	1453
Capacity Analysis Module:												
Vol/Sat:	0.31	0.12	0.12	0.03	0.13	0.23	0.32	0.16	0.32	0.00	0.11	0.11
Crit Moves:	****					****	****				****	
Green/Cycle:	0.32	0.43	0.43	0.13	0.24	0.24	0.33	0.44	0.44	0.00	0.11	0.11
Volume/Cap:	0.97	0.28	0.28	0.28	0.54	0.97	0.97	0.37	0.72	0.72	0.97	0.97
Delay/Veh:	62.8	18.4	18.4	40.2	34.0	66.7	61.8	18.9	24.8	237.4	74.8	74.8
User DelAdj:	1.00	1.00	1.00	1.00	1.00	1.00	1.00	1.00	1.00	1.00	1.00	1.00
AdjDel/Veh:	62.8	18.4	18.4	40.2	34.0	66.7	61.8	18.9	24.8	237.4	74.8	74.8
LOS by Move:	E	B	B	D	C	E	E	B	C	F	E	E
HCM2kAvgQ:	23	4	4	2	6	17	23	6	15	1	10	10

Note: Queue reported is the number of cars per lane.

City of Murrieta General Plan
Future Proposed General Plan
PM Peak Hour

Level Of Service Computation Report
2000 HCM Operations Method (Future Volume Alternative)

Intersection #104 Antelope Road & Keller Road

Cycle (sec): 100 Critical Vol./Cap.(X): 0.976
Loss Time (sec): 0 (Y+R=4.0 sec) Average Delay (sec/veh): 49.9
Optimal Cycle: 180 Level Of Service: D

Street Name:	Antelope Road						Keller Road					
Approach:	North Bound			South Bound			East Bound			West Bound		
Movement:	L	T	R	L	T	R	L	T	R	L	T	R
Control:	Protected			Protected			Protected			Protected		
Rights:	Include			Include			Include			Include		
Min. Green:	0	0	0	0	0	0	0	0	0	0	0	0
Lanes:	2 0	2 0	1	1 0	2 0	1	2 0	3 0	1	1 0	3 0	1
Volume Module:												
Base Vol:	923	556	870	74	72	563	828	753	209	228	658	167
Growth Adj:	1.00	1.00	1.00	1.00	1.00	1.00	1.00	1.00	1.00	1.00	1.00	1.00
Initial Bse:	923	556	870	74	72	563	828	753	209	228	658	167
Added Vol:	0	0	0	0	0	0	0	0	0	0	0	0
PasserByVol:	0	0	0	0	0	0	0	0	0	0	0	0
Initial Fut:	923	556	870	74	72	563	828	753	209	228	658	167
User Adj:	1.00	1.00	1.00	1.00	1.00	1.00	1.00	1.00	1.00	1.00	1.00	1.00
PHF Adj:	1.00	1.00	1.00	1.00	1.00	1.00	1.00	1.00	1.00	1.00	1.00	1.00
PHF Volume:	923	556	870	74	72	563	828	753	209	228	658	167
Reduct Vol:	0	0	0	0	0	0	0	0	0	0	0	0
Reduced Vol:	923	556	870	74	72	563	828	753	209	228	658	167
PCE Adj:	1.00	1.00	1.00	1.00	1.00	1.00	1.00	1.00	1.00	1.00	1.00	1.00
MLF Adj:	1.00	1.00	1.00	1.00	1.00	1.00	1.00	1.00	1.00	1.00	1.00	1.00
FinalVolume:	923	556	870	74	72	563	828	753	209	228	658	167
Saturation Flow Module:												
Sat/Lane:	1900	1900	1900	1900	1900	1900	1900	1900	1900	1900	1900	1900
Adjustment:	0.92	0.95	0.85	0.95	0.95	0.85	0.92	0.91	0.85	0.95	0.91	0.85
Lanes:	2.00	2.00	1.00	1.00	2.00	1.00	2.00	3.00	1.00	1.00	3.00	1.00
Final Sat.:	3502	3610	1615	1805	3610	1615	3502	5187	1615	1805	5187	1615
Capacity Analysis Module:												
Vol/Sat:	0.26	0.15	0.54	0.04	0.02	0.35	0.24	0.15	0.13	0.13	0.13	0.10
Crit Moves:	****					****	****				****	
Green/Cycle:	0.27	0.58	0.58	0.04	0.36	0.36	0.24	0.20	0.20	0.17	0.13	0.13
Volume/Cap:	0.98	0.26	0.92	0.92	0.06	0.98	0.98	0.73	0.65	0.73	0.98	0.80
Delay/Veh:	59.5	10.3	33.2	122.6	21.1	62.9	62.5	40.2	41.5	47.5	71.8	60.8
User DelAdj:	1.00	1.00	1.00	1.00	1.00	1.00	1.00	1.00	1.00	1.00	1.00	1.00
AdjDel/Veh:	59.5	10.3	33.2	122.6	21.1	62.9	62.5	40.2	41.5	47.5	71.8	60.8
LOS by Move:	E	B	C	F	C	E	E	D	D	D	E	E
HCM2kAvgQ:	20	4	29	5	1	23	18	9	7	8	12	7

Note: Queue reported is the number of cars per lane.

City of Murrieta General Plan
Future Proposed General Plan
PM Peak Hour

Level Of Service Computation Report
2000 HCM Operations Method (Future Volume Alternative)

Intersection #105 Menifee Road - Meadowlark Road & Keller Road

Cycle (sec): 100 Critical Vol./Cap.(X): 0.993
Loss Time (sec): 0 (Y+R=4.0 sec) Average Delay (sec/veh): 47.6
Optimal Cycle: 180 Level Of Service: D

Street Name:	Menifee Road - Meadowlark Road						Keller Road					
Approach:	North Bound			South Bound			East Bound			West Bound		
Movement:	L - T - R			L - T - R			L - T - R			L - T - R		
Control:	Protected			Protected			Protected			Protected		
Rights:	Include			Include			Include			Include		
Min. Green:	0	0	0	0	0	0	0	0	0	0	0	0
Lanes:	1 0	1	1 0	1 0	1	1 0	2 0	1	1 0	1 0	1	1 0
Volume Module:												
Base Vol:	174	1077	822	86	680	363	765	314	468	176	392	121
Growth Adj:	1.00	1.00	1.00	1.00	1.00	1.00	1.00	1.00	1.00	1.00	1.00	1.00
Initial Bse:	174	1077	822	86	680	363	765	314	468	176	392	121
Added Vol:	0	0	0	0	0	0	0	0	0	0	0	0
PasserByVol:	0	0	0	0	0	0	0	0	0	0	0	0
Initial Fut:	174	1077	822	86	680	363	765	314	468	176	392	121
User Adj:	1.00	1.00	1.00	1.00	1.00	1.00	1.00	1.00	1.00	1.00	1.00	1.00
PHF Adj:	1.00	1.00	1.00	1.00	1.00	1.00	1.00	1.00	1.00	1.00	1.00	1.00
PHF Volume:	174	1077	822	86	680	363	765	314	468	176	392	121
Reduct Vol:	0	0	0	0	0	0	0	0	0	0	0	0
Reduced Vol:	174	1077	822	86	680	363	765	314	468	176	392	121
PCE Adj:	1.00	1.00	1.00	1.00	1.00	1.00	1.00	1.00	1.00	1.00	1.00	1.00
MLF Adj:	1.00	1.00	1.00	1.00	1.00	1.00	1.00	1.00	1.00	1.00	1.00	1.00
FinalVolume:	174	1077	822	86	680	363	765	314	468	176	392	121
Saturation Flow Module:												
Sat/Lane:	1900	1900	1900	1900	1900	1900	1900	1900	1900	1900	1900	1900
Adjustment:	0.95	0.89	0.89	0.95	0.90	0.90	0.92	0.86	0.86	0.95	0.92	0.92
Lanes:	1.00	1.13	0.87	1.00	1.30	0.70	2.00	1.00	1.00	1.00	1.53	0.47
Final Sat.:	1805	1914	1461	1805	2231	1191	3502	1643	1643	1805	2662	822
Capacity Analysis Module:												
Vol/Sat:	0.10	0.56	0.56	0.05	0.30	0.30	0.22	0.19	0.28	0.10	0.15	0.15
Crit Moves:		****		****					****	****		
Green/Cycle:	0.15	0.57	0.57	0.05	0.47	0.47	0.23	0.29	0.29	0.10	0.16	0.16
Volume/Cap:	0.65	0.99	0.99	0.99	0.65	0.65	0.95	0.67	0.99	0.99	0.95	0.95
Delay/Veh:	45.9	40.3	40.3	141.7	21.4	21.4	58.2	32.9	65.7	110.4	68.4	68.4
User DelAdj:	1.00	1.00	1.00	1.00	1.00	1.00	1.00	1.00	1.00	1.00	1.00	1.00
AdjDel/Veh:	45.9	40.3	40.3	141.7	21.4	21.4	58.2	32.9	65.7	110.4	68.4	68.4
LOS by Move:	D	D	D	F	C	C	E	C	E	F	E	E
HCM2kAvgQ:	6	38	38	6	13	13	17	10	21	9	12	12

Note: Queue reported is the number of cars per lane.

City of Murrieta General Plan
Future Proposed General Plan
PM Peak Hour

Level Of Service Computation Report
2000 HCM Operations Method (Future Volume Alternative)

Intersection #107 Leon Road & Keller Road

Cycle (sec): 100 Critical Vol./Cap.(X): 0.359
Loss Time (sec): 0 (Y+R=4.0 sec) Average Delay (sec/veh): 26.2
Optimal Cycle: 44 Level Of Service: C

Street Name:	Leon Road						Keller Road					
Approach:	North Bound			South Bound			East Bound			West Bound		
Movement:	L - T - R			L - T - R			L - T - R			L - T - R		
Control:	Protected			Permitted			Protected			Permitted		
Rights:	Include			Include			Include			Include		
Min. Green:	0	0	0	0	0	0	0	0	0	0	0	0
Lanes:	1 0	1	1 0	1 0	1	1 0	1 0	1	1 0	1 0	1	1 0
Volume Module:												
Base Vol:	62	926	1	1	688	78	88	81	281	17	190	3
Growth Adj:	1.00	1.00	1.00	1.00	1.00	1.00	1.00	1.00	1.00	1.00	1.00	1.00
Initial Bse:	62	926	1	1	688	78	88	81	281	17	190	3
Added Vol:	0	0	0	0	0	0	0	0	0	0	0	0
PasserByVol:	0	0	0	0	0	0	0	0	0	0	0	0
Initial Fut:	62	926	1	1	688	78	88	81	281	17	190	3
User Adj:	1.00	1.00	1.00	1.00	1.00	1.00	1.00	1.00	1.00	1.00	1.00	1.00
PHF Adj:	1.00	1.00	1.00	1.00	1.00	1.00	1.00	1.00	1.00	1.00	1.00	1.00
PHF Volume:	62	926	1	1	688	78	88	81	281	17	190	3
Reduct Vol:	0	0	0	0	0	0	0	0	0	0	0	0
Reduced Vol:	62	926	1	1	688	78	88	81	281	17	190	3
PCE Adj:	1.00	1.00	1.00	1.00	1.00	1.00	1.00	1.00	1.00	1.00	1.00	1.00
MLF Adj:	1.00	1.00	1.00	1.00	1.00	1.00	1.00	1.00	1.00	1.00	1.00	1.00
FinalVolume:	62	926	1	1	688	78	88	81	281	17	190	3
Saturation Flow Module:												
Sat/Lane:	1900	1900	1900	1900	1900	1900	1900	1900	1900	1900	1900	1900
Adjustment:	0.95	0.95	0.95	0.25	0.94	0.94	0.95	0.84	0.84	0.43	0.95	0.95
Lanes:	1.00	1.99	0.01	1.00	1.80	0.20	1.00	1.00	1.00	1.00	1.97	0.03
Final Sat.:	1805	3606	4	483	3194	362	1805	1596	1596	815	3547	56
Capacity Analysis Module:												
Vol/Sat:	0.03	0.26	0.26	0.00	0.22	0.22	0.05	0.05	0.18	0.02	0.05	0.05
Crit Moves:		****					****				****	
Green/Cycle:	0.45	0.82	0.82	0.37	0.37	0.37	0.08	0.18	0.18	0.09	0.09	0.09
Volume/Cap:	0.08	0.31	0.31	0.01	0.57	0.57	0.57	0.29	0.99	0.22	0.57	0.57
Delay/Veh:	15.9	2.2	2.2	19.6	25.5	25.5	49.2	35.7	84.9	43.5	45.9	45.9
User DelAdj:	1.00	1.00	1.00	1.00	1.00	1.00	1.00	1.00	1.00	1.00	1.00	1.00
AdjDel/Veh:	15.9	2.2	2.2	19.6	25.5	25.5	49.2	35.7	84.9	43.5	45.9	45.9
LOS by Move:	B	A	A	B	C	C	D	D	F	D	D	D
HCM2kAvgQ:	1	4	4	0	10	10	4	2	14	1	4	4

Note: Queue reported is the number of cars per lane.

City of Murrieta General Plan
Future Proposed General Plan
PM Peak Hour

Level Of Service Computation Report
2000 HCM Operations Method (Future Volume Alternative)

Intersection #108 Winchester Road - SR-79 & Keller Road

Cycle (sec): 100 | Critical Vol./Cap.(X): 0.547
Loss Time (sec): 0 (Y+R=4.0 sec) | Average Delay (sec/veh): 1.6
Optimal Cycle: 41 | Level Of Service: A

Street Name:	Winchester Road - SR-79						Keller Road					
Approach:	North Bound			South Bound			East Bound			West Bound		
Movement:	L -	T -	R	L -	T -	R	L -	T -	R	L -	T -	R
Control:	Protected			Protected			Permitted			Permitted		
Rights:	Include			Include			Include			Include		
Min. Green:	0	0	0	0	0	0	0	0	0	0	0	0
Lanes:	1 0	2 1	0	1 0	2 1	0	1 0	1 1	0	1 0	1 1	0
Volume Module:												
Base Vol:	1	2693	28	9	2103	1	2	59	2	10	16	25
Growth Adj:	1.00	1.00	1.00	1.00	1.00	1.00	1.00	1.00	1.00	1.00	1.00	1.00
Initial Bse:	1	2693	28	9	2103	1	2	59	2	10	16	25
Added Vol:	0	0	0	0	0	0	0	0	0	0	0	0
PasserByVol:	0	0	0	0	0	0	0	0	0	0	0	0
Initial Fut:	1	2693	28	9	2103	1	2	59	2	10	16	25
User Adj:	1.00	1.00	1.00	1.00	1.00	1.00	1.00	1.00	1.00	1.00	1.00	1.00
PHF Adj:	1.00	1.00	1.00	1.00	1.00	1.00	1.00	1.00	1.00	1.00	1.00	1.00
PHF Volume:	1	2693	28	9	2103	1	2	59	2	10	16	25
Reduct Vol:	0	0	0	0	0	0	0	0	0	0	0	0
Reduced Vol:	1	2693	28	9	2103	1	2	59	2	10	16	25
PCE Adj:	1.00	1.00	1.00	1.00	1.00	1.00	1.00	1.00	1.00	1.00	1.00	1.00
MLF Adj:	1.00	1.00	1.00	1.00	1.00	1.00	1.00	1.00	1.00	1.00	1.00	1.00
FinalVolume:	1	2693	28	9	2103	1	2	59	2	10	16	25
Saturation Flow Module:												
Sat/Lane:	1900	1900	1900	1900	1900	1900	1900	1900	1900	1900	1900	1900
Adjustment:	0.95	0.91	0.91	0.95	0.91	0.91	1.00	0.95	0.95	1.00	0.86	0.86
Lanes:	1.00	2.97	0.03	1.00	2.99	0.01	1.00	1.93	0.07	1.00	1.00	1.00
Final Sat.:	1805	5128	53	1805	5185	2	1900	3474	118	1900	1641	1641
Capacity Analysis Module:												
Vol/Sat:	0.00	0.53	0.53	0.00	0.41	0.41	0.00	0.02	0.02	0.01	0.01	0.02
Crit Moves:		****		****				****				
Green/Cycle:	0.00	0.96	0.96	0.01	0.97	0.97	0.03	0.03	0.03	0.03	0.03	0.03
Volume/Cap:	0.42	0.55	0.55	0.55	0.42	0.42	0.03	0.55	0.55	0.14	0.31	0.49
Delay/Veh:	139.2	0.3	0.3	82.9	0.1	0.1	47.1	53.4	53.4	48.0	48.8	52.2
User DelAdj:	1.00	1.00	1.00	1.00	1.00	1.00	1.00	1.00	1.00	1.00	1.00	1.00
AdjDel/Veh:	139.2	0.3	0.3	82.9	0.1	0.1	47.1	53.4	53.4	48.0	48.8	52.2
LOS by Move:	F	A	A	F	A	A	D	D	D	D	D	D
HCM2kAvgQ:	0	4	4	1	2	2	0	2	2	0	1	2

Note: Queue reported is the number of cars per lane.

City of Murrieta General Plan
Future Proposed General Plan
PM Peak Hour

Level Of Service Computation Report
2000 HCM Operations Method (Future Volume Alternative)

Intersection #112 Leon Road & Jean Nicholas

Cycle (sec): 100 | Critical Vol./Cap.(X): 0.694
Loss Time (sec): 0 (Y+R=4.0 sec) | Average Delay (sec/veh): 26.4
Optimal Cycle: 74 | Level Of Service: C

Street Name:	Leon Road						Jean Nicholas					
Approach:	North Bound			South Bound			East Bound			West Bound		
Movement:	L -	T -	R	L -	T -	R	L -	T -	R	L -	T -	R
Control:	Protected			Protected			Protected			Protected		
Rights:	Include			Include			Include			Include		
Min. Green:	0	0	0	0	0	0	0	0	0	0	0	0
Lanes:	1 0	1 1	0	1 0	1 1	0	1 0	1 1	0	1 0	1 1	0
Volume Module:												
Base Vol:	2	530	263	327	553	11	2	128	12	114	123	446
Growth Adj:	1.00	1.00	1.00	1.00	1.00	1.00	1.00	1.00	1.00	1.00	1.00	1.00
Initial Bse:	2	530	263	327	553	11	2	128	12	114	123	446
Added Vol:	0	0	0	0	0	0	0	0	0	0	0	0
PasserByVol:	0	0	0	0	0	0	0	0	0	0	0	0
Initial Fut:	2	530	263	327	553	11	2	128	12	114	123	446
User Adj:	1.00	1.00	1.00	1.00	1.00	1.00	1.00	1.00	1.00	1.00	1.00	1.00
PHF Adj:	1.00	1.00	1.00	1.00	1.00	1.00	1.00	1.00	1.00	1.00	1.00	1.00
PHF Volume:	2	530	263	327	553	11	2	128	12	114	123	446
Reduct Vol:	0	0	0	0	0	0	0	0	0	0	0	0
Reduced Vol:	2	530	263	327	553	11	2	128	12	114	123	446
PCE Adj:	1.00	1.00	1.00	1.00	1.00	1.00	1.00	1.00	1.00	1.00	1.00	1.00
MLF Adj:	1.00	1.00	1.00	1.00	1.00	1.00	1.00	1.00	1.00	1.00	1.00	1.00
FinalVolume:	2	530	263	327	553	11	2	128	12	114	123	446
Saturation Flow Module:												
Sat/Lane:	1900	1900	1900	1900	1900	1900	1900	1900	1900	1900	1900	1900
Adjustment:	0.95	0.90	0.90	0.95	0.95	0.95	0.95	0.94	0.94	0.95	0.84	0.84
Lanes:	1.00	1.34	0.66	1.00	1.96	0.04	1.00	1.83	0.17	1.00	1.00	1.00
Final Sat.:	1805	2292	1137	1805	3529	70	1805	3258	305	1805	1592	1592
Capacity Analysis Module:												
Vol/Sat:	0.00	0.23	0.23	0.18	0.16	0.16	0.00	0.04	0.04	0.06	0.08	0.28
Crit Moves:		****		****			****					****
Green/Cycle:	0.00	0.33	0.33	0.26	0.59	0.59	0.00	0.16	0.16	0.25	0.40	0.40
Volume/Cap:	0.27	0.69	0.69	0.69	0.27	0.27	0.69	0.25	0.25	0.25	0.19	0.69
Delay/Veh:	67.6	30.8	30.8	37.8	10.0	10.0	309.6	37.4	37.4	30.3	19.3	27.3
User DelAdj:	1.00	1.00	1.00	1.00	1.00	1.00	1.00	1.00	1.00	1.00	1.00	1.00
AdjDel/Veh:	67.6	30.8	30.8	37.8	10.0	10.0	309.6	37.4	37.4	30.3	19.3	27.3
LOS by Move:	E	C	C	D	B	B	F	D	D	C	B	C
HCM2kAvgQ:	0	12	12	10	4	4	1	2	2	3	3	13

Note: Queue reported is the number of cars per lane.

City of Murrieta General Plan
Future Proposed General Plan
PM Peak Hour

Level Of Service Computation Report
2000 HCM Operations Method (Future Volume Alternative)

Intersection #122 Meadowlark Lane - Whitewood Road & Clinton Keith Road

Cycle (sec): 100 | Critical Vol./Cap.(X): 1.400
Loss Time (sec): 0 (Y+R=4.0 sec) | Average Delay (sec/veh): 121.7
Optimal Cycle: 180 | Level Of Service: F

Street Name:	Meadowlark Lane - Whitewood Road						Clinton Keith Road					
Approach:	North Bound			South Bound			East Bound			West Bound		
Movement:	L	T	R	L	T	R	L	T	R	L	T	R
Control:	Protected			Protected			Protected			Protected		
Rights:	Include			Include			Include			Include		
Min. Green:	0	0	0	0	0	0	0	0	0	0	0	0
Lanes:	2 0	2 0	1	2 0	1 1	0	2 0	3 0	1	2 0	3 0	1
Volume Module:												
Base Vol:	748	337	589	767	412	730	352	1452	506	314	701	1031
Growth Adj:	1.00	1.00	1.00	1.00	1.00	1.00	1.00	1.00	1.00	1.00	1.00	1.00
Initial Bse:	748	337	589	767	412	730	352	1452	506	314	701	1031
Added Vol:	0	0	0	0	0	0	0	0	0	0	0	0
PasserByVol:	0	0	0	0	0	0	0	0	0	0	0	0
Initial Fut:	748	337	589	767	412	730	352	1452	506	314	701	1031
User Adj:	1.00	1.00	1.00	1.00	1.00	1.00	1.00	1.00	1.00	1.00	1.00	1.00
PHF Adj:	1.00	1.00	1.00	1.00	1.00	1.00	1.00	1.00	1.00	1.00	1.00	1.00
PHF Volume:	748	337	589	767	412	730	352	1452	506	314	701	1031
Reduct Vol:	0	0	0	0	0	0	0	0	0	0	0	0
Reduced Vol:	748	337	589	767	412	730	352	1452	506	314	701	1031
PCE Adj:	1.00	1.00	1.00	1.00	1.00	1.00	1.00	1.00	1.00	1.00	1.00	1.00
MLF Adj:	1.00	1.00	1.00	1.00	1.00	1.00	1.00	1.00	1.00	1.00	1.00	1.00
FinalVolume:	748	337	589	767	412	730	352	1452	506	314	701	1031
Saturation Flow Module:												
Sat/Lane:	1900	1900	1900	1900	1900	1900	1900	1900	1900	1900	1900	1900
Adjustment:	0.92	0.95	0.85	0.92	0.86	0.86	0.92	0.91	0.85	0.92	0.91	0.85
Lanes:	2.00	2.00	1.00	2.00	1.00	1.00	2.00	3.00	1.00	2.00	3.00	1.00
Final Sat.:	3502	3610	1615	3502	1632	1632	3502	5187	1615	3502	5187	1615
Capacity Analysis Module:												
Vol/Sat:	0.21	0.09	0.36	0.22	0.25	0.45	0.10	0.28	0.31	0.09	0.14	0.64
Crit Moves:	****					****	****					****
Green/Cycle:	0.15	0.29	0.29	0.18	0.32	0.32	0.07	0.41	0.41	0.12	0.46	0.46
Volume/Cap:	1.40	0.32	1.24	1.24	0.79	1.40	1.40	0.68	0.76	0.76	0.30	1.40
Delay/Veh:	233.4	27.6	158.6	160.9	34.0	221.4	248.7	25.1	30.6	51.0	17.2	215.3
User DelAdj:	1.00	1.00	1.00	1.00	1.00	1.00	1.00	1.00	1.00	1.00	1.00	1.00
AdjDel/Veh:	233.4	27.6	158.6	160.9	34.0	221.4	248.7	25.1	30.6	51.0	17.2	215.3
LOS by Move:	F	C	F	F	C	F	F	C	C	D	B	F
HCM2kAvgQ:	27	4	34	24	14	52	14	14	15	7	5	69

Note: Queue reported is the number of cars per lane.

City of Murrieta General Plan
Future Proposed General Plan
PM Peak Hour

Level Of Service Computation Report
2000 HCM Operations Method (Future Volume Alternative)

Intersection #138 Jefferson Avenue & Cherry Street

Cycle (sec): 100 | Critical Vol./Cap.(X): 1.033
Loss Time (sec): 0 (Y+R=4.0 sec) | Average Delay (sec/veh): 37.8
Optimal Cycle: 180 | Level Of Service: D

Street Name:	Jefferson Avenue						Cherry Street					
Approach:	North Bound			South Bound			East Bound			West Bound		
Movement:	L	T	R	L	T	R	L	T	R	L	T	R
Control:	Protected			Protected			Protected			Protected		
Rights:	Include			Include			Include			Include		
Min. Green:	0	0	0	0	0	0	0	0	0	0	0	0
Lanes:	1 0	2 0	1	1 0	1 1	0	1 0	2 1	0	1 0	2 1	0
Volume Module:												
Base Vol:	29	1226	823	196	861	6	2	1060	40	122	793	666
Growth Adj:	1.00	1.00	1.00	1.00	1.00	1.00	1.00	1.00	1.00	1.00	1.00	1.00
Initial Bse:	29	1226	823	196	861	6	2	1060	40	122	793	666
Added Vol:	0	0	0	0	0	0	0	0	0	0	0	0
PasserByVol:	0	0	0	0	0	0	0	0	0	0	0	0
Initial Fut:	29	1226	823	196	861	6	2	1060	40	122	793	666
User Adj:	1.00	1.00	1.00	1.00	1.00	1.00	1.00	1.00	1.00	1.00	1.00	1.00
PHF Adj:	1.00	1.00	1.00	1.00	1.00	1.00	1.00	1.00	1.00	1.00	1.00	1.00
PHF Volume:	29	1226	823	196	861	6	2	1060	40	122	793	666
Reduct Vol:	0	0	0	0	0	0	0	0	0	0	0	0
Reduced Vol:	29	1226	823	196	861	6	2	1060	40	122	793	666
PCE Adj:	1.00	1.00	1.00	1.00	1.00	1.00	1.00	1.00	1.00	1.00	1.00	1.00
MLF Adj:	1.00	1.00	1.00	1.00	1.00	1.00	1.00	1.00	1.00	1.00	1.00	1.00
FinalVolume:	29	1226	823	196	861	6	2	1060	40	122	793	666
Saturation Flow Module:												
Sat/Lane:	1900	1900	1900	1900	1900	1900	1900	1900	1900	1900	1900	1900
Adjustment:	0.95	0.95	0.85	0.95	0.95	0.95	0.95	0.91	0.91	0.95	0.85	0.85
Lanes:	1.00	2.00	1.00	1.00	1.99	0.01	1.00	2.89	0.11	1.00	2.00	1.00
Final Sat.:	1805	3610	1615	1805	3581	25	1805	4973	188	1805	3223	1611
Capacity Analysis Module:												
Vol/Sat:	0.02	0.34	0.51	0.11	0.24	0.24	0.00	0.21	0.21	0.07	0.25	0.41
Crit Moves:			****	****			****					****
Green/Cycle:	0.04	0.49	0.49	0.11	0.56	0.56	0.00	0.30	0.30	0.10	0.40	0.40
Volume/Cap:	0.43	0.69	1.03	1.03	0.43	0.43	1.03	0.70	0.70	0.70	0.61	1.03
Delay/Veh:	51.4	20.6	65.9	118.9	12.8	12.8	714.5	32.1	32.1	55.7	24.3	62.7
User DelAdj:	1.00	1.00	1.00	1.00	1.00	1.00	1.00	1.00	1.00	1.00	1.00	1.00
AdjDel/Veh:	51.4	20.6	65.9	118.9	12.8	12.8	714.5	32.1	32.1	55.7	24.3	62.7
LOS by Move:	D	C	E	F	B	B	F	C	C	E	C	E
HCM2kAvgQ:	1	16	35	11	8	8	1	12	12	5	11	31

Note: Queue reported is the number of cars per lane.

City of Murrieta General Plan
Future Proposed General Plan
PM Peak Hour

Level Of Service Computation Report
2000 HCM Operations Method (Future Volume Alternative)

Intersection #141 Jefferson Ave & Nutmeg St

Cycle (sec): 100 Critical Vol./Cap.(X): 0.909
Loss Time (sec): 0 (Y+R=4.0 sec) Average Delay (sec/veh): 36.0
Optimal Cycle: 180 Level Of Service: D

Street Name:	Jefferson Ave						Nutmeg St					
Approach:	North Bound			South Bound			East Bound			West Bound		
Movement:	L	T	R	L	T	R	L	T	R	L	T	R
Control:	Protected			Protected			Protected			Protected		
Rights:	Include			Include			Include			Include		
Min. Green:	0	0	0	0	0	0	0	0	0	0	0	0
Lanes:	1 0	2 1	0	1 0	2 1	0	1 0	1 1	0	1 0	1 1	0
Volume Module:												
Base Vol:	624	1208	377	103	1155	97	61	133	249	300	223	145
Growth Adj:	1.00	1.00	1.00	1.00	1.00	1.00	1.00	1.00	1.00	1.00	1.00	1.00
Initial Bse:	624	1208	377	103	1155	97	61	133	249	300	223	145
Added Vol:	0	0	0	0	0	0	0	0	0	0	0	0
PasserByVol:	0	0	0	0	0	0	0	0	0	0	0	0
Initial Fut:	624	1208	377	103	1155	97	61	133	249	300	223	145
User Adj:	1.00	1.00	1.00	1.00	1.00	1.00	1.00	1.00	1.00	1.00	1.00	1.00
PHF Adj:	1.00	1.00	1.00	1.00	1.00	1.00	1.00	1.00	1.00	1.00	1.00	1.00
PHF Volume:	624	1208	377	103	1155	97	61	133	249	300	223	145
Reduct Vol:	0	0	0	0	0	0	0	0	0	0	0	0
Reduced Vol:	624	1208	377	103	1155	97	61	133	249	300	223	145
PCE Adj:	1.00	1.00	1.00	1.00	1.00	1.00	1.00	1.00	1.00	1.00	1.00	1.00
MLF Adj:	1.00	1.00	1.00	1.00	1.00	1.00	1.00	1.00	1.00	1.00	1.00	1.00
FinalVolume:	624	1208	377	103	1155	97	61	133	249	300	223	145
Saturation Flow Module:												
Sat/Lane:	1900	1900	1900	1900	1900	1900	1900	1900	1900	1900	1900	1900
Adjustment:	0.95	0.88	0.88	0.95	0.90	0.90	0.95	0.86	0.86	0.95	0.89	0.89
Lanes:	1.00	2.29	0.71	1.00	2.77	0.23	1.00	1.00	1.00	1.00	1.21	0.79
Final Sat.:	1805	3811	1189	1805	4728	397	1805	1628	1628	1805	2059	1338
Capacity Analysis Module:												
Vol/Sat:	0.35	0.32	0.32	0.06	0.24	0.24	0.03	0.08	0.15	0.17	0.11	0.11
Crit Moves:	****				****				****	****		
Green/Cycle:	0.38	0.55	0.55	0.10	0.27	0.27	0.08	0.17	0.17	0.18	0.27	0.27
Volume/Cap:	0.91	0.58	0.58	0.58	0.91	0.91	0.40	0.49	0.91	0.91	0.40	0.40
Delay/Veh:	45.4	15.1	15.1	47.6	44.5	44.5	45.2	38.1	64.2	67.8	30.4	30.4
User DelAdj:	1.00	1.00	1.00	1.00	1.00	1.00	1.00	1.00	1.00	1.00	1.00	1.00
AdjDel/Veh:	45.4	15.1	15.1	47.6	44.5	44.5	45.2	38.1	64.2	67.8	30.4	30.4
LOS by Move:	D	B	B	D	D	D	D	D	E	E	C	C
HCM2kAvgQ:	22	12	12	4	18	18	2	4	11	13	5	5

Note: Queue reported is the number of cars per lane.

City of Murrieta General Plan
Future Proposed General Plan
PM Peak Hour

Level Of Service Computation Report
2000 HCM Operations Method (Future Volume Alternative)

Intersection #142 Jefferson Ave & Magnolia St

Cycle (sec): 100 Critical Vol./Cap.(X): 0.503
Loss Time (sec): 0 (Y+R=4.0 sec) Average Delay (sec/veh): 9.4
Optimal Cycle: 46 Level Of Service: A

Street Name:	Jefferson Ave						Magnolia St					
Approach:	North Bound			South Bound			East Bound			West Bound		
Movement:	L	T	R	L	T	R	L	T	R	L	T	R
Control:	Protected			Protected			Protected			Protected		
Rights:	Include			Include			Include			Include		
Min. Green:	0	0	0	0	0	0	0	0	0	0	0	0
Lanes:	1 0	2 1	0	1 0	2 1	0	1 0	0 1	0	1 0	0 1	0
Volume Module:												
Base Vol:	137	2070	11	10	1578	106	159	5	56	7	5	14
Growth Adj:	1.00	1.00	1.00	1.00	1.00	1.00	1.00	1.00	1.00	1.00	1.00	1.00
Initial Bse:	137	2070	11	10	1578	106	159	5	56	7	5	14
Added Vol:	0	0	0	0	0	0	0	0	0	0	0	0
PasserByVol:	0	0	0	0	0	0	0	0	0	0	0	0
Initial Fut:	137	2070	11	10	1578	106	159	5	56	7	5	14
User Adj:	1.00	1.00	1.00	1.00	1.00	1.00	1.00	1.00	1.00	1.00	1.00	1.00
PHF Adj:	1.00	1.00	1.00	1.00	1.00	1.00	1.00	1.00	1.00	1.00	1.00	1.00
PHF Volume:	137	2070	11	10	1578	106	159	5	56	7	5	14
Reduct Vol:	0	0	0	0	0	0	0	0	0	0	0	0
Reduced Vol:	137	2070	11	10	1578	106	159	5	56	7	5	14
PCE Adj:	1.00	1.00	1.00	1.00	1.00	1.00	1.00	1.00	1.00	1.00	1.00	1.00
MLF Adj:	1.00	1.00	1.00	1.00	1.00	1.00	1.00	1.00	1.00	1.00	1.00	1.00
FinalVolume:	137	2070	11	10	1578	106	159	5	56	7	5	14
Saturation Flow Module:												
Sat/Lane:	1900	1900	1900	1900	1900	1900	1900	1900	1900	1900	1900	1900
Adjustment:	0.95	0.91	0.91	0.95	0.90	0.90	0.95	0.86	0.86	0.95	0.89	0.89
Lanes:	1.00	2.98	0.02	1.00	2.81	0.19	1.00	0.08	0.92	1.00	0.26	0.74
Final Sat.:	1805	5154	27	1805	4817	324	1805	134	1504	1805	445	1245
Capacity Analysis Module:												
Vol/Sat:	0.08	0.40	0.40	0.01	0.33	0.33	0.09	0.04	0.04	0.00	0.01	0.01
Crit Moves:	****				****		****				****	
Green/Cycle:	0.15	0.79	0.79	0.01	0.65	0.65	0.18	0.18	0.18	0.02	0.02	0.02
Volume/Cap:	0.50	0.51	0.51	0.51	0.50	0.50	0.50	0.21	0.21	0.21	0.50	0.50
Delay/Veh:	40.5	3.7	3.7	69.2	9.2	9.2	38.6	35.4	35.4	51.4	58.7	58.7
User DelAdj:	1.00	1.00	1.00	1.00	1.00	1.00	1.00	1.00	1.00	1.00	1.00	1.00
AdjDel/Veh:	40.5	3.7	3.7	69.2	9.2	9.2	38.6	35.4	35.4	51.4	58.7	58.7
LOS by Move:	D	A	A	E	A	A	D	D	D	D	E	E
HCM2kAvgQ:	4	8	8	1	10	10	5	2	2	0	1	1

Note: Queue reported is the number of cars per lane.

City of Murrieta General Plan
Future Proposed General Plan
PM Peak Hour

Level Of Service Computation Report
2000 HCM Operations Method (Future Volume Alternative)

Intersection #149 Monroe Ave & Murrieta Hot Springs Rd

Cycle (sec): 100 | Critical Vol./Cap.(X): 0.555
Loss Time (sec): 0 (Y+R=4.0 sec) | Average Delay (sec/veh): 16.2
Optimal Cycle: 51 | Level Of Service: B

Street Name:	Monroe Ave						Murrieta Hot Springs Rd					
Approach:	North Bound			South Bound			East Bound			West Bound		
Movement:	L	T	R	L	T	R	L	T	R	L	T	R
Control:	Protected			Protected			Protected			Protected		
Rights:	Include			Ovl			Ovl			Include		
Min. Green:	0	0	0	0	0	0	0	0	0	0	0	0
Lanes:	1 0	2 0	1	1 0	2 0	1	1 0	4 0	1	1 0	3 1	0
Volume Module:												
Base Vol:	178	236	199	1	239	110	164	2579	154	37	2043	26
Growth Adj:	1.00	1.00	1.00	1.00	1.00	1.00	1.00	1.00	1.00	1.00	1.00	1.00
Initial Bse:	178	236	199	1	239	110	164	2579	154	37	2043	26
Added Vol:	0	0	0	0	0	0	0	0	0	0	0	0
PasserByVol:	0	0	0	0	0	0	0	0	0	0	0	0
Initial Fut:	178	236	199	1	239	110	164	2579	154	37	2043	26
User Adj:	1.00	1.00	1.00	1.00	1.00	1.00	1.00	1.00	1.00	1.00	1.00	1.00
PHF Adj:	1.00	1.00	1.00	1.00	1.00	1.00	1.00	1.00	1.00	1.00	1.00	1.00
PHF Volume:	178	236	199	1	239	110	164	2579	154	37	2043	26
Reduct Vol:	0	0	0	0	0	0	0	0	0	0	0	0
Reduced Vol:	178	236	199	1	239	110	164	2579	154	37	2043	26
PCE Adj:	1.00	1.00	1.00	1.00	1.00	1.00	1.00	1.00	1.00	1.00	1.00	1.00
MLF Adj:	1.00	1.00	1.00	1.00	1.00	1.00	1.00	1.00	1.00	1.00	1.00	1.00
FinalVolume:	178	236	199	1	239	110	164	2579	154	37	2043	26
Saturation Flow Module:												
Sat/Lane:	1900	1900	1900	1900	1900	1900	1900	1900	1900	1900	1900	1900
Adjustment:	0.95	0.95	0.85	0.95	0.95	0.85	0.95	0.91	0.85	0.95	0.91	0.91
Lanes:	1.00	2.00	1.00	1.00	2.00	1.00	1.00	4.00	1.00	1.00	3.95	0.05
Final Sat.:	1805	3610	1615	1805	3610	1615	1805	6916	1615	1805	6815	87
Capacity Analysis Module:												
Vol/Sat:	0.10	0.07	0.12	0.00	0.07	0.07	0.09	0.37	0.10	0.02	0.30	0.30
Crit Moves:	****				****		****				****	
Green/Cycle:	0.18	0.30	0.30	0.00	0.12	0.28	0.16	0.67	0.84	0.04	0.54	0.54
Volume/Cap:	0.56	0.22	0.42	0.42	0.56	0.24	0.56	0.56	0.11	0.56	0.56	0.56
Delay/Veh:	39.7	26.7	28.9	138.3	43.1	27.9	40.8	9.0	1.4	57.7	15.3	15.3
User DelAdj:	1.00	1.00	1.00	1.00	1.00	1.00	1.00	1.00	1.00	1.00	1.00	1.00
AdjDel/Veh:	39.7	26.7	28.9	138.3	43.1	27.9	40.8	9.0	1.4	57.7	15.3	15.3
LOS by Move:	D	C	C	F	D	C	D	A	A	E	B	B
HCM2kAvgQ:	6	3	5	0	4	3	5	12	1	2	12	12

Note: Queue reported is the number of cars per lane.

City of Murrieta General Plan
Future Proposed General Plan
PM Peak Hour

Level Of Service Computation Report
2000 HCM Operations Method (Future Volume Alternative)

Intersection #158 Adams Ave & Guava St

Cycle (sec): 100 | Critical Vol./Cap.(X): 0.368
Loss Time (sec): 0 (Y+R=4.0 sec) | Average Delay (sec/veh): 14.3
Optimal Cycle: 23 | Level Of Service: B

Street Name:	Adams Ave						Guava St					
Approach:	North Bound			South Bound			East Bound			West Bound		
Movement:	L	T	R	L	T	R	L	T	R	L	T	R
Control:	Permitted			Permitted			Permitted			Permitted		
Rights:	Include			Include			Include			Include		
Min. Green:	0	0	0	0	0	0	0	0	0	0	0	0
Lanes:	1 0	1 1	0	1 0	1 1	0	1 0	0 1	0	1 0	0 1	0
Volume Module:												
Base Vol:	37	222	27	91	39	205	59	243	181	8	261	165
Growth Adj:	1.00	1.00	1.00	1.00	1.00	1.00	1.00	1.00	1.00	1.00	1.00	1.00
Initial Bse:	37	222	27	91	39	205	59	243	181	8	261	165
Added Vol:	0	0	0	0	0	0	0	0	0	0	0	0
PasserByVol:	0	0	0	0	0	0	0	0	0	0	0	0
Initial Fut:	37	222	27	91	39	205	59	243	181	8	261	165
User Adj:	1.00	1.00	1.00	1.00	1.00	1.00	1.00	1.00	1.00	1.00	1.00	1.00
PHF Adj:	1.00	1.00	1.00	1.00	1.00	1.00	1.00	1.00	1.00	1.00	1.00	1.00
PHF Volume:	37	222	27	91	39	205	59	243	181	8	261	165
Reduct Vol:	0	0	0	0	0	0	0	0	0	0	0	0
Reduced Vol:	37	222	27	91	39	205	59	243	181	8	261	165
PCE Adj:	1.00	1.00	1.00	1.00	1.00	1.00	1.00	1.00	1.00	1.00	1.00	1.00
MLF Adj:	1.00	1.00	1.00	1.00	1.00	1.00	1.00	1.00	1.00	1.00	1.00	1.00
FinalVolume:	37	222	27	91	39	205	59	243	181	8	261	165
Saturation Flow Module:												
Sat/Lane:	1900	1900	1900	1900	1900	1900	1900	1900	1900	1900	1900	1900
Adjustment:	0.51	0.93	0.93	0.51	0.83	0.83	0.43	0.94	0.94	0.43	0.94	0.94
Lanes:	1.00	1.78	0.22	1.00	1.00	1.00	1.00	0.57	0.43	1.00	0.61	0.39
Final Sat.:	969	3167	385	961	1578	1578	809	1019	759	811	1097	693
Capacity Analysis Module:												
Vol/Sat:	0.04	0.07	0.07	0.09	0.02	0.13	0.07	0.24	0.24	0.01	0.24	0.24
Crit Moves:						****		****				
Green/Cycle:	0.35	0.35	0.35	0.35	0.35	0.35	0.65	0.65	0.65	0.65	0.65	0.65
Volume/Cap:	0.11	0.20	0.20	0.27	0.07	0.37	0.11	0.37	0.37	0.02	0.37	0.37
Delay/Veh:	21.9	22.6	22.6	23.6	21.5	24.4	6.8	8.4	8.4	6.3	8.4	8.4
User DelAdj:	1.00	1.00	1.00	1.00	1.00	1.00	1.00	1.00	1.00	1.00	1.00	1.00
AdjDel/Veh:	21.9	22.6	22.6	23.6	21.5	24.4	6.8	8.4	8.4	6.3	8.4	8.4
LOS by Move:	C	C	C	C	C	C	A	A	A	A	A	A
HCM2kAvgQ:	1	3	3	2	1	5	1	6	6	0	6	6

Note: Queue reported is the number of cars per lane.

SCENARIO B

City of Murrieta General Plan
Future General Plan (Scenario B)
AM Peak Hour

Scenario Report

Scenario:	Future GP Scenario B AM
Command:	Future GP Scenario B AM
Volume:	Future GP Scenario B AM
Geometry:	Future
Impact Fee:	Default Impact Fee
Trip Generation:	Default Trip Generation
Trip Distribution:	Default Trip Distribution
Paths:	Default Path
Routes:	Default Route
Configuration:	Future GP Scenario B AM

City of Murrieta General Plan
Future General Plan (Scenario B)
AM Peak Hour

Turning Movement Report

Volume	Northbound			Southbound			Eastbound			Westbound			Total
Type	Left	Thru	Right	Left	Thru	Right	Left	Thru	Right	Left	Thru	Right	Volume
#1 Menifee Road & Scott Road													
Base	256	394	414	250	735	89	111	557	303	799	488	262	4658
Added	0	0	0	0	0	0	0	0	0	0	0	0	0
Total	256	394	414	250	735	89	111	557	303	799	488	262	4658
#2 Leon Road & Scott Road													
Base	0	0	0	0	0	0	0	0	0	0	0	0	0
Added	0	0	0	0	0	0	0	0	0	0	0	0	0
Total	0	0	0	0	0	0	0	0	0	0	0	0	0
#3 Winchester Road/SR-79 & Scott Road													
Base	114	1419	52	946	2576	75	115	175	65	16	153	971	6677
Added	0	0	0	0	0	0	0	0	0	0	0	0	0
Total	114	1419	52	946	2576	75	115	175	65	16	153	971	6677
#4 Antelope Road & Keller Road													
Base	0	0	0	0	0	0	0	0	0	0	0	0	0
Added	0	0	0	0	0	0	0	0	0	0	0	0	0
Total	0	0	0	0	0	0	0	0	0	0	0	0	0
#5 Menifee Road - Meadowlark Road & Keller Road													
Base	0	0	0	0	0	0	0	0	0	0	0	0	0
Added	0	0	0	0	0	0	0	0	0	0	0	0	0
Total	0	0	0	0	0	0	0	0	0	0	0	0	0
#6 Briggs Road & Keller Road													
Base	304	19	53	0	33	42	2	90	498	13	328	1	1383
Added	0	0	0	0	0	0	0	0	0	0	0	0	0
Total	304	19	53	0	33	42	2	90	498	13	328	1	1383
#7 Leon Road & Keller Road													
Base	0	0	0	0	0	0	0	0	0	0	0	0	0
Added	0	0	0	0	0	0	0	0	0	0	0	0	0
Total	0	0	0	0	0	0	0	0	0	0	0	0	0
#8 Winchester Road - SR-79 & Keller Road													
Base	0	0	0	0	0	0	0	0	0	0	0	0	0
Added	0	0	0	0	0	0	0	0	0	0	0	0	0
Total	0	0	0	0	0	0	0	0	0	0	0	0	0
#9 Antelope Road & Golden City Drive - Baxter Road													
Base	3	178	593	261	881	30	1	51	9	308	209	684	3208
Added	0	0	0	0	0	0	0	0	0	0	0	0	0
Total	3	178	593	261	881	30	1	51	9	308	209	684	3208

City of Murrieta General Plan
Future General Plan (Scenario B)
AM Peak Hour

Volume Type	Northbound Left	Northbound Thru	Northbound Right	Southbound Left	Southbound Thru	Southbound Right	Eastbound Left	Eastbound Thru	Eastbound Right	Westbound Left	Westbound Thru	Westbound Right	Total Volume
#10 Whitewood Roa - /Meadowlark Road & Golden City Drive - Baxter Road													
Base	343	813	2	0	778	798	66	4	677	1	15	2	3499
Added	0	0	0	0	0	0	0	0	0	0	0	0	0
Total	343	813	2	0	778	798	66	4	677	1	15	2	3499
#11 Briggs Road & Baxter Road - Jean Nicholas													
Base	0	182	27	57	505	0	0	0	0	3	0	50	824
Added	0	0	0	0	0	0	0	0	0	0	0	0	0
Total	0	182	27	57	505	0	0	0	0	3	0	50	824
#12 Leon Road & Jean Nicholas													
Base	0	0	0	0	0	0	0	0	0	0	0	0	0
Added	0	0	0	0	0	0	0	0	0	0	0	0	0
Total	0	0	0	0	0	0	0	0	0	0	0	0	0
#13 Winchester Road - SR-79 & Nicholas - Skyview													
Base	136	1408	350	20	2816	29	36	331	139	119	333	174	5891
Added	0	0	0	0	0	0	0	0	0	0	0	0	0
Total	136	1408	350	20	2816	29	36	331	139	119	333	174	5891
#14 Antelope Road & Linnel Lane Extension													
Base	18	731	77	58	525	341	239	504	230	14	177	355	3269
Added	0	0	0	0	0	0	0	0	0	0	0	0	0
Total	18	731	77	58	525	341	239	504	230	14	177	355	3269
#15 Whitewood Road - Meadowlark Road & Linnel Lane Extension													
Base	34	1000	736	271	754	313	36	530	74	24	197	290	4259
Added	0	0	0	0	0	0	0	0	0	0	0	0	0
Total	34	1000	736	271	754	313	36	530	74	24	197	290	4259
#16 Leon Road & Max Gillis Road													
Base	418	119	422	345	302	130	107	477	716	561	293	184	4074
Added	0	0	0	0	0	0	0	0	0	0	0	0	0
Total	418	119	422	345	302	130	107	477	716	561	293	184	4074
#17 Winchester Road - SR-79 & Max Gillis - Thompson													
Base	176	1324	43	136	2163	666	624	155	266	32	287	44	5916
Added	0	0	0	0	0	0	0	0	0	0	0	0	0
Total	176	1324	43	136	2163	666	624	155	266	32	287	44	5916
#18 California Oaks Road & Clinton Keith Road													
Base	184	0	611	0	0	0	0	2451	297	934	1886	0	6363
Added	0	0	0	0	0	0	0	0	0	0	0	0	0
Total	184	0	611	0	0	0	0	2451	297	934	1886	0	6363

City of Murrieta General Plan
Future General Plan (Scenario B)
AM Peak Hour

Volume Type	Northbound Left	Northbound Thru	Northbound Right	Southbound Left	Southbound Thru	Southbound Right	Eastbound Left	Eastbound Thru	Eastbound Right	Westbound Left	Westbound Thru	Westbound Right	Total Volume
#19 I-215 SB Off-Ramp & Clinton Keith Road													
Base	0	0	0	54	0	424	0	2554	631	0	1998	240	5901
Added	0	0	0	0	0	0	0	0	0	0	0	0	0
Total	0	0	0	54	0	424	0	2554	631	0	1998	240	5901
#20 I-215 NB Off Ramp & Clinton Keith Road													
Base	127	0	1354	0	0	0	0	1756	300	0	2320	267	6124
Added	0	0	0	0	0	0	0	0	0	0	0	0	0
Total	127	0	1354	0	0	0	0	1756	300	0	2320	267	6124
#21 Antelope Road & Clinton Keith Road													
Base	0	0	0	17	0	550	402	1797	0	0	1587	274	4627
Added	0	0	0	0	0	0	0	0	0	0	0	0	0
Total	0	0	0	17	0	550	402	1797	0	0	1587	274	4627
#22 Meadowlark Lane - Whitewood Road & Clinton Keith Road													
Base	0	0	0	0	0	0	0	0	0	0	0	0	0
Added	0	0	0	0	0	0	0	0	0	0	0	0	0
Total	0	0	0	0	0	0	0	0	0	0	0	0	0
#23 Liberty Road & Clinton Keith Road													
Base	12	0	59	0	0	0	0	1960	151	34	2224	0	4440
Added	0	0	0	0	0	0	0	0	0	0	0	0	0
Total	12	0	59	0	0	0	0	1960	151	34	2224	0	4440
#24 Leon Road & Clinton Keith Road													
Base	0	0	0	162	0	1329	415	1595	0	0	727	578	4806
Added	0	0	0	0	0	0	0	0	0	0	0	0	0
Total	0	0	0	162	0	1329	415	1595	0	0	727	578	4806
#25 Winchester Road - SR-79 & Benton Road													
Base	458	1368	362	95	2018	376	44	533	1108	338	572	32	7304
Added	0	0	0	0	0	0	0	0	0	0	0	0	0
Total	458	1368	362	95	2018	376	44	533	1108	338	572	32	7304
#26 Winchester Road - SR-79 & Via Mira Mosa													
Base	27	1638	783	317	2745	234	362	47	91	176	19	31	6470
Added	0	0	0	0	0	0	0	0	0	0	0	0	0
Total	27	1638	783	317	2745	234	362	47	91	176	19	31	6470
#27 Monroe Ave & Los Alamos													
Base	29	223	187	562	483	213	45	337	132	64	1008	465	3748
Added	0	0	0	0	0	0	0	0	0	0	0	0	0
Total	29	223	187	562	483	213	45	337	132	64	1008	465	3748

City of Murrieta General Plan
Future General Plan (Scenario B)
AM Peak Hour

Volume Type	Northbound Left	Thru	Right	Southbound Left	Thru	Right	Eastbound Left	Thru	Right	Westbound Left	Thru	Right	Total Volume
#28 Jefferson Avenue & Murrieta Hot Springs Road													
Base	11	1065	524	914	1272	81	14	77	22	852	92	812	5736
Added	0	0	0	0	0	0	0	0	0	0	0	0	0
Total	11	1065	524	914	1272	81	14	77	22	852	92	812	5736
#29 Madison Avenue & Murrieta Hot Springs Road													
Base	151	73	355	188	216	174	118	1155	314	789	1764	67	5364
Added	0	0	0	0	0	0	0	0	0	0	0	0	0
Total	151	73	355	188	216	174	118	1155	314	789	1764	67	5364
#30 I-15 SB Off-Ramp & Murrieta Hot Springs Road													
Base	0	0	0	810	0	413	0	1436	218	0	2353	47	5277
Added	0	0	0	0	0	0	0	0	0	0	0	0	0
Total	0	0	0	810	0	413	0	1436	218	0	2353	47	5277
#31 I-15 NB Off-Ramp & Murrieta Hot Springs Road													
Base	286	0	61	0	0	0	0	2251	200	0	1621	608	5027
Added	0	0	0	0	0	0	0	0	0	0	0	0	0
Total	286	0	61	0	0	0	0	2251	200	0	1621	608	5027
#32 I-215 SB Off-Ramp & Murrieta Hot Springs Road													
Base	0	0	0	476	0	515	0	1880	53	0	2605	378	5907
Added	0	0	0	0	0	0	0	0	0	0	0	0	0
Total	0	0	0	476	0	515	0	1880	53	0	2605	378	5907
#33 I-215 NB Off-Ramp & Murrieta Hot Springs Road													
Base	338	0	24	0	0	0	0	1583	115	0	2633	668	5361
Added	0	0	0	0	0	0	0	0	0	0	0	0	0
Total	338	0	24	0	0	0	0	1583	115	0	2633	668	5361
#34 Jackson Avenue & Murrieta Hot Springs Road													
Base	68	0	52	0	0	0	0	1217	41	163	2045	0	3586
Added	0	0	0	0	0	0	0	0	0	0	0	0	0
Total	68	0	52	0	0	0	0	1217	41	163	2045	0	3586
#35 Margarita Road & Murrieta Hot Springs Road													
Base	628	60	127	41	17	7	162	751	460	304	1795	72	4424
Added	0	0	0	0	0	0	0	0	0	0	0	0	0
Total	628	60	127	41	17	7	162	751	460	304	1795	72	4424
#36 French Valley Parkway & Murrieta Hot Springs Road													
Base	20	0	832	0	0	0	0	1242	291	771	2012	0	5168
Added	0	0	0	0	0	0	0	0	0	0	0	0	0
Total	20	0	832	0	0	0	0	1242	291	771	2012	0	5168

City of Murrieta General Plan
Future General Plan (Scenario B)
AM Peak Hour

Volume Type	Northbound Left	Thru	Right	Southbound Left	Thru	Right	Eastbound Left	Thru	Right	Westbound Left	Thru	Right	Total Volume
#37 Jefferson Avenue & Guava Street													
Base	23	1420	3	8	1468	305	169	115	86	2	32	10	3641
Added	0	0	0	0	0	0	0	0	0	0	0	0	0
Total	23	1420	3	8	1468	305	169	115	86	2	32	10	3641
#38 Jefferson Avenue & Cherry Street													
Base	0	0	0	0	0	0	0	0	0	0	0	0	0
Added	0	0	0	0	0	0	0	0	0	0	0	0	0
Total	0	0	0	0	0	0	0	0	0	0	0	0	0
#39 Washington Ave & Calle Del Oso Oro/Nutmeg													
Base	264	162	123	86	197	89	64	592	675	142	200	40	2634
Added	0	0	0	0	0	0	0	0	0	0	0	0	0
Total	264	162	123	86	197	89	64	592	675	142	200	40	2634
#40 Clinton Keith Rd & Calle de Oso Oro/Bear Creek Dr													
Base	60	107	273	5	114	195	267	618	160	422	615	20	2856
Added	0	0	0	0	0	0	0	0	0	0	0	0	0
Total	60	107	273	5	114	195	267	618	160	422	615	20	2856
#41 Jefferson Ave & Nutmeg St													
Base	0	0	0	0	0	0	0	0	0	0	0	0	0
Added	0	0	0	0	0	0	0	0	0	0	0	0	0
Total	0	0	0	0	0	0	0	0	0	0	0	0	0
#42 Jefferson Ave & Magnolia St													
Base	0	0	0	0	0	0	0	0	0	0	0	0	0
Added	0	0	0	0	0	0	0	0	0	0	0	0	0
Total	0	0	0	0	0	0	0	0	0	0	0	0	0
#43 Jefferson Ave & Lemon St													
Base	282	758	28	4	2549	155	35	3	344	8	12	6	4184
Added	0	0	0	0	0	0	0	0	0	0	0	0	0
Total	282	758	28	4	2549	155	35	3	344	8	12	6	4184
#44 Jefferson Ave & Kalmia St													
Base	258	930	266	954	1732	153	49	496	349	236	341	524	6288
Added	0	0	0	0	0	0	0	0	0	0	0	0	0
Total	258	930	266	954	1732	153	49	496	349	236	341	524	6288
#45 Jefferson Ave & Juniper St													
Base	485	1291	36	69	2046	172	135	100	195	7	100	21	4657
Added	0	0	0	0	0	0	0	0	0	0	0	0	0
Total	485	1291	36	69	2046	172	135	100	195	7	100	21	4657

City of Murrieta General Plan
Future General Plan (Scenario B)
AM Peak Hour

Volume Type	Northbound Left	Thru	Right	Southbound Left	Thru	Right	Eastbound Left	Thru	Right	Westbound Left	Thru	Right	Total Volume
#46 Jefferson Ave & Ivy St/Los Alamos Rd													
Base	166	1321	95	310	1866	52	53	88	129	354	82	421	4937
Added	0	0	0	0	0	0	0	0	0	0	0	0	0
Total	166	1321	95	310	1866	52	53	88	129	354	82	421	4937
#47 Madison Ave & Kalmia St													
Base	0	0	0	0	0	0	0	0	0	0	0	0	0
Added	0	0	0	0	0	0	0	0	0	0	0	0	0
Total	0	0	0	0	0	0	0	0	0	0	0	0	0
#48 Madison Ave/I-15 SB Ramps & Kalmia St													
Base	114	0	226	259	56	260	0	1453	258	437	1127	512	4702
Added	0	0	0	0	0	0	0	0	0	0	0	0	0
Total	114	0	226	259	56	260	0	1453	258	437	1127	512	4702
#49 Monroe Ave & Murrieta Hot Springs Rd													
Base	0	0	0	0	0	0	0	0	0	0	0	0	0
Added	0	0	0	0	0	0	0	0	0	0	0	0	0
Total	0	0	0	0	0	0	0	0	0	0	0	0	0
#50 Hancock Ave & Murrieta Hot Springs Rd													
Base	0	0	0	398	0	652	708	1542	0	0	2617	548	6465
Added	0	0	0	0	0	0	0	0	0	0	0	0	0
Total	0	0	0	398	0	652	708	1542	0	0	2617	548	6465
#51 Alta Murrieta Dr & Murrieta Hot Springs Rd													
Base	224	80	19	69	129	325	260	982	280	127	1900	166	4561
Added	0	0	0	0	0	0	0	0	0	0	0	0	0
Total	224	80	19	69	129	325	260	982	280	127	1900	166	4561
#52 Winchester Road - SR-79 & Murrieta Hot Springs Rd													
Base	287	1481	151	154	1467	1400	809	276	103	281	894	81	7384
Added	0	0	0	0	0	0	0	0	0	0	0	0	0
Total	287	1481	151	154	1467	1400	809	276	103	281	894	81	7384
#53 Hancock Ave & Los Alamos Rd													
Base	49	120	214	740	266	92	71	943	80	981	1687	600	5843
Added	0	0	0	0	0	0	0	0	0	0	0	0	0
Total	49	120	214	740	266	92	71	943	80	981	1687	600	5843
#54 I-215 SB Ramps & Los Alamos Rd													
Base	0	0	0	397	0	2007	0	1348	464	236	1591	0	6043
Added	0	0	0	0	0	0	0	0	0	0	0	0	0
Total	0	0	0	397	0	2007	0	1348	464	236	1591	0	6043

City of Murrieta General Plan
Future General Plan (Scenario B)
AM Peak Hour

Volume Type	Northbound Left	Thru	Right	Southbound Left	Thru	Right	Eastbound Left	Thru	Right	Westbound Left	Thru	Right	Total Volume
#55 I-215 NB Ramps & Los Alamos Rd													
Base	510	0	269	0	0	0	571	1169	0	0	1326	140	3985
Added	0	0	0	0	0	0	0	0	0	0	0	0	0
Total	510	0	269	0	0	0	571	1169	0	0	1326	140	3985
#56 Whitewood Rd & Los Alamos Rd													
Base	86	322	40	31	540	725	656	225	111	52	247	29	3064
Added	0	0	0	0	0	0	0	0	0	0	0	0	0
Total	86	322	40	31	540	725	656	225	111	52	247	29	3064
#57 Whitewood Rd & Murrieta Hot Springs Rd													
Base	54	227	239	277	594	121	30	986	135	483	2115	144	5405
Added	0	0	0	0	0	0	0	0	0	0	0	0	0
Total	54	227	239	277	594	121	30	986	135	483	2115	144	5405
#58 Adams Ave & Guava St													
Base	0	0	0	0	0	0	0	0	0	0	0	0	0
Added	0	0	0	0	0	0	0	0	0	0	0	0	0
Total	0	0	0	0	0	0	0	0	0	0	0	0	0
#59 Nutmeg St & Clinton Keith Rd													
Base	75	44	497	424	57	72	46	1869	103	421	1467	167	5242
Added	0	0	0	0	0	0	0	0	0	0	0	0	0
Total	75	44	497	424	57	72	46	1869	103	421	1467	167	5242
#60 Murrieta Oaks Ave-Mitchell Rd & Clinton Keith Rd													
Base	105	208	106	40	121	339	140	2911	262	82	2191	351	6856
Added	0	0	0	0	0	0	0	0	0	0	0	0	0
Total	105	208	106	40	121	339	140	2911	262	82	2191	351	6856
#61 I-215 SB Ramps & Scott Rd													
Base	0	0	0	210	0	123	0	1031	430	0	929	338	3061
Added	0	0	0	0	0	0	0	0	0	0	0	0	0
Total	0	0	0	210	0	123	0	1031	430	0	929	338	3061
#62 I-215 NB Ramps & Scott Rd													
Base	0	15	615	0	0	281	155	1192	0	0	1036	329	3623
Added	0	0	0	0	0	0	0	0	0	0	0	0	0
Total	0	15	615	0	0	281	155	1192	0	0	1036	329	3623
#102 Leon Road & Scott Road													
Base	119	204	2	98	340	516	382	482	434	10	372	146	3105
Added	0	0	0	0	0	0	0	0	0	0	0	0	0
Total	119	204	2	98	340	516	382	482	434	10	372	146	3105

City of Murrieta General Plan
Future General Plan (Scenario B)
AM Peak Hour

Volume Type	Northbound Left	Northbound Thru	Northbound Right	Southbound Left	Southbound Thru	Southbound Right	Eastbound Left	Eastbound Thru	Eastbound Right	Westbound Left	Westbound Thru	Westbound Right	Total Volume
#104 Antelope Road & Keller Road													
Base	110	75	445	197	479	447	453	687	1048	677	509	31	5158
Added	0	0	0	0	0	0	0	0	0	0	0	0	0
Total	110	75	445	197	479	447	453	687	1048	677	509	31	5158
#105 Menifee Road - Meadowlark Road & Keller Road													
Base	28	289	292	126	1138	656	527	192	502	255	377	128	4510
Added	0	0	0	0	0	0	0	0	0	0	0	0	0
Total	28	289	292	126	1138	656	527	192	502	255	377	128	4510
#107 Leon Road & Keller Road													
Base	112	351	16	3	709	138	3	64	121	7	65	5	1594
Added	0	0	0	0	0	0	0	0	0	0	0	0	0
Total	112	351	16	3	709	138	3	64	121	7	65	5	1594
#108 Winchester Road - SR-79 & Keller Road													
Base	1	1563	26	5	2680	3	1	12	1	12	19	47	4370
Added	0	0	0	0	0	0	0	0	0	0	0	0	0
Total	1	1563	26	5	2680	3	1	12	1	12	19	47	4370
#112 Leon Road & Jean Nicholas													
Base	6	194	132	228	539	50	2	176	14	148	23	250	1762
Added	0	0	0	0	0	0	0	0	0	0	0	0	0
Total	6	194	132	228	539	50	2	176	14	148	23	250	1762
#122 Meadowlark Lane - Whitewood Road & Clinton Keith Road													
Base	101	121	1015	337	232	923	1090	682	126	1007	943	326	6903
Added	0	0	0	0	0	0	0	0	0	0	0	0	0
Total	101	121	1015	337	232	923	1090	682	126	1007	943	326	6903
#138 Jefferson Avenue & Cherry Street													
Base	87	628	194	36	640	21	1	47	6	146	1294	882	3982
Added	0	0	0	0	0	0	0	0	0	0	0	0	0
Total	87	628	194	36	640	21	1	47	6	146	1294	882	3982
#141 Jefferson Ave & Nutmeg St													
Base	193	357	265	84	1819	66	96	202	511	382	176	72	4223
Added	0	0	0	0	0	0	0	0	0	0	0	0	0
Total	193	357	265	84	1819	66	96	202	511	382	176	72	4223
#142 Jefferson Ave & Magnolia St													
Base	81	668	8	8	2498	242	166	1	155	28	3	1	3859
Added	0	0	0	0	0	0	0	0	0	0	0	0	0
Total	81	668	8	8	2498	242	166	1	155	28	3	1	3859

City of Murrieta General Plan
Future General Plan (Scenario B)
AM Peak Hour

Volume Type	Northbound Left	Northbound Thru	Northbound Right	Southbound Left	Southbound Thru	Southbound Right	Eastbound Left	Eastbound Thru	Eastbound Right	Westbound Left	Westbound Thru	Westbound Right	Total Volume
#149 Monroe Ave & Murrieta Hot Springs Rd													
Base	44	79	49	1	56	53	109	1196	37	8	1601	24	3257
Added	0	0	0	0	0	0	0	0	0	0	0	0	0
Total	44	79	49	1	56	53	109	1196	37	8	1601	24	3257
#158 Adams Ave & Guava St													
Base	70	76	18	100	20	42	21	326	47	3	267	99	1089
Added	0	0	0	0	0	0	0	0	0	0	0	0	0
Total	70	76	18	100	20	42	21	326	47	3	267	99	1089

City of Murrieta General Plan
Future General Plan (Scenario B)
AM Peak Hour

Impact Analysis Report
Level Of Service

Intersection	Base LOS	Base Del/ Veh	Base V/ C	Future LOS	Future Del/ Veh	Future V/ C	Change in
# 1 Menifee Road & Scott Road	E	60.0	1.015	E	60.0	1.015	+ 0.000 D/V
# 3 Winchester Road/SR-79 & Scott	F	177.3	1.518	F	177.3	1.518	+ 0.000 D/V
# 6 Briggs Road & Keller Road	B	17.2	0.517	B	17.2	0.517	+ 0.000 D/V
# 9 Antelope Road & Golden City Dr	C	25.3	0.941	C	25.3	0.941	+ 0.000 D/V
# 10 Whitewood Roa - /Meadowlark Ro	E	72.5	1.110	E	72.5	1.110	+ 0.000 D/V
# 11 Briggs Road & Baxter Road - Je	A	8.2	0.171	A	8.2	0.171	+ 0.000 D/V
# 13 Winchester Road - SR-79 & Nich	B	19.8	0.826	B	19.8	0.826	+ 0.000 D/V
# 14 Antelope Road & Linnel Lane Ex	C	24.6	0.610	C	24.6	0.610	+ 0.000 D/V
# 15 Whitewood Road - Meadowlark Ro	C	27.4	0.860	C	27.4	0.860	+ 0.000 D/V
# 16 Leon Road & Max Gillis Road	D	44.9	0.956	D	44.9	0.956	+ 0.000 D/V
# 17 Winchester Road - SR-79 & Max	C	26.2	0.786	C	26.2	0.786	+ 0.000 D/V
# 18 California Oaks Road & Clinton	E	67.3	1.158	E	67.3	1.158	+ 0.000 D/V
# 19 I-215 SB Off-Ramp & Clinton Ke	A	7.7	0.642	A	7.7	0.642	+ 0.000 D/V
# 20 I-215 NB Off Ramp & Clinton Ke	F	116.7	1.286	F	116.7	1.286	+ 0.000 D/V
# 21 Antelope Road & Clinton Keith	A	5.4	0.482	A	5.4	0.482	+ 0.000 D/V
# 23 Liberty Road & Clinton Keith R	A	2.0	0.467	A	2.0	0.467	+ 0.000 D/V
# 24 Leon Road & Clinton Keith Road	C	22.2	0.825	C	22.2	0.825	+ 0.000 D/V
# 25 Winchester Road - SR-79 & Bent	D	43.3	1.006	D	43.3	1.006	+ 0.000 D/V
# 26 Winchester Road - SR-79 & Via	C	24.3	0.895	C	24.3	0.895	+ 0.000 D/V
# 27 Monroe Ave & Los Alamos	C	24.5	0.595	C	24.5	0.595	+ 0.000 D/V
# 28 Jefferson Avenue & Murrieta Ho	F	122.9	1.382	F	122.9	1.382	+ 0.000 D/V
# 29 Madison Avenue & Murrieta Hot	C	27.7	0.718	C	27.7	0.718	+ 0.000 D/V
# 30 I-15 SB Off-Ramp & Murrieta Ho	B	16.1	0.733	B	16.1	0.733	+ 0.000 D/V

City of Murrieta General Plan
Future General Plan (Scenario B)
AM Peak Hour

Intersection	Base LOS	Base Del/ Veh	Base V/ C	Future LOS	Future Del/ Veh	Future V/ C	Change in
# 31 I-15 NB Off-Ramp & Murrieta Ho	A	5.5	0.407	A	5.5	0.407	+ 0.000 D/V
# 32 I-215 SB Off-Ramp & Murrieta H	B	12.3	0.700	B	12.3	0.700	+ 0.000 D/V
# 33 I-215 NB Off-Ramp & Murrieta H	A	5.5	0.604	A	5.5	0.604	+ 0.000 D/V
# 34 Jackson Avenue & Murrieta Hot	A	5.3	0.414	A	5.3	0.414	+ 0.000 D/V
# 35 Margarita Road & Murrieta Hot	C	24.5	0.661	C	24.5	0.661	+ 0.000 D/V
# 36 French Valley Parkway & Murrie	B	13.1	0.742	B	13.1	0.742	+ 0.000 D/V
# 37 Jefferson Avenue & Guava Stree	A	9.1	0.489	A	9.1	0.489	+ 0.000 D/V
# 39 Washington Ave & Calle Del Oso	C	26.7	0.689	C	26.7	0.689	+ 0.000 D/V
# 40 Clinton Keith Rd & Calle de Os	C	23.8	0.949	C	23.8	0.949	+ 0.000 D/V
# 43 Jefferson Ave & Lemon St	C	25.8	0.900	C	25.8	0.900	+ 0.000 D/V
# 44 Jefferson Ave & Kalmia St	E	56.4	1.054	E	56.4	1.054	+ 0.000 D/V
# 45 Jefferson Ave & Juniper St	C	23.5	0.825	C	23.5	0.825	+ 0.000 D/V
# 46 Jefferson Ave & Ivy St/Los Ala	C	26.2	0.703	C	26.2	0.703	+ 0.000 D/V
# 48 Madison Ave/I-15 SB Ramps & Ka	C	31.8	0.575	C	31.8	0.575	+ 0.000 D/V
# 50 Hancock Ave & Murrieta Hot Spr	B	18.0	0.786	B	18.0	0.786	+ 0.000 D/V
# 51 Alta Murrieta Dr & Murrieta Ho	C	24.1	0.615	C	24.1	0.615	+ 0.000 D/V
# 52 Winchester Road - SR-79 & Murr	F	107.1	1.370	F	107.1	1.370	+ 0.000 D/V
# 53 Hancock Ave & Los Alamos Rd	F	83.2	1.173	F	83.2	1.173	+ 0.000 D/V
# 54 I-215 SB Ramps & Los Alamos Rd	E	77.7	1.104	E	77.7	1.104	+ 0.000 D/V
# 55 I-215 NB Ramps & Los Alamos Rd	C	25.0	0.813	C	25.0	0.813	+ 0.000 D/V
# 56 Whitewood Rd & Los Alamos Rd	D	40.2	0.938	D	40.2	0.938	+ 0.000 D/V
# 57 Whitewood Rd & Murrieta Hot Sp	C	28.4	0.777	C	28.4	0.777	+ 0.000 D/V
# 59 Nutmeg St & Clinton Keith Rd	F	88.0	1.171	F	88.0	1.171	+ 0.000 D/V
# 60 Murrieta Oaks Ave-Mitchell Rd	C	26.2	0.933	C	26.2	0.933	+ 0.000 D/V
# 61 I-215 SB Ramps & Scott Rd	A	7.6	0.239	A	7.6	0.239	+ 0.000 D/V

City of Murrieta General Plan
Future General Plan (Scenario B)
AM Peak Hour

Intersection	Base LOS	Base Del/ Veh	Base V/ C	Future LOS	Future Del/ Veh	Future V/ C	Change in
# 62 I-215 NB Ramps & Scott Rd	B	15.8	0.391	B	15.8	0.391	+ 0.000 D/V
#102 Leon Road & Scott Road	C	28.6	0.696	C	28.6	0.696	+ 0.000 D/V
#104 Antelope Road & Keller Road	F	130.8	1.409	F	130.8	1.409	+ 0.000 D/V
#105 Menifee Road - Meadowlark Road	D	45.1	0.994	D	45.1	0.994	+ 0.000 D/V
#107 Leon Road & Keller Road	B	13.7	0.342	B	13.7	0.342	+ 0.000 D/V
#108 Winchester Road - SR-79 & Kell	A	1.5	0.547	A	1.5	0.547	+ 0.000 D/V
#112 Leon Road & Jean Nicholas	C	23.0	0.384	C	23.0	0.384	+ 0.000 D/V
#122 Meadowlark Lane - Whitewood Ro	F	106.9	1.238	F	106.9	1.238	+ 0.000 D/V
#138 Jefferson Avenue & Cherry Stre	C	21.8	0.776	C	21.8	0.776	+ 0.000 D/V
#141 Jefferson Ave & Nutmeg St	D	52.4	1.001	D	52.4	1.001	+ 0.000 D/V
#142 Jefferson Ave & Magnolia St	B	10.7	0.692	B	10.7	0.692	+ 0.000 D/V
#149 Monroe Ave & Murrieta Hot Spri	A	8.3	0.336	A	8.3	0.336	+ 0.000 D/V
#158 Adams Ave & Guava St	B	11.7	0.283	B	11.7	0.283	+ 0.000 D/V

City of Murrieta General Plan
Future General Plan (Scenario B)
AM Peak Hour

Level Of Service Computation Report
2000 HCM Operations Method (Future Volume Alternative)

Intersection #1 Menifee Road & Scott Road

Cycle (sec): 100 Critical Vol./Cap.(X): 1.015
Loss Time (sec): 0 (Y+R=4.0 sec) Average Delay (sec/veh): 60.0
Optimal Cycle: 180 Level Of Service: E

Street Name:	Menifee Rd						Scott Rd					
Approach:	North Bound			South Bound			East Bound			West Bound		
Movement:	L	T	R	L	T	R	L	T	R	L	T	R
Control:	Protected			Protected			Protected			Protected		
Rights:	Include			Include			Include			Include		
Min. Green:	0	0	0	0	0	0	0	0	0	0	0	0
Lanes:	1 0	1	1 0	1 0	1	1 0	1 0	2	1 0	1 0	2	1 0
Volume Module:												
Base Vol:	256	394	414	250	735	89	111	557	303	799	488	262
Growth Adj:	1.00	1.00	1.00	1.00	1.00	1.00	1.00	1.00	1.00	1.00	1.00	1.00
Initial Bse:	256	394	414	250	735	89	111	557	303	799	488	262
Added Vol:	0	0	0	0	0	0	0	0	0	0	0	0
PasserByVol:	0	0	0	0	0	0	0	0	0	0	0	0
Initial Fut:	256	394	414	250	735	89	111	557	303	799	488	262
User Adj:	1.00	1.00	1.00	1.00	1.00	1.00	1.00	1.00	1.00	1.00	1.00	1.00
PHF Adj:	1.00	1.00	1.00	1.00	1.00	1.00	1.00	1.00	1.00	1.00	1.00	1.00
PHF Volume:	256	394	414	250	735	89	111	557	303	799	488	262
Reduct Vol:	0	0	0	0	0	0	0	0	0	0	0	0
Reduced Vol:	256	394	414	250	735	89	111	557	303	799	488	262
PCE Adj:	1.00	1.00	1.00	1.00	1.00	1.00	1.00	1.00	1.00	1.00	1.00	1.00
MLF Adj:	1.00	1.00	1.00	1.00	1.00	1.00	1.00	1.00	1.00	1.00	1.00	1.00
FinalVolume:	256	394	414	250	735	89	111	557	303	799	488	262
Saturation Flow Module:												
Sat/Lane:	1900	1900	1900	1900	1900	1900	1900	1900	1900	1900	1900	1900
Adjustment:	0.95	0.88	0.88	0.95	0.93	0.93	0.95	0.86	0.86	0.95	0.86	0.86
Lanes:	1.00	1.00	1.00	1.00	1.78	0.22	1.00	2.00	1.00	1.00	2.00	1.00
Final Sat.:	1805	1666	1666	1805	3169	384	1805	3275	1637	1805	3278	1639
Capacity Analysis Module:												
Vol/Sat:	0.14	0.24	0.25	0.14	0.23	0.23	0.06	0.17	0.19	0.44	0.15	0.16
Crit Moves:			****	****					****	****		
Green/Cycle:	0.14	0.24	0.24	0.14	0.24	0.24	0.17	0.18	0.18	0.44	0.45	0.45
Volume/Cap:	0.98	0.97	1.01	1.01	0.98	0.98	0.36	0.93	1.01	1.01	0.33	0.36
Delay/Veh:	92.6	60.3	73.4	104.3	64.0	64.0	37.2	56.1	75.5	64.0	18.1	18.3
User DelAdj:	1.00	1.00	1.00	1.00	1.00	1.00	1.00	1.00	1.00	1.00	1.00	1.00
AdjDel/Veh:	92.6	60.3	73.4	104.3	64.0	64.0	37.2	56.1	75.5	64.0	18.1	18.3
LOS by Move:	F	E	E	F	E	E	D	E	E	E	B	B
HCM2kAvgQ:	12	18	20	13	19	19	3	13	16	33	5	6

Note: Queue reported is the number of cars per lane.

City of Murrieta General Plan
Future General Plan (Scenario B)
AM Peak Hour

Level Of Service Computation Report
2000 HCM Operations Method (Future Volume Alternative)

Intersection #3 Winchester Road/SR-79 & Scott Road

Cycle (sec): 100 Critical Vol./Cap.(X): 1.518
Loss Time (sec): 0 (Y+R=4.0 sec) Average Delay (sec/veh): 177.3
Optimal Cycle: 180 Level Of Service: F

Street Name:	Winchester Road/SR-79						Scott Road					
Approach:	North Bound			South Bound			East Bound			West Bound		
Movement:	L -	T -	R	L -	T -	R	L -	T -	R	L -	T -	R
Control:	Protected			Protected			Protected			Protected		
Rights:	Include			Include			Include			Include		
Min. Green:	0	0	0	0	0	0	0	0	0	0	0	0
Lanes:	1 0	2	1 0	1 0	2	1 0	1 0	2	1 0	1 0	2	1 0
Volume Module:												
Base Vol:	114	1419	52	946	2576	75	115	175	65	16	153	971
Growth Adj:	1.00	1.00	1.00	1.00	1.00	1.00	1.00	1.00	1.00	1.00	1.00	1.00
Initial Bse:	114	1419	52	946	2576	75	115	175	65	16	153	971
Added Vol:	0	0	0	0	0	0	0	0	0	0	0	0
PasserByVol:	0	0	0	0	0	0	0	0	0	0	0	0
Initial Fut:	114	1419	52	946	2576	75	115	175	65	16	153	971
User Adj:	1.00	1.00	1.00	1.00	1.00	1.00	1.00	1.00	1.00	1.00	1.00	1.00
PHF Adj:	1.00	1.00	1.00	1.00	1.00	1.00	1.00	1.00	1.00	1.00	1.00	1.00
PHF Volume:	114	1419	52	946	2576	75	115	175	65	16	153	971
Reduct Vol:	0	0	0	0	0	0	0	0	0	0	0	0
Reduced Vol:	114	1419	52	946	2576	75	115	175	65	16	153	971
PCE Adj:	1.00	1.00	1.00	1.00	1.00	1.00	1.00	1.00	1.00	1.00	1.00	1.00
MLF Adj:	1.00	1.00	1.00	1.00	1.00	1.00	1.00	1.00	1.00	1.00	1.00	1.00
FinalVolume:	114	1419	52	946	2576	75	115	175	65	16	153	971
Saturation Flow Module:												
Sat/Lane:	1900	1900	1900	1900	1900	1900	1900	1900	1900	1900	1900	1900
Adjustment:	0.95	0.91	0.91	0.95	0.91	0.91	0.95	0.87	0.87	0.95	0.79	0.79
Lanes:	1.00	2.89	0.11	1.00	2.92	0.08	1.00	2.19	0.81	1.00	2.00	1.00
Final Sat.:	1805	4979	182	1805	5020	146	1805	3627	1347	1805	3008	1504
Capacity Analysis Module:												
Vol/Sat:	0.06	0.29	0.29	0.52	0.51	0.51	0.06	0.05	0.05	0.01	0.05	0.65
Crit Moves:		****		****			****					****
Green/Cycle:	0.06	0.19	0.19	0.35	0.47	0.47	0.04	0.39	0.39	0.07	0.43	0.43
Volume/Cap:	1.08	1.52	1.52	1.52	1.08	1.08	1.52	0.12	0.12	0.12	0.12	1.52
Delay/Veh:	158.4	279	279.2	274.2	70.9	70.9	337.3	19.3	19.3	43.8	17.4	268.9
User DelAdj:	1.00	1.00	1.00	1.00	1.00	1.00	1.00	1.00	1.00	1.00	1.00	1.00
AdjDel/Veh:	158.4	279	279.2	274.2	70.9	70.9	337.3	19.3	19.3	43.8	17.4	268.9
LOS by Move:	F	F	F	F	E	E	F	B	B	D	B	F
HCM2kAvgQ:	8	41	41	69	43	43	10	2	2	1	2	78

Note: Queue reported is the number of cars per lane.

City of Murrieta General Plan
Future General Plan (Scenario B)
AM Peak Hour

Level Of Service Computation Report
2000 HCM Operations Method (Future Volume Alternative)

Intersection #6 Briggs Road & Keller Road

Cycle (sec): 100 Critical Vol./Cap.(X): 0.517
Loss Time (sec): 0 (Y+R=4.0 sec) Average Delay (sec/veh): 17.2
Optimal Cycle: 47 Level Of Service: B

Street Name:	Briggs Road						Keller Road					
Approach:	North Bound			South Bound			East Bound			West Bound		
Movement:	L -	T -	R	L -	T -	R	L -	T -	R	L -	T -	R
Control:	Protected			Protected			Protected			Protected		
Rights:	Include			Include			Include			Include		
Min. Green:	0	0	0	0	0	0	0	0	0	0	0	0
Lanes:	1 0	1	1 0	1 0	1	1 0	1 0	1	1 0	1 0	1	1 0
Volume Module:												
Base Vol:	304	19	53	0	33	42	2	90	498	13	328	1
Growth Adj:	1.00	1.00	1.00	1.00	1.00	1.00	1.00	1.00	1.00	1.00	1.00	1.00
Initial Bse:	304	19	53	0	33	42	2	90	498	13	328	1
Added Vol:	0	0	0	0	0	0	0	0	0	0	0	0
PasserByVol:	0	0	0	0	0	0	0	0	0	0	0	0
Initial Fut:	304	19	53	0	33	42	2	90	498	13	328	1
User Adj:	1.00	1.00	1.00	1.00	1.00	1.00	1.00	1.00	1.00	1.00	1.00	1.00
PHF Adj:	1.00	1.00	1.00	1.00	1.00	1.00	1.00	1.00	1.00	1.00	1.00	1.00
PHF Volume:	304	19	53	0	33	42	2	90	498	13	328	1
Reduct Vol:	0	0	0	0	0	0	0	0	0	0	0	0
Reduced Vol:	304	19	53	0	33	42	2	90	498	13	328	1
PCE Adj:	1.00	1.00	1.00	1.00	1.00	1.00	1.00	1.00	1.00	1.00	1.00	1.00
MLF Adj:	1.00	1.00	1.00	1.00	1.00	1.00	1.00	1.00	1.00	1.00	1.00	1.00
FinalVolume:	304	19	53	0	33	42	2	90	498	13	328	1
Saturation Flow Module:												
Sat/Lane:	1900	1900	1900	1900	1900	1900	1900	1900	1900	1900	1900	1900
Adjustment:	0.95	0.85	0.85	1.00	0.87	0.87	0.95	0.83	0.83	0.95	0.95	0.95
Lanes:	1.00	1.00	1.00	1.00	1.00	1.00	1.00	1.00	1.00	1.00	1.99	0.01
Final Sat.:	1805	1606	1606	1900	1653	1653	1805	1576	1576	1805	3599	11
Capacity Analysis Module:												
Vol/Sat:	0.17	0.01	0.03	0.00	0.02	0.03	0.00	0.06	0.32	0.01	0.09	0.09
Crit Moves:	****					****			****	****		
Green/Cycle:	0.33	0.37	0.37	0.00	0.05	0.05	0.01	0.61	0.61	0.01	0.62	0.62
Volume/Cap:	0.52	0.03	0.09	0.00	0.41	0.52	0.15	0.09	0.52	0.52	0.15	0.15
Delay/Veh:	28.1	19.8	20.3	0.0	47.6	49.6	54.3	8.0	11.5	66.5	8.1	8.1
User DelAdj:	1.00	1.00	1.00	1.00	1.00	1.00	1.00	1.00	1.00	1.00	1.00	1.00
AdjDel/Veh:	28.1	19.8	20.3	0.0	47.6	49.6	54.3	8.0	11.5	66.5	8.1	8.1
LOS by Move:	C	B	C	A	D	D	D	A	B	E	A	A
HCM2kAvgQ:	8	0	1	0	2	2	0	1	9	1	2	2

Note: Queue reported is the number of cars per lane.

City of Murrieta General Plan
Future General Plan (Scenario B)
AM Peak Hour

Level Of Service Computation Report
2000 HCM Operations Method (Future Volume Alternative)

Intersection #9 Antelope Road & Golden City Drive - Baxter Road

Cycle (sec): 100 Critical Vol./Cap.(X): 0.941
Loss Time (sec): 0 (Y+R=4.0 sec) Average Delay (sec/veh): 25.3
Optimal Cycle: 180 Level Of Service: C

Street Name:	Antelope Road						Golden City Drive - Baxter Road					
Approach:	North Bound			South Bound			East Bound			West Bound		
Movement:	L -	T -	R	L -	T -	R	L -	T -	R	L -	T -	R
Control:	Permitted			Permitted			Permitted			Permitted		
Rights:	Include			Include			Include			Include		
Min. Green:	0	0	0	0	0	0	0	0	0	0	0	0
Lanes:	1 0	1	1 0	1 0	1	1 0	1 0	1	1 0	1 0	1	1 0
Volume Module:												
Base Vol:	3	178	593	261	881	30	1	51	9	308	209	684
Growth Adj:	1.00	1.00	1.00	1.00	1.00	1.00	1.00	1.00	1.00	1.00	1.00	1.00
Initial Bse:	3	178	593	261	881	30	1	51	9	308	209	684
Added Vol:	0	0	0	0	0	0	0	0	0	0	0	0
PasserByVol:	0	0	0	0	0	0	0	0	0	0	0	0
Initial Fut:	3	178	593	261	881	30	1	51	9	308	209	684
User Adj:	1.00	1.00	1.00	1.00	1.00	1.00	1.00	1.00	1.00	1.00	1.00	1.00
PHF Adj:	1.00	1.00	1.00	1.00	1.00	1.00	1.00	1.00	1.00	1.00	1.00	1.00
PHF Volume:	3	178	593	261	881	30	1	51	9	308	209	684
Reduct Vol:	0	0	0	0	0	0	0	0	0	0	0	0
Reduced Vol:	3	178	593	261	881	30	1	51	9	308	209	684
PCE Adj:	1.00	1.00	1.00	1.00	1.00	1.00	1.00	1.00	1.00	1.00	1.00	1.00
MLF Adj:	1.00	1.00	1.00	1.00	1.00	1.00	1.00	1.00	1.00	1.00	1.00	1.00
FinalVolume:	3	178	593	261	881	30	1	51	9	308	209	684
Saturation Flow Module:												
Sat/Lane:	1900	1900	1900	1900	1900	1900	1900	1900	1900	1900	1900	1900
Adjustment:	0.22	0.84	0.84	0.27	0.95	0.95	0.18	0.93	0.93	0.70	0.84	0.84
Lanes:	1.00	1.00	1.00	1.00	1.93	0.07	1.00	1.70	0.30	1.00	1.00	1.00
Final Sat.:	414	1597	1597	509	3474	118	348	3001	530	1334	1597	1597
Capacity Analysis Module:												
Vol/Sat:	0.01	0.11	0.37	0.51	0.25	0.25	0.00	0.02	0.02	0.23	0.13	0.43
Crit Moves:				****								****
Green/Cycle:	0.54	0.54	0.54	0.54	0.54	0.54	0.46	0.46	0.46	0.46	0.46	0.46
Volume/Cap:	0.01	0.20	0.68	0.94	0.47	0.47	0.01	0.04	0.04	0.51	0.29	0.94
Delay/Veh:	10.5	11.7	18.2	59.5	14.1	14.1	14.9	15.1	15.1	20.0	17.1	42.7
User DelAdj:	1.00	1.00	1.00	1.00	1.00	1.00	1.00	1.00	1.00	1.00	1.00	1.00
AdjDel/Veh:	10.5	11.7	18.2	59.5	14.1	14.1	14.9	15.1	15.1	20.0	17.1	42.7
LOS by Move:	B	B	B	E	B	B	B	B	B	C	B	D
HCM2kAvgQ:	0	3	15	12	9	9	0	1	1	7	4	26

Note: Queue reported is the number of cars per lane.

City of Murrieta General Plan
Future General Plan (Scenario B)
AM Peak Hour

Level Of Service Computation Report
2000 HCM Operations Method (Future Volume Alternative)

Intersection #10 Whitewood Roa - /Meadowlark Road & Golden City Drive - Baxter R

Cycle (sec): 100 Critical Vol./Cap.(X): 1.110
Loss Time (sec): 0 (Y+R=4.0 sec) Average Delay (sec/veh): 72.5
Optimal Cycle: 180 Level Of Service: E

Street Name:	Whitewood Road - Meadowlark Road						Golden City Drive - Baxter Road					
Approach:	North Bound			South Bound			East Bound			West Bound		
Movement:	L -	T -	R	L -	T -	R	L -	T -	R	L -	T -	R
Control:	Protected			Protected			Protected			Protected		
Rights:	Include			Include			Include			Include		
Min. Green:	0	0	0	0	0	0	0	0	0	0	0	0
Lanes:	1 0	1	1 0	1 0	1	1 0	1 0	1	1 0	1 0	1	1 0
Volume Module:												
Base Vol:	343	813	2	0	778	798	66	4	677	1	15	2
Growth Adj:	1.00	1.00	1.00	1.00	1.00	1.00	1.00	1.00	1.00	1.00	1.00	1.00
Initial Bse:	343	813	2	0	778	798	66	4	677	1	15	2
Added Vol:	0	0	0	0	0	0	0	0	0	0	0	0
PasserByVol:	0	0	0	0	0	0	0	0	0	0	0	0
Initial Fut:	343	813	2	0	778	798	66	4	677	1	15	2
User Adj:	1.00	1.00	1.00	1.00	1.00	1.00	1.00	1.00	1.00	1.00	1.00	1.00
PHF Adj:	1.00	1.00	1.00	1.00	1.00	1.00	1.00	1.00	1.00	1.00	1.00	1.00
PHF Volume:	343	813	2	0	778	798	66	4	677	1	15	2
Reduct Vol:	0	0	0	0	0	0	0	0	0	0	0	0
Reduced Vol:	343	813	2	0	778	798	66	4	677	1	15	2
PCE Adj:	1.00	1.00	1.00	1.00	1.00	1.00	1.00	1.00	1.00	1.00	1.00	1.00
MLF Adj:	1.00	1.00	1.00	1.00	1.00	1.00	1.00	1.00	1.00	1.00	1.00	1.00
FinalVolume:	343	813	2	0	778	798	66	4	677	1	15	2
Saturation Flow Module:												
Sat/Lane:	1900	1900	1900	1900	1900	1900	1900	1900	1900	1900	1900	1900
Adjustment:	0.95	0.95	0.95	1.00	0.88	0.88	0.95	0.81	0.81	0.95	0.93	0.93
Lanes:	1.00	1.99	0.01	1.00	1.00	1.00	1.00	1.00	1.00	1.00	1.76	0.24
Final Sat.:	1805	3601	9	1900	1668	1668	1805	1536	1536	1805	3128	417
Capacity Analysis Module:												
Vol/Sat:	0.19	0.23	0.23	0.00	0.47	0.48	0.04	0.00	0.44	0.00	0.00	0.00
Crit Moves:	****					****			****	****		
Green/Cycle:	0.17	0.60	0.60	0.00	0.43	0.43	0.35	0.40	0.40	0.00	0.05	0.05
Volume/Cap:	1.11	0.37	0.37	0.00	1.08	1.11	0.10	0.01	1.11	1.11	0.10	0.10
Delay/Veh:	125.5	10.3	10.3	0.0	77.6	88.4	21.9	18.2	100.4	1074	46.0	46.0
User DelAdj:	1.00	1.00	1.00	1.00	1.00	1.00	1.00	1.00	1.00	1.00	1.00	1.00
AdjDel/Veh:	125.5	10.3	10.3	0.0	77.6	88.4	21.9	18.2	100.4	1074	46.0	46.0
LOS by Move:	F	B	B	A	E	F	C	B	F	F	D	D
HCM2kAvgQ:	19	7	7	0	37	40	1	0	35	0	0	0

Note: Queue reported is the number of cars per lane.

City of Murrieta General Plan
Future General Plan (Scenario B)
AM Peak Hour

Level Of Service Computation Report
2000 HCM Operations Method (Future Volume Alternative)

Intersection #11 Briggs Road & Baxter Road - Jean Nicholas

Cycle (sec): 100 | Critical Vol./Cap.(X): 0.171
Loss Time (sec): 0 (Y+R=4.0 sec) | Average Delay (sec/veh): 8.2
Optimal Cycle: 27 | Level Of Service: A

Street Name:	Briggs Road						Baxter Road - Jean Nicholas					
Approach:	North Bound			South Bound			East Bound			West Bound		
Movement:	L	T	R	L	T	R	L	T	R	L	T	R
Control:	Protected			Protected			Protected			Protected		
Rights:	Include			Include			Include			Include		
Min. Green:	0	0	0	0	0	0	0	0	0	0	0	0
Lanes:	0	0	1 1 0	1	0	2 0 0	0	0	0 0 0	1	0	0 0 1
Volume Module:												
Base Vol:	0	182	27	57	505	0	0	0	0	3	0	50
Growth Adj:	1.00	1.00	1.00	1.00	1.00	1.00	1.00	1.00	1.00	1.00	1.00	1.00
Initial Bse:	0	182	27	57	505	0	0	0	0	3	0	50
Added Vol:	0	0	0	0	0	0	0	0	0	0	0	0
PasserByVol:	0	0	0	0	0	0	0	0	0	0	0	0
Initial Fut:	0	182	27	57	505	0	0	0	0	3	0	50
User Adj:	1.00	1.00	1.00	1.00	1.00	1.00	1.00	1.00	1.00	1.00	1.00	1.00
PHF Adj:	1.00	1.00	1.00	1.00	1.00	1.00	1.00	1.00	1.00	1.00	1.00	1.00
PHF Volume:	0	182	27	57	505	0	0	0	0	3	0	50
Reduct Vol:	0	0	0	0	0	0	0	0	0	0	0	0
Reduced Vol:	0	182	27	57	505	0	0	0	0	3	0	50
PCE Adj:	1.00	1.00	1.00	1.00	1.00	1.00	1.00	1.00	1.00	1.00	1.00	1.00
MLF Adj:	1.00	1.00	1.00	1.00	1.00	1.00	1.00	1.00	1.00	1.00	1.00	1.00
FinalVolume:	0	182	27	57	505	0	0	0	0	3	0	50
Saturation Flow Module:												
Sat/Lane:	1900	1900	1900	1900	1900	1900	1900	1900	1900	1900	1900	1900
Adjustment:	1.00	0.93	0.93	0.95	0.95	1.00	1.00	1.00	1.00	0.95	1.00	0.85
Lanes:	0.00	1.74	0.26	1.00	2.00	0.00	0.00	0.00	0.00	1.00	0.00	1.00
Final Sat.:	0	3084	458	1805	3610	0	0	0	0	1805	0	1615
Capacity Analysis Module:												
Vol/Sat:	0.00	0.06	0.06	0.03	0.14	0.00	0.00	0.00	0.00	0.00	0.00	0.03
Crit Moves:	****				****							****
Green/Cycle:	0.00	0.53	0.53	0.29	0.82	0.00	0.00	0.00	0.00	0.18	0.00	0.18
Volume/Cap:	0.00	0.11	0.11	0.11	0.17	0.00	0.00	0.00	0.00	0.01	0.00	0.17
Delay/Veh:	0.0	11.6	11.6	26.5	1.9	0.0	0.0	0.0	0.0	33.6	0.0	34.9
User DelAdj:	1.00	1.00	1.00	1.00	1.00	1.00	1.00	1.00	1.00	1.00	1.00	1.00
AdjDel/Veh:	0.0	11.6	11.6	26.5	1.9	0.0	0.0	0.0	0.0	33.6	0.0	34.9
LOS by Move:	A	B	B	C	A	A	A	A	A	C	A	C
HCM2kAvgQ:	0	2	2	1	2	0	0	0	0	0	0	1

Note: Queue reported is the number of cars per lane.

City of Murrieta General Plan
Future General Plan (Scenario B)
AM Peak Hour

Level Of Service Computation Report
2000 HCM Operations Method (Future Volume Alternative)

Intersection #13 Winchester Road - SR-79 & Nicholas - Skyview

Cycle (sec): 100 | Critical Vol./Cap.(X): 0.826
Loss Time (sec): 0 (Y+R=4.0 sec) | Average Delay (sec/veh): 19.8
Optimal Cycle: 131 | Level Of Service: B

Street Name:	Winchester Road - SR-79						Nicholas - Skyview					
Approach:	North Bound			South Bound			East Bound			West Bound		
Movement:	L	T	R	L	T	R	L	T	R	L	T	R
Control:	Protected			Protected			Protected			Protected		
Rights:	Include			Include			Include			Include		
Min. Green:	0	0	0	0	0	0	0	0	0	0	0	0
Lanes:	1	0	2 1 0	1	0	2 1 0	1	0	1 1 0	1	0	1 1 0
Volume Module:												
Base Vol:	136	1408	350	20	2816	29	36	331	139	119	333	174
Growth Adj:	1.00	1.00	1.00	1.00	1.00	1.00	1.00	1.00	1.00	1.00	1.00	1.00
Initial Bse:	136	1408	350	20	2816	29	36	331	139	119	333	174
Added Vol:	0	0	0	0	0	0	0	0	0	0	0	0
PasserByVol:	0	0	0	0	0	0	0	0	0	0	0	0
Initial Fut:	136	1408	350	20	2816	29	36	331	139	119	333	174
User Adj:	1.00	1.00	1.00	1.00	1.00	1.00	1.00	1.00	1.00	1.00	1.00	1.00
PHF Adj:	1.00	1.00	1.00	1.00	1.00	1.00	1.00	1.00	1.00	1.00	1.00	1.00
PHF Volume:	136	1408	350	20	2816	29	36	331	139	119	333	174
Reduct Vol:	0	0	0	0	0	0	0	0	0	0	0	0
Reduced Vol:	136	1408	350	20	2816	29	36	331	139	119	333	174
PCE Adj:	1.00	1.00	1.00	1.00	1.00	1.00	1.00	1.00	1.00	1.00	1.00	1.00
MLF Adj:	1.00	1.00	1.00	1.00	1.00	1.00	1.00	1.00	1.00	1.00	1.00	1.00
FinalVolume:	136	1408	350	20	2816	29	36	331	139	119	333	174
Saturation Flow Module:												
Sat/Lane:	1900	1900	1900	1900	1900	1900	1900	1900	1900	1900	1900	1900
Adjustment:	0.95	0.88	0.88	0.95	0.91	0.91	0.95	0.91	0.91	0.95	0.90	0.90
Lanes:	1.00	2.40	0.60	1.00	2.97	0.03	1.00	1.41	0.59	1.00	1.31	0.69
Final Sat.:	1805	4030	1002	1805	5129	53	1805	2430	1021	1805	2250	1176
Capacity Analysis Module:												
Vol/Sat:	0.08	0.35	0.35	0.01	0.55	0.55	0.02	0.14	0.14	0.07	0.15	0.15
Crit Moves:	****				****			****		****		
Green/Cycle:	0.09	0.73	0.73	0.02	0.66	0.66	0.03	0.16	0.16	0.08	0.22	0.22
Volume/Cap:	0.83	0.48	0.48	0.48	0.83	0.83	0.69	0.83	0.83	0.83	0.69	0.69
Delay/Veh:	72.4	5.6	5.6	56.6	14.3	14.3	79.9	50.1	50.1	76.2	38.8	38.8
User DelAdj:	1.00	1.00	1.00	1.00	1.00	1.00	1.00	1.00	1.00	1.00	1.00	1.00
AdjDel/Veh:	72.4	5.6	5.6	56.6	14.3	14.3	79.9	50.1	50.1	76.2	38.8	38.8
LOS by Move:	E	A	A	E	B	B	E	D	D	E	D	D
HCM2kAvgQ:	6	8	8	1	26	26	2	10	10	6	9	9

Note: Queue reported is the number of cars per lane.

City of Murrieta General Plan
Future General Plan (Scenario B)
AM Peak Hour

Level Of Service Computation Report
2000 HCM Operations Method (Future Volume Alternative)

Intersection #14 Antelope Road & Linnel Lane Extension

Cycle (sec): 100 | Critical Vol./Cap.(X): 0.610
Loss Time (sec): 0 (Y+R=4.0 sec) | Average Delay (sec/veh): 24.6
Optimal Cycle: 58 | Level Of Service: C

Street Name:	Antelope Road						Linnel Lane Extension					
Approach:	North Bound			South Bound			East Bound			West Bound		
Movement:	L	T	R	L	T	R	L	T	R	L	T	R
Control:	Protected			Protected			Protected			Protected		
Rights:	Include			Include			Include			Include		
Min. Green:	0	0	0	0	0	0	0	0	0	0	0	0
Lanes:	1	0 1	1 0	1	0 1	1 0	1	0 1	1 0	1	0 1	1 0
Volume Module:												
Base Vol:	18	731	77	58	525	341	239	504	230	14	177	355
Growth Adj:	1.00	1.00	1.00	1.00	1.00	1.00	1.00	1.00	1.00	1.00	1.00	1.00
Initial Bse:	18	731	77	58	525	341	239	504	230	14	177	355
Added Vol:	0	0	0	0	0	0	0	0	0	0	0	0
PasserByVol:	0	0	0	0	0	0	0	0	0	0	0	0
Initial Fut:	18	731	77	58	525	341	239	504	230	14	177	355
User Adj:	1.00	1.00	1.00	1.00	1.00	1.00	1.00	1.00	1.00	1.00	1.00	1.00
PHF Adj:	1.00	1.00	1.00	1.00	1.00	1.00	1.00	1.00	1.00	1.00	1.00	1.00
PHF Volume:	18	731	77	58	525	341	239	504	230	14	177	355
Reduct Vol:	0	0	0	0	0	0	0	0	0	0	0	0
Reduced Vol:	18	731	77	58	525	341	239	504	230	14	177	355
PCE Adj:	1.00	1.00	1.00	1.00	1.00	1.00	1.00	1.00	1.00	1.00	1.00	1.00
MLF Adj:	1.00	1.00	1.00	1.00	1.00	1.00	1.00	1.00	1.00	1.00	1.00	1.00
FinalVolume:	18	731	77	58	525	341	239	504	230	14	177	355
Saturation Flow Module:												
Sat/Lane:	1900	1900	1900	1900	1900	1900	1900	1900	1900	1900	1900	1900
Adjustment:	0.95	0.94	0.94	0.95	0.89	0.89	0.95	0.91	0.91	0.95	0.86	0.86
Lanes:	1.00	1.81	0.19	1.00	1.21	0.79	1.00	1.37	0.63	1.00	1.00	1.00
Final Sat.:	1805	3220	339	1805	2059	1338	1805	2362	1078	1805	1625	1625
Capacity Analysis Module:												
Vol/Sat:	0.01	0.23	0.23	0.03	0.25	0.25	0.13	0.21	0.21	0.01	0.11	0.22
Crit Moves:		****		****			****					****
Green/Cycle:	0.02	0.37	0.37	0.05	0.41	0.41	0.22	0.56	0.56	0.02	0.36	0.36
Volume/Cap:	0.62	0.61	0.61	0.61	0.62	0.62	0.61	0.38	0.38	0.38	0.30	0.61
Delay/Veh:	84.6	26.3	26.3	57.4	24.4	24.4	38.1	12.7	12.7	55.0	23.2	27.6
User DelAdj:	1.00	1.00	1.00	1.00	1.00	1.00	1.00	1.00	1.00	1.00	1.00	1.00
AdjDel/Veh:	84.6	26.3	26.3	57.4	24.4	24.4	38.1	12.7	12.7	55.0	23.2	27.6
LOS by Move:	F	C	C	E	C	C	D	B	B	E	C	C
HCM2kAvgQ:	1	11	11	3	12	12	7	7	7	1	4	10

Note: Queue reported is the number of cars per lane.

City of Murrieta General Plan
Future General Plan (Scenario B)
AM Peak Hour

Level Of Service Computation Report
2000 HCM Operations Method (Future Volume Alternative)

Intersection #15 Whitewood Road - Meadowlark Road & Linnel Lane Extension

Cycle (sec): 100 | Critical Vol./Cap.(X): 0.860
Loss Time (sec): 0 (Y+R=4.0 sec) | Average Delay (sec/veh): 27.4
Optimal Cycle: 163 | Level Of Service: C

Street Name:	Whitewood Road - Meadowlark Road						Linnel Lane Extension (Future)					
Approach:	North Bound			South Bound			East Bound			West Bound		
Movement:	L	T	R	L	T	R	L	T	R	L	T	R
Control:	Protected			Protected			Protected			Protected		
Rights:	Include			Include			Include			Include		
Min. Green:	0	0	0	0	0	0	0	0	0	0	0	0
Lanes:	1	0 1	1 0	1	0 1	1 0	1	0 1	1 0	1	0 1	1 0
Volume Module:												
Base Vol:	34	1000	736	271	754	313	36	530	74	24	197	290
Growth Adj:	1.00	1.00	1.00	1.00	1.00	1.00	1.00	1.00	1.00	1.00	1.00	1.00
Initial Bse:	34	1000	736	271	754	313	36	530	74	24	197	290
Added Vol:	0	0	0	0	0	0	0	0	0	0	0	0
PasserByVol:	0	0	0	0	0	0	0	0	0	0	0	0
Initial Fut:	34	1000	736	271	754	313	36	530	74	24	197	290
User Adj:	1.00	1.00	1.00	1.00	1.00	1.00	1.00	1.00	1.00	1.00	1.00	1.00
PHF Adj:	1.00	1.00	1.00	1.00	1.00	1.00	1.00	1.00	1.00	1.00	1.00	1.00
PHF Volume:	34	1000	736	271	754	313	36	530	74	24	197	290
Reduct Vol:	0	0	0	0	0	0	0	0	0	0	0	0
Reduced Vol:	34	1000	736	271	754	313	36	530	74	24	197	290
PCE Adj:	1.00	1.00	1.00	1.00	1.00	1.00	1.00	1.00	1.00	1.00	1.00	1.00
MLF Adj:	1.00	1.00	1.00	1.00	1.00	1.00	1.00	1.00	1.00	1.00	1.00	1.00
FinalVolume:	34	1000	736	271	754	313	36	530	74	24	197	290
Saturation Flow Module:												
Sat/Lane:	1900	1900	1900	1900	1900	1900	1900	1900	1900	1900	1900	1900
Adjustment:	0.95	0.89	0.89	0.95	0.91	0.91	0.95	0.93	0.93	0.95	0.87	0.87
Lanes:	1.00	1.15	0.85	1.00	1.41	0.59	1.00	1.75	0.25	1.00	1.00	1.00
Final Sat.:	1805	1946	1433	1805	2439	1012	1805	3111	434	1805	1644	1644
Capacity Analysis Module:												
Vol/Sat:	0.02	0.51	0.51	0.15	0.31	0.31	0.02	0.17	0.17	0.01	0.12	0.18
Crit Moves:		****		****			****					****
Green/Cycle:	0.04	0.60	0.60	0.17	0.73	0.73	0.02	0.21	0.21	0.02	0.21	0.21
Volume/Cap:	0.42	0.86	0.86	0.86	0.42	0.42	0.86	0.80	0.80	0.80	0.58	0.86
Delay/Veh:	50.2	20.7	20.7	60.7	5.5	5.5	135.2	43.8	43.8	135.4	37.0	51.0
User DelAdj:	1.00	1.00	1.00	1.00	1.00	1.00	1.00	1.00	1.00	1.00	1.00	1.00
AdjDel/Veh:	50.2	20.7	20.7	60.7	5.5	5.5	135.2	43.8	43.8	135.4	37.0	51.0
LOS by Move:	D	C	C	E	A	A	F	D	D	F	D	D
HCM2kAvgQ:	2	26	26	11	7	7	3	12	12	2	7	12

Note: Queue reported is the number of cars per lane.

City of Murrieta General Plan
Future General Plan (Scenario B)
AM Peak Hour

Level Of Service Computation Report
2000 HCM Operations Method (Future Volume Alternative)

Intersection #16 Leon Road & Max Gillis Road

Cycle (sec): 100 Critical Vol./Cap.(X): 0.956
Loss Time (sec): 0 (Y+R=4.0 sec) Average Delay (sec/veh): 44.9
Optimal Cycle: 180 Level Of Service: D

Street Name:	Leon Road						Max Gillis Road					
Approach:	North Bound			South Bound			East Bound			West Bound		
Movement:	L -	T -	R	L -	T -	R	L -	T -	R	L -	T -	R
Control:	Protected			Protected			Protected			Protected		
Rights:	Include			Include			Include			Include		
Min. Green:	0	0	0	0	0	0	0	0	0	0	0	0
Lanes:	2	0 2	0 1	2	0 1	1 0	2	0 1	1 0	2	0 1	0 1
Volume Module:												
Base Vol:	418	119	422	345	302	130	107	477	716	561	293	184
Growth Adj:	1.00	1.00	1.00	1.00	1.00	1.00	1.00	1.00	1.00	1.00	1.00	1.00
Initial Bse:	418	119	422	345	302	130	107	477	716	561	293	184
Added Vol:	0	0	0	0	0	0	0	0	0	0	0	0
PasserByVol:	0	0	0	0	0	0	0	0	0	0	0	0
Initial Fut:	418	119	422	345	302	130	107	477	716	561	293	184
User Adj:	1.00	1.00	1.00	1.00	1.00	1.00	1.00	1.00	1.00	1.00	1.00	1.00
PHF Adj:	1.00	1.00	1.00	1.00	1.00	1.00	1.00	1.00	1.00	1.00	1.00	1.00
PHF Volume:	418	119	422	345	302	130	107	477	716	561	293	184
Reduct Vol:	0	0	0	0	0	0	0	0	0	0	0	0
Reduced Vol:	418	119	422	345	302	130	107	477	716	561	293	184
PCE Adj:	1.00	1.00	1.00	1.00	1.00	1.00	1.00	1.00	1.00	1.00	1.00	1.00
MLF Adj:	1.00	1.00	1.00	1.00	1.00	1.00	1.00	1.00	1.00	1.00	1.00	1.00
FinalVolume:	418	119	422	345	302	130	107	477	716	561	293	184
Saturation Flow Module:												
Sat/Lane:	1900	1900	1900	1900	1900	1900	1900	1900	1900	1900	1900	1900
Adjustment:	0.92	0.95	0.85	0.92	0.91	0.91	0.92	0.86	0.86	0.92	1.00	0.85
Lanes:	2.00	2.00	1.00	2.00	1.40	0.60	2.00	1.00	1.00	2.00	1.00	1.00
Final Sat.:	3502	3610	1615	3502	2410	1037	3502	1643	1643	3502	1900	1615
Capacity Analysis Module:												
Vol/Sat:	0.12	0.03	0.26	0.10	0.13	0.13	0.03	0.29	0.44	0.16	0.15	0.11
Crit Moves:			****	****					****	****		
Green/Cycle:	0.18	0.27	0.27	0.10	0.19	0.19	0.10	0.46	0.46	0.17	0.52	0.52
Volume/Cap:	0.65	0.12	0.96	0.96	0.65	0.65	0.30	0.64	0.96	0.96	0.30	0.22
Delay/Veh:	40.2	27.4	67.4	80.5	39.5	39.5	41.9	21.6	42.3	67.7	13.8	13.1
User DelAdj:	1.00	1.00	1.00	1.00	1.00	1.00	1.00	1.00	1.00	1.00	1.00	1.00
AdjDel/Veh:	40.2	27.4	67.4	80.5	39.5	39.5	41.9	21.6	42.3	67.7	13.8	13.1
LOS by Move:	D	C	E	F	D	D	D	C	D	E	B	B
HCM2kAvgQ:	7	1	18	9	8	8	2	12	28	13	5	3

Note: Queue reported is the number of cars per lane.

City of Murrieta General Plan
Future General Plan (Scenario B)
AM Peak Hour

Level Of Service Computation Report
2000 HCM Operations Method (Future Volume Alternative)

Intersection #17 Winchester Road - SR-79 & Max Gillis - Thompson

Cycle (sec): 100 Critical Vol./Cap.(X): 0.786
Loss Time (sec): 0 (Y+R=4.0 sec) Average Delay (sec/veh): 26.2
Optimal Cycle: 107 Level Of Service: C

Street Name:	Winchester Road - SR-79						Max Gillis - Thompson					
Approach:	North Bound			South Bound			East Bound			West Bound		
Movement:	L -	T -	R	L -	T -	R	L -	T -	R	L -	T -	R
Control:	Protected			Protected			Protected			Protected		
Rights:	Include			Include			Include			Include		
Min. Green:	0	0	0	0	0	0	0	0	0	0	0	0
Lanes:	1	0 2	1 0	1	0 3	0 1	2	0 2	0 1	1	0 1	1 0
Volume Module:												
Base Vol:	176	1324	43	136	2163	666	624	155	266	32	287	44
Growth Adj:	1.00	1.00	1.00	1.00	1.00	1.00	1.00	1.00	1.00	1.00	1.00	1.00
Initial Bse:	176	1324	43	136	2163	666	624	155	266	32	287	44
Added Vol:	0	0	0	0	0	0	0	0	0	0	0	0
PasserByVol:	0	0	0	0	0	0	0	0	0	0	0	0
Initial Fut:	176	1324	43	136	2163	666	624	155	266	32	287	44
User Adj:	1.00	1.00	1.00	1.00	1.00	1.00	1.00	1.00	1.00	1.00	1.00	1.00
PHF Adj:	1.00	1.00	1.00	1.00	1.00	1.00	1.00	1.00	1.00	1.00	1.00	1.00
PHF Volume:	176	1324	43	136	2163	666	624	155	266	32	287	44
Reduct Vol:	0	0	0	0	0	0	0	0	0	0	0	0
Reduced Vol:	176	1324	43	136	2163	666	624	155	266	32	287	44
PCE Adj:	1.00	1.00	1.00	1.00	1.00	1.00	1.00	1.00	1.00	1.00	1.00	1.00
MLF Adj:	1.00	1.00	1.00	1.00	1.00	1.00	1.00	1.00	1.00	1.00	1.00	1.00
FinalVolume:	176	1324	43	136	2163	666	624	155	266	32	287	44
Saturation Flow Module:												
Sat/Lane:	1900	1900	1900	1900	1900	1900	1900	1900	1900	1900	1900	1900
Adjustment:	0.95	0.91	0.91	0.95	0.91	0.85	0.92	0.95	0.85	0.95	0.93	0.93
Lanes:	1.00	2.91	0.09	1.00	3.00	1.00	2.00	2.00	1.00	1.00	1.73	0.27
Final Sat.:	1805	4999	162	1805	5187	1615	3502	3610	1615	1805	3068	470
Capacity Analysis Module:												
Vol/Sat:	0.10	0.26	0.26	0.08	0.42	0.41	0.18	0.04	0.16	0.02	0.09	0.09
Crit Moves:	****				****		****				****	
Green/Cycle:	0.12	0.51	0.51	0.14	0.53	0.53	0.23	0.31	0.31	0.03	0.12	0.12
Volume/Cap:	0.79	0.52	0.52	0.52	0.79	0.78	0.79	0.14	0.53	0.53	0.79	0.79
Delay/Veh:	59.2	16.6	16.6	41.4	20.5	23.3	41.6	24.8	29.4	56.0	52.3	52.3
User DelAdj:	1.00	1.00	1.00	1.00	1.00	1.00	1.00	1.00	1.00	1.00	1.00	1.00
AdjDel/Veh:	59.2	16.6	16.6	41.4	20.5	23.3	41.6	24.8	29.4	56.0	52.3	52.3
LOS by Move:	E	B	B	D	C	C	D	C	C	E	D	D
HCM2kAvgQ:	7	10	10	5	21	18	11	2	7	2	7	7

Note: Queue reported is the number of cars per lane.

City of Murrieta General Plan
Future General Plan (Scenario B)
AM Peak Hour

Level Of Service Computation Report
2000 HCM Operations Method (Future Volume Alternative)

Intersection #18 California Oaks Road & Clinton Keith Road

Cycle (sec): 100 | Critical Vol./Cap.(X): 1.158
Loss Time (sec): 0 (Y+R=4.0 sec) | Average Delay (sec/veh): 67.3
Optimal Cycle: 180 | Level Of Service: E

Street Name:	California Oaks Road						Clinton Keith Road					
Approach:	North Bound			South Bound			East Bound			West Bound		
Movement:	L	T	R	L	T	R	L	T	R	L	T	R
Control:	Protected			Protected			Protected			Protected		
Rights:	Ovl			Include			Include			Include		
Min. Green:	0	0	0	0	0	0	0	0	0	0	0	0
Lanes:	1 0	0 0	2	0 0	0 0	0 0	0 0	2 1	0	1 0	3 0	0
Volume Module:												
Base Vol:	184	0	611	0	0	0	0	2451	297	934	1886	0
Growth Adj:	1.00	1.00	1.00	1.00	1.00	1.00	1.00	1.00	1.00	1.00	1.00	1.00
Initial Bse:	184	0	611	0	0	0	0	2451	297	934	1886	0
Added Vol:	0	0	0	0	0	0	0	0	0	0	0	0
PasserByVol:	0	0	0	0	0	0	0	0	0	0	0	0
Initial Fut:	184	0	611	0	0	0	0	2451	297	934	1886	0
User Adj:	1.00	1.00	1.00	1.00	1.00	1.00	1.00	1.00	1.00	1.00	1.00	1.00
PHF Adj:	1.00	1.00	1.00	1.00	1.00	1.00	1.00	1.00	1.00	1.00	1.00	1.00
PHF Volume:	184	0	611	0	0	0	0	2451	297	934	1886	0
Reduct Vol:	0	0	0	0	0	0	0	0	0	0	0	0
Reduced Vol:	184	0	611	0	0	0	0	2451	297	934	1886	0
PCE Adj:	1.00	1.00	1.00	1.00	1.00	1.00	1.00	1.00	1.00	1.00	1.00	1.00
MLF Adj:	1.00	1.00	1.00	1.00	1.00	1.00	1.00	1.00	1.00	1.00	1.00	1.00
FinalVolume:	184	0	611	0	0	0	0	2451	297	934	1886	0
Saturation Flow Module:												
Sat/Lane:	1900	1900	1900	1900	1900	1900	1900	1900	1900	1900	1900	1900
Adjustment:	0.95	1.00	0.75	1.00	1.00	1.00	1.00	0.90	0.90	0.95	0.91	1.00
Lanes:	1.00	0.00	2.00	0.00	0.00	0.00	0.00	2.68	0.32	1.00	3.00	0.00
Final Sat.:	1805	0	2842	0	0	0	0	4552	552	1805	5187	0
Capacity Analysis Module:												
Vol/Sat:	0.10	0.00	0.21	0.00	0.00	0.00	0.00	0.54	0.54	0.52	0.36	0.00
Crit Moves:	****							****		****		
Green/Cycle:	0.09	0.00	0.53	0.00	0.00	0.00	0.00	0.47	0.47	0.45	0.91	0.00
Volume/Cap:	1.16	0.00	0.40	0.00	0.00	0.00	0.00	1.16	1.16	1.16	0.40	0.00
Delay/Veh:	165.7	0.0	13.9	0.0	0.0	0.0	0.0	103	102.9	112.4	0.7	0.0
User DelAdj:	1.00	1.00	1.00	1.00	1.00	1.00	1.00	1.00	1.00	1.00	1.00	1.00
AdjDel/Veh:	165.7	0.0	13.9	0.0	0.0	0.0	0.0	103	102.9	112.4	0.7	0.0
LOS by Move:	F	A	B	A	A	A	A	F	F	F	A	A
HCM2kAvgQ:	12	0	6	0	0	0	0	51	51	47	3	0

Note: Queue reported is the number of cars per lane.

City of Murrieta General Plan
Future General Plan (Scenario B)
AM Peak Hour

Level Of Service Computation Report
2000 HCM Operations Method (Future Volume Alternative)

Intersection #19 I-215 SB Off-Ramp & Clinton Keith Road

Cycle (sec): 100 | Critical Vol./Cap.(X): 0.642
Loss Time (sec): 0 (Y+R=4.0 sec) | Average Delay (sec/veh): 7.7
Optimal Cycle: 64 | Level Of Service: A

Street Name:	I-215 SB Off-Ramp						Clinton Keith Road					
Approach:	North Bound			South Bound			East Bound			West Bound		
Movement:	L	T	R	L	T	R	L	T	R	L	T	R
Control:	Split Phase			Split Phase			Protected			Protected		
Rights:	Include			Include			Include			Ignore		
Min. Green:	0	0	0	0	0	0	0	0	0	0	0	0
Lanes:	0 0	0 0	0	0 1	0 0	2	0 0	3 0	1	0 0	3 0	1
Volume Module:												
Base Vol:	0	0	0	54	0	424	0	2554	631	0	1998	240
Growth Adj:	1.00	1.00	1.00	1.00	1.00	1.00	1.00	1.00	1.00	1.00	1.00	1.00
Initial Bse:	0	0	0	54	0	424	0	2554	631	0	1998	240
Added Vol:	0	0	0	0	0	0	0	0	0	0	0	0
PasserByVol:	0	0	0	0	0	0	0	0	0	0	0	0
Initial Fut:	0	0	0	54	0	424	0	2554	631	0	1998	240
User Adj:	1.00	1.00	1.00	1.00	1.00	1.00	1.00	1.00	1.00	1.00	1.00	0.00
PHF Adj:	1.00	1.00	1.00	1.00	1.00	1.00	1.00	1.00	1.00	1.00	1.00	0.00
PHF Volume:	0	0	0	54	0	424	0	2554	631	0	1998	0
Reduct Vol:	0	0	0	0	0	0	0	0	0	0	0	0
Reduced Vol:	0	0	0	54	0	424	0	2554	631	0	1998	0
PCE Adj:	1.00	1.00	1.00	1.00	1.00	1.00	1.00	1.00	1.00	1.00	1.00	0.00
MLF Adj:	1.00	1.00	1.00	1.00	1.00	1.00	1.00	1.00	1.00	1.00	1.00	0.00
FinalVolume:	0	0	0	54	0	424	0	2554	631	0	1998	0
Saturation Flow Module:												
Sat/Lane:	1900	1900	1900	1900	1900	1900	1900	1900	1900	1900	1900	1900
Adjustment:	1.00	1.00	1.00	0.95	1.00	0.75	1.00	0.91	0.85	1.00	0.91	1.00
Lanes:	0.00	0.00	0.00	1.00	0.00	2.00	0.00	3.00	1.00	0.00	3.00	1.00
Final Sat.:	0	0	0	1809	0	2842	0	5187	1615	0	5187	1900
Capacity Analysis Module:												
Vol/Sat:	0.00	0.00	0.00	0.03	0.00	0.15	0.00	0.49	0.39	0.00	0.39	0.00
Crit Moves:						****		****		****		
Green/Cycle:	0.00	0.00	0.00	0.23	0.00	0.23	0.00	0.77	0.77	0.00	0.77	0.00
Volume/Cap:	0.00	0.00	0.00	0.13	0.00	0.64	0.00	0.64	0.51	0.00	0.50	0.00
Delay/Veh:	0.0	0.0	0.0	30.5	0.0	36.8	0.0	5.7	4.8	0.0	4.5	0.0
User DelAdj:	1.00	1.00	1.00	1.00	1.00	1.00	1.00	1.00	1.00	1.00	1.00	1.00
AdjDel/Veh:	0.0	0.0	0.0	30.5	0.0	36.8	0.0	5.7	4.8	0.0	4.5	0.0
LOS by Move:	A	A	A	C	A	D	A	A	A	A	A	A
HCM2kAvgQ:	0	0	0	1	0	8	0	14	8	0	9	0

Note: Queue reported is the number of cars per lane.

City of Murrieta General Plan
Future General Plan (Scenario B)
AM Peak Hour

Level Of Service Computation Report
2000 HCM Operations Method (Future Volume Alternative)

Intersection #20 I-215 NB Off Ramp & Clinton Keith Road

Cycle (sec): 100 | Critical Vol./Cap.(X): 1.286
Loss Time (sec): 0 (Y+R=4.0 sec) | Average Delay (sec/veh): 116.7
Optimal Cycle: 180 | Level Of Service: F

Street Name:	I-215 NB Off Ramp						Clinton Keith Road					
Approach:	North Bound			South Bound			East Bound			West Bound		
Movement:	L	T	R	L	T	R	L	T	R	L	T	R
Control:	Split Phase			Split Phase			Protected			Protected		
Rights:	Include			Include			Include			Ignore		
Min. Green:	0	0	0	0	0	0	0	0	0	0	0	0
Lanes:	1 0	0 0	1	0 0	0 0	0	0 0	3 0	1	0 0	3 0	1
Volume Module:												
Base Vol:	127	0	1354	0	0	0	0	1756	300	0	2320	267
Growth Adj:	1.00	1.00	1.00	1.00	1.00	1.00	1.00	1.00	1.00	1.00	1.00	1.00
Initial Bse:	127	0	1354	0	0	0	0	1756	300	0	2320	267
Added Vol:	0	0	0	0	0	0	0	0	0	0	0	0
PasserByVol:	0	0	0	0	0	0	0	0	0	0	0	0
Initial Fut:	127	0	1354	0	0	0	0	1756	300	0	2320	267
User Adj:	1.00	1.00	1.00	1.00	1.00	1.00	1.00	1.00	1.00	1.00	1.00	0.00
PHF Adj:	1.00	1.00	1.00	1.00	1.00	1.00	1.00	1.00	1.00	1.00	1.00	0.00
PHF Volume:	127	0	1354	0	0	0	0	1756	300	0	2320	0
Reduct Vol:	0	0	0	0	0	0	0	0	0	0	0	0
Reduced Vol:	127	0	1354	0	0	0	0	1756	300	0	2320	0
PCE Adj:	1.00	1.00	1.00	1.00	1.00	1.00	1.00	1.00	1.00	1.00	1.00	0.00
MLF Adj:	1.00	1.00	1.00	1.00	1.00	1.00	1.00	1.00	1.00	1.00	1.00	0.00
FinalVolume:	127	0	1354	0	0	0	0	1756	300	0	2320	0
Saturation Flow Module:												
Sat/Lane:	1900	1900	1900	1900	1900	1900	1900	1900	1900	1900	1900	1900
Adjustment:	0.95	1.00	0.85	1.00	1.00	1.00	1.00	0.91	0.85	1.00	0.91	1.00
Lanes:	1.00	0.00	1.00	0.00	0.00	0.00	0.00	3.00	1.00	0.00	3.00	1.00
Final Sat.:	1805	0	1615	0	0	0	0	5187	1615	0	5187	1900
Capacity Analysis Module:												
Vol/Sat:	0.07	0.00	0.84	0.00	0.00	0.00	0.00	0.34	0.19	0.00	0.45	0.00
Crit Moves:			****				****				****	
Green/Cycle:	0.65	0.00	0.65	0.00	0.00	0.00	0.00	0.35	0.35	0.00	0.35	0.00
Volume/Cap:	0.11	0.00	1.29	0.00	0.00	0.00	0.00	0.97	0.53	0.00	1.29	0.00
Delay/Veh:	6.6	0.0	153.2	0.0	0.0	0.0	0.0	47.4	27.1	0.0	165	0.0
User DelAdj:	1.00	1.00	1.00	1.00	1.00	1.00	1.00	1.00	1.00	1.00	1.00	1.00
AdjDel/Veh:	6.6	0.0	153.2	0.0	0.0	0.0	0.0	47.4	27.1	0.0	165	0.0
LOS by Move:	A	A	F	A	A	A	A	D	C	A	F	A
HCM2kAvgQ:	1	0	79	0	0	0	0	26	8	0	51	0

Note: Queue reported is the number of cars per lane.

City of Murrieta General Plan
Future General Plan (Scenario B)
AM Peak Hour

Level Of Service Computation Report
2000 HCM Operations Method (Future Volume Alternative)

Intersection #21 Antelope Road & Clinton Keith Road

Cycle (sec): 100 | Critical Vol./Cap.(X): 0.482
Loss Time (sec): 0 (Y+R=4.0 sec) | Average Delay (sec/veh): 5.4
Optimal Cycle: 44 | Level Of Service: A

Street Name:	Antelope Road						Clinton Keith Road					
Approach:	North Bound			South Bound			East Bound			West Bound		
Movement:	L	T	R	L	T	R	L	T	R	L	T	R
Control:	Protected			Protected			Protected			Protected		
Rights:	Include			Ignore			Include			Include		
Min. Green:	0	0	0	0	0	0	0	0	0	0	0	0
Lanes:	0 0	0 0	0	2 0	0 0	2	2 0	3 0	0	0 0	2 1	0
Volume Module:												
Base Vol:	0	0	0	17	0	550	402	1797	0	0	1587	274
Growth Adj:	1.00	1.00	1.00	1.00	1.00	1.00	1.00	1.00	1.00	1.00	1.00	1.00
Initial Bse:	0	0	0	17	0	550	402	1797	0	0	1587	274
Added Vol:	0	0	0	0	0	0	0	0	0	0	0	0
PasserByVol:	0	0	0	0	0	0	0	0	0	0	0	0
Initial Fut:	0	0	0	17	0	550	402	1797	0	0	1587	274
User Adj:	1.00	1.00	1.00	1.00	1.00	0.00	1.00	1.00	1.00	1.00	1.00	1.00
PHF Adj:	1.00	1.00	1.00	1.00	1.00	0.00	1.00	1.00	1.00	1.00	1.00	1.00
PHF Volume:	0	0	0	17	0	0	402	1797	0	0	1587	274
Reduct Vol:	0	0	0	0	0	0	0	0	0	0	0	0
Reduced Vol:	0	0	0	17	0	0	402	1797	0	0	1587	274
PCE Adj:	1.00	1.00	1.00	1.00	1.00	0.00	1.00	1.00	1.00	1.00	1.00	1.00
MLF Adj:	1.00	1.00	1.00	1.00	1.00	0.00	1.00	1.00	1.00	1.00	1.00	1.00
FinalVolume:	0	0	0	17	0	0	402	1797	0	0	1587	274
Saturation Flow Module:												
Sat/Lane:	1900	1900	1900	1900	1900	1900	1900	1900	1900	1900	1900	1900
Adjustment:	1.00	1.00	1.00	0.92	1.00	0.88	0.92	0.91	1.00	1.00	0.89	0.89
Lanes:	0.00	0.00	0.00	2.00	0.00	2.00	2.00	3.00	0.00	0.00	2.56	0.44
Final Sat.:	0	0	0	3502	0	3344	3502	5187	0	0	4326	747
Capacity Analysis Module:												
Vol/Sat:	0.00	0.00	0.00	0.00	0.00	0.00	0.11	0.35	0.00	0.00	0.37	0.37
Crit Moves:					****		****				****	
Green/Cycle:	0.00	0.00	0.00	0.00	0.00	0.00	0.24	1.00	0.00	0.00	0.76	0.76
Volume/Cap:	0.00	0.00	0.00	xxxx	0.00	0.00	0.48	0.35	0.00	0.00	0.48	0.48
Delay/Veh:	0.0	0.0	0.0	0.0	0.0	0.0	33.2	0.0	0.0	0.0	4.6	4.6
User DelAdj:	1.00	1.00	1.00	1.00	1.00	1.00	1.00	1.00	1.00	1.00	1.00	1.00
AdjDel/Veh:	0.0	0.0	0.0	0.0	0.0	0.0	33.2	0.0	0.0	0.0	4.6	4.6
LOS by Move:	A	A	A	A	A	A	C	A	A	A	A	A
HCM2kAvgQ:	0	0	0	0	0	0	6	1	0	0	8	8

Note: Queue reported is the number of cars per lane.

City of Murrieta General Plan
Future General Plan (Scenario B)
AM Peak Hour

Level Of Service Computation Report
2000 HCM Operations Method (Future Volume Alternative)

Intersection #23 Liberty Road & Clinton Keith Road

Cycle (sec): 100 Critical Vol./Cap.(X): 0.467
Loss Time (sec): 0 (Y+R=4.0 sec) Average Delay (sec/veh): 2.0
Optimal Cycle: 43 Level Of Service: A

Street Name:	Liberty Road						Clinton Keith Road					
Approach:	North Bound			South Bound			East Bound			West Bound		
Movement:	L	T	R	L	T	R	L	T	R	L	T	R
Control:	Protected			Protected			Protected			Protected		
Rights:	Include			Include			Include			Include		
Min. Green:	0	0	0	0	0	0	0	0	0	0	0	0
Lanes:	2 0	0 0	1	0 0	0 0	0	0 0	2 1	0	1 0	3 0	0
Volume Module:												
Base Vol:	12	0	59	0	0	0	0	1960	151	34	2224	0
Growth Adj:	1.00	1.00	1.00	1.00	1.00	1.00	1.00	1.00	1.00	1.00	1.00	1.00
Initial Bse:	12	0	59	0	0	0	0	1960	151	34	2224	0
Added Vol:	0	0	0	0	0	0	0	0	0	0	0	0
PasserByVol:	0	0	0	0	0	0	0	0	0	0	0	0
Initial Fut:	12	0	59	0	0	0	0	1960	151	34	2224	0
User Adj:	1.00	1.00	1.00	1.00	1.00	1.00	1.00	1.00	1.00	1.00	1.00	1.00
PHF Adj:	1.00	1.00	1.00	1.00	1.00	1.00	1.00	1.00	1.00	1.00	1.00	1.00
PHF Volume:	12	0	59	0	0	0	0	1960	151	34	2224	0
Reduct Vol:	0	0	0	0	0	0	0	0	0	0	0	0
Reduced Vol:	12	0	59	0	0	0	0	1960	151	34	2224	0
PCE Adj:	1.00	1.00	1.00	1.00	1.00	1.00	1.00	1.00	1.00	1.00	1.00	1.00
MLF Adj:	1.00	1.00	1.00	1.00	1.00	1.00	1.00	1.00	1.00	1.00	1.00	1.00
FinalVolume:	12	0	59	0	0	0	0	1960	151	34	2224	0
Saturation Flow Module:												
Sat/Lane:	1900	1900	1900	1900	1900	1900	1900	1900	1900	1900	1900	1900
Adjustment:	0.92	1.00	0.85	1.00	1.00	1.00	1.00	0.90	0.90	0.95	0.91	1.00
Lanes:	2.00	0.00	1.00	0.00	0.00	0.00	0.00	2.79	0.21	1.00	3.00	0.00
Final Sat.:	3502	0	1615	0	0	0	0	4763	367	1805	5187	0
Capacity Analysis Module:												
Vol/Sat:	0.00	0.00	0.04	0.00	0.00	0.00	0.00	0.41	0.41	0.02	0.43	0.00
Crit Moves:			****					****		****		
Green/Cycle:	0.08	0.00	0.08	0.00	0.00	0.00	0.00	0.88	0.88	0.04	0.92	0.00
Volume/Cap:	0.04	0.00	0.47	0.00	0.00	0.00	0.00	0.47	0.47	0.47	0.47	0.00
Delay/Veh:	42.7	0.0	46.8	0.0	0.0	0.0	0.0	1.3	1.3	51.6	0.6	0.0
User DelAdj:	1.00	1.00	1.00	1.00	1.00	1.00	1.00	1.00	1.00	1.00	1.00	1.00
AdjDel/Veh:	42.7	0.0	46.8	0.0	0.0	0.0	0.0	1.3	1.3	51.6	0.6	0.0
LOS by Move:	D	A	D	A	A	A	A	A	A	D	A	A
HCM2kAvgQ:	0	0	2	0	0	0	0	5	5	2	4	0

Note: Queue reported is the number of cars per lane.

City of Murrieta General Plan
Future General Plan (Scenario B)
AM Peak Hour

Level Of Service Computation Report
2000 HCM Operations Method (Future Volume Alternative)

Intersection #24 Leon Road & Clinton Keith Road

Cycle (sec): 100 Critical Vol./Cap.(X): 0.825
Loss Time (sec): 0 (Y+R=4.0 sec) Average Delay (sec/veh): 22.2
Optimal Cycle: 131 Level Of Service: C

Street Name:	Leon Road						Clinton Keith Road					
Approach:	North Bound			South Bound			East Bound			West Bound		
Movement:	L	T	R	L	T	R	L	T	R	L	T	R
Control:	Protected			Protected			Protected			Protected		
Rights:	Include			Ovl			Include			Include		
Min. Green:	0	0	0	0	0	0	0	0	0	0	0	0
Lanes:	0 0	0 0	0	1 0	0 0	2	2 0	3 0	0	0 0	3 0	1
Volume Module:												
Base Vol:	0	0	0	162	0	1329	415	1595	0	0	727	578
Growth Adj:	1.00	1.00	1.00	1.00	1.00	1.00	1.00	1.00	1.00	1.00	1.00	1.00
Initial Bse:	0	0	0	162	0	1329	415	1595	0	0	727	578
Added Vol:	0	0	0	0	0	0	0	0	0	0	0	0
PasserByVol:	0	0	0	0	0	0	0	0	0	0	0	0
Initial Fut:	0	0	0	162	0	1329	415	1595	0	0	727	578
User Adj:	1.00	1.00	1.00	1.00	1.00	1.00	1.00	1.00	1.00	1.00	1.00	1.00
PHF Adj:	1.00	1.00	1.00	1.00	1.00	1.00	1.00	1.00	1.00	1.00	1.00	1.00
PHF Volume:	0	0	0	162	0	1329	415	1595	0	0	727	578
Reduct Vol:	0	0	0	0	0	0	0	0	0	0	0	0
Reduced Vol:	0	0	0	162	0	1329	415	1595	0	0	727	578
PCE Adj:	1.00	1.00	1.00	1.00	1.00	1.00	1.00	1.00	1.00	1.00	1.00	1.00
MLF Adj:	1.00	1.00	1.00	1.00	1.00	1.00	1.00	1.00	1.00	1.00	1.00	1.00
FinalVolume:	0	0	0	162	0	1329	415	1595	0	0	727	578
Saturation Flow Module:												
Sat/Lane:	1900	1900	1900	1900	1900	1900	1900	1900	1900	1900	1900	1900
Adjustment:	1.00	1.00	1.00	0.95	1.00	0.75	0.92	0.91	1.00	1.00	0.91	0.85
Lanes:	0.00	0.00	0.00	1.00	0.00	2.00	2.00	3.00	0.00	0.00	3.00	1.00
Final Sat.:	0	0	0	1805	0	2842	3502	5187	0	0	5187	1615
Capacity Analysis Module:												
Vol/Sat:	0.00	0.00	0.00	0.09	0.00	0.47	0.12	0.31	0.00	0.00	0.14	0.36
Crit Moves:						****	****					****
Green/Cycle:	0.00	0.00	0.00	0.42	0.00	0.57	0.14	0.58	0.00	0.00	0.43	0.43
Volume/Cap:	0.00	0.00	0.00	0.21	0.00	0.83	0.83	0.53	0.00	0.00	0.32	0.83
Delay/Veh:	0.0	0.0	0.0	18.4	0.0	21.3	52.3	13.1	0.0	0.0	18.7	32.9
User DelAdj:	1.00	1.00	1.00	1.00	1.00	1.00	1.00	1.00	1.00	1.00	1.00	1.00
AdjDel/Veh:	0.0	0.0	0.0	18.4	0.0	21.3	52.3	13.1	0.0	0.0	18.7	32.9
LOS by Move:	A	A	A	B	A	C	D	B	A	A	B	C
HCM2kAvgQ:	0	0	0	3	0	21	9	11	0	0	5	18

Note: Queue reported is the number of cars per lane.

City of Murrieta General Plan
Future General Plan (Scenario B)
AM Peak Hour

Level Of Service Computation Report
2000 HCM Operations Method (Future Volume Alternative)

Intersection #25 Winchester Road - SR-79 & Benton Road

Cycle (sec): 100 | Critical Vol./Cap.(X): 1.006
Loss Time (sec): 0 (Y+R=4.0 sec) | Average Delay (sec/veh): 43.3
Optimal Cycle: 180 | Level Of Service: D

Street Name:	Winchester Road - SR-79						Benton Road					
Approach:	North Bound			South Bound			East Bound			West Bound		
Movement:	L	T	R	L	T	R	L	T	R	L	T	R
Control:	Protected			Protected			Protected			Protected		
Rights:	Include			Include			Include			Include		
Min. Green:	0	0	0	0	0	0	0	0	0	0	0	0
Lanes:	2	0 3	0 1	2	0 3	0 1	2	0 2	0 2	2	0 2	0 1
Volume Module:												
Base Vol:	458	1368	362	95	2018	376	44	533	1108	338	572	32
Growth Adj:	1.00	1.00	1.00	1.00	1.00	1.00	1.00	1.00	1.00	1.00	1.00	1.00
Initial Bse:	458	1368	362	95	2018	376	44	533	1108	338	572	32
Added Vol:	0	0	0	0	0	0	0	0	0	0	0	0
PasserByVol:	0	0	0	0	0	0	0	0	0	0	0	0
Initial Fut:	458	1368	362	95	2018	376	44	533	1108	338	572	32
User Adj:	1.00	1.00	1.00	1.00	1.00	1.00	1.00	1.00	1.00	1.00	1.00	1.00
PHF Adj:	1.00	1.00	1.00	1.00	1.00	1.00	1.00	1.00	1.00	1.00	1.00	1.00
PHF Volume:	458	1368	362	95	2018	376	44	533	1108	338	572	32
Reduct Vol:	0	0	0	0	0	0	0	0	0	0	0	0
Reduced Vol:	458	1368	362	95	2018	376	44	533	1108	338	572	32
PCE Adj:	1.00	1.00	1.00	1.00	1.00	1.00	1.00	1.00	1.00	1.00	1.00	1.00
MLF Adj:	1.00	1.00	1.00	1.00	1.00	1.00	1.00	1.00	1.00	1.00	1.00	1.00
FinalVolume:	458	1368	362	95	2018	376	44	533	1108	338	572	32
Saturation Flow Module:												
Sat/Lane:	1900	1900	1900	1900	1900	1900	1900	1900	1900	1900	1900	1900
Adjustment:	0.92	0.91	0.85	0.92	0.91	0.85	0.92	0.95	0.75	0.92	0.95	0.85
Lanes:	2.00	3.00	1.00	2.00	3.00	1.00	2.00	2.00	2.00	2.00	2.00	1.00
Final Sat.:	3502	5187	1615	3502	5187	1615	3502	3610	2842	3502	3610	1615
Capacity Analysis Module:												
Vol/Sat:	0.13	0.26	0.22	0.03	0.39	0.23	0.01	0.15	0.39	0.10	0.16	0.02
Crit Moves:	****				****				****	****		
Green/Cycle:	0.13	0.47	0.47	0.05	0.39	0.39	0.04	0.39	0.39	0.10	0.45	0.45
Volume/Cap:	1.01	0.56	0.48	0.56	1.01	0.60	0.35	0.38	1.01	1.01	0.35	0.04
Delay/Veh:	87.2	19.5	18.7	50.9	52.3	26.2	48.8	22.2	59.3	95.9	18.2	15.6
User DelAdj:	1.00	1.00	1.00	1.00	1.00	1.00	1.00	1.00	1.00	1.00	1.00	1.00
AdjDel/Veh:	87.2	19.5	18.7	50.9	52.3	26.2	48.8	22.2	59.3	95.9	18.2	15.6
LOS by Move:	F	B	B	D	D	C	D	C	E	F	B	B
HCM2kAvgQ:	12	11	8	2	30	10	1	6	27	10	6	1

Note: Queue reported is the number of cars per lane.

City of Murrieta General Plan
Future General Plan (Scenario B)
AM Peak Hour

Level Of Service Computation Report
2000 HCM Operations Method (Future Volume Alternative)

Intersection #26 Winchester Road - SR-79 & Via Mira Mosa

Cycle (sec): 100 | Critical Vol./Cap.(X): 0.895
Loss Time (sec): 0 (Y+R=4.0 sec) | Average Delay (sec/veh): 24.3
Optimal Cycle: 180 | Level Of Service: C

Street Name:	Winchester Road - SR-79						Via Mira Mosa					
Approach:	North Bound			South Bound			East Bound			West Bound		
Movement:	L	T	R	L	T	R	L	T	R	L	T	R
Control:	Protected			Protected			Protected			Protected		
Rights:	Include			Include			Include			Include		
Min. Green:	0	0	0	0	0	0	0	0	0	0	0	0
Lanes:	1	0 2	1 0	1	0 2	1 0	1	0 0	1 0	1	0 0	1 0
Volume Module:												
Base Vol:	27	1638	783	317	2745	234	362	47	91	176	19	31
Growth Adj:	1.00	1.00	1.00	1.00	1.00	1.00	1.00	1.00	1.00	1.00	1.00	1.00
Initial Bse:	27	1638	783	317	2745	234	362	47	91	176	19	31
Added Vol:	0	0	0	0	0	0	0	0	0	0	0	0
PasserByVol:	0	0	0	0	0	0	0	0	0	0	0	0
Initial Fut:	27	1638	783	317	2745	234	362	47	91	176	19	31
User Adj:	1.00	1.00	1.00	1.00	1.00	1.00	1.00	1.00	1.00	1.00	1.00	1.00
PHF Adj:	1.00	1.00	1.00	1.00	1.00	1.00	1.00	1.00	1.00	1.00	1.00	1.00
PHF Volume:	27	1638	783	317	2745	234	362	47	91	176	19	31
Reduct Vol:	0	0	0	0	0	0	0	0	0	0	0	0
Reduced Vol:	27	1638	783	317	2745	234	362	47	91	176	19	31
PCE Adj:	1.00	1.00	1.00	1.00	1.00	1.00	1.00	1.00	1.00	1.00	1.00	1.00
MLF Adj:	1.00	1.00	1.00	1.00	1.00	1.00	1.00	1.00	1.00	1.00	1.00	1.00
FinalVolume:	27	1638	783	317	2745	234	362	47	91	176	19	31
Saturation Flow Module:												
Sat/Lane:	1900	1900	1900	1900	1900	1900	1900	1900	1900	1900	1900	1900
Adjustment:	0.95	0.87	0.87	0.95	0.90	0.90	0.95	0.90	0.90	0.95	0.91	0.91
Lanes:	1.00	2.03	0.97	1.00	2.76	0.24	1.00	0.34	0.66	1.00	0.38	0.62
Final Sat.:	1805	3341	1597	1805	4722	403	1805	583	1129	1805	655	1068
Capacity Analysis Module:												
Vol/Sat:	0.01	0.49	0.49	0.18	0.58	0.58	0.20	0.08	0.08	0.10	0.03	0.03
Crit Moves:		****		****			****				****	
Green/Cycle:	0.02	0.55	0.55	0.20	0.72	0.72	0.22	0.12	0.12	0.14	0.03	0.03
Volume/Cap:	0.80	0.90	0.90	0.90	0.80	0.80	0.90	0.69	0.69	0.69	0.90	0.90
Delay/Veh:	127.4	24.4	24.4	63.2	10.4	10.4	59.4	52.7	52.7	49.1	131	131.3
User DelAdj:	1.00	1.00	1.00	1.00	1.00	1.00	1.00	1.00	1.00	1.00	1.00	1.00
AdjDel/Veh:	127.4	24.4	24.4	63.2	10.4	10.4	59.4	52.7	52.7	49.1	131	131.3
LOS by Move:	F	C	C	E	B	B	E	D	D	D	F	F
HCM2kAvgQ:	2	28	28	13	24	24	14	6	6	7	4	4

Note: Queue reported is the number of cars per lane.

City of Murrieta General Plan
Future General Plan (Scenario B)
AM Peak Hour

Level Of Service Computation Report
2000 HCM Operations Method (Future Volume Alternative)

Intersection #27 Monroe Ave & Los Alamos

Cycle (sec): 100 | Critical Vol./Cap.(X): 0.595
Loss Time (sec): 0 (Y+R=4.0 sec) | Average Delay (sec/veh): 24.5
Optimal Cycle: 56 | Level Of Service: C

Street Name:	Monroe Ave						Los Alamos					
Approach:	North Bound			South Bound			East Bound			West Bound		
Movement:	L -	T -	R	L -	T -	R	L -	T -	R	L -	T -	R
Control:	Protected			Protected			Protected			Protected		
Rights:	Include			Include			Include			Include		
Min. Green:	0	0	0	0	0	0	0	0	0	0	0	0
Lanes:	1 0	1	1 0	2 0	2	0 1	1 0	1	1 0	1 0	2	0 1
Volume Module:												
Base Vol:	29	223	187	562	483	213	45	337	132	64	1008	465
Growth Adj:	1.00	1.00	1.00	1.00	1.00	1.00	1.00	1.00	1.00	1.00	1.00	1.00
Initial Bse:	29	223	187	562	483	213	45	337	132	64	1008	465
Added Vol:	0	0	0	0	0	0	0	0	0	0	0	0
PasserByVol:	0	0	0	0	0	0	0	0	0	0	0	0
Initial Fut:	29	223	187	562	483	213	45	337	132	64	1008	465
User Adj:	1.00	1.00	1.00	1.00	1.00	1.00	1.00	1.00	1.00	1.00	1.00	1.00
PHF Adj:	1.00	1.00	1.00	1.00	1.00	1.00	1.00	1.00	1.00	1.00	1.00	1.00
PHF Volume:	29	223	187	562	483	213	45	337	132	64	1008	465
Reduct Vol:	0	0	0	0	0	0	0	0	0	0	0	0
Reduced Vol:	29	223	187	562	483	213	45	337	132	64	1008	465
PCE Adj:	1.00	1.00	1.00	1.00	1.00	1.00	1.00	1.00	1.00	1.00	1.00	1.00
MLF Adj:	1.00	1.00	1.00	1.00	1.00	1.00	1.00	1.00	1.00	1.00	1.00	1.00
FinalVolume:	29	223	187	562	483	213	45	337	132	64	1008	465
Saturation Flow Module:												
Sat/Lane:	1900	1900	1900	1900	1900	1900	1900	1900	1900	1900	1900	1900
Adjustment:	0.95	0.89	0.89	0.92	0.95	0.85	0.95	0.91	0.91	0.95	0.95	0.85
Lanes:	1.00	1.09	0.91	2.00	2.00	1.00	1.00	1.44	0.56	1.00	2.00	1.00
Final Sat.:	1805	1830	1535	3502	3610	1615	1805	2485	973	1805	3610	1615
Capacity Analysis Module:												
Vol/Sat:	0.02	0.12	0.12	0.16	0.13	0.13	0.02	0.14	0.14	0.04	0.28	0.29
Crit Moves:		****		****			****					****
Green/Cycle:	0.05	0.20	0.20	0.27	0.42	0.42	0.04	0.42	0.42	0.11	0.48	0.48
Volume/Cap:	0.32	0.60	0.60	0.60	0.32	0.31	0.60	0.33	0.33	0.33	0.58	0.60
Delay/Veh:	47.8	37.4	37.4	32.8	19.3	19.4	59.3	19.8	19.8	42.1	19.0	20.0
User DelAdj:	1.00	1.00	1.00	1.00	1.00	1.00	1.00	1.00	1.00	1.00	1.00	1.00
AdjDel/Veh:	47.8	37.4	37.4	32.8	19.3	19.4	59.3	19.8	19.8	42.1	19.0	20.0
LOS by Move:	D	D	D	C	B	B	E	B	B	D	B	B
HCM2kAvgQ:	1	7	7	8	5	4	2	5	5	2	12	11

Note: Queue reported is the number of cars per lane.

City of Murrieta General Plan
Future General Plan (Scenario B)
AM Peak Hour

Level Of Service Computation Report
2000 HCM Operations Method (Future Volume Alternative)

Intersection #28 Jefferson Avenue & Murrieta Hot Springs Road

Cycle (sec): 100 | Critical Vol./Cap.(X): 1.382
Loss Time (sec): 0 (Y+R=4.0 sec) | Average Delay (sec/veh): 122.9
Optimal Cycle: 180 | Level Of Service: F

Street Name:	Jefferson Avenue						Murrieta Hot Springs Road					
Approach:	North Bound			South Bound			East Bound			West Bound		
Movement:	L -	T -	R	L -	T -	R	L -	T -	R	L -	T -	R
Control:	Protected			Protected			Protected			Protected		
Rights:	Include			Include			Include			Include		
Min. Green:	0	0	0	0	0	0	0	0	0	0	0	0
Lanes:	1 0	3	0 1	1 0	2	1 0	1 0	2	1 0	1 0	2	1 0
Volume Module:												
Base Vol:	11	1065	524	914	1272	81	14	77	22	852	92	812
Growth Adj:	1.00	1.00	1.00	1.00	1.00	1.00	1.00	1.00	1.00	1.00	1.00	1.00
Initial Bse:	11	1065	524	914	1272	81	14	77	22	852	92	812
Added Vol:	0	0	0	0	0	0	0	0	0	0	0	0
PasserByVol:	0	0	0	0	0	0	0	0	0	0	0	0
Initial Fut:	11	1065	524	914	1272	81	14	77	22	852	92	812
User Adj:	1.00	1.00	1.00	1.00	1.00	1.00	1.00	1.00	1.00	1.00	1.00	1.00
PHF Adj:	1.00	1.00	1.00	1.00	1.00	1.00	1.00	1.00	1.00	1.00	1.00	1.00
PHF Volume:	11	1065	524	914	1272	81	14	77	22	852	92	812
Reduct Vol:	0	0	0	0	0	0	0	0	0	0	0	0
Reduced Vol:	11	1065	524	914	1272	81	14	77	22	852	92	812
PCE Adj:	1.00	1.00	1.00	1.00	1.00	1.00	1.00	1.00	1.00	1.00	1.00	1.00
MLF Adj:	1.00	1.00	1.00	1.00	1.00	1.00	1.00	1.00	1.00	1.00	1.00	1.00
FinalVolume:	11	1065	524	914	1272	81	14	77	22	852	92	812
Saturation Flow Module:												
Sat/Lane:	1900	1900	1900	1900	1900	1900	1900	1900	1900	1900	1900	1900
Adjustment:	0.95	0.91	0.85	0.95	0.90	0.90	0.95	0.88	0.88	0.95	0.79	0.79
Lanes:	1.00	3.00	1.00	1.00	2.82	0.18	1.00	2.33	0.67	1.00	2.00	1.00
Final Sat.:	1805	5187	1615	1805	4833	308	1805	3901	1115	1805	2991	1496
Capacity Analysis Module:												
Vol/Sat:	0.01	0.21	0.32	0.51	0.26	0.26	0.01	0.02	0.02	0.47	0.03	0.54
Crit Moves:			****	****			****					****
Green/Cycle:	0.01	0.23	0.23	0.37	0.59	0.59	0.01	0.02	0.02	0.38	0.39	0.39
Volume/Cap:	0.45	0.87	1.38	1.38	0.45	0.45	1.38	1.23	1.23	1.23	0.08	1.38
Delay/Veh:	61.4	44.1	225.7	212.7	11.6	11.6	478.8	225	225.1	148.3	19.0	211.5
User DelAdj:	1.00	1.00	1.00	1.00	1.00	1.00	1.00	1.00	1.00	1.00	1.00	1.00
AdjDel/Veh:	61.4	44.1	225.7	212.7	11.6	11.6	478.8	225	225.1	148.3	19.0	211.5
LOS by Move:	E	D	F	F	B	B	F	F	F	F	B	F
HCM2kAvgQ:	1	15	36	60	9	9	2	4	4	48	1	59

Note: Queue reported is the number of cars per lane.

City of Murrieta General Plan
Future General Plan (Scenario B)
AM Peak Hour

Level Of Service Computation Report
2000 HCM Operations Method (Future Volume Alternative)

Intersection #29 Madison Avenue & Murrieta Hot Springs Road

Cycle (sec): 100 | Critical Vol./Cap.(X): 0.718
Loss Time (sec): 0 (Y+R=4.0 sec) | Average Delay (sec/veh): 27.7
Optimal Cycle: 81 | Level Of Service: C

Street Name:	Madison Avenue						Murrieta Hot Springs Road					
Approach:	North Bound			South Bound			East Bound			West Bound		
Movement:	L	T	R	L	T	R	L	T	R	L	T	R
Control:	Protected			Protected			Protected			Protected		
Rights:	Include			Include			Include			Include		
Min. Green:	0	0	0	0	0	0	0	0	0	0	0	0
Lanes:	2	0 2	0 1	2	0 1	1 0	2	0 3	1 0	2	0 3	0 1
Volume Module:												
Base Vol:	151	73	355	188	216	174	118	1155	314	789	1764	67
Growth Adj:	1.00	1.00	1.00	1.00	1.00	1.00	1.00	1.00	1.00	1.00	1.00	1.00
Initial Bse:	151	73	355	188	216	174	118	1155	314	789	1764	67
Added Vol:	0	0	0	0	0	0	0	0	0	0	0	0
PasserByVol:	0	0	0	0	0	0	0	0	0	0	0	0
Initial Fut:	151	73	355	188	216	174	118	1155	314	789	1764	67
User Adj:	1.00	1.00	1.00	1.00	1.00	1.00	1.00	1.00	1.00	1.00	1.00	1.00
PHF Adj:	1.00	1.00	1.00	1.00	1.00	1.00	1.00	1.00	1.00	1.00	1.00	1.00
PHF Volume:	151	73	355	188	216	174	118	1155	314	789	1764	67
Reduct Vol:	0	0	0	0	0	0	0	0	0	0	0	0
Reduced Vol:	151	73	355	188	216	174	118	1155	314	789	1764	67
PCE Adj:	1.00	1.00	1.00	1.00	1.00	1.00	1.00	1.00	1.00	1.00	1.00	1.00
MLF Adj:	1.00	1.00	1.00	1.00	1.00	1.00	1.00	1.00	1.00	1.00	1.00	1.00
FinalVolume:	151	73	355	188	216	174	118	1155	314	789	1764	67
Saturation Flow Module:												
Sat/Lane:	1900	1900	1900	1900	1900	1900	1900	1900	1900	1900	1900	1900
Adjustment:	0.92	0.95	0.85	0.92	0.89	0.89	0.92	0.88	0.88	0.92	0.91	0.85
Lanes:	2.00	2.00	1.00	2.00	1.11	0.89	2.00	3.14	0.86	2.00	3.00	1.00
Final Sat.:	3502	3610	1615	3502	1865	1503	3502	5264	1431	3502	5187	1615
Capacity Analysis Module:												
Vol/Sat:	0.04	0.02	0.22	0.05	0.12	0.12	0.03	0.22	0.22	0.23	0.34	0.04
Crit Moves:			****	****				****		****		
Green/Cycle:	0.10	0.31	0.31	0.07	0.28	0.28	0.06	0.31	0.31	0.31	0.56	0.56
Volume/Cap:	0.42	0.07	0.72	0.72	0.42	0.42	0.60	0.72	0.72	0.72	0.60	0.07
Delay/Veh:	42.8	24.6	35.9	54.5	29.8	29.8	51.4	32.2	32.2	32.7	14.8	10.0
User DelAdj:	1.00	1.00	1.00	1.00	1.00	1.00	1.00	1.00	1.00	1.00	1.00	1.00
AdjDel/Veh:	42.8	24.6	35.9	54.5	29.8	29.8	51.4	32.2	32.2	32.7	14.8	10.0
LOS by Move:	D	C	D	D	C	C	D	C	C	C	B	A
HCM2kAvgQ:	3	1	11	4	5	5	3	12	12	12	13	1

Note: Queue reported is the number of cars per lane.

City of Murrieta General Plan
Future General Plan (Scenario B)
AM Peak Hour

Level Of Service Computation Report
2000 HCM Operations Method (Future Volume Alternative)

Intersection #30 I-15 SB Off-Ramp & Murrieta Hot Springs Road

Cycle (sec): 100 | Critical Vol./Cap.(X): 0.733
Loss Time (sec): 0 (Y+R=4.0 sec) | Average Delay (sec/veh): 16.1
Optimal Cycle: 85 | Level Of Service: B

Street Name:	I-15 SB Off-Ramp						Murrieta Hot Springs Road					
Approach:	North Bound			South Bound			East Bound			West Bound		
Movement:	L	T	R	L	T	R	L	T	R	L	T	R
Control:	Protected			Protected			Protected			Protected		
Rights:	Include			Include			Ignore			Ignore		
Min. Green:	0	0	0	0	0	0	0	0	0	0	0	0
Lanes:	0	0 0	0 0	1	0 1!	0 1	0	0 3	0 1	0	0 3	0 1
Volume Module:												
Base Vol:	0	0	0	810	0	413	0	1436	218	0	2353	47
Growth Adj:	1.00	1.00	1.00	1.00	1.00	1.00	1.00	1.00	1.00	1.00	1.00	1.00
Initial Bse:	0	0	0	810	0	413	0	1436	218	0	2353	47
Added Vol:	0	0	0	0	0	0	0	0	0	0	0	0
PasserByVol:	0	0	0	0	0	0	0	0	0	0	0	0
Initial Fut:	0	0	0	810	0	413	0	1436	218	0	2353	47
User Adj:	1.00	1.00	1.00	1.00	1.00	1.00	1.00	1.00	0.00	1.00	1.00	0.00
PHF Adj:	1.00	1.00	1.00	1.00	1.00	1.00	1.00	1.00	0.00	1.00	1.00	0.00
PHF Volume:	0	0	0	810	0	413	0	1436	0	0	2353	0
Reduct Vol:	0	0	0	0	0	0	0	0	0	0	0	0
Reduced Vol:	0	0	0	810	0	413	0	1436	0	0	2353	0
PCE Adj:	1.00	1.00	1.00	1.00	1.00	1.00	1.00	1.00	0.00	1.00	1.00	0.00
MLF Adj:	1.00	1.00	1.00	1.00	1.00	1.00	1.00	1.00	0.00	1.00	1.00	0.00
FinalVolume:	0	0	0	810	0	413	0	1436	0	0	2353	0
Saturation Flow Module:												
Sat/Lane:	1900	1900	1900	1900	1900	1900	1900	1900	1900	1900	1900	1900
Adjustment:	1.00	1.00	1.00	0.92	1.00	0.92	1.00	0.91	1.00	1.00	0.91	1.00
Lanes:	0.00	0.00	0.00	1.66	0.00	1.34	0.00	3.00	1.00	0.00	3.00	1.00
Final Sat.:	0	0	0	2901	0	2335	0	5187	1900	0	5187	1900
Capacity Analysis Module:												
Vol/Sat:	0.00	0.00	0.00	0.28	0.00	0.18	0.00	0.28	0.00	0.00	0.45	0.00
Crit Moves:				****			****				****	
Green/Cycle:	0.00	0.00	0.00	0.38	0.00	0.38	0.00	0.62	0.00	0.00	0.62	0.00
Volume/Cap:	0.00	0.00	0.00	0.73	0.00	0.46	0.00	0.45	0.00	0.00	0.73	0.00
Delay/Veh:	0.0	0.0	0.0	28.3	0.0	23.4	0.0	10.1	0.0	0.0	14.2	0.0
User DelAdj:	1.00	1.00	1.00	1.00	1.00	1.00	1.00	1.00	1.00	1.00	1.00	1.00
AdjDel/Veh:	0.0	0.0	0.0	28.3	0.0	23.4	0.0	10.1	0.0	0.0	14.2	0.0
LOS by Move:	A	A	A	C	A	C	A	B	A	A	B	A
HCM2kAvgQ:	0	0	0	14	0	7	0	8	0	0	19	0

Note: Queue reported is the number of cars per lane.

City of Murrieta General Plan
Future General Plan (Scenario B)
AM Peak Hour

Level Of Service Computation Report
2000 HCM Operations Method (Future Volume Alternative)

Intersection #31 I-15 NB Off-Ramp & Murrieta Hot Springs Road

Cycle (sec): 100 | Critical Vol./Cap.(X): 0.407
Loss Time (sec): 0 (Y+R=4.0 sec) | Average Delay (sec/veh): 5.5
Optimal Cycle: 38 | Level Of Service: A

Street Name:	I-15 NB Off-Ramp						Murrieta Hot Springs Road					
Approach:	North Bound			South Bound			East Bound			West Bound		
Movement:	L	T	R	L	T	R	L	T	R	L	T	R
Control:	Protected			Protected			Protected			Protected		
Rights:	Include			Include			Ignore			Ignore		
Min. Green:	0	0	0	0	0	0	0	0	0	0	0	0
Lanes:	2	0 0	0 1	0	0 0	0 0	0	0 4	0 1	0	0 4	0 1
Volume Module:												
Base Vol:	286	0	61	0	0	0	0	2251	200	0	1621	608
Growth Adj:	1.00	1.00	1.00	1.00	1.00	1.00	1.00	1.00	1.00	1.00	1.00	1.00
Initial Bse:	286	0	61	0	0	0	0	2251	200	0	1621	608
Added Vol:	0	0	0	0	0	0	0	0	0	0	0	0
PasserByVol:	0	0	0	0	0	0	0	0	0	0	0	0
Initial Fut:	286	0	61	0	0	0	0	2251	200	0	1621	608
User Adj:	1.00	1.00	1.00	1.00	1.00	1.00	1.00	1.00	0.00	1.00	1.00	0.00
PHF Adj:	1.00	1.00	1.00	1.00	1.00	1.00	1.00	1.00	0.00	1.00	1.00	0.00
PHF Volume:	286	0	61	0	0	0	0	2251	0	0	1621	0
Reduct Vol:	0	0	0	0	0	0	0	0	0	0	0	0
Reduced Vol:	286	0	61	0	0	0	0	2251	0	0	1621	0
PCE Adj:	1.00	1.00	1.00	1.00	1.00	1.00	1.00	1.00	0.00	1.00	1.00	0.00
MLF Adj:	1.00	1.00	1.00	1.00	1.00	1.00	1.00	1.00	0.00	1.00	1.00	0.00
FinalVolume:	286	0	61	0	0	0	0	2251	0	0	1621	0
Saturation Flow Module:												
Sat/Lane:	1900	1900	1900	1900	1900	1900	1900	1900	1900	1900	1900	1900
Adjustment:	0.92	1.00	0.85	1.00	1.00	1.00	1.00	0.91	1.00	1.00	0.91	1.00
Lanes:	2.00	0.00	1.00	0.00	0.00	0.00	0.00	4.00	1.00	0.00	4.00	1.00
Final Sat.:	3502	0	1615	0	0	0	0	6916	1900	0	6916	1900
Capacity Analysis Module:												
Vol/Sat:	0.08	0.00	0.04	0.00	0.00	0.00	0.00	0.33	0.00	0.00	0.23	0.00
Crit Moves:	****							****		****		
Green/Cycle:	0.20	0.00	0.20	0.00	0.00	0.00	0.00	0.80	0.00	0.00	0.80	0.00
Volume/Cap:	0.41	0.00	0.19	0.00	0.00	0.00	0.00	0.41	0.00	0.00	0.29	0.00
Delay/Veh:	35.2	0.0	33.5	0.0	0.0	0.0	0.0	3.0	0.0	0.0	2.7	0.0
User DelAdj:	1.00	1.00	1.00	1.00	1.00	1.00	1.00	1.00	1.00	1.00	1.00	1.00
AdjDel/Veh:	35.2	0.0	33.5	0.0	0.0	0.0	0.0	3.0	0.0	0.0	2.7	0.0
LOS by Move:	D	A	C	A	A	A	A	A	A	A	A	A
HCM2kAvgQ:	4	0	2	0	0	0	0	6	0	0	4	0

Note: Queue reported is the number of cars per lane.

City of Murrieta General Plan
Future General Plan (Scenario B)
AM Peak Hour

Level Of Service Computation Report
2000 HCM Operations Method (Future Volume Alternative)

Intersection #32 I-215 SB Off-Ramp & Murrieta Hot Springs Road

Cycle (sec): 100 | Critical Vol./Cap.(X): 0.700
Loss Time (sec): 0 (Y+R=4.0 sec) | Average Delay (sec/veh): 12.3
Optimal Cycle: 62 | Level Of Service: B

Street Name:	I-215 SB Off-Ramp						Murrieta Hot Springs Road					
Approach:	North Bound			South Bound			East Bound			West Bound		
Movement:	L	T	R	L	T	R	L	T	R	L	T	R
Control:	Protected			Protected			Permitted			Permitted		
Rights:	Include			Include			Ignore			Ignore		
Min. Green:	0	0	0	0	0	0	0	0	0	0	0	0
Lanes:	0	0 0	0 0	1	0	1! 0	1	0	3 0	1	0	3 0	1
Volume Module:												
Base Vol:	0	0	0	476	0	515	0	1880	53	0	2605	378
Growth Adj:	1.00	1.00	1.00	1.00	1.00	1.00	1.00	1.00	1.00	1.00	1.00	1.00
Initial Bse:	0	0	0	476	0	515	0	1880	53	0	2605	378
Added Vol:	0	0	0	0	0	0	0	0	0	0	0	0
PasserByVol:	0	0	0	0	0	0	0	0	0	0	0	0
Initial Fut:	0	0	0	476	0	515	0	1880	53	0	2605	378
User Adj:	1.00	1.00	1.00	1.00	1.00	1.00	1.00	1.00	0.00	1.00	1.00	0.00
PHF Adj:	1.00	1.00	1.00	1.00	1.00	1.00	1.00	1.00	0.00	1.00	1.00	0.00
PHF Volume:	0	0	0	476	0	515	0	1880	0	0	2605	0
Reduct Vol:	0	0	0	0	0	0	0	0	0	0	0	0
Reduced Vol:	0	0	0	476	0	515	0	1880	0	0	2605	0
PCE Adj:	1.00	1.00	1.00	1.00	1.00	1.00	1.00	1.00	0.00	1.00	1.00	0.00
MLF Adj:	1.00	1.00	1.00	1.00	1.00	1.00	1.00	1.00	0.00	1.00	1.00	0.00
FinalVolume:	0	0	0	476	0	515	0	1880	0	0	2605	0
Saturation Flow Module:												
Sat/Lane:	1900	1900	1900	1900	1900	1900	1900	1900	1900	1900	1900	1900
Adjustment:	1.00	1.00	1.00	0.90	1.00	0.90	1.00	0.91	1.00	1.00	0.91	1.00
Lanes:	0.00	0.00	0.00	1.48	0.00	1.52	0.00	3.00	1.00	0.00	3.00	1.00
Final Sat.:	0	0	0	2534	0	2601	0	5187	1900	0	5187	1900
Capacity Analysis Module:												
Vol/Sat:	0.00	0.00	0.00	0.19	0.00	0.20	0.00	0.36	0.00	0.00	0.50	0.00
Crit Moves:						****					****	
Green/Cycle:	0.00	0.00	0.00	0.28	0.00	0.28	0.00	0.72	0.00	0.00	0.72	0.00
Volume/Cap:	0.00	0.00	0.00	0.66	0.00	0.70	0.00	0.51	0.00	0.00	0.70	0.00
Delay/Veh:	0.0	0.0	0.0	32.8	0.0	33.7	0.0	6.4	0.0	0.0	8.6	0.0
User DelAdj:	1.00	1.00	1.00	1.00	1.00	1.00	1.00	1.00	1.00	1.00	1.00	1.00
AdjDel/Veh:	0.0	0.0	0.0	32.8	0.0	33.7	0.0	6.4	0.0	0.0	8.6	0.0
LOS by Move:	A	A	A	C	A	C	A	A	A	A	A	A
HCM2kAvgQ:	0	0	0	10	0	11	0	9	0	0	17	0

Note: Queue reported is the number of cars per lane.

City of Murrieta General Plan
Future General Plan (Scenario B)
AM Peak Hour

Level Of Service Computation Report
2000 HCM Operations Method (Future Volume Alternative)

Intersection #33 I-215 NB Off-Ramp & Murrieta Hot Springs Road

Cycle (sec): 100 Critical Vol./Cap.(X): 0.604
Loss Time (sec): 0 (Y+R=4.0 sec) Average Delay (sec/veh): 5.5
Optimal Cycle: 47 Level Of Service: A

Street Name:	I-215 NB Off-Ramp						Murrieta Hot Springs Road					
Approach:	North Bound			South Bound			East Bound			West Bound		
Movement:	L -	T -	R	L -	T -	R	L -	T -	R	L -	T -	R
Control:	Protected			Protected			Permitted			Permitted		
Rights:	Include			Include			Ignore			Ignore		
Min. Green:	0	0	0	0	0	0	0	0	0	0	0	0
Lanes:	2 0	0	0 2	0 0	0	0 0	0 0	3	0 1	0 0	3	0 1
Volume Module:												
Base Vol:	338	0	24	0	0	0	0	1583	115	0	2633	668
Growth Adj:	1.00	1.00	1.00	1.00	1.00	1.00	1.00	1.00	1.00	1.00	1.00	1.00
Initial Bse:	338	0	24	0	0	0	0	1583	115	0	2633	668
Added Vol:	0	0	0	0	0	0	0	0	0	0	0	0
PasserByVol:	0	0	0	0	0	0	0	0	0	0	0	0
Initial Fut:	338	0	24	0	0	0	0	1583	115	0	2633	668
User Adj:	1.00	1.00	1.00	1.00	1.00	1.00	1.00	1.00	0.00	1.00	1.00	0.00
PHF Adj:	1.00	1.00	1.00	1.00	1.00	1.00	1.00	1.00	0.00	1.00	1.00	0.00
PHF Volume:	338	0	24	0	0	0	0	1583	0	0	2633	0
Reduct Vol:	0	0	0	0	0	0	0	0	0	0	0	0
Reduced Vol:	338	0	24	0	0	0	0	1583	0	0	2633	0
PCE Adj:	1.00	1.00	1.00	1.00	1.00	1.00	1.00	1.00	0.00	1.00	1.00	0.00
MLF Adj:	1.00	1.00	1.00	1.00	1.00	1.00	1.00	1.00	0.00	1.00	1.00	0.00
FinalVolume:	338	0	24	0	0	0	0	1583	0	0	2633	0
Saturation Flow Module:												
Sat/Lane:	1900	1900	1900	1900	1900	1900	1900	1900	1900	1900	1900	1900
Adjustment:	0.92	1.00	0.75	1.00	1.00	1.00	1.00	0.91	1.00	1.00	0.91	1.00
Lanes:	2.00	0.00	2.00	0.00	0.00	0.00	0.00	3.00	1.00	0.00	3.00	1.00
Final Sat.:	3502	0	2842	0	0	0	0	5187	1900	0	5187	1900
Capacity Analysis Module:												
Vol/Sat:	0.10	0.00	0.01	0.00	0.00	0.00	0.00	0.31	0.00	0.00	0.51	0.00
Crit Moves:	****										****	
Green/Cycle:	0.16	0.00	0.16	0.00	0.00	0.00	0.00	0.84	0.00	0.00	0.84	0.00
Volume/Cap:	0.60	0.00	0.05	0.00	0.00	0.00	0.00	0.36	0.00	0.00	0.60	0.00
Delay/Veh:	40.9	0.0	35.6	0.0	0.0	0.0	0.0	1.9	0.0	0.0	2.8	0.0
User DelAdj:	1.00	1.00	1.00	1.00	1.00	1.00	1.00	1.00	1.00	1.00	1.00	1.00
AdjDel/Veh:	40.9	0.0	35.6	0.0	0.0	0.0	0.0	1.9	0.0	0.0	2.8	0.0
LOS by Move:	D	A	D	A	A	A	A	A	A	A	A	A
HCM2kAvgQ:	6	0	0	0	0	0	0	4	0	0	10	0

Note: Queue reported is the number of cars per lane.

City of Murrieta General Plan
Future General Plan (Scenario B)
AM Peak Hour

Level Of Service Computation Report
2000 HCM Operations Method (Future Volume Alternative)

Intersection #34 Jackson Avenue & Murrieta Hot Springs Road

Cycle (sec): 100 Critical Vol./Cap.(X): 0.414
Loss Time (sec): 0 (Y+R=4.0 sec) Average Delay (sec/veh): 5.3
Optimal Cycle: 39 Level Of Service: A

Street Name:	Jackson Avenue						Murrieta Hot Springs Road					
Approach:	North Bound			South Bound			East Bound			West Bound		
Movement:	L -	T -	R	L -	T -	R	L -	T -	R	L -	T -	R
Control:	Protected			Protected			Protected			Protected		
Rights:	Include			Include			Include			Include		
Min. Green:	0	0	0	0	0	0	0	0	0	0	0	0
Lanes:	2 0	0	0 2	0 0	0	0 0	0 0	3	0 1	1 0	3	0 0
Volume Module:												
Base Vol:	68	0	52	0	0	0	0	1217	41	163	2045	0
Growth Adj:	1.00	1.00	1.00	1.00	1.00	1.00	1.00	1.00	1.00	1.00	1.00	1.00
Initial Bse:	68	0	52	0	0	0	0	1217	41	163	2045	0
Added Vol:	0	0	0	0	0	0	0	0	0	0	0	0
PasserByVol:	0	0	0	0	0	0	0	0	0	0	0	0
Initial Fut:	68	0	52	0	0	0	0	1217	41	163	2045	0
User Adj:	1.00	1.00	1.00	1.00	1.00	1.00	1.00	1.00	1.00	1.00	1.00	1.00
PHF Adj:	1.00	1.00	1.00	1.00	1.00	1.00	1.00	1.00	1.00	1.00	1.00	1.00
PHF Volume:	68	0	52	0	0	0	0	1217	41	163	2045	0
Reduct Vol:	0	0	0	0	0	0	0	0	0	0	0	0
Reduced Vol:	68	0	52	0	0	0	0	1217	41	163	2045	0
PCE Adj:	1.00	1.00	1.00	1.00	1.00	1.00	1.00	1.00	1.00	1.00	1.00	1.00
MLF Adj:	1.00	1.00	1.00	1.00	1.00	1.00	1.00	1.00	1.00	1.00	1.00	1.00
FinalVolume:	68	0	52	0	0	0	0	1217	41	163	2045	0
Saturation Flow Module:												
Sat/Lane:	1900	1900	1900	1900	1900	1900	1900	1900	1900	1900	1900	1900
Adjustment:	0.92	1.00	0.75	1.00	1.00	1.00	1.00	0.91	0.85	0.95	0.91	1.00
Lanes:	2.00	0.00	2.00	0.00	0.00	0.00	0.00	3.00	1.00	1.00	3.00	0.00
Final Sat.:	3502	0	2842	0	0	0	0	5187	1615	1805	5187	0
Capacity Analysis Module:												
Vol/Sat:	0.02	0.00	0.02	0.00	0.00	0.00	0.00	0.23	0.03	0.09	0.39	0.00
Crit Moves:	****						****				****	
Green/Cycle:	0.05	0.00	0.05	0.00	0.00	0.00	0.00	0.69	0.69	0.26	0.95	0.00
Volume/Cap:	0.41	0.00	0.39	0.00	0.00	0.00	0.00	0.34	0.04	0.34	0.41	0.00
Delay/Veh:	48.0	0.0	48.1	0.0	0.0	0.0	0.0	6.4	5.0	30.1	0.2	0.0
User DelAdj:	1.00	1.00	1.00	1.00	1.00	1.00	1.00	1.00	1.00	1.00	1.00	1.00
AdjDel/Veh:	48.0	0.0	48.1	0.0	0.0	0.0	0.0	6.4	5.0	30.1	0.2	0.0
LOS by Move:	D	A	D	A	A	A	A	A	A	C	A	A
HCM2kAvgQ:	2	0	1	0	0	0	0	6	0	4	2	0

Note: Queue reported is the number of cars per lane.

City of Murrieta General Plan
Future General Plan (Scenario B)
AM Peak Hour

Level Of Service Computation Report
2000 HCM Operations Method (Future Volume Alternative)

Intersection #35 Margarita Road & Murrieta Hot Springs Road

Cycle (sec): 100 Critical Vol./Cap.(X): 0.661
Loss Time (sec): 0 (Y+R=4.0 sec) Average Delay (sec/veh): 24.5
Optimal Cycle: 67 Level Of Service: C

Street Name:	Margarita Road						Murrieta Hot Springs Road					
Approach:	North Bound			South Bound			East Bound			West Bound		
Movement:	L -	T -	R	L -	T -	R	L -	T -	R	L -	T -	R
Control:	Split Phase			Split Phase			Protected			Protected		
Rights:	Include			Include			Include			Include		
Min. Green:	0	0	0	0	0	0	0	0	0	0	0	0
Lanes:	2 0	1 0	1	0	1 0	0 1	1 0	2 1	0	1 0	2 1	0
Volume Module:												
Base Vol:	628	60	127	41	17	7	162	751	460	304	1795	72
Growth Adj:	1.00	1.00	1.00	1.00	1.00	1.00	1.00	1.00	1.00	1.00	1.00	1.00
Initial Bse:	628	60	127	41	17	7	162	751	460	304	1795	72
Added Vol:	0	0	0	0	0	0	0	0	0	0	0	0
PasserByVol:	0	0	0	0	0	0	0	0	0	0	0	0
Initial Fut:	628	60	127	41	17	7	162	751	460	304	1795	72
User Adj:	1.00	1.00	1.00	1.00	1.00	1.00	1.00	1.00	1.00	1.00	1.00	1.00
PHF Adj:	1.00	1.00	1.00	1.00	1.00	1.00	1.00	1.00	1.00	1.00	1.00	1.00
PHF Volume:	628	60	127	41	17	7	162	751	460	304	1795	72
Reduct Vol:	0	0	0	0	0	0	0	0	0	0	0	0
Reduced Vol:	628	60	127	41	17	7	162	751	460	304	1795	72
PCE Adj:	1.00	1.00	1.00	1.00	1.00	1.00	1.00	1.00	1.00	1.00	1.00	1.00
MLF Adj:	1.00	1.00	1.00	1.00	1.00	1.00	1.00	1.00	1.00	1.00	1.00	1.00
FinalVolume:	628	60	127	41	17	7	162	751	460	304	1795	72
Saturation Flow Module:												
Sat/Lane:	1900	1900	1900	1900	1900	1900	1900	1900	1900	1900	1900	1900
Adjustment:	0.92	1.00	0.85	0.97	0.97	0.85	0.95	0.86	0.86	0.95	0.90	0.90
Lanes:	2.00	1.00	1.00	0.71	0.29	1.00	1.00	2.00	1.00	1.00	2.88	0.12
Final Sat.:	3502	1900	1615	1297	538	1615	1805	3261	1630	1805	4957	199
Capacity Analysis Module:												
Vol/Sat:	0.18	0.03	0.08	0.03	0.03	0.00	0.09	0.23	0.28	0.17	0.36	0.36
Crit Moves:	****			****					****	****		
Green/Cycle:	0.27	0.27	0.27	0.05	0.05	0.05	0.14	0.43	0.43	0.25	0.55	0.55
Volume/Cap:	0.66	0.12	0.29	0.66	0.66	0.09	0.66	0.54	0.66	0.66	0.66	0.66
Delay/Veh:	34.1	27.5	29.2	64.1	64.1	46.0	47.8	21.6	23.8	37.0	16.8	16.8
User DelAdj:	1.00	1.00	1.00	1.00	1.00	1.00	1.00	1.00	1.00	1.00	1.00	1.00
AdjDel/Veh:	34.1	27.5	29.2	64.1	64.1	46.0	47.8	21.6	23.8	37.0	16.8	16.8
LOS by Move:	C	C	C	E	E	D	D	C	C	D	B	B
HCM2kAvgQ:	10	1	3	3	3	0	6	10	13	9	15	15

Note: Queue reported is the number of cars per lane.

City of Murrieta General Plan
Future General Plan (Scenario B)
AM Peak Hour

Level Of Service Computation Report
2000 HCM Operations Method (Future Volume Alternative)

Intersection #36 French Valley Parkway & Murrieta Hot Springs Road

Cycle (sec): 100 Critical Vol./Cap.(X): 0.742
Loss Time (sec): 0 (Y+R=4.0 sec) Average Delay (sec/veh): 13.1
Optimal Cycle: 88 Level Of Service: B

Street Name:	French Valley Parkway						Murrieta Hot Springs Road					
Approach:	North Bound			South Bound			East Bound			West Bound		
Movement:	L -	T -	R	L -	T -	R	L -	T -	R	L -	T -	R
Control:	Protected			Protected			Protected			Protected		
Rights:	Ovl			Include			Include			Include		
Min. Green:	0	0	0	0	0	0	0	0	0	0	0	0
Lanes:	1 0	0 0	2	0 0	0 0	0	0 0	2 1	0	1 0	3 0	0
Volume Module:												
Base Vol:	20	0	832	0	0	0	0	1242	291	771	2012	0
Growth Adj:	1.00	1.00	1.00	1.00	1.00	1.00	1.00	1.00	1.00	1.00	1.00	1.00
Initial Bse:	20	0	832	0	0	0	0	1242	291	771	2012	0
Added Vol:	0	0	0	0	0	0	0	0	0	0	0	0
PasserByVol:	0	0	0	0	0	0	0	0	0	0	0	0
Initial Fut:	20	0	832	0	0	0	0	1242	291	771	2012	0
User Adj:	1.00	1.00	1.00	1.00	1.00	1.00	1.00	1.00	1.00	1.00	1.00	1.00
PHF Adj:	1.00	1.00	1.00	1.00	1.00	1.00	1.00	1.00	1.00	1.00	1.00	1.00
PHF Volume:	20	0	832	0	0	0	0	1242	291	771	2012	0
Reduct Vol:	0	0	0	0	0	0	0	0	0	0	0	0
Reduced Vol:	20	0	832	0	0	0	0	1242	291	771	2012	0
PCE Adj:	1.00	1.00	1.00	1.00	1.00	1.00	1.00	1.00	1.00	1.00	1.00	1.00
MLF Adj:	1.00	1.00	1.00	1.00	1.00	1.00	1.00	1.00	1.00	1.00	1.00	1.00
FinalVolume:	20	0	832	0	0	0	0	1242	291	771	2012	0
Saturation Flow Module:												
Sat/Lane:	1900	1900	1900	1900	1900	1900	1900	1900	1900	1900	1900	1900
Adjustment:	0.95	1.00	0.75	1.00	1.00	1.00	1.00	0.88	0.88	0.95	0.91	1.00
Lanes:	1.00	0.00	2.00	0.00	0.00	0.00	0.00	2.43	0.57	1.00	3.00	0.00
Final Sat.:	1805	0	2842	0	0	0	0	4085	957	1805	5187	0
Capacity Analysis Module:												
Vol/Sat:	0.01	0.00	0.29	0.00	0.00	0.00	0.00	0.30	0.30	0.43	0.39	0.00
Crit Moves:	****							****		****		
Green/Cycle:	0.01	0.00	0.59	0.00	0.00	0.00	0.00	0.41	0.41	0.58	0.99	0.00
Volume/Cap:	0.74	0.00	0.50	0.00	0.00	0.00	0.00	0.74	0.74	0.74	0.39	0.00
Delay/Veh:	120.4	0.0	12.1	0.0	0.0	0.0	0.0	26.5	26.5	18.6	0.1	0.0
User DelAdj:	1.00	1.00	1.00	1.00	1.00	1.00	1.00	1.00	1.00	1.00	1.00	1.00
AdjDel/Veh:	120.4	0.0	12.1	0.0	0.0	0.0	0.0	26.5	26.5	18.6	0.1	0.0
LOS by Move:	F	A	B	A	A	A	A	C	C	B	A	A
HCM2kAvgQ:	2	0	9	0	0	0	0	16	16	19	1	0

Note: Queue reported is the number of cars per lane.

City of Murrieta General Plan
Future General Plan (Scenario B)
AM Peak Hour

Level Of Service Computation Report
2000 HCM Operations Method (Future Volume Alternative)

Intersection #37 Jefferson Avenue & Guava Street

Cycle (sec): 100 | Critical Vol./Cap.(X): 0.489
Loss Time (sec): 0 (Y+R=4.0 sec) | Average Delay (sec/veh): 9.1
Optimal Cycle: 36 | Level Of Service: A

Street Name:	Jefferson Avenue						Guava Street					
Approach:	North Bound			South Bound			East Bound			West Bound		
Movement:	L	T	R	L	T	R	L	T	R	L	T	R
Control:	Protected			Protected			Permitted			Permitted		
Rights:	Include			Include			Include			Include		
Min. Green:	0	0	0	0	0	0	0	0	0	0	0	0
Lanes:	1 0	2 1	0	1 0	2 1	0	1 0	0 1	0	1 0	1 1	0
Volume Module:												
Base Vol:	23	1420	3	8	1468	305	169	115	86	2	32	10
Growth Adj:	1.00	1.00	1.00	1.00	1.00	1.00	1.00	1.00	1.00	1.00	1.00	1.00
Initial Bse:	23	1420	3	8	1468	305	169	115	86	2	32	10
Added Vol:	0	0	0	0	0	0	0	0	0	0	0	0
PasserByVol:	0	0	0	0	0	0	0	0	0	0	0	0
Initial Fut:	23	1420	3	8	1468	305	169	115	86	2	32	10
User Adj:	1.00	1.00	1.00	1.00	1.00	1.00	1.00	1.00	1.00	1.00	1.00	1.00
PHF Adj:	1.00	1.00	1.00	1.00	1.00	1.00	1.00	1.00	1.00	1.00	1.00	1.00
PHF Volume:	23	1420	3	8	1468	305	169	115	86	2	32	10
Reduct Vol:	0	0	0	0	0	0	0	0	0	0	0	0
Reduced Vol:	23	1420	3	8	1468	305	169	115	86	2	32	10
PCE Adj:	1.00	1.00	1.00	1.00	1.00	1.00	1.00	1.00	1.00	1.00	1.00	1.00
MLF Adj:	1.00	1.00	1.00	1.00	1.00	1.00	1.00	1.00	1.00	1.00	1.00	1.00
FinalVolume:	23	1420	3	8	1468	305	169	115	86	2	32	10
Saturation Flow Module:												
Sat/Lane:	1900	1900	1900	1900	1900	1900	1900	1900	1900	1900	1900	1900
Adjustment:	0.95	0.91	0.91	0.95	0.89	0.89	0.71	0.94	0.94	0.38	0.92	0.92
Lanes:	1.00	2.99	0.01	1.00	2.48	0.52	1.00	0.57	0.43	1.00	1.52	0.48
Final Sat.:	1805	5176	11	1805	4183	869	1347	1017	761	722	2651	829
Capacity Analysis Module:												
Vol/Sat:	0.01	0.27	0.27	0.00	0.35	0.35	0.13	0.11	0.11	0.00	0.01	0.01
Crit Moves:	****				****		****					
Green/Cycle:	0.03	0.73	0.73	0.01	0.72	0.72	0.26	0.26	0.26	0.26	0.26	0.26
Volume/Cap:	0.49	0.37	0.37	0.37	0.49	0.49	0.49	0.44	0.44	0.01	0.05	0.05
Delay/Veh:	55.8	5.0	5.0	59.8	6.3	6.3	32.7	31.8	31.8	27.7	28.0	28.0
User DelAdj:	1.00	1.00	1.00	1.00	1.00	1.00	1.00	1.00	1.00	1.00	1.00	1.00
AdjDel/Veh:	55.8	5.0	5.0	59.8	6.3	6.3	32.7	31.8	31.8	27.7	28.0	28.0
LOS by Move:	E	A	A	E	A	A	C	C	C	C	C	C
HCM2kAvgQ:	1	6	6	1	9	9	5	5	5	0	1	1

Note: Queue reported is the number of cars per lane.

City of Murrieta General Plan
Future General Plan (Scenario B)
AM Peak Hour

Level Of Service Computation Report
2000 HCM Operations Method (Future Volume Alternative)

Intersection #39 Washington Ave & Calle Del Oso Oro/Nutmeg

Cycle (sec): 100 | Critical Vol./Cap.(X): 0.689
Loss Time (sec): 0 (Y+R=4.0 sec) | Average Delay (sec/veh): 26.7
Optimal Cycle: 73 | Level Of Service: C

Street Name:	Washington Ave						Calle Del Oso Oro/Nutmeg					
Approach:	North Bound			South Bound			East Bound			West Bound		
Movement:	L	T	R	L	T	R	L	T	R	L	T	R
Control:	Protected			Protected			Protected			Protected		
Rights:	Include			Include			Include			Include		
Min. Green:	0	0	0	0	0	0	0	0	0	0	0	0
Lanes:	1 0	2 1	0	1 0	2 1	0	1 0	1 1	0	1 0	1 1	0
Volume Module:												
Base Vol:	264	162	123	86	197	89	64	592	675	142	200	40
Growth Adj:	1.00	1.00	1.00	1.00	1.00	1.00	1.00	1.00	1.00	1.00	1.00	1.00
Initial Bse:	264	162	123	86	197	89	64	592	675	142	200	40
Added Vol:	0	0	0	0	0	0	0	0	0	0	0	0
PasserByVol:	0	0	0	0	0	0	0	0	0	0	0	0
Initial Fut:	264	162	123	86	197	89	64	592	675	142	200	40
User Adj:	1.00	1.00	1.00	1.00	1.00	1.00	1.00	1.00	1.00	1.00	1.00	1.00
PHF Adj:	1.00	1.00	1.00	1.00	1.00	1.00	1.00	1.00	1.00	1.00	1.00	1.00
PHF Volume:	264	162	123	86	197	89	64	592	675	142	200	40
Reduct Vol:	0	0	0	0	0	0	0	0	0	0	0	0
Reduced Vol:	264	162	123	86	197	89	64	592	675	142	200	40
PCE Adj:	1.00	1.00	1.00	1.00	1.00	1.00	1.00	1.00	1.00	1.00	1.00	1.00
MLF Adj:	1.00	1.00	1.00	1.00	1.00	1.00	1.00	1.00	1.00	1.00	1.00	1.00
FinalVolume:	264	162	123	86	197	89	64	592	675	142	200	40
Saturation Flow Module:												
Sat/Lane:	1900	1900	1900	1900	1900	1900	1900	1900	1900	1900	1900	1900
Adjustment:	0.95	0.85	0.85	0.95	0.87	0.87	0.95	0.87	0.87	0.95	0.93	0.93
Lanes:	1.00	2.00	1.00	1.00	2.07	0.93	1.00	1.00	1.00	1.00	1.67	0.33
Final Sat.:	1805	3233	1617	1805	3405	1538	1805	1661	1661	1805	2933	587
Capacity Analysis Module:												
Vol/Sat:	0.15	0.05	0.08	0.05	0.06	0.06	0.04	0.36	0.41	0.08	0.07	0.07
Crit Moves:	****				****				****	****		
Green/Cycle:	0.21	0.18	0.18	0.11	0.08	0.08	0.24	0.59	0.59	0.11	0.46	0.46
Volume/Cap:	0.69	0.28	0.42	0.42	0.69	0.69	0.15	0.60	0.69	0.69	0.15	0.15
Delay/Veh:	41.6	35.4	36.6	42.6	49.4	49.4	30.0	13.6	15.3	52.1	15.5	15.5
User DelAdj:	1.00	1.00	1.00	1.00	1.00	1.00	1.00	1.00	1.00	1.00	1.00	1.00
AdjDel/Veh:	41.6	35.4	36.6	42.6	49.4	49.4	30.0	13.6	15.3	52.1	15.5	15.5
LOS by Move:	D	D	D	D	D	D	C	B	B	D	B	B
HCM2kAvgQ:	9	3	4	3	5	5	2	13	16	6	2	2

Note: Queue reported is the number of cars per lane.

City of Murrieta General Plan
Future General Plan (Scenario B)
AM Peak Hour

Level Of Service Computation Report
2000 HCM Operations Method (Future Volume Alternative)

Intersection #40 Clinton Keith Rd & Calle de Oso Oro/Bear Creek Dr

Cycle (sec): 100 | Critical Vol./Cap.(X): 0.949
Loss Time (sec): 0 (Y+R=4.0 sec) | Average Delay (sec/veh): 23.8
Optimal Cycle: 180 | Level Of Service: C

Street Name:	Clinton Keith Rd						Calle de Oso Oro/Bear Creek Dr					
Approach:	North Bound			South Bound			East Bound			West Bound		
Movement:	L	T	R	L	T	R	L	T	R	L	T	R
Control:	Protected			Protected			Permitted			Permitted		
Rights:	Include			Include			Include			Include		
Min. Green:	0	0	0	0	0	0	0	0	0	0	0	0
Lanes:	1	0	1	1	0	1	0	1	1	0	1	0	0	1	0	1	1	0
Volume Module:												
Base Vol:	60	107	273	5	114	195	267	618	160	422	615	20
Growth Adj:	1.00	1.00	1.00	1.00	1.00	1.00	1.00	1.00	1.00	1.00	1.00	1.00
Initial Bse:	60	107	273	5	114	195	267	618	160	422	615	20
Added Vol:	0	0	0	0	0	0	0	0	0	0	0	0
PasserByVol:	0	0	0	0	0	0	0	0	0	0	0	0
Initial Fut:	60	107	273	5	114	195	267	618	160	422	615	20
User Adj:	1.00	1.00	1.00	1.00	1.00	1.00	1.00	1.00	1.00	1.00	1.00	1.00
PHF Adj:	1.00	1.00	1.00	1.00	1.00	1.00	1.00	1.00	1.00	1.00	1.00	1.00
PHF Volume:	60	107	273	5	114	195	267	618	160	422	615	20
Reduct Vol:	0	0	0	0	0	0	0	0	0	0	0	0
Reduced Vol:	60	107	273	5	114	195	267	618	160	422	615	20
PCE Adj:	1.00	1.00	1.00	1.00	1.00	1.00	1.00	1.00	1.00	1.00	1.00	1.00
MLF Adj:	1.00	1.00	1.00	1.00	1.00	1.00	1.00	1.00	1.00	1.00	1.00	1.00
FinalVolume:	60	107	273	5	114	195	267	618	160	422	615	20
Saturation Flow Module:												
Sat/Lane:	1900	1900	1900	1900	1900	1900	1900	1900	1900	1900	1900	1900
Adjustment:	0.95	0.85	0.85	0.95	0.86	0.86	0.40	0.97	0.97	0.29	0.95	0.95
Lanes:	1.00	1.00	1.00	1.00	1.00	1.00	1.00	0.79	0.21	1.00	1.94	0.06
Final Sat.:	1805	1610	1610	1805	1634	1634	758	1462	379	543	3479	113
Capacity Analysis Module:												
Vol/Sat:	0.03	0.07	0.17	0.00	0.07	0.12	0.35	0.42	0.42	0.78	0.18	0.18
Crit Moves:			****	****						****		
Green/Cycle:	0.04	0.18	0.18	0.00	0.14	0.14	0.82	0.82	0.82	0.82	0.82	0.82
Volume/Cap:	0.84	0.37	0.95	0.95	0.49	0.84	0.43	0.52	0.52	0.95	0.22	0.22
Delay/Veh:	103.4	36.4	72.6	404.5	40.2	57.5	3.0	3.2	3.2	37.4	2.0	2.0
User DelAdj:	1.00	1.00	1.00	1.00	1.00	1.00	1.00	1.00	1.00	1.00	1.00	1.00
AdjDel/Veh:	103.4	36.4	72.6	404.5	40.2	57.5	3.0	3.2	3.2	37.4	2.0	2.0
LOS by Move:	F	D	E	F	D	E	A	A	A	D	A	A
HCM2kAvgQ:	4	3	13	1	4	9	3	8	8	16	2	2

Note: Queue reported is the number of cars per lane.

City of Murrieta General Plan
Future General Plan (Scenario B)
AM Peak Hour

Level Of Service Computation Report
2000 HCM Operations Method (Future Volume Alternative)

Intersection #43 Jefferson Ave & Lemon St

Cycle (sec): 100 | Critical Vol./Cap.(X): 0.900
Loss Time (sec): 0 (Y+R=4.0 sec) | Average Delay (sec/veh): 25.8
Optimal Cycle: 180 | Level Of Service: C

Street Name:	Jefferson Ave									Lemon St		
Approach:	North Bound			South Bound			East Bound			West Bound		
Movement:	L	T	R	L	T	R	L	T	R	L	T	R
Control:	Protected			Protected			Protected			Protected		
Rights:	Include			Include			Include			Include		
Min. Green:	0	0	0	0	0	0	0	0	0	0	0	0
Lanes:	1	0	2	1	0	1	0	2	1	0	1	0	1	0	1	1	0	0	1	0
Volume Module:												
Base Vol:	282	758	28	4	2549	155	35	3	344	8	12	6
Growth Adj:	1.00	1.00	1.00	1.00	1.00	1.00	1.00	1.00	1.00	1.00	1.00	1.00
Initial Bse:	282	758	28	4	2549	155	35	3	344	8	12	6
Added Vol:	0	0	0	0	0	0	0	0	0	0	0	0
PasserByVol:	0	0	0	0	0	0	0	0	0	0	0	0
Initial Fut:	282	758	28	4	2549	155	35	3	344	8	12	6
User Adj:	1.00	1.00	1.00	1.00	1.00	1.00	1.00	1.00	1.00	1.00	1.00	1.00
PHF Adj:	1.00	1.00	1.00	1.00	1.00	1.00	1.00	1.00	1.00	1.00	1.00	1.00
PHF Volume:	282	758	28	4	2549	155	35	3	344	8	12	6
Reduct Vol:	0	0	0	0	0	0	0	0	0	0	0	0
Reduced Vol:	282	758	28	4	2549	155	35	3	344	8	12	6
PCE Adj:	1.00	1.00	1.00	1.00	1.00	1.00	1.00	1.00	1.00	1.00	1.00	1.00
MLF Adj:	1.00	1.00	1.00	1.00	1.00	1.00	1.00	1.00	1.00	1.00	1.00	1.00
FinalVolume:	282	758	28	4	2549	155	35	3	344	8	12	6
Saturation Flow Module:												
Sat/Lane:	1900	1900	1900	1900	1900	1900	1900	1900	1900	1900	1900	1900
Adjustment:	0.95	0.91	0.91	0.95	0.90	0.90	0.95	1.00	0.85	0.95	0.95	0.95
Lanes:	1.00	2.89	0.11	1.00	2.83	0.17	1.00	1.00	1.00	1.00	0.67	0.33
Final Sat.:	1805	4977	184	1805	4846	295	1805	1900	1615	1805	1203	602
Capacity Analysis Module:												
Vol/Sat:	0.16	0.15	0.15	0.00	0.53	0.53	0.02	0.00	0.21	0.00	0.01	0.01
Crit Moves:	****				****				****	****		
Green/Cycle:	0.17	0.75	0.75	0.01	0.58	0.58	0.16	0.24	0.24	0.00	0.08	0.08
Volume/Cap:	0.90	0.20	0.20	0.20	0.90	0.90	0.12	0.01	0.90	0.90	0.12	0.12
Delay/Veh:	67.5	3.8	3.8	54.1	22.3	22.3	36.2	29.2	60.4	290.4	42.9	42.9
User DelAdj:	1.00	1.00	1.00	1.00	1.00	1.00	1.00	1.00	1.00	1.00	1.00	1.00
AdjDel/Veh:	67.5	3.8	3.8	54.1	22.3	22.3	36.2	29.2	60.4	290.4	42.9	42.9
LOS by Move:	E	A	A	D	C	C	D	C	E	F	D	D
HCM2kAvgQ:	12	3	3	0	30	30	1	0	14	1	1	1

Note: Queue reported is the number of cars per lane.

City of Murrieta General Plan
Future General Plan (Scenario B)
AM Peak Hour

Level Of Service Computation Report
2000 HCM Operations Method (Future Volume Alternative)

Intersection #44 Jefferson Ave & Kalmia St

Cycle (sec): 100 | Critical Vol./Cap.(X): 1.054
Loss Time (sec): 0 (Y+R=4.0 sec) | Average Delay (sec/veh): 56.4
Optimal Cycle: 180 | Level Of Service: E

Street Name:	Jefferson Ave						Kalmia St					
Approach:	North Bound			South Bound			East Bound			West Bound		
Movement:	L	T	R	L	T	R	L	T	R	L	T	R
Control:	Protected			Protected			Protected			Protected		
Rights:	Include			Include			Include			Include		
Min. Green:	0	0	0	0	0	0	0	0	0	0	0	0
Lanes:	2 0	3 0	1	1 0	2 1	0	1 0	2 1	0	1 0	1 1	0
Volume Module:												
Base Vol:	258	930	266	954	1732	153	49	496	349	236	341	524
Growth Adj:	1.00	1.00	1.00	1.00	1.00	1.00	1.00	1.00	1.00	1.00	1.00	1.00
Initial Bse:	258	930	266	954	1732	153	49	496	349	236	341	524
Added Vol:	0	0	0	0	0	0	0	0	0	0	0	0
PasserByVol:	0	0	0	0	0	0	0	0	0	0	0	0
Initial Fut:	258	930	266	954	1732	153	49	496	349	236	341	524
User Adj:	1.00	1.00	1.00	1.00	1.00	1.00	1.00	1.00	1.00	1.00	1.00	1.00
PHF Adj:	1.00	1.00	1.00	1.00	1.00	1.00	1.00	1.00	1.00	1.00	1.00	1.00
PHF Volume:	258	930	266	954	1732	153	49	496	349	236	341	524
Reduct Vol:	0	0	0	0	0	0	0	0	0	0	0	0
Reduced Vol:	258	930	266	954	1732	153	49	496	349	236	341	524
PCE Adj:	1.00	1.00	1.00	1.00	1.00	1.00	1.00	1.00	1.00	1.00	1.00	1.00
MLF Adj:	1.00	1.00	1.00	1.00	1.00	1.00	1.00	1.00	1.00	1.00	1.00	1.00
FinalVolume:	258	930	266	954	1732	153	49	496	349	236	341	524
Saturation Flow Module:												
Sat/Lane:	1900	1900	1900	1900	1900	1900	1900	1900	1900	1900	1900	1900
Adjustment:	0.92	0.91	0.85	0.95	0.90	0.90	0.95	0.85	0.85	0.95	0.86	0.86
Lanes:	2.00	3.00	1.00	1.00	2.76	0.24	1.00	2.00	1.00	1.00	1.00	1.00
Final Sat.:	3502	5187	1615	1805	4709	416	1805	3244	1622	1805	1641	1641
Capacity Analysis Module:												
Vol/Sat:	0.07	0.18	0.16	0.53	0.37	0.37	0.03	0.15	0.22	0.13	0.21	0.32
Crit Moves:		****		****					****	****		
Green/Cycle:	0.11	0.17	0.17	0.50	0.56	0.56	0.03	0.20	0.20	0.12	0.30	0.30
Volume/Cap:	0.66	1.05	0.97	1.05	0.66	0.66	1.06	0.75	1.05	1.05	0.69	1.06
Delay/Veh:	46.6	87.0	86.6	70.0	15.9	15.9	197.5	40.2	86.7	118.8	32.3	82.0
User DelAdj:	1.00	1.00	1.00	1.00	1.00	1.00	1.00	1.00	1.00	1.00	1.00	1.00
AdjDel/Veh:	46.6	87.0	86.6	70.0	15.9	15.9	197.5	40.2	86.7	118.8	32.3	82.0
LOS by Move:	D	F	F	E	B	B	F	D	F	F	C	F
HCM2kAvgQ:	5	17	13	41	15	15	4	10	19	13	11	26

Note: Queue reported is the number of cars per lane.

City of Murrieta General Plan
Future General Plan (Scenario B)
AM Peak Hour

Level Of Service Computation Report
2000 HCM Operations Method (Future Volume Alternative)

Intersection #45 Jefferson Ave & Juniper St

Cycle (sec): 100 | Critical Vol./Cap.(X): 0.825
Loss Time (sec): 0 (Y+R=4.0 sec) | Average Delay (sec/veh): 23.5
Optimal Cycle: 130 | Level Of Service: C

Street Name:	Jefferson Ave						Juniper St					
Approach:	North Bound			South Bound			East Bound			West Bound		
Movement:	L	T	R	L	T	R	L	T	R	L	T	R
Control:	Protected			Protected			Protected			Protected		
Rights:	Include			Include			Include			Include		
Min. Green:	0	0	0	0	0	0	0	0	0	0	0	0
Lanes:	1 0	2 1	0	1 0	2 1	0	1 0	1 1	0	1 0	1 1	0
Volume Module:												
Base Vol:	485	1291	36	69	2046	172	135	100	195	7	100	21
Growth Adj:	1.00	1.00	1.00	1.00	1.00	1.00	1.00	1.00	1.00	1.00	1.00	1.00
Initial Bse:	485	1291	36	69	2046	172	135	100	195	7	100	21
Added Vol:	0	0	0	0	0	0	0	0	0	0	0	0
PasserByVol:	0	0	0	0	0	0	0	0	0	0	0	0
Initial Fut:	485	1291	36	69	2046	172	135	100	195	7	100	21
User Adj:	1.00	1.00	1.00	1.00	1.00	1.00	1.00	1.00	1.00	1.00	1.00	1.00
PHF Adj:	1.00	1.00	1.00	1.00	1.00	1.00	1.00	1.00	1.00	1.00	1.00	1.00
PHF Volume:	485	1291	36	69	2046	172	135	100	195	7	100	21
Reduct Vol:	0	0	0	0	0	0	0	0	0	0	0	0
Reduced Vol:	485	1291	36	69	2046	172	135	100	195	7	100	21
PCE Adj:	1.00	1.00	1.00	1.00	1.00	1.00	1.00	1.00	1.00	1.00	1.00	1.00
MLF Adj:	1.00	1.00	1.00	1.00	1.00	1.00	1.00	1.00	1.00	1.00	1.00	1.00
FinalVolume:	485	1291	36	69	2046	172	135	100	195	7	100	21
Saturation Flow Module:												
Sat/Lane:	1900	1900	1900	1900	1900	1900	1900	1900	1900	1900	1900	1900
Adjustment:	0.95	0.91	0.91	0.95	0.90	0.90	0.95	0.86	0.86	0.95	0.93	0.93
Lanes:	1.00	2.92	0.08	1.00	2.77	0.23	1.00	1.00	1.00	1.00	1.65	0.35
Final Sat.:	1805	5026	140	1805	4727	397	1805	1626	1626	1805	2906	610
Capacity Analysis Module:												
Vol/Sat:	0.27	0.26	0.26	0.04	0.43	0.43	0.07	0.06	0.12	0.00	0.03	0.03
Crit Moves:	****				****				****	****		
Green/Cycle:	0.33	0.74	0.74	0.11	0.52	0.52	0.10	0.15	0.15	0.00	0.05	0.05
Volume/Cap:	0.83	0.35	0.35	0.35	0.83	0.83	0.73	0.42	0.83	0.83	0.73	0.73
Delay/Veh:	40.4	4.6	4.6	42.2	22.2	22.2	57.1	39.3	56.0	251.9	62.0	62.0
User DelAdj:	1.00	1.00	1.00	1.00	1.00	1.00	1.00	1.00	1.00	1.00	1.00	1.00
AdjDel/Veh:	40.4	4.6	4.6	42.2	22.2	22.2	57.1	39.3	56.0	251.9	62.0	62.0
LOS by Move:	D	A	A	D	C	C	E	D	E	F	E	E
HCM2kAvgQ:	16	5	5	2	23	23	6	3	9	1	3	3

Note: Queue reported is the number of cars per lane.

City of Murrieta General Plan
Future General Plan (Scenario B)
AM Peak Hour

Level Of Service Computation Report
2000 HCM Operations Method (Future Volume Alternative)

Intersection #46 Jefferson Ave & Ivy St/Los Alamos Rd

Cycle (sec): 100 | Critical Vol./Cap.(X): 0.703
Loss Time (sec): 0 (Y+R=4.0 sec) | Average Delay (sec/veh): 26.2
Optimal Cycle: 77 | Level Of Service: C

Street Name:	Jefferson Ave						Ivy St/Los Alamos Rd					
Approach:	North Bound			South Bound			East Bound			West Bound		
Movement:	L - T - R			L - T - R			L - T - R			L - T - R		
Control:	Protected			Protected			Protected			Protected		
Rights:	Include			Include			Include			Include		
Min. Green:	0	0	0	0	0	0	0	0	0	0	0	0
Lanes:	2 0	3 0	1	2 0	3 0	1	1 0	1 1	0	1 0	1 1	0
Volume Module:												
Base Vol:	166	1321	95	310	1866	52	53	88	129	354	82	421
Growth Adj:	1.00	1.00	1.00	1.00	1.00	1.00	1.00	1.00	1.00	1.00	1.00	1.00
Initial Bse:	166	1321	95	310	1866	52	53	88	129	354	82	421
Added Vol:	0	0	0	0	0	0	0	0	0	0	0	0
PasserByVol:	0	0	0	0	0	0	0	0	0	0	0	0
Initial Fut:	166	1321	95	310	1866	52	53	88	129	354	82	421
User Adj:	1.00	1.00	1.00	1.00	1.00	1.00	1.00	1.00	1.00	1.00	1.00	1.00
PHF Adj:	1.00	1.00	1.00	1.00	1.00	1.00	1.00	1.00	1.00	1.00	1.00	1.00
PHF Volume:	166	1321	95	310	1866	52	53	88	129	354	82	421
Reduct Vol:	0	0	0	0	0	0	0	0	0	0	0	0
Reduced Vol:	166	1321	95	310	1866	52	53	88	129	354	82	421
PCE Adj:	1.00	1.00	1.00	1.00	1.00	1.00	1.00	1.00	1.00	1.00	1.00	1.00
MLF Adj:	1.00	1.00	1.00	1.00	1.00	1.00	1.00	1.00	1.00	1.00	1.00	1.00
FinalVolume:	166	1321	95	310	1866	52	53	88	129	354	82	421
Saturation Flow Module:												
Sat/Lane:	1900	1900	1900	1900	1900	1900	1900	1900	1900	1900	1900	1900
Adjustment:	0.92	0.91	0.85	0.92	0.91	0.85	0.95	0.87	0.87	0.95	0.83	0.83
Lanes:	2.00	3.00	1.00	2.00	3.00	1.00	1.00	1.00	1.00	1.00	1.00	1.00
Final Sat.:	3502	5187	1615	3502	5187	1615	1805	1644	1644	1805	1578	1578
Capacity Analysis Module:												
Vol/Sat:	0.05	0.25	0.06	0.09	0.36	0.03	0.03	0.05	0.08	0.20	0.05	0.27
Crit Moves:	****				****		****					****
Green/Cycle:	0.07	0.43	0.43	0.15	0.51	0.51	0.04	0.12	0.12	0.30	0.38	0.38
Volume/Cap:	0.70	0.59	0.14	0.59	0.70	0.06	0.70	0.44	0.65	0.65	0.14	0.70
Delay/Veh:	54.9	22.3	17.4	41.5	19.5	12.4	73.2	41.5	46.5	33.2	20.3	29.4
User DelAdj:	1.00	1.00	1.00	1.00	1.00	1.00	1.00	1.00	1.00	1.00	1.00	1.00
AdjDel/Veh:	54.9	22.3	17.4	41.5	19.5	12.4	73.2	41.5	46.5	33.2	20.3	29.4
LOS by Move:	D	C	B	D	B	B	E	D	D	C	C	C
HCM2kAvgQ:	4	12	2	5	17	1	3	3	5	10	2	13

Note: Queue reported is the number of cars per lane.

City of Murrieta General Plan
Future General Plan (Scenario B)
AM Peak Hour

Level Of Service Computation Report
2000 HCM Operations Method (Future Volume Alternative)

Intersection #48 Madison Ave/I-15 SB Ramps & Kalmia St

Cycle (sec): 100 | Critical Vol./Cap.(X): 0.575
Loss Time (sec): 0 (Y+R=4.0 sec) | Average Delay (sec/veh): 31.8
Optimal Cycle: 54 | Level Of Service: C

Street Name:	Madison Ave/I-15 SB Ramps						Kalmia St					
Approach:	North Bound			South Bound			East Bound			West Bound		
Movement:	L - T - R			L - T - R			L - T - R			L - T - R		
Control:	Protected			Protected			Protected			Protected		
Rights:	Include			Include			Include			Include		
Min. Green:	0	0	0	0	0	0	0	0	0	0	0	0
Lanes:	2 0	0 0	2	2 0	1 1	0	0 0	3 1	0	2 0	2 1	1
Volume Module:												
Base Vol:	114	0	226	259	56	260	0	1453	258	437	1127	512
Growth Adj:	1.00	1.00	1.00	1.00	1.00	1.00	1.00	1.00	1.00	1.00	1.00	1.00
Initial Bse:	114	0	226	259	56	260	0	1453	258	437	1127	512
Added Vol:	0	0	0	0	0	0	0	0	0	0	0	0
PasserByVol:	0	0	0	0	0	0	0	0	0	0	0	0
Initial Fut:	114	0	226	259	56	260	0	1453	258	437	1127	512
User Adj:	1.00	1.00	1.00	1.00	1.00	1.00	1.00	1.00	1.00	1.00	1.00	1.00
PHF Adj:	1.00	1.00	1.00	1.00	1.00	1.00	1.00	1.00	1.00	1.00	1.00	1.00
PHF Volume:	114	0	226	259	56	260	0	1453	258	437	1127	512
Reduct Vol:	0	0	0	0	0	0	0	0	0	0	0	0
Reduced Vol:	114	0	226	259	56	260	0	1453	258	437	1127	512
PCE Adj:	1.00	1.00	1.00	1.00	1.00	1.00	1.00	1.00	1.00	1.00	1.00	1.00
MLF Adj:	1.00	1.00	1.00	1.00	1.00	1.00	1.00	1.00	1.00	1.00	1.00	1.00
FinalVolume:	114	0	226	259	56	260	0	1453	258	437	1127	512
Saturation Flow Module:												
Sat/Lane:	1900	1900	1900	1900	1900	1900	1900	1900	1900	1900	1900	1900
Adjustment:	0.92	1.00	0.75	0.92	0.83	0.83	1.00	0.89	0.89	0.92	0.87	0.87
Lanes:	2.00	0.00	2.00	2.00	1.00	1.00	0.00	3.40	0.60	2.00	2.75	1.25
Final Sat.:	3502	0	2842	3502	1583	1583	0	5738	1019	3502	4532	2059
Capacity Analysis Module:												
Vol/Sat:	0.03	0.00	0.08	0.07	0.04	0.16	0.00	0.25	0.25	0.12	0.25	0.25
Crit Moves:	****					****		****		****		
Green/Cycle:	0.06	0.00	0.06	0.16	0.29	0.29	0.00	0.44	0.44	0.22	0.66	0.66
Volume/Cap:	0.57	0.00	1.40	0.45	0.12	0.57	0.00	0.57	0.57	0.57	0.38	0.38
Delay/Veh:	50.1	0.0	261.8	38.2	26.5	32.0	0.0	21.2	21.2	36.1	7.9	7.9
User DelAdj:	1.00	1.00	1.00	1.00	1.00	1.00	1.00	1.00	1.00	1.00	1.00	1.00
AdjDel/Veh:	50.1	0.0	261.8	38.2	26.5	32.0	0.0	21.2	21.2	36.1	7.9	7.9
LOS by Move:	D	A	F	D	C	C	A	C	C	D	A	A
HCM2kAvgQ:	3	0	10	4	1	8	0	11	11	7	6	6

Note: Queue reported is the number of cars per lane.

City of Murrieta General Plan
Future General Plan (Scenario B)
AM Peak Hour

Level Of Service Computation Report
2000 HCM Operations Method (Future Volume Alternative)

Intersection #50 Hancock Ave & Murrieta Hot Springs Rd

Cycle (sec): 100 | Critical Vol./Cap.(X): 0.786
Loss Time (sec): 0 (Y+R=4.0 sec) | Average Delay (sec/veh): 18.0
Optimal Cycle: 106 | Level Of Service: B

Street Name:	Hancock Ave						Murrieta Hot Springs Rd					
Approach:	North Bound			South Bound			East Bound			West Bound		
Movement:	L -	T -	R	L -	T -	R	L -	T -	R	L -	T -	R
Control:	Protected			Protected			Protected			Protected		
Rights:	Include			Ovl			Include			Include		
Min. Green:	0	0	0	0	0	0	0	0	0	0	0	0
Lanes:	0 0	0 0	0	2 0	0 0	2	2 0	4 0	0	0 0	3 1	0
Volume Module:												
Base Vol:	0	0	0	398	0	652	708	1542	0	0	2617	548
Growth Adj:	1.00	1.00	1.00	1.00	1.00	1.00	1.00	1.00	1.00	1.00	1.00	1.00
Initial Bse:	0	0	0	398	0	652	708	1542	0	0	2617	548
Added Vol:	0	0	0	0	0	0	0	0	0	0	0	0
PasserByVol:	0	0	0	0	0	0	0	0	0	0	0	0
Initial Fut:	0	0	0	398	0	652	708	1542	0	0	2617	548
User Adj:	1.00	1.00	1.00	1.00	1.00	1.00	1.00	1.00	1.00	1.00	1.00	1.00
PHF Adj:	1.00	1.00	1.00	1.00	1.00	1.00	1.00	1.00	1.00	1.00	1.00	1.00
PHF Volume:	0	0	0	398	0	652	708	1542	0	0	2617	548
Reduct Vol:	0	0	0	0	0	0	0	0	0	0	0	0
Reduced Vol:	0	0	0	398	0	652	708	1542	0	0	2617	548
PCE Adj:	1.00	1.00	1.00	1.00	1.00	1.00	1.00	1.00	1.00	1.00	1.00	1.00
MLF Adj:	1.00	1.00	1.00	1.00	1.00	1.00	1.00	1.00	1.00	1.00	1.00	1.00
FinalVolume:	0	0	0	398	0	652	708	1542	0	0	2617	548
Saturation Flow Module:												
Sat/Lane:	1900	1900	1900	1900	1900	1900	1900	1900	1900	1900	1900	1900
Adjustment:	1.00	1.00	1.00	0.92	1.00	0.75	0.92	0.91	1.00	1.00	0.89	0.89
Lanes:	0.00	0.00	0.00	2.00	0.00	2.00	2.00	4.00	0.00	0.00	3.31	0.69
Final Sat.:	0	0	0	3502	0	2842	3502	6916	0	0	5570	1166
Capacity Analysis Module:												
Vol/Sat:	0.00	0.00	0.00	0.11	0.00	0.23	0.20	0.22	0.00	0.00	0.47	0.47
Crit Moves:				****			****				****	
Green/Cycle:	0.00	0.00	0.00	0.14	0.00	0.40	0.26	0.86	0.00	0.00	0.60	0.60
Volume/Cap:	0.00	0.00	0.00	0.79	0.00	0.57	0.79	0.26	0.00	0.00	0.79	0.79
Delay/Veh:	0.0	0.0	0.0	49.2	0.0	23.9	39.2	1.4	0.0	0.0	16.3	16.3
User DelAdj:	1.00	1.00	1.00	1.00	1.00	1.00	1.00	1.00	1.00	1.00	1.00	1.00
AdjDel/Veh:	0.0	0.0	0.0	49.2	0.0	23.9	39.2	1.4	0.0	0.0	16.3	16.3
LOS by Move:	A	A	A	D	A	C	D	A	A	A	B	B
HCM2kAvgQ:	0	0	0	8	0	9	12	3	0	0	22	22

Note: Queue reported is the number of cars per lane.

City of Murrieta General Plan
Future General Plan (Scenario B)
AM Peak Hour

Level Of Service Computation Report
2000 HCM Operations Method (Future Volume Alternative)

Intersection #51 Alta Murrieta Dr & Murrieta Hot Springs Rd

Cycle (sec): 100 | Critical Vol./Cap.(X): 0.615
Loss Time (sec): 0 (Y+R=4.0 sec) | Average Delay (sec/veh): 24.1
Optimal Cycle: 59 | Level Of Service: C

Street Name:	Alta Murrieta Dr						Murrieta Hot Springs Rd					
Approach:	North Bound			South Bound			East Bound			West Bound		
Movement:	L -	T -	R	L -	T -	R	L -	T -	R	L -	T -	R
Control:	Protected			Protected			Protected			Protected		
Rights:	Include			Include			Include			Ovl		
Min. Green:	0	0	0	0	0	0	0	0	0	0	0	0
Lanes:	2 0	1 0	1	2 0	1 1	0	2 0	2 1	0	2 0	4 0	1
Volume Module:												
Base Vol:	224	80	19	69	129	325	260	982	280	127	1900	166
Growth Adj:	1.00	1.00	1.00	1.00	1.00	1.00	1.00	1.00	1.00	1.00	1.00	1.00
Initial Bse:	224	80	19	69	129	325	260	982	280	127	1900	166
Added Vol:	0	0	0	0	0	0	0	0	0	0	0	0
PasserByVol:	0	0	0	0	0	0	0	0	0	0	0	0
Initial Fut:	224	80	19	69	129	325	260	982	280	127	1900	166
User Adj:	1.00	1.00	1.00	1.00	1.00	1.00	1.00	1.00	1.00	1.00	1.00	1.00
PHF Adj:	1.00	1.00	1.00	1.00	1.00	1.00	1.00	1.00	1.00	1.00	1.00	1.00
PHF Volume:	224	80	19	69	129	325	260	982	280	127	1900	166
Reduct Vol:	0	0	0	0	0	0	0	0	0	0	0	0
Reduced Vol:	224	80	19	69	129	325	260	982	280	127	1900	166
PCE Adj:	1.00	1.00	1.00	1.00	1.00	1.00	1.00	1.00	1.00	1.00	1.00	1.00
MLF Adj:	1.00	1.00	1.00	1.00	1.00	1.00	1.00	1.00	1.00	1.00	1.00	1.00
FinalVolume:	224	80	19	69	129	325	260	982	280	127	1900	166
Saturation Flow Module:												
Sat/Lane:	1900	1900	1900	1900	1900	1900	1900	1900	1900	1900	1900	1900
Adjustment:	0.92	1.00	0.85	0.92	0.85	0.85	0.92	0.88	0.88	0.92	0.91	0.85
Lanes:	2.00	1.00	1.00	2.00	1.00	1.00	2.00	2.33	0.67	2.00	4.00	1.00
Final Sat.:	3502	1900	1615	3502	1612	1612	3502	3903	1113	3502	6916	1615
Capacity Analysis Module:												
Vol/Sat:	0.06	0.04	0.01	0.02	0.08	0.20	0.07	0.25	0.25	0.04	0.27	0.10
Crit Moves:	****					****	****				****	
Green/Cycle:	0.10	0.29	0.29	0.14	0.33	0.33	0.12	0.50	0.50	0.07	0.45	0.58
Volume/Cap:	0.61	0.14	0.04	0.14	0.24	0.61	0.61	0.51	0.51	0.51	0.61	0.18
Delay/Veh:	46.0	26.1	25.2	38.1	24.6	29.8	44.4	17.1	17.1	46.4	21.5	9.7
User DelAdj:	1.00	1.00	1.00	1.00	1.00	1.00	1.00	1.00	1.00	1.00	1.00	1.00
AdjDel/Veh:	46.0	26.1	25.2	38.1	24.6	29.8	44.4	17.1	17.1	46.4	21.5	9.7
LOS by Move:	D	C	C	D	C	C	D	B	B	D	C	A
HCM2kAvgQ:	4	2	0	1	3	10	5	10	10	3	13	2

Note: Queue reported is the number of cars per lane.

City of Murrieta General Plan
Future General Plan (Scenario B)
AM Peak Hour

Level Of Service Computation Report
2000 HCM Operations Method (Future Volume Alternative)

Intersection #52 Winchester Road - SR-79 & Murrieta Hot Springs Rd

Cycle (sec): 100 | Critical Vol./Cap.(X): 1.370
Loss Time (sec): 0 (Y+R=4.0 sec) | Average Delay (sec/veh): 107.1
Optimal Cycle: 180 | Level Of Service: F

Street Name:	Winchester Road - SR-79						Murrieta Hot Springs Rd					
Approach:	North Bound			South Bound			East Bound			West Bound		
Movement:	L	T	R	L	T	R	L	T	R	L	T	R
Control:	Protected			Protected			Protected			Protected		
Rights:	Ovl			Include			Include			Include		
Min. Green:	0	0	0	0	0	0	0	0	0	0	0	0
Lanes:	2	0 3	0 1	2	0 3	0 1	2	0 3	0 1	2	0 2	1 0
Volume Module:												
Base Vol:	287	1481	151	154	1467	1400	809	276	103	281	894	81
Growth Adj:	1.00	1.00	1.00	1.00	1.00	1.00	1.00	1.00	1.00	1.00	1.00	1.00
Initial Bse:	287	1481	151	154	1467	1400	809	276	103	281	894	81
Added Vol:	0	0	0	0	0	0	0	0	0	0	0	0
PasserByVol:	0	0	0	0	0	0	0	0	0	0	0	0
Initial Fut:	287	1481	151	154	1467	1400	809	276	103	281	894	81
User Adj:	1.00	1.00	1.00	1.00	1.00	1.00	1.00	1.00	1.00	1.00	1.00	1.00
PHF Adj:	1.00	1.00	1.00	1.00	1.00	1.00	1.00	1.00	1.00	1.00	1.00	1.00
PHF Volume:	287	1481	151	154	1467	1400	809	276	103	281	894	81
Reduct Vol:	0	0	0	0	0	0	0	0	0	0	0	0
Reduced Vol:	287	1481	151	154	1467	1400	809	276	103	281	894	81
PCE Adj:	1.00	1.00	1.00	1.00	1.00	1.00	1.00	1.00	1.00	1.00	1.00	1.00
MLF Adj:	1.00	1.00	1.00	1.00	1.00	1.00	1.00	1.00	1.00	1.00	1.00	1.00
FinalVolume:	287	1481	151	154	1467	1400	809	276	103	281	894	81
Saturation Flow Module:												
Sat/Lane:	1900	1900	1900	1900	1900	1900	1900	1900	1900	1900	1900	1900
Adjustment:	0.92	0.91	0.85	0.92	0.91	0.85	0.92	0.91	0.85	0.92	0.90	0.90
Lanes:	2.00	3.00	1.00	2.00	3.00	1.00	2.00	3.00	1.00	2.00	2.75	0.25
Final Sat.:	3502	5187	1615	3502	5187	1615	3502	5187	1615	3502	4699	426
Capacity Analysis Module:												
Vol/Sat:	0.08	0.29	0.09	0.04	0.28	0.87	0.23	0.05	0.06	0.08	0.19	0.19
Crit Moves:	****					****	****				****	
Green/Cycle:	0.06	0.60	0.77	0.09	0.63	0.63	0.17	0.14	0.14	0.17	0.14	0.14
Volume/Cap:	1.37	0.48	0.12	0.48	0.45	1.37	1.37	0.39	0.47	0.47	1.37	1.37
Delay/Veh:	240.9	11.3	2.9	44.2	9.5	191.2	218.7	39.8	41.4	37.9	218	218.5
User DelAdj:	1.00	1.00	1.00	1.00	1.00	1.00	1.00	1.00	1.00	1.00	1.00	1.00
AdjDel/Veh:	240.9	11.3	2.9	44.2	9.5	191.2	218.7	39.8	41.4	37.9	218	218.5
LOS by Move:	F	B	A	D	A	F	F	D	D	D	F	F
HCM2kAvgQ:	12	9	1	3	8	90	29	3	3	4	25	25

Note: Queue reported is the number of cars per lane.

City of Murrieta General Plan
Future General Plan (Scenario B)
AM Peak Hour

Level Of Service Computation Report
2000 HCM Operations Method (Future Volume Alternative)

Intersection #53 Hancock Ave & Los Alamos Rd

Cycle (sec): 100 | Critical Vol./Cap.(X): 1.173
Loss Time (sec): 0 (Y+R=4.0 sec) | Average Delay (sec/veh): 83.2
Optimal Cycle: 180 | Level Of Service: F

Street Name:	Hancock Ave						Los Alamos Rd					
Approach:	North Bound			South Bound			East Bound			West Bound		
Movement:	L	T	R	L	T	R	L	T	R	L	T	R
Control:	Protected			Protected			Protected			Protected		
Rights:	Include			Include			Include			Include		
Min. Green:	0	0	0	0	0	0	0	0	0	0	0	0
Lanes:	1	0 1	1 0	2	0 0	1 0	1	0 1	1 0	1	0 1	1 0
Volume Module:												
Base Vol:	49	120	214	740	266	92	71	943	80	981	1687	600
Growth Adj:	1.00	1.00	1.00	1.00	1.00	1.00	1.00	1.00	1.00	1.00	1.00	1.00
Initial Bse:	49	120	214	740	266	92	71	943	80	981	1687	600
Added Vol:	0	0	0	0	0	0	0	0	0	0	0	0
PasserByVol:	0	0	0	0	0	0	0	0	0	0	0	0
Initial Fut:	49	120	214	740	266	92	71	943	80	981	1687	600
User Adj:	1.00	1.00	1.00	1.00	1.00	1.00	1.00	1.00	1.00	1.00	1.00	1.00
PHF Adj:	1.00	1.00	1.00	1.00	1.00	1.00	1.00	1.00	1.00	1.00	1.00	1.00
PHF Volume:	49	120	214	740	266	92	71	943	80	981	1687	600
Reduct Vol:	0	0	0	0	0	0	0	0	0	0	0	0
Reduced Vol:	49	120	214	740	266	92	71	943	80	981	1687	600
PCE Adj:	1.00	1.00	1.00	1.00	1.00	1.00	1.00	1.00	1.00	1.00	1.00	1.00
MLF Adj:	1.00	1.00	1.00	1.00	1.00	1.00	1.00	1.00	1.00	1.00	1.00	1.00
FinalVolume:	49	120	214	740	266	92	71	943	80	981	1687	600
Saturation Flow Module:												
Sat/Lane:	1900	1900	1900	1900	1900	1900	1900	1900	1900	1900	1900	1900
Adjustment:	0.95	0.86	0.86	0.92	0.96	0.96	0.95	0.94	0.94	0.95	0.91	0.91
Lanes:	1.00	1.00	1.00	2.00	0.74	0.26	1.00	1.84	0.16	1.00	1.48	0.52
Final Sat.:	1805	1632	1632	3502	1357	469	1805	3288	279	1805	2559	910
Capacity Analysis Module:												
Vol/Sat:	0.03	0.07	0.13	0.21	0.20	0.20	0.04	0.29	0.29	0.54	0.66	0.66
Crit Moves:			****	****				****		****		
Green/Cycle:	0.04	0.11	0.11	0.18	0.26	0.26	0.04	0.24	0.24	0.46	0.67	0.67
Volume/Cap:	0.76	0.66	1.17	1.17	0.76	0.76	0.99	1.17	1.17	1.17	0.99	0.99
Delay/Veh:	89.1	45.7	152.9	134.8	41.7	41.7	149.3	128	127.6	117.2	31.8	31.8
User DelAdj:	1.00	1.00	1.00	1.00	1.00	1.00	1.00	1.00	1.00	1.00	1.00	1.00
AdjDel/Veh:	89.1	45.7	152.9	134.8	41.7	41.7	149.3	128	127.6	117.2	31.8	31.8
LOS by Move:	F	D	F	F	D	D	F	F	F	F	C	C
HCM2kAvgQ:	3	5	14	22	12	12	5	29	29	51	44	44

Note: Queue reported is the number of cars per lane.

City of Murrieta General Plan
Future General Plan (Scenario B)
AM Peak Hour

Level Of Service Computation Report
2000 HCM Operations Method (Future Volume Alternative)

Intersection #54 I-215 SB Ramps & Los Alamos Rd

Cycle (sec): 100 | Critical Vol./Cap.(X): 1.104
Loss Time (sec): 0 (Y+R=4.0 sec) | Average Delay (sec/veh): 77.7
Optimal Cycle: 180 | Level Of Service: E

Street Name:	I-215 SB Ramps						Los Alamos Rd					
Approach:	North Bound			South Bound			East Bound			West Bound		
Movement:	L	T	R	L	T	R	L	T	R	L	T	R
Control:	Protected			Protected			Protected			Protected		
Rights:	Include			Include			Include			Include		
Min. Green:	0	0	0	0	0	0	0	0	0	0	0	0
Lanes:	0 0	0 0	0	1 0	1! 0	1	0 0	2 0	1	2 0	2 0	0
Volume Module:												
Base Vol:	0	0	0	397	0	2007	0	1348	464	236	1591	0
Growth Adj:	1.00	1.00	1.00	1.00	1.00	1.00	1.00	1.00	1.00	1.00	1.00	1.00
Initial Bse:	0	0	0	397	0	2007	0	1348	464	236	1591	0
Added Vol:	0	0	0	0	0	0	0	0	0	0	0	0
PasserByVol:	0	0	0	0	0	0	0	0	0	0	0	0
Initial Fut:	0	0	0	397	0	2007	0	1348	464	236	1591	0
User Adj:	1.00	1.00	1.00	1.00	1.00	1.00	1.00	1.00	1.00	1.00	1.00	1.00
PHF Adj:	1.00	1.00	1.00	1.00	1.00	1.00	1.00	1.00	1.00	1.00	1.00	1.00
PHF Volume:	0	0	0	397	0	2007	0	1348	464	236	1591	0
Reduct Vol:	0	0	0	0	0	0	0	0	0	0	0	0
Reduced Vol:	0	0	0	397	0	2007	0	1348	464	236	1591	0
PCE Adj:	1.00	1.00	1.00	1.00	1.00	1.00	1.00	1.00	1.00	1.00	1.00	1.00
MLF Adj:	1.00	1.00	1.00	1.00	1.00	1.00	1.00	1.00	1.00	1.00	1.00	1.00
FinalVolume:	0	0	0	397	0	2007	0	1348	464	236	1591	0
Saturation Flow Module:												
Sat/Lane:	1900	1900	1900	1900	1900	1900	1900	1900	1900	1900	1900	1900
Adjustment:	1.00	1.00	1.00	0.87	1.00	0.87	1.00	0.95	0.85	0.92	0.95	1.00
Lanes:	0.00	0.00	0.00	1.17	0.00	1.83	0.00	2.00	1.00	2.00	2.00	0.00
Final Sat.:	0	0	0	1922	0	3026	0	3610	1615	3502	3610	0
Capacity Analysis Module:												
Vol/Sat:	0.00	0.00	0.00	0.21	0.00	0.66	0.00	0.37	0.29	0.07	0.44	0.00
Crit Moves:						****		****		****		
Green/Cycle:	0.00	0.00	0.00	0.60	0.00	0.60	0.00	0.34	0.34	0.06	0.40	0.00
Volume/Cap:	0.00	0.00	0.00	0.34	0.00	1.10	0.00	1.10	0.85	1.10	1.10	0.00
Delay/Veh:	0.0	0.0	0.0	10.1	0.0	74.3	0.0	92.3	42.7	139.1	87.5	0.0
User DelAdj:	1.00	1.00	1.00	1.00	1.00	1.00	1.00	1.00	1.00	1.00	1.00	1.00
AdjDel/Veh:	0.0	0.0	0.0	10.1	0.0	74.3	0.0	92.3	42.7	139.1	87.5	0.0
LOS by Move:	A	A	A	B	A	E	A	F	D	F	F	A
HCM2kAvgQ:	0	0	0	5	0	50	0	34	16	8	40	0

Note: Queue reported is the number of cars per lane.

City of Murrieta General Plan
Future General Plan (Scenario B)
AM Peak Hour

Level Of Service Computation Report
2000 HCM Operations Method (Future Volume Alternative)

Intersection #55 I-215 NB Ramps & Los Alamos Rd

Cycle (sec): 100 | Critical Vol./Cap.(X): 0.813
Loss Time (sec): 0 (Y+R=4.0 sec) | Average Delay (sec/veh): 25.0
Optimal Cycle: 122 | Level Of Service: C

Street Name:	I-215 NB Ramps						Los Alamos Rd					
Approach:	North Bound			South Bound			East Bound			West Bound		
Movement:	L	T	R	L	T	R	L	T	R	L	T	R
Control:	Protected			Protected			Protected			Protected		
Rights:	Include			Include			Include			Include		
Min. Green:	0	0	0	0	0	0	0	0	0	0	0	0
Lanes:	1 0	0 0	1	0 0	0 0	0	2 0	3 0	0	0 0	2 0	1
Volume Module:												
Base Vol:	510	0	269	0	0	0	571	1169	0	0	1326	140
Growth Adj:	1.00	1.00	1.00	1.00	1.00	1.00	1.00	1.00	1.00	1.00	1.00	1.00
Initial Bse:	510	0	269	0	0	0	571	1169	0	0	1326	140
Added Vol:	0	0	0	0	0	0	0	0	0	0	0	0
PasserByVol:	0	0	0	0	0	0	0	0	0	0	0	0
Initial Fut:	510	0	269	0	0	0	571	1169	0	0	1326	140
User Adj:	1.00	1.00	1.00	1.00	1.00	1.00	1.00	1.00	1.00	1.00	1.00	1.00
PHF Adj:	1.00	1.00	1.00	1.00	1.00	1.00	1.00	1.00	1.00	1.00	1.00	1.00
PHF Volume:	510	0	269	0	0	0	571	1169	0	0	1326	140
Reduct Vol:	0	0	0	0	0	0	0	0	0	0	0	0
Reduced Vol:	510	0	269	0	0	0	571	1169	0	0	1326	140
PCE Adj:	1.00	1.00	1.00	1.00	1.00	1.00	1.00	1.00	1.00	1.00	1.00	1.00
MLF Adj:	1.00	1.00	1.00	1.00	1.00	1.00	1.00	1.00	1.00	1.00	1.00	1.00
FinalVolume:	510	0	269	0	0	0	571	1169	0	0	1326	140
Saturation Flow Module:												
Sat/Lane:	1900	1900	1900	1900	1900	1900	1900	1900	1900	1900	1900	1900
Adjustment:	0.95	1.00	0.85	1.00	1.00	1.00	0.92	0.91	1.00	1.00	0.95	0.85
Lanes:	1.00	0.00	1.00	0.00	0.00	0.00	2.00	3.00	0.00	0.00	2.00	1.00
Final Sat.:	1805	0	1615	0	0	0	3502	5187	0	0	3610	1615
Capacity Analysis Module:												
Vol/Sat:	0.28	0.00	0.17	0.00	0.00	0.00	0.16	0.23	0.00	0.00	0.37	0.09
Crit Moves:	****						****				****	
Green/Cycle:	0.35	0.00	0.35	0.00	0.00	0.00	0.20	0.65	0.00	0.00	0.45	0.45
Volume/Cap:	0.81	0.00	0.48	0.00	0.00	0.00	0.81	0.35	0.00	0.00	0.81	0.19
Delay/Veh:	37.6	0.0	26.2	0.0	0.0	0.0	45.4	7.9	0.0	0.0	27.0	16.6
User DelAdj:	1.00	1.00	1.00	1.00	1.00	1.00	1.00	1.00	1.00	1.00	1.00	1.00
AdjDel/Veh:	37.6	0.0	26.2	0.0	0.0	0.0	45.4	7.9	0.0	0.0	27.0	16.6
LOS by Move:	D	A	C	A	A	A	D	A	A	A	C	B
HCM2kAvgQ:	16	0	7	0	0	0	11	6	0	0	20	3

Note: Queue reported is the number of cars per lane.

City of Murrieta General Plan
Future General Plan (Scenario B)
AM Peak Hour

Level Of Service Computation Report
2000 HCM Operations Method (Future Volume Alternative)

Intersection #56 Whitewood Rd & Los Alamos Rd

Cycle (sec): 100 Critical Vol./Cap.(X): 0.938
Loss Time (sec): 0 (Y+R=4.0 sec) Average Delay (sec/veh): 40.2
Optimal Cycle: 180 Level Of Service: D

Street Name:	Whitewood Rd						Los Alamos Rd					
Approach:	North Bound			South Bound			East Bound			West Bound		
Movement:	L	T	R	L	T	R	L	T	R	L	T	R
Control:	Protected			Protected			Protected			Protected		
Rights:	Include			Include			Include			Include		
Min. Green:	0	0	0	0	0	0	0	0	0	0	0	0
Lanes:	1	0 1	1 0	1	0 2	0 1	1	0 2	0 1	1	0 1	1 0
Volume Module:												
Base Vol:	86	322	40	31	540	725	656	225	111	52	247	29
Growth Adj:	1.00	1.00	1.00	1.00	1.00	1.00	1.00	1.00	1.00	1.00	1.00	1.00
Initial Bse:	86	322	40	31	540	725	656	225	111	52	247	29
Added Vol:	0	0	0	0	0	0	0	0	0	0	0	0
PasserByVol:	0	0	0	0	0	0	0	0	0	0	0	0
Initial Fut:	86	322	40	31	540	725	656	225	111	52	247	29
User Adj:	1.00	1.00	1.00	1.00	1.00	1.00	1.00	1.00	1.00	1.00	1.00	1.00
PHF Adj:	1.00	1.00	1.00	1.00	1.00	1.00	1.00	1.00	1.00	1.00	1.00	1.00
PHF Volume:	86	322	40	31	540	725	656	225	111	52	247	29
Reduct Vol:	0	0	0	0	0	0	0	0	0	0	0	0
Reduced Vol:	86	322	40	31	540	725	656	225	111	52	247	29
PCE Adj:	1.00	1.00	1.00	1.00	1.00	1.00	1.00	1.00	1.00	1.00	1.00	1.00
MLF Adj:	1.00	1.00	1.00	1.00	1.00	1.00	1.00	1.00	1.00	1.00	1.00	1.00
FinalVolume:	86	322	40	31	540	725	656	225	111	52	247	29
Saturation Flow Module:												
Sat/Lane:	1900	1900	1900	1900	1900	1900	1900	1900	1900	1900	1900	1900
Adjustment:	0.95	0.93	0.93	0.95	0.95	0.85	0.95	0.95	0.85	0.95	0.93	0.93
Lanes:	1.00	1.78	0.22	1.00	2.00	1.00	1.00	2.00	1.00	1.00	1.79	0.21
Final Sat.:	1805	3160	393	1805	3610	1615	1805	3610	1615	1805	3179	373
Capacity Analysis Module:												
Vol/Sat:	0.05	0.10	0.10	0.02	0.15	0.45	0.36	0.06	0.07	0.03	0.08	0.08
Crit Moves:	****					****	****				****	
Green/Cycle:	0.05	0.45	0.45	0.08	0.48	0.48	0.39	0.33	0.33	0.14	0.08	0.08
Volume/Cap:	0.94	0.22	0.22	0.22	0.31	0.94	0.94	0.19	0.21	0.21	0.94	0.94
Delay/Veh:	120.8	16.7	16.7	44.2	16.1	43.5	49.7	23.9	24.2	38.6	81.8	81.8
User DelAdj:	1.00	1.00	1.00	1.00	1.00	1.00	1.00	1.00	1.00	1.00	1.00	1.00
AdjDel/Veh:	120.8	16.7	16.7	44.2	16.1	43.5	49.7	23.9	24.2	38.6	81.8	81.8
LOS by Move:	F	B	B	D	B	D	D	C	C	D	F	F
HCM2kAvgQ:	5	4	4	1	5	26	24	3	2	2	8	8

Note: Queue reported is the number of cars per lane.

City of Murrieta General Plan
Future General Plan (Scenario B)
AM Peak Hour

Level Of Service Computation Report
2000 HCM Operations Method (Future Volume Alternative)

Intersection #57 Whitewood Rd & Murrieta Hot Springs Rd

Cycle (sec): 100 Critical Vol./Cap.(X): 0.777
Loss Time (sec): 0 (Y+R=4.0 sec) Average Delay (sec/veh): 28.4
Optimal Cycle: 102 Level Of Service: C

Street Name:	Whitewood Rd						Murrieta Hot Springs Rd					
Approach:	North Bound			South Bound			East Bound			West Bound		
Movement:	L	T	R	L	T	R	L	T	R	L	T	R
Control:	Protected			Protected			Protected			Protected		
Rights:	Include			Include			Include			Include		
Min. Green:	0	0	0	0	0	0	0	0	0	0	0	0
Lanes:	1	0 1	1 0	1	0 1	1 0	1	0 2	1 0	1	0 2	1 0
Volume Module:												
Base Vol:	54	227	239	277	594	121	30	986	135	483	2115	144
Growth Adj:	1.00	1.00	1.00	1.00	1.00	1.00	1.00	1.00	1.00	1.00	1.00	1.00
Initial Bse:	54	227	239	277	594	121	30	986	135	483	2115	144
Added Vol:	0	0	0	0	0	0	0	0	0	0	0	0
PasserByVol:	0	0	0	0	0	0	0	0	0	0	0	0
Initial Fut:	54	227	239	277	594	121	30	986	135	483	2115	144
User Adj:	1.00	1.00	1.00	1.00	1.00	1.00	1.00	1.00	1.00	1.00	1.00	1.00
PHF Adj:	1.00	1.00	1.00	1.00	1.00	1.00	1.00	1.00	1.00	1.00	1.00	1.00
PHF Volume:	54	227	239	277	594	121	30	986	135	483	2115	144
Reduct Vol:	0	0	0	0	0	0	0	0	0	0	0	0
Reduced Vol:	54	227	239	277	594	121	30	986	135	483	2115	144
PCE Adj:	1.00	1.00	1.00	1.00	1.00	1.00	1.00	1.00	1.00	1.00	1.00	1.00
MLF Adj:	1.00	1.00	1.00	1.00	1.00	1.00	1.00	1.00	1.00	1.00	1.00	1.00
FinalVolume:	54	227	239	277	594	121	30	986	135	483	2115	144
Saturation Flow Module:												
Sat/Lane:	1900	1900	1900	1900	1900	1900	1900	1900	1900	1900	1900	1900
Adjustment:	0.95	0.88	0.88	0.95	0.93	0.93	0.95	0.89	0.89	0.95	0.90	0.90
Lanes:	1.00	1.00	1.00	1.00	1.66	0.34	1.00	2.64	0.36	1.00	2.81	0.19
Final Sat.:	1805	1666	1666	1805	2924	596	1805	4480	613	1805	4808	327
Capacity Analysis Module:												
Vol/Sat:	0.03	0.14	0.14	0.15	0.20	0.20	0.02	0.22	0.22	0.27	0.44	0.44
Crit Moves:		****		****				****		****		
Green/Cycle:	0.05	0.18	0.18	0.20	0.32	0.32	0.02	0.28	0.28	0.34	0.60	0.60
Volume/Cap:	0.63	0.78	0.82	0.78	0.63	0.63	0.73	0.78	0.78	0.78	0.73	0.73
Delay/Veh:	60.3	45.8	48.8	48.4	29.7	29.7	97.0	35.7	35.7	35.5	14.9	14.9
User DelAdj:	1.00	1.00	1.00	1.00	1.00	1.00	1.00	1.00	1.00	1.00	1.00	1.00
AdjDel/Veh:	60.3	45.8	48.8	48.4	29.7	29.7	97.0	35.7	35.7	35.5	14.9	14.9
LOS by Move:	E	D	D	D	C	C	F	D	D	D	B	B
HCM2kAvgQ:	3	9	10	10	10	10	2	13	13	15	19	19

Note: Queue reported is the number of cars per lane.

City of Murrieta General Plan
Future General Plan (Scenario B)
AM Peak Hour

Level Of Service Computation Report
2000 HCM Operations Method (Future Volume Alternative)

Intersection #59 Nutmeg St & Clinton Keith Rd

Cycle (sec): 100 Critical Vol./Cap.(X): 1.171
Loss Time (sec): 0 (Y+R=4.0 sec) Average Delay (sec/veh): 88.0
Optimal Cycle: 180 Level Of Service: F

Street Name:	Nutmeg St						Clinton Keith Rd					
Approach:	North Bound			South Bound			East Bound			West Bound		
Movement:	L	T	R	L	T	R	L	T	R	L	T	R
Control:	Protected			Protected			Protected			Protected		
Rights:	Include			Include			Include			Include		
Min. Green:	0	0	0	0	0	0	0	0	0	0	0	0
Lanes:	1	0 1	1 0	1	0 1	1 0	1	0 2	1 0	1	0 2	1 0
Volume Module:												
Base Vol:	75	44	497	424	57	72	46	1869	103	421	1467	167
Growth Adj:	1.00	1.00	1.00	1.00	1.00	1.00	1.00	1.00	1.00	1.00	1.00	1.00
Initial Bse:	75	44	497	424	57	72	46	1869	103	421	1467	167
Added Vol:	0	0	0	0	0	0	0	0	0	0	0	0
PasserByVol:	0	0	0	0	0	0	0	0	0	0	0	0
Initial Fut:	75	44	497	424	57	72	46	1869	103	421	1467	167
User Adj:	1.00	1.00	1.00	1.00	1.00	1.00	1.00	1.00	1.00	1.00	1.00	1.00
PHF Adj:	1.00	1.00	1.00	1.00	1.00	1.00	1.00	1.00	1.00	1.00	1.00	1.00
PHF Volume:	75	44	497	424	57	72	46	1869	103	421	1467	167
Reduct Vol:	0	0	0	0	0	0	0	0	0	0	0	0
Reduced Vol:	75	44	497	424	57	72	46	1869	103	421	1467	167
PCE Adj:	1.00	1.00	1.00	1.00	1.00	1.00	1.00	1.00	1.00	1.00	1.00	1.00
MLF Adj:	1.00	1.00	1.00	1.00	1.00	1.00	1.00	1.00	1.00	1.00	1.00	1.00
FinalVolume:	75	44	497	424	57	72	46	1869	103	421	1467	167
Saturation Flow Module:												
Sat/Lane:	1900	1900	1900	1900	1900	1900	1900	1900	1900	1900	1900	1900
Adjustment:	0.95	0.82	0.82	0.95	0.87	0.87	0.95	0.90	0.90	0.95	0.90	0.90
Lanes:	1.00	1.00	1.00	1.00	1.00	1.00	1.00	2.84	0.16	1.00	2.69	0.31
Final Sat.:	1805	1556	1556	1805	1653	1653	1805	4877	269	1805	4587	522
Capacity Analysis Module:												
Vol/Sat:	0.04	0.03	0.32	0.23	0.03	0.04	0.03	0.38	0.38	0.23	0.32	0.32
Crit Moves:			****	****				****		****		
Green/Cycle:	0.23	0.27	0.27	0.20	0.24	0.24	0.04	0.33	0.33	0.20	0.49	0.49
Volume/Cap:	0.18	0.10	1.17	1.17	0.14	0.18	0.66	1.17	1.17	1.17	0.66	0.66
Delay/Veh:	31.0	27.2	134.2	142.4	29.8	30.1	67.7	117	117.2	142.6	19.9	19.9
User DelAdj:	1.00	1.00	1.00	1.00	1.00	1.00	1.00	1.00	1.00	1.00	1.00	1.00
AdjDel/Veh:	31.0	27.2	134.2	142.4	29.8	30.1	67.7	117	117.2	142.6	19.9	19.9
LOS by Move:	C	C	F	F	C	C	E	F	F	F	B	B
HCM2kAvgQ:	2	1	29	24	1	2	3	38	38	24	14	14

Note: Queue reported is the number of cars per lane.

City of Murrieta General Plan
Future General Plan (Scenario B)
AM Peak Hour

Level Of Service Computation Report
2000 HCM Operations Method (Future Volume Alternative)

Intersection #60 Murrieta Oaks Ave-Mitchell Rd & Clinton Keith Rd

Cycle (sec): 100 Critical Vol./Cap.(X): 0.933
Loss Time (sec): 0 (Y+R=4.0 sec) Average Delay (sec/veh): 26.2
Optimal Cycle: 180 Level Of Service: C

Street Name:	Murrieta Oaks Ave-Mitchell Rd						Clinton Keith Rd					
Approach:	North Bound			South Bound			East Bound			West Bound		
Movement:	L	T	R	L	T	R	L	T	R	L	T	R
Control:	Protected			Protected			Protected			Protected		
Rights:	Include			Include			Include			Include		
Min. Green:	0	0	0	0	0	0	0	0	0	0	0	0
Lanes:	1	0 0	1 0	1	0 1	0 1	1	0 2	1 0	1	0 2	1 0
Volume Module:												
Base Vol:	105	208	106	40	121	339	140	2911	262	82	2191	351
Growth Adj:	1.00	1.00	1.00	1.00	1.00	1.00	1.00	1.00	1.00	1.00	1.00	1.00
Initial Bse:	105	208	106	40	121	339	140	2911	262	82	2191	351
Added Vol:	0	0	0	0	0	0	0	0	0	0	0	0
PasserByVol:	0	0	0	0	0	0	0	0	0	0	0	0
Initial Fut:	105	208	106	40	121	339	140	2911	262	82	2191	351
User Adj:	1.00	1.00	1.00	1.00	1.00	1.00	1.00	1.00	1.00	1.00	1.00	1.00
PHF Adj:	1.00	1.00	1.00	1.00	1.00	1.00	1.00	1.00	1.00	1.00	1.00	1.00
PHF Volume:	105	208	106	40	121	339	140	2911	262	82	2191	351
Reduct Vol:	0	0	0	0	0	0	0	0	0	0	0	0
Reduced Vol:	105	208	106	40	121	339	140	2911	262	82	2191	351
PCE Adj:	1.00	1.00	1.00	1.00	1.00	1.00	1.00	1.00	1.00	1.00	1.00	1.00
MLF Adj:	1.00	1.00	1.00	1.00	1.00	1.00	1.00	1.00	1.00	1.00	1.00	1.00
FinalVolume:	105	208	106	40	121	339	140	2911	262	82	2191	351
Saturation Flow Module:												
Sat/Lane:	1900	1900	1900	1900	1900	1900	1900	1900	1900	1900	1900	1900
Adjustment:	0.95	0.95	0.95	0.95	1.00	0.85	0.95	0.90	0.90	0.95	0.89	0.89
Lanes:	1.00	0.66	0.34	1.00	1.00	1.00	1.00	2.75	0.25	1.00	2.59	0.41
Final Sat.:	1805	1194	609	1805	1900	1615	1805	4702	423	1805	4377	701
Capacity Analysis Module:												
Vol/Sat:	0.06	0.17	0.17	0.02	0.06	0.21	0.08	0.62	0.62	0.05	0.50	0.50
Crit Moves:	****					****		****		****		
Green/Cycle:	0.06	0.25	0.25	0.03	0.23	0.23	0.10	0.66	0.66	0.05	0.62	0.62
Volume/Cap:	0.93	0.68	0.68	0.68	0.28	0.93	0.81	0.93	0.93	0.93	0.81	0.81
Delay/Veh:	110.4	37.8	37.8	76.2	32.4	68.5	68.7	20.4	20.4	121.1	16.4	16.4
User DelAdj:	1.00	1.00	1.00	1.00	1.00	1.00	1.00	1.00	1.00	1.00	1.00	1.00
AdjDel/Veh:	110.4	37.8	37.8	76.2	32.4	68.5	68.7	20.4	20.4	121.1	16.4	16.4
LOS by Move:	F	D	D	E	C	E	E	C	C	F	B	B
HCM2kAvgQ:	6	10	10	2	3	14	6	36	36	5	24	24

Note: Queue reported is the number of cars per lane.

City of Murrieta General Plan
Future General Plan (Scenario B)
AM Peak Hour

Level Of Service Computation Report
2000 HCM Operations Method (Future Volume Alternative)

Intersection #61 I-215 SB Ramps & Scott Rd

Cycle (sec): 100 | Critical Vol./Cap.(X): 0.239
Loss Time (sec): 0 (Y+R=4.0 sec) | Average Delay (sec/veh): 7.6
Optimal Cycle: 30 | Level Of Service: A

Street Name:	I-215 SB Ramps						Scott Rd					
Approach:	North Bound			South Bound			East Bound			West Bound		
Movement:	L	T	R	L	T	R	L	T	R	L	T	R
Control:	Protected			Protected			Protected			Protected		
Rights:	Include			Include			Ignore			Ignore		
Min. Green:	0	0	0	0	0	0	0	0	0	0	0	0
Lanes:	0	0	0 0	2	0	0 0 2	0	0	4 0 1	0	0	3 0 2
Volume Module:												
Base Vol:	0	0	0	210	0	123	0	1031	430	0	929	338
Growth Adj:	1.00	1.00	1.00	1.00	1.00	1.00	1.00	1.00	1.00	1.00	1.00	1.00
Initial Bse:	0	0	0	210	0	123	0	1031	430	0	929	338
Added Vol:	0	0	0	0	0	0	0	0	0	0	0	0
PasserByVol:	0	0	0	0	0	0	0	0	0	0	0	0
Initial Fut:	0	0	0	210	0	123	0	1031	430	0	929	338
User Adj:	1.00	1.00	1.00	1.00	1.00	1.00	1.00	1.00	0.00	1.00	1.00	0.00
PHF Adj:	1.00	1.00	1.00	1.00	1.00	1.00	1.00	1.00	0.00	1.00	1.00	0.00
PHF Volume:	0	0	0	210	0	123	0	1031	0	0	929	0
Reduct Vol:	0	0	0	0	0	0	0	0	0	0	0	0
Reduced Vol:	0	0	0	210	0	123	0	1031	0	0	929	0
PCE Adj:	1.00	1.00	1.00	1.00	1.00	1.00	1.00	1.00	0.00	1.00	1.00	0.00
MLF Adj:	1.00	1.00	1.00	1.00	1.00	1.00	1.00	1.00	0.00	1.00	1.00	0.00
FinalVolume:	0	0	0	210	0	123	0	1031	0	0	929	0
Saturation Flow Module:												
Sat/Lane:	1900	1900	1900	1900	1900	1900	1900	1900	1900	1900	1900	1900
Adjustment:	1.00	1.00	1.00	0.92	1.00	0.75	1.00	0.91	1.00	1.00	0.91	0.88
Lanes:	0.00	0.00	0.00	2.00	0.00	2.00	0.00	4.00	1.00	0.00	3.00	2.00
Final Sat.:	0	0	0	3502	0	2842	0	6916	1900	0	5187	3344
Capacity Analysis Module:												
Vol/Sat:	0.00	0.00	0.00	0.06	0.00	0.04	0.00	0.15	0.00	0.00	0.18	0.00
Crit Moves:				****			****				****	
Green/Cycle:	0.00	0.00	0.00	0.25	0.00	0.25	0.00	0.75	0.00	0.00	0.75	0.00
Volume/Cap:	0.00	0.00	0.00	0.24	0.00	0.17	0.00	0.20	0.00	0.00	0.24	0.00
Delay/Veh:	0.0	0.0	0.0	30.0	0.0	29.4	0.0	3.7	0.0	0.0	3.9	0.0
User DelAdj:	1.00	1.00	1.00	1.00	1.00	1.00	1.00	1.00	1.00	1.00	1.00	1.00
AdjDel/Veh:	0.0	0.0	0.0	30.0	0.0	29.4	0.0	3.7	0.0	0.0	3.9	0.0
LOS by Move:	A	A	A	C	A	C	A	A	A	A	A	A
HCM2kAvgQ:	0	0	0	3	0	2	0	3	0	0	3	0

Note: Queue reported is the number of cars per lane.

City of Murrieta General Plan
Future General Plan (Scenario B)
AM Peak Hour

Level Of Service Computation Report
2000 HCM Operations Method (Future Volume Alternative)

Intersection #62 I-215 NB Ramps & Scott Rd

Cycle (sec): 100 | Critical Vol./Cap.(X): 0.391
Loss Time (sec): 0 (Y+R=4.0 sec) | Average Delay (sec/veh): 15.8
Optimal Cycle: 37 | Level Of Service: B

Street Name:	I-215 NB Ramps						Scott Rd					
Approach:	North Bound			South Bound			East Bound			West Bound		
Movement:	L	T	R	L	T	R	L	T	R	L	T	R
Control:	Protected			Protected			Protected			Protected		
Rights:	Include			Include			Include			Ovl		
Min. Green:	0	0	0	0	0	0	0	0	0	0	0	0
Lanes:	0	0	0 1 2	0	0	0 0 2	2	0	4 0 0	0	0	3 0 2
Volume Module:												
Base Vol:	0	15	615	0	0	281	155	1192	0	0	1036	329
Growth Adj:	1.00	1.00	1.00	1.00	1.00	1.00	1.00	1.00	1.00	1.00	1.00	1.00
Initial Bse:	0	15	615	0	0	281	155	1192	0	0	1036	329
Added Vol:	0	0	0	0	0	0	0	0	0	0	0	0
PasserByVol:	0	0	0	0	0	0	0	0	0	0	0	0
Initial Fut:	0	15	615	0	0	281	155	1192	0	0	1036	329
User Adj:	1.00	1.00	1.00	1.00	1.00	1.00	1.00	1.00	1.00	1.00	1.00	1.00
PHF Adj:	1.00	1.00	1.00	1.00	1.00	1.00	1.00	1.00	1.00	1.00	1.00	1.00
PHF Volume:	0	15	615	0	0	281	155	1192	0	0	1036	329
Reduct Vol:	0	0	0	0	0	0	0	0	0	0	0	0
Reduced Vol:	0	15	615	0	0	281	155	1192	0	0	1036	329
PCE Adj:	1.00	1.00	1.00	1.00	1.00	1.00	1.00	1.00	1.00	1.00	1.00	1.00
MLF Adj:	1.00	1.00	1.00	1.00	1.00	1.00	1.00	1.00	1.00	1.00	1.00	1.00
FinalVolume:	0	15	615	0	0	281	155	1192	0	0	1036	329
Saturation Flow Module:												
Sat/Lane:	1900	1900	1900	1900	1900	1900	1900	1900	1900	1900	1900	1900
Adjustment:	1.00	0.85	0.75	1.00	1.00	0.75	0.92	0.91	1.00	1.00	0.91	0.75
Lanes:	0.00	0.06	2.94	0.00	0.00	2.00	2.00	4.00	0.00	0.00	3.00	2.00
Final Sat.:	0	102	4194	0	0	2842	3502	6916	0	0	5187	2842
Capacity Analysis Module:												
Vol/Sat:	0.00	0.15	0.15	0.00	0.00	0.10	0.04	0.17	0.00	0.00	0.20	0.12
Crit Moves:		****		****			****				****	
Green/Cycle:	0.00	0.38	0.38	0.00	0.00	0.38	0.11	0.62	0.00	0.00	0.51	0.51
Volume/Cap:	0.00	0.39	0.39	0.00	0.00	0.26	0.39	0.28	0.00	0.00	0.39	0.23
Delay/Veh:	0.0	23.0	23.0	0.0	0.0	21.8	41.8	8.5	0.0	0.0	15.0	13.6
User DelAdj:	1.00	1.00	1.00	1.00	1.00	1.00	1.00	1.00	1.00	1.00	1.00	1.00
AdjDel/Veh:	0.0	23.0	23.0	0.0	0.0	21.8	41.8	8.5	0.0	0.0	15.0	13.6
LOS by Move:	A	C	C	A	A	C	D	A	A	A	B	B
HCM2kAvgQ:	0	5	5	0	0	3	3	5	0	0	7	3

Note: Queue reported is the number of cars per lane.

City of Murrieta General Plan
Future General Plan (Scenario B)
AM Peak Hour

Level Of Service Computation Report
2000 HCM Operations Method (Future Volume Alternative)

Intersection #102 Leon Road & Scott Road

Cycle (sec): 100 Critical Vol./Cap.(X): 0.696
Loss Time (sec): 0 (Y+R=4.0 sec) Average Delay (sec/veh): 28.6
Optimal Cycle: 75 Level Of Service: C

Street Name:	Leon Road						Scott Road					
Approach:	North Bound			South Bound			East Bound			West Bound		
Movement:	L - T - R			L - T - R			L - T - R			L - T - R		
Control:	Protected			Protected			Protected			Protected		
Rights:	Include			Include			Include			Include		
Min. Green:	0	0	0	0	0	0	0	0	0	0	0	0
Lanes:	1 0	1 1	0	1 0	1 1	0	1 0	2 1	0	1 0	2 1	0
Volume Module:												
Base Vol:	119	204	2	98	340	516	382	482	434	10	372	146
Growth Adj:	1.00	1.00	1.00	1.00	1.00	1.00	1.00	1.00	1.00	1.00	1.00	1.00
Initial Bse:	119	204	2	98	340	516	382	482	434	10	372	146
Added Vol:	0	0	0	0	0	0	0	0	0	0	0	0
PasserByVol:	0	0	0	0	0	0	0	0	0	0	0	0
Initial Fut:	119	204	2	98	340	516	382	482	434	10	372	146
User Adj:	1.00	1.00	1.00	1.00	1.00	1.00	1.00	1.00	1.00	1.00	1.00	1.00
PHF Adj:	1.00	1.00	1.00	1.00	1.00	1.00	1.00	1.00	1.00	1.00	1.00	1.00
PHF Volume:	119	204	2	98	340	516	382	482	434	10	372	146
Reduct Vol:	0	0	0	0	0	0	0	0	0	0	0	0
Reduced Vol:	119	204	2	98	340	516	382	482	434	10	372	146
PCE Adj:	1.00	1.00	1.00	1.00	1.00	1.00	1.00	1.00	1.00	1.00	1.00	1.00
MLF Adj:	1.00	1.00	1.00	1.00	1.00	1.00	1.00	1.00	1.00	1.00	1.00	1.00
FinalVolume:	119	204	2	98	340	516	382	482	434	10	372	146
Saturation Flow Module:												
Sat/Lane:	1900	1900	1900	1900	1900	1900	1900	1900	1900	1900	1900	1900
Adjustment:	0.95	0.95	0.95	0.95	0.86	0.86	0.95	0.85	0.85	0.95	0.87	0.87
Lanes:	1.00	1.98	0.02	1.00	1.00	1.00	1.00	2.00	1.00	1.00	2.15	0.85
Final Sat.:	1805	3571	35	1805	1643	1643	1805	3212	1606	1805	3569	1401
Capacity Analysis Module:												
Vol/Sat:	0.07	0.06	0.06	0.05	0.21	0.31	0.21	0.15	0.27	0.01	0.10	0.10
Crit Moves:	****					****	****				****	
Green/Cycle:	0.09	0.28	0.28	0.27	0.45	0.45	0.30	0.44	0.44	0.01	0.15	0.15
Volume/Cap:	0.70	0.20	0.20	0.20	0.46	0.70	0.70	0.34	0.61	0.61	0.70	0.70
Delay/Veh:	55.7	27.6	27.6	28.7	19.2	23.7	34.6	18.2	21.8	100.8	43.2	43.2
User DelAdj:	1.00	1.00	1.00	1.00	1.00	1.00	1.00	1.00	1.00	1.00	1.00	1.00
AdjDel/Veh:	55.7	27.6	27.6	28.7	19.2	23.7	34.6	18.2	21.8	100.8	43.2	43.2
LOS by Move:	E	C	C	C	B	C	C	B	C	F	D	D
HCM2kAvgQ:	5	3	3	2	8	14	11	5	12	1	7	7

Note: Queue reported is the number of cars per lane.

City of Murrieta General Plan
Future General Plan (Scenario B)
AM Peak Hour

Level Of Service Computation Report
2000 HCM Operations Method (Future Volume Alternative)

Intersection #104 Antelope Road & Keller Road

Cycle (sec): 100 Critical Vol./Cap.(X): 1.409
Loss Time (sec): 0 (Y+R=4.0 sec) Average Delay (sec/veh): 130.8
Optimal Cycle: 180 Level Of Service: F

Street Name:	Antelope Road						Keller Road					
Approach:	North Bound			South Bound			East Bound			West Bound		
Movement:	L - T - R			L - T - R			L - T - R			L - T - R		
Control:	Protected			Protected			Protected			Protected		
Rights:	Include			Include			Include			Include		
Min. Green:	0	0	0	0	0	0	0	0	0	0	0	0
Lanes:	2 0	2 0	1	1 0	2 0	1	2 0	3 0	1	1 0	3 0	1
Volume Module:												
Base Vol:	110	75	445	197	479	447	453	687	1048	677	509	31
Growth Adj:	1.00	1.00	1.00	1.00	1.00	1.00	1.00	1.00	1.00	1.00	1.00	1.00
Initial Bse:	110	75	445	197	479	447	453	687	1048	677	509	31
Added Vol:	0	0	0	0	0	0	0	0	0	0	0	0
PasserByVol:	0	0	0	0	0	0	0	0	0	0	0	0
Initial Fut:	110	75	445	197	479	447	453	687	1048	677	509	31
User Adj:	1.00	1.00	1.00	1.00	1.00	1.00	1.00	1.00	1.00	1.00	1.00	1.00
PHF Adj:	1.00	1.00	1.00	1.00	1.00	1.00	1.00	1.00	1.00	1.00	1.00	1.00
PHF Volume:	110	75	445	197	479	447	453	687	1048	677	509	31
Reduct Vol:	0	0	0	0	0	0	0	0	0	0	0	0
Reduced Vol:	110	75	445	197	479	447	453	687	1048	677	509	31
PCE Adj:	1.00	1.00	1.00	1.00	1.00	1.00	1.00	1.00	1.00	1.00	1.00	1.00
MLF Adj:	1.00	1.00	1.00	1.00	1.00	1.00	1.00	1.00	1.00	1.00	1.00	1.00
FinalVolume:	110	75	445	197	479	447	453	687	1048	677	509	31
Saturation Flow Module:												
Sat/Lane:	1900	1900	1900	1900	1900	1900	1900	1900	1900	1900	1900	1900
Adjustment:	0.92	0.95	0.85	0.95	0.95	0.85	0.92	0.91	0.85	0.95	0.91	0.85
Lanes:	2.00	2.00	1.00	1.00	2.00	1.00	2.00	3.00	1.00	1.00	3.00	1.00
Final Sat.:	3502	3610	1615	1805	3610	1615	3502	5187	1615	1805	5187	1615
Capacity Analysis Module:												
Vol/Sat:	0.03	0.02	0.28	0.11	0.13	0.28	0.13	0.13	0.65	0.38	0.10	0.02
Crit Moves:			****	****					****	****		
Green/Cycle:	0.03	0.20	0.20	0.08	0.25	0.25	0.41	0.46	0.46	0.27	0.31	0.31
Volume/Cap:	1.13	0.11	1.41	1.41	0.54	1.13	0.31	0.29	1.41	1.41	0.31	0.06
Delay/Veh:	178.6	33.1	242.0	267.0	33.5	122.7	19.9	16.8	218.9	232.7	26.2	24.1
User DelAdj:	1.00	1.00	1.00	1.00	1.00	1.00	1.00	1.00	1.00	1.00	1.00	1.00
AdjDel/Veh:	178.6	33.1	242.0	267.0	33.5	122.7	19.9	16.8	218.9	232.7	26.2	24.1
LOS by Move:	F	C	F	F	C	F	B	B	F	F	C	C
HCM2kAvgQ:	5	1	31	15	7	24	5	5	70	46	4	1

Note: Queue reported is the number of cars per lane.

City of Murrieta General Plan
Future General Plan (Scenario B)
AM Peak Hour

Level Of Service Computation Report
2000 HCM Operations Method (Future Volume Alternative)

Intersection #105 Menifee Road - Meadowlark Road & Keller Road

Cycle (sec): 100 Critical Vol./Cap.(X): 0.994
Loss Time (sec): 0 (Y+R=4.0 sec) Average Delay (sec/veh): 45.1
Optimal Cycle: 180 Level Of Service: D

Street Name:	Menifee Road - Meadowlark Road						Keller Road					
Approach:	North Bound			South Bound			East Bound			West Bound		
Movement:	L -	T -	R	L -	T -	R	L -	T -	R	L -	T -	R
Control:	Protected			Protected			Protected			Protected		
Rights:	Include			Include			Include			Include		
Min. Green:	0	0	0	0	0	0	0	0	0	0	0	0
Lanes:	1 0	1	1 0	1 0	1	1 0	2 0	1	1 0	1 0	1	1 0
Volume Module:												
Base Vol:	28	289	292	126	1138	656	527	192	502	255	377	128
Growth Adj:	1.00	1.00	1.00	1.00	1.00	1.00	1.00	1.00	1.00	1.00	1.00	1.00
Initial Bse:	28	289	292	126	1138	656	527	192	502	255	377	128
Added Vol:	0	0	0	0	0	0	0	0	0	0	0	0
PasserByVol:	0	0	0	0	0	0	0	0	0	0	0	0
Initial Fut:	28	289	292	126	1138	656	527	192	502	255	377	128
User Adj:	1.00	1.00	1.00	1.00	1.00	1.00	1.00	1.00	1.00	1.00	1.00	1.00
PHF Adj:	1.00	1.00	1.00	1.00	1.00	1.00	1.00	1.00	1.00	1.00	1.00	1.00
PHF Volume:	28	289	292	126	1138	656	527	192	502	255	377	128
Reduct Vol:	0	0	0	0	0	0	0	0	0	0	0	0
Reduced Vol:	28	289	292	126	1138	656	527	192	502	255	377	128
PCE Adj:	1.00	1.00	1.00	1.00	1.00	1.00	1.00	1.00	1.00	1.00	1.00	1.00
MLF Adj:	1.00	1.00	1.00	1.00	1.00	1.00	1.00	1.00	1.00	1.00	1.00	1.00
FinalVolume:	28	289	292	126	1138	656	527	192	502	255	377	128
Saturation Flow Module:												
Sat/Lane:	1900	1900	1900	1900	1900	1900	1900	1900	1900	1900	1900	1900
Adjustment:	0.95	0.88	0.88	0.95	0.90	0.90	0.92	0.85	0.85	0.95	0.91	0.91
Lanes:	1.00	1.00	1.00	1.00	1.27	0.73	2.00	1.00	1.00	1.00	1.49	0.51
Final Sat.:	1805	1670	1670	1805	2164	1247	3502	1610	1610	1805	2593	880
Capacity Analysis Module:												
Vol/Sat:	0.02	0.17	0.17	0.07	0.53	0.53	0.15	0.12	0.31	0.14	0.15	0.15
Crit Moves:	****				****				****	****		
Green/Cycle:	0.02	0.39	0.39	0.16	0.53	0.53	0.23	0.31	0.31	0.14	0.22	0.22
Volume/Cap:	0.99	0.44	0.45	0.45	0.99	0.99	0.65	0.38	0.99	0.99	0.65	0.65
Delay/Veh:	216.4	22.8	22.9	39.5	43.2	43.2	36.6	26.9	66.8	97.4	37.2	37.2
User DelAdj:	1.00	1.00	1.00	1.00	1.00	1.00	1.00	1.00	1.00	1.00	1.00	1.00
AdjDel/Veh:	216.4	22.8	22.9	39.5	43.2	43.2	36.6	26.9	66.8	97.4	37.2	37.2
LOS by Move:	F	C	C	D	D	D	D	C	E	F	D	D
HCM2kAvgQ:	3	7	7	4	37	37	9	5	23	13	8	8

Note: Queue reported is the number of cars per lane.

City of Murrieta General Plan
Future General Plan (Scenario B)
AM Peak Hour

Level Of Service Computation Report
2000 HCM Operations Method (Future Volume Alternative)

Intersection #107 Leon Road & Keller Road

Cycle (sec): 100 Critical Vol./Cap.(X): 0.342
Loss Time (sec): 0 (Y+R=4.0 sec) Average Delay (sec/veh): 13.7
Optimal Cycle: 29 Level Of Service: B

Street Name:	Leon Road						Keller Road					
Approach:	North Bound			South Bound			East Bound			West Bound		
Movement:	L -	T -	R	L -	T -	R	L -	T -	R	L -	T -	R
Control:	Protected			Permitted			Protected			Permitted		
Rights:	Include			Include			Include			Include		
Min. Green:	0	0	0	0	0	0	0	0	0	0	0	0
Lanes:	1 0	1	1 0	1 0	1	1 0	1 0	1	1 0	1 0	1	1 0
Volume Module:												
Base Vol:	112	351	16	3	709	138	3	64	121	7	65	5
Growth Adj:	1.00	1.00	1.00	1.00	1.00	1.00	1.00	1.00	1.00	1.00	1.00	1.00
Initial Bse:	112	351	16	3	709	138	3	64	121	7	65	5
Added Vol:	0	0	0	0	0	0	0	0	0	0	0	0
PasserByVol:	0	0	0	0	0	0	0	0	0	0	0	0
Initial Fut:	112	351	16	3	709	138	3	64	121	7	65	5
User Adj:	1.00	1.00	1.00	1.00	1.00	1.00	1.00	1.00	1.00	1.00	1.00	1.00
PHF Adj:	1.00	1.00	1.00	1.00	1.00	1.00	1.00	1.00	1.00	1.00	1.00	1.00
PHF Volume:	112	351	16	3	709	138	3	64	121	7	65	5
Reduct Vol:	0	0	0	0	0	0	0	0	0	0	0	0
Reduced Vol:	112	351	16	3	709	138	3	64	121	7	65	5
PCE Adj:	1.00	1.00	1.00	1.00	1.00	1.00	1.00	1.00	1.00	1.00	1.00	1.00
MLF Adj:	1.00	1.00	1.00	1.00	1.00	1.00	1.00	1.00	1.00	1.00	1.00	1.00
FinalVolume:	112	351	16	3	709	138	3	64	121	7	65	5
Saturation Flow Module:												
Sat/Lane:	1900	1900	1900	1900	1900	1900	1900	1900	1900	1900	1900	1900
Adjustment:	0.95	0.94	0.94	0.52	0.93	0.93	0.95	0.86	0.86	0.74	0.94	0.94
Lanes:	1.00	1.91	0.09	1.00	1.67	0.33	1.00	1.00	1.00	1.00	1.86	0.14
Final Sat.:	1805	3428	156	982	2949	574	1805	1628	1628	1400	3315	255
Capacity Analysis Module:												
Vol/Sat:	0.06	0.10	0.10	0.00	0.24	0.24	0.00	0.04	0.07	0.00	0.02	0.02
Crit Moves:	****				****			****				
Green/Cycle:	0.17	0.84	0.84	0.67	0.67	0.67	0.11	0.16	0.16	0.05	0.05	0.05
Volume/Cap:	0.36	0.12	0.12	0.00	0.36	0.36	0.02	0.24	0.46	0.09	0.36	0.36
Delay/Veh:	37.3	1.5	1.5	5.6	7.5	7.5	39.8	36.6	38.7	45.5	46.8	46.8
User DelAdj:	1.00	1.00	1.00	1.00	1.00	1.00	1.00	1.00	1.00	1.00	1.00	1.00
AdjDel/Veh:	37.3	1.5	1.5	5.6	7.5	7.5	39.8	36.6	38.7	45.5	46.8	46.8
LOS by Move:	D	A	A	A	A	A	D	D	D	D	D	D
HCM2kAvgQ:	3	1	1	0	6	6	0	2	4	0	2	2

Note: Queue reported is the number of cars per lane.

City of Murrieta General Plan
Future General Plan (Scenario B)
AM Peak Hour

Level Of Service Computation Report
2000 HCM Operations Method (Future Volume Alternative)

Intersection #108 Winchester Road - SR-79 & Keller Road

Cycle (sec): 100 | Critical Vol./Cap.(X): 0.547
Loss Time (sec): 0 (Y+R=4.0 sec) | Average Delay (sec/veh): 1.5
Optimal Cycle: 41 | Level Of Service: A

Street Name:	Winchester Road - SR-79						Keller Road					
Approach:	North Bound			South Bound			East Bound			West Bound		
Movement:	L -	T -	R	L -	T -	R	L -	T -	R	L -	T -	R
Control:	Protected			Protected			Permitted			Permitted		
Rights:	Include			Include			Include			Include		
Min. Green:	0	0	0	0	0	0	0	0	0	0	0	0
Lanes:	1 0	2 1	0	1 0	2 1	0	1 0	1 1	0	1 0	1 1	0
Volume Module:												
Base Vol:	1	1563	26	5	2680	3	1	12	1	12	19	47
Growth Adj:	1.00	1.00	1.00	1.00	1.00	1.00	1.00	1.00	1.00	1.00	1.00	1.00
Initial Bse:	1	1563	26	5	2680	3	1	12	1	12	19	47
Added Vol:	0	0	0	0	0	0	0	0	0	0	0	0
PasserByVol:	0	0	0	0	0	0	0	0	0	0	0	0
Initial Fut:	1	1563	26	5	2680	3	1	12	1	12	19	47
User Adj:	1.00	1.00	1.00	1.00	1.00	1.00	1.00	1.00	1.00	1.00	1.00	1.00
PHF Adj:	1.00	1.00	1.00	1.00	1.00	1.00	1.00	1.00	1.00	1.00	1.00	1.00
PHF Volume:	1	1563	26	5	2680	3	1	12	1	12	19	47
Reduct Vol:	0	0	0	0	0	0	0	0	0	0	0	0
Reduced Vol:	1	1563	26	5	2680	3	1	12	1	12	19	47
PCE Adj:	1.00	1.00	1.00	1.00	1.00	1.00	1.00	1.00	1.00	1.00	1.00	1.00
MLF Adj:	1.00	1.00	1.00	1.00	1.00	1.00	1.00	1.00	1.00	1.00	1.00	1.00
FinalVolume:	1	1563	26	5	2680	3	1	12	1	12	19	47
Saturation Flow Module:												
Sat/Lane:	1900	1900	1900	1900	1900	1900	1900	1900	1900	1900	1900	1900
Adjustment:	0.95	0.91	0.91	0.95	0.91	0.91	0.75	0.94	0.94	0.75	0.85	0.85
Lanes:	1.00	2.95	0.05	1.00	2.99	0.01	1.00	1.85	0.15	1.00	1.00	1.00
Final Sat.:	1805	5092	85	1805	5181	6	1425	3292	274	1425	1612	1612
Capacity Analysis Module:												
Vol/Sat:	0.00	0.31	0.31	0.00	0.52	0.52	0.00	0.00	0.00	0.01	0.01	0.03
Crit Moves:	****				****							****
Green/Cycle:	0.00	0.94	0.94	0.01	0.95	0.95	0.05	0.05	0.05	0.05	0.05	0.05
Volume/Cap:	0.55	0.33	0.33	0.33	0.55	0.55	0.01	0.07	0.07	0.16	0.22	0.55
Delay/Veh:	234.2	0.3	0.3	61.4	0.4	0.4	44.9	45.1	45.1	46.2	45.7	51.3
User DelAdj:	1.00	1.00	1.00	1.00	1.00	1.00	1.00	1.00	1.00	1.00	1.00	1.00
AdjDel/Veh:	234.2	0.3	0.3	61.4	0.4	0.4	44.9	45.1	45.1	46.2	45.7	51.3
LOS by Move:	F	A	A	E	A	A	D	D	D	D	D	D
HCM2kAvgQ:	0	2	2	1	4	4	0	0	0	1	1	2

Note: Queue reported is the number of cars per lane.

City of Murrieta General Plan
Future General Plan (Scenario B)
AM Peak Hour

Level Of Service Computation Report
2000 HCM Operations Method (Future Volume Alternative)

Intersection #112 Leon Road & Jean Nicholas

Cycle (sec): 100 | Critical Vol./Cap.(X): 0.384
Loss Time (sec): 0 (Y+R=4.0 sec) | Average Delay (sec/veh): 23.0
Optimal Cycle: 37 | Level Of Service: C

Street Name:	Leon Road						Jean Nicholas					
Approach:	North Bound			South Bound			East Bound			West Bound		
Movement:	L -	T -	R	L -	T -	R	L -	T -	R	L -	T -	R
Control:	Protected			Protected			Protected			Protected		
Rights:	Include			Include			Include			Include		
Min. Green:	0	0	0	0	0	0	0	0	0	0	0	0
Lanes:	1 0	1 1	0	1 0	1 1	0	1 0	1 1	0	1 0	1 1	0
Volume Module:												
Base Vol:	6	194	132	228	539	50	2	176	14	148	23	250
Growth Adj:	1.00	1.00	1.00	1.00	1.00	1.00	1.00	1.00	1.00	1.00	1.00	1.00
Initial Bse:	6	194	132	228	539	50	2	176	14	148	23	250
Added Vol:	0	0	0	0	0	0	0	0	0	0	0	0
PasserByVol:	0	0	0	0	0	0	0	0	0	0	0	0
Initial Fut:	6	194	132	228	539	50	2	176	14	148	23	250
User Adj:	1.00	1.00	1.00	1.00	1.00	1.00	1.00	1.00	1.00	1.00	1.00	1.00
PHF Adj:	1.00	1.00	1.00	1.00	1.00	1.00	1.00	1.00	1.00	1.00	1.00	1.00
PHF Volume:	6	194	132	228	539	50	2	176	14	148	23	250
Reduct Vol:	0	0	0	0	0	0	0	0	0	0	0	0
Reduced Vol:	6	194	132	228	539	50	2	176	14	148	23	250
PCE Adj:	1.00	1.00	1.00	1.00	1.00	1.00	1.00	1.00	1.00	1.00	1.00	1.00
MLF Adj:	1.00	1.00	1.00	1.00	1.00	1.00	1.00	1.00	1.00	1.00	1.00	1.00
FinalVolume:	6	194	132	228	539	50	2	176	14	148	23	250
Saturation Flow Module:												
Sat/Lane:	1900	1900	1900	1900	1900	1900	1900	1900	1900	1900	1900	1900
Adjustment:	0.95	0.89	0.89	0.95	0.94	0.94	0.95	0.94	0.94	0.95	0.82	0.82
Lanes:	1.00	1.19	0.81	1.00	1.83	0.17	1.00	1.85	0.15	1.00	1.00	1.00
Final Sat.:	1805	2017	1373	1805	3261	302	1805	3307	263	1805	1558	1558
Capacity Analysis Module:												
Vol/Sat:	0.00	0.10	0.10	0.13	0.17	0.17	0.00	0.05	0.05	0.08	0.01	0.16
Crit Moves:		****		****			****					****
Green/Cycle:	0.01	0.25	0.25	0.33	0.57	0.57	0.00	0.17	0.17	0.26	0.42	0.42
Volume/Cap:	0.29	0.38	0.38	0.38	0.29	0.29	0.38	0.32	0.32	0.32	0.04	0.38
Delay/Veh:	56.7	31.4	31.4	26.2	11.3	11.3	91.0	37.1	37.1	30.6	17.2	20.5
User DelAdj:	1.00	1.00	1.00	1.00	1.00	1.00	1.00	1.00	1.00	1.00	1.00	1.00
AdjDel/Veh:	56.7	31.4	31.4	26.2	11.3	11.3	91.0	37.1	37.1	30.6	17.2	20.5
LOS by Move:	E	C	C	C	B	B	F	D	D	C	B	C
HCM2kAvgQ:	1	5	5	5	5	5	0	3	3	4	0	6

Note: Queue reported is the number of cars per lane.

City of Murrieta General Plan
Future General Plan (Scenario B)
AM Peak Hour

Level Of Service Computation Report
2000 HCM Operations Method (Future Volume Alternative)

Intersection #122 Meadowlark Lane - Whitewood Road & Clinton Keith Road

Cycle (sec): 100 | Critical Vol./Cap.(X): 1.238
Loss Time (sec): 0 (Y+R=4.0 sec) | Average Delay (sec/veh): 106.9
Optimal Cycle: 180 | Level Of Service: F

Street Name:	Meadowlark Lane - Whitewood Road						Clinton Keith Road					
Approach:	North Bound			South Bound			East Bound			West Bound		
Movement:	L -	T -	R	L -	T -	R	L -	T -	R	L -	T -	R
Control:	Protected			Protected			Protected			Protected		
Rights:	Include			Include			Include			Include		
Min. Green:	0	0	0	0	0	0	0	0	0	0	0	0
Lanes:	2 0	2 0	1	2 0	1 1	0	2 0	3 0	1	2 0	3 0	1
Volume Module:												
Base Vol:	101	121	1015	337	232	923	1090	682	126	1007	943	326
Growth Adj:	1.00	1.00	1.00	1.00	1.00	1.00	1.00	1.00	1.00	1.00	1.00	1.00
Initial Bse:	101	121	1015	337	232	923	1090	682	126	1007	943	326
Added Vol:	0	0	0	0	0	0	0	0	0	0	0	0
PasserByVol:	0	0	0	0	0	0	0	0	0	0	0	0
Initial Fut:	101	121	1015	337	232	923	1090	682	126	1007	943	326
User Adj:	1.00	1.00	1.00	1.00	1.00	1.00	1.00	1.00	1.00	1.00	1.00	1.00
PHF Adj:	1.00	1.00	1.00	1.00	1.00	1.00	1.00	1.00	1.00	1.00	1.00	1.00
PHF Volume:	101	121	1015	337	232	923	1090	682	126	1007	943	326
Reduct Vol:	0	0	0	0	0	0	0	0	0	0	0	0
Reduced Vol:	101	121	1015	337	232	923	1090	682	126	1007	943	326
PCE Adj:	1.00	1.00	1.00	1.00	1.00	1.00	1.00	1.00	1.00	1.00	1.00	1.00
MLF Adj:	1.00	1.00	1.00	1.00	1.00	1.00	1.00	1.00	1.00	1.00	1.00	1.00
FinalVolume:	101	121	1015	337	232	923	1090	682	126	1007	943	326
Saturation Flow Module:												
Sat/Lane:	1900	1900	1900	1900	1900	1900	1900	1900	1900	1900	1900	1900
Adjustment:	0.92	0.95	0.85	0.92	0.84	0.84	0.92	0.91	0.85	0.92	0.91	0.85
Lanes:	2.00	2.00	1.00	2.00	1.00	1.00	2.00	3.00	1.00	2.00	3.00	1.00
Final Sat.:	3502	3610	1615	3502	1588	1588	3502	5187	1615	3502	5187	1615
Capacity Analysis Module:												
Vol/Sat:	0.03	0.03	0.63	0.10	0.15	0.58	0.31	0.13	0.08	0.29	0.18	0.20
Crit Moves:			****	****			****					****
Green/Cycle:	0.03	0.51	0.51	0.08	0.56	0.56	0.25	0.13	0.13	0.28	0.16	0.16
Volume/Cap:	1.04	0.07	1.24	1.24	0.26	1.04	1.24	1.01	0.60	1.01	1.11	1.24
Delay/Veh:	151.8	12.6	142.1	180.5	11.5	60.7	154.2	80.9	45.8	67.0	109	177.0
User DelAdj:	1.00	1.00	1.00	1.00	1.00	1.00	1.00	1.00	1.00	1.00	1.00	1.00
AdjDel/Veh:	151.8	12.6	142.1	180.5	11.5	60.7	154.2	80.9	45.8	67.0	109	177.0
LOS by Move:	F	B	F	F	B	E	F	F	D	E	F	F
HCM2kAvgQ:	4	1	57	12	4	41	33	13	5	23	19	20

Note: Queue reported is the number of cars per lane.

City of Murrieta General Plan
Future General Plan (Scenario B)
AM Peak Hour

Level Of Service Computation Report
2000 HCM Operations Method (Future Volume Alternative)

Intersection #138 Jefferson Avenue & Cherry Street

Cycle (sec): 100 | Critical Vol./Cap.(X): 0.776
Loss Time (sec): 0 (Y+R=4.0 sec) | Average Delay (sec/veh): 21.8
Optimal Cycle: 102 | Level Of Service: C

Street Name:	Jefferson Avenue						Cherry Street					
Approach:	North Bound			South Bound			East Bound			West Bound		
Movement:	L -	T -	R	L -	T -	R	L -	T -	R	L -	T -	R
Control:	Protected			Protected			Protected			Protected		
Rights:	Include			Include			Include			Include		
Min. Green:	0	0	0	0	0	0	0	0	0	0	0	0
Lanes:	1 0	2 0	1	1 0	1 1	0	1 0	2 1	0	1 0	2 1	0
Volume Module:												
Base Vol:	87	628	194	36	640	21	1	47	6	146	1294	882
Growth Adj:	1.00	1.00	1.00	1.00	1.00	1.00	1.00	1.00	1.00	1.00	1.00	1.00
Initial Bse:	87	628	194	36	640	21	1	47	6	146	1294	882
Added Vol:	0	0	0	0	0	0	0	0	0	0	0	0
PasserByVol:	0	0	0	0	0	0	0	0	0	0	0	0
Initial Fut:	87	628	194	36	640	21	1	47	6	146	1294	882
User Adj:	1.00	1.00	1.00	1.00	1.00	1.00	1.00	1.00	1.00	1.00	1.00	1.00
PHF Adj:	1.00	1.00	1.00	1.00	1.00	1.00	1.00	1.00	1.00	1.00	1.00	1.00
PHF Volume:	87	628	194	36	640	21	1	47	6	146	1294	882
Reduct Vol:	0	0	0	0	0	0	0	0	0	0	0	0
Reduced Vol:	87	628	194	36	640	21	1	47	6	146	1294	882
PCE Adj:	1.00	1.00	1.00	1.00	1.00	1.00	1.00	1.00	1.00	1.00	1.00	1.00
MLF Adj:	1.00	1.00	1.00	1.00	1.00	1.00	1.00	1.00	1.00	1.00	1.00	1.00
FinalVolume:	87	628	194	36	640	21	1	47	6	146	1294	882
Saturation Flow Module:												
Sat/Lane:	1900	1900	1900	1900	1900	1900	1900	1900	1900	1900	1900	1900
Adjustment:	0.95	0.95	0.85	0.95	0.95	0.95	0.95	0.89	0.89	0.95	0.85	0.85
Lanes:	1.00	2.00	1.00	1.00	1.94	0.06	1.00	2.66	0.34	1.00	2.00	1.00
Final Sat.:	1805	3610	1615	1805	3478	114	1805	4522	577	1805	3247	1624
Capacity Analysis Module:												
Vol/Sat:	0.05	0.17	0.12	0.02	0.18	0.18	0.00	0.01	0.01	0.08	0.40	0.54
Crit Moves:	****				****		****					****
Green/Cycle:	0.06	0.27	0.27	0.03	0.24	0.24	0.00	0.08	0.08	0.62	0.70	0.70
Volume/Cap:	0.78	0.65	0.45	0.65	0.78	0.78	0.78	0.13	0.13	0.13	0.57	0.78
Delay/Veh:	74.3	33.9	31.1	71.6	40.2	40.2	563.4	42.9	42.9	7.9	7.7	11.3
User DelAdj:	1.00	1.00	1.00	1.00	1.00	1.00	1.00	1.00	1.00	1.00	1.00	1.00
AdjDel/Veh:	74.3	33.9	31.1	71.6	40.2	40.2	563.4	42.9	42.9	7.9	7.7	11.3
LOS by Move:	E	C	C	E	D	D	F	D	D	A	A	B
HCM2kAvgQ:	4	10	5	2	12	12	0	1	1	2	11	21

Note: Queue reported is the number of cars per lane.

City of Murrieta General Plan
Future General Plan (Scenario B)
AM Peak Hour

Level Of Service Computation Report
2000 HCM Operations Method (Future Volume Alternative)

Intersection #141 Jefferson Ave & Nutmeg St

Cycle (sec): 100 Critical Vol./Cap.(X): 1.001
Loss Time (sec): 0 (Y+R=4.0 sec) Average Delay (sec/veh): 52.4
Optimal Cycle: 180 Level Of Service: D

Street Name:	Jefferson Ave						Nutmeg St					
Approach:	North Bound			South Bound			East Bound			West Bound		
Movement:	L	T	R	L	T	R	L	T	R	L	T	R
Control:	Protected			Protected			Protected			Protected		
Rights:	Include			Include			Include			Include		
Min. Green:	0	0	0	0	0	0	0	0	0	0	0	0
Lanes:	1 0	2 1	0	1 0	2 1	0	1 0	1 1	0	1 0	1 1	0
Volume Module:												
Base Vol:	193	357	265	84	1819	66	96	202	511	382	176	72
Growth Adj:	1.00	1.00	1.00	1.00	1.00	1.00	1.00	1.00	1.00	1.00	1.00	1.00
Initial Bse:	193	357	265	84	1819	66	96	202	511	382	176	72
Added Vol:	0	0	0	0	0	0	0	0	0	0	0	0
PasserByVol:	0	0	0	0	0	0	0	0	0	0	0	0
Initial Fut:	193	357	265	84	1819	66	96	202	511	382	176	72
User Adj:	1.00	1.00	1.00	1.00	1.00	1.00	1.00	1.00	1.00	1.00	1.00	1.00
PHF Adj:	1.00	1.00	1.00	1.00	1.00	1.00	1.00	1.00	1.00	1.00	1.00	1.00
PHF Volume:	193	357	265	84	1819	66	96	202	511	382	176	72
Reduct Vol:	0	0	0	0	0	0	0	0	0	0	0	0
Reduced Vol:	193	357	265	84	1819	66	96	202	511	382	176	72
PCE Adj:	1.00	1.00	1.00	1.00	1.00	1.00	1.00	1.00	1.00	1.00	1.00	1.00
MLF Adj:	1.00	1.00	1.00	1.00	1.00	1.00	1.00	1.00	1.00	1.00	1.00	1.00
FinalVolume:	193	357	265	84	1819	66	96	202	511	382	176	72
Saturation Flow Module:												
Sat/Lane:	1900	1900	1900	1900	1900	1900	1900	1900	1900	1900	1900	1900
Adjustment:	0.95	0.85	0.85	0.95	0.91	0.91	0.95	0.85	0.85	0.95	0.91	0.91
Lanes:	1.00	2.00	1.00	1.00	2.89	0.11	1.00	1.00	1.00	1.00	1.42	0.58
Final Sat.:	1805	3237	1618	1805	4980	181	1805	1610	1610	1805	2452	1003
Capacity Analysis Module:												
Vol/Sat:	0.11	0.11	0.16	0.05	0.37	0.37	0.05	0.13	0.32	0.21	0.07	0.07
Crit Moves:	****				****				****	****		
Green/Cycle:	0.11	0.37	0.37	0.10	0.36	0.36	0.22	0.32	0.32	0.21	0.30	0.30
Volume/Cap:	1.00	0.30	0.45	0.45	1.00	1.00	0.24	0.40	1.00	1.00	0.24	0.24
Delay/Veh:	109.8	22.6	24.2	43.7	52.8	52.8	32.0	26.8	68.2	85.8	26.2	26.2
User DelAdj:	1.00	1.00	1.00	1.00	1.00	1.00	1.00	1.00	1.00	1.00	1.00	1.00
AdjDel/Veh:	109.8	22.6	24.2	43.7	52.8	52.8	32.0	26.8	68.2	85.8	26.2	26.2
LOS by Move:	F	C	C	D	D	D	C	C	E	F	C	C
HCM2kAvgQ:	10	4	7	3	29	29	2	5	23	18	3	3

Note: Queue reported is the number of cars per lane.

City of Murrieta General Plan
Future General Plan (Scenario B)
AM Peak Hour

Level Of Service Computation Report
2000 HCM Operations Method (Future Volume Alternative)

Intersection #142 Jefferson Ave & Magnolia St

Cycle (sec): 100 Critical Vol./Cap.(X): 0.692
Loss Time (sec): 0 (Y+R=4.0 sec) Average Delay (sec/veh): 10.7
Optimal Cycle: 74 Level Of Service: B

Street Name:	Jefferson Ave						Magnolia St					
Approach:	North Bound			South Bound			East Bound			West Bound		
Movement:	L	T	R	L	T	R	L	T	R	L	T	R
Control:	Protected			Protected			Protected			Protected		
Rights:	Include			Include			Include			Include		
Min. Green:	0	0	0	0	0	0	0	0	0	0	0	0
Lanes:	1 0	2 1	0	1 0	2 1	0	1 0	0 1	0	1 0	0 1	0
Volume Module:												
Base Vol:	81	668	8	8	2498	242	166	1	155	28	3	1
Growth Adj:	1.00	1.00	1.00	1.00	1.00	1.00	1.00	1.00	1.00	1.00	1.00	1.00
Initial Bse:	81	668	8	8	2498	242	166	1	155	28	3	1
Added Vol:	0	0	0	0	0	0	0	0	0	0	0	0
PasserByVol:	0	0	0	0	0	0	0	0	0	0	0	0
Initial Fut:	81	668	8	8	2498	242	166	1	155	28	3	1
User Adj:	1.00	1.00	1.00	1.00	1.00	1.00	1.00	1.00	1.00	1.00	1.00	1.00
PHF Adj:	1.00	1.00	1.00	1.00	1.00	1.00	1.00	1.00	1.00	1.00	1.00	1.00
PHF Volume:	81	668	8	8	2498	242	166	1	155	28	3	1
Reduct Vol:	0	0	0	0	0	0	0	0	0	0	0	0
Reduced Vol:	81	668	8	8	2498	242	166	1	155	28	3	1
PCE Adj:	1.00	1.00	1.00	1.00	1.00	1.00	1.00	1.00	1.00	1.00	1.00	1.00
MLF Adj:	1.00	1.00	1.00	1.00	1.00	1.00	1.00	1.00	1.00	1.00	1.00	1.00
FinalVolume:	81	668	8	8	2498	242	166	1	155	28	3	1
Saturation Flow Module:												
Sat/Lane:	1900	1900	1900	1900	1900	1900	1900	1900	1900	1900	1900	1900
Adjustment:	0.95	0.91	0.91	0.95	0.90	0.90	0.95	0.85	0.85	0.95	0.96	0.96
Lanes:	1.00	2.96	0.04	1.00	2.74	0.26	1.00	0.01	0.99	1.00	0.75	0.25
Final Sat.:	1805	5115	61	1805	4667	452	1805	10	1607	1805	1372	457
Capacity Analysis Module:												
Vol/Sat:	0.04	0.13	0.13	0.00	0.54	0.54	0.09	0.10	0.10	0.02	0.00	0.00
Crit Moves:	****				****			****		****		
Green/Cycle:	0.06	0.81	0.81	0.03	0.77	0.77	0.16	0.14	0.14	0.02	0.00	0.00
Volume/Cap:	0.69	0.16	0.16	0.16	0.69	0.69	0.58	0.69	0.69	0.69	0.58	0.58
Delay/Veh:	62.1	2.1	2.1	49.0	6.1	6.1	42.1	49.9	49.9	89.3	137	137.1
User DelAdj:	1.00	1.00	1.00	1.00	1.00	1.00	1.00	1.00	1.00	1.00	1.00	1.00
AdjDel/Veh:	62.1	2.1	2.1	49.0	6.1	6.1	42.1	49.9	49.9	89.3	137	137.1
LOS by Move:	E	A	A	D	A	A	D	D	D	F	F	F
HCM2kAvgQ:	4	2	2	0	16	16	6	6	6	2	1	1

Note: Queue reported is the number of cars per lane.

City of Murrieta General Plan
Future General Plan (Scenario B)
AM Peak Hour

Level Of Service Computation Report
2000 HCM Operations Method (Future Volume Alternative)

Intersection #149 Monroe Ave & Murrieta Hot Springs Rd

Cycle (sec): 100 Critical Vol./Cap.(X): 0.336
Loss Time (sec): 0 (Y+R=4.0 sec) Average Delay (sec/veh): 8.3
Optimal Cycle: 34 Level Of Service: A

Street Name:	Monroe Ave						Murrieta Hot Springs Rd					
Approach:	North Bound			South Bound			East Bound			West Bound		
Movement:	L -	T -	R	L -	T -	R	L -	T -	R	L -	T -	R
Control:	Protected			Protected			Protected			Protected		
Rights:	Include			Ovl			Ovl			Include		
Min. Green:	0	0	0	0	0	0	0	0	0	0	0	0
Lanes:	1 0	2 0	1	1 0	2 0	1	1 0	4 0	1	1 0	3 1	0
Volume Module:												
Base Vol:	44	79	49	1	56	53	109	1196	37	8	1601	24
Growth Adj:	1.00	1.00	1.00	1.00	1.00	1.00	1.00	1.00	1.00	1.00	1.00	1.00
Initial Bse:	44	79	49	1	56	53	109	1196	37	8	1601	24
Added Vol:	0	0	0	0	0	0	0	0	0	0	0	0
PasserByVol:	0	0	0	0	0	0	0	0	0	0	0	0
Initial Fut:	44	79	49	1	56	53	109	1196	37	8	1601	24
User Adj:	1.00	1.00	1.00	1.00	1.00	1.00	1.00	1.00	1.00	1.00	1.00	1.00
PHF Adj:	1.00	1.00	1.00	1.00	1.00	1.00	1.00	1.00	1.00	1.00	1.00	1.00
PHF Volume:	44	79	49	1	56	53	109	1196	37	8	1601	24
Reduct Vol:	0	0	0	0	0	0	0	0	0	0	0	0
Reduced Vol:	44	79	49	1	56	53	109	1196	37	8	1601	24
PCE Adj:	1.00	1.00	1.00	1.00	1.00	1.00	1.00	1.00	1.00	1.00	1.00	1.00
MLF Adj:	1.00	1.00	1.00	1.00	1.00	1.00	1.00	1.00	1.00	1.00	1.00	1.00
FinalVolume:	44	79	49	1	56	53	109	1196	37	8	1601	24
Saturation Flow Module:												
Sat/Lane:	1900	1900	1900	1900	1900	1900	1900	1900	1900	1900	1900	1900
Adjustment:	0.95	0.95	0.85	0.95	0.95	0.85	0.95	0.91	0.85	0.95	0.91	0.91
Lanes:	1.00	2.00	1.00	1.00	2.00	1.00	1.00	4.00	1.00	1.00	3.94	0.06
Final Sat.:	1805	3610	1615	1805	3610	1615	1805	6916	1615	1805	6800	102
Capacity Analysis Module:												
Vol/Sat:	0.02	0.02	0.03	0.00	0.02	0.03	0.06	0.17	0.02	0.00	0.24	0.24
Crit Moves:	****				****		****				****	
Green/Cycle:	0.07	0.12	0.12	0.00	0.05	0.23	0.18	0.86	0.93	0.02	0.70	0.70
Volume/Cap:	0.34	0.19	0.26	0.26	0.34	0.15	0.34	0.20	0.02	0.20	0.34	0.34
Delay/Veh:	45.6	40.1	41.0	82.7	47.4	31.1	36.4	1.2	0.2	50.5	5.9	5.9
User DelAdj:	1.00	1.00	1.00	1.00	1.00	1.00	1.00	1.00	1.00	1.00	1.00	1.00
AdjDel/Veh:	45.6	40.1	41.0	82.7	47.4	31.1	36.4	1.2	0.2	50.5	5.9	5.9
LOS by Move:	D	D	D	F	D	C	D	A	A	D	A	A
HCM2kAvgQ:	2	1	2	0	1	1	3	2	0	0	5	5

Note: Queue reported is the number of cars per lane.

City of Murrieta General Plan
Future General Plan (Scenario B)
AM Peak Hour

Level Of Service Computation Report
2000 HCM Operations Method (Future Volume Alternative)

Intersection #158 Adams Ave & Guava St

Cycle (sec): 100 Critical Vol./Cap.(X): 0.283
Loss Time (sec): 0 (Y+R=4.0 sec) Average Delay (sec/veh): 11.7
Optimal Cycle: 20 Level Of Service: B

Street Name:	Adams Ave						Guava St					
Approach:	North Bound			South Bound			East Bound			West Bound		
Movement:	L -	T -	R	L -	T -	R	L -	T -	R	L -	T -	R
Control:	Permitted			Permitted			Permitted			Permitted		
Rights:	Include			Include			Include			Include		
Min. Green:	0	0	0	0	0	0	0	0	0	0	0	0
Lanes:	1 0	1 1	0	1 0	1 1	0	1 0	0 1	0	1 0	0 1	0
Volume Module:												
Base Vol:	70	76	18	100	20	42	21	326	47	3	267	99
Growth Adj:	1.00	1.00	1.00	1.00	1.00	1.00	1.00	1.00	1.00	1.00	1.00	1.00
Initial Bse:	70	76	18	100	20	42	21	326	47	3	267	99
Added Vol:	0	0	0	0	0	0	0	0	0	0	0	0
PasserByVol:	0	0	0	0	0	0	0	0	0	0	0	0
Initial Fut:	70	76	18	100	20	42	21	326	47	3	267	99
User Adj:	1.00	1.00	1.00	1.00	1.00	1.00	1.00	1.00	1.00	1.00	1.00	1.00
PHF Adj:	1.00	1.00	1.00	1.00	1.00	1.00	1.00	1.00	1.00	1.00	1.00	1.00
PHF Volume:	70	76	18	100	20	42	21	326	47	3	267	99
Reduct Vol:	0	0	0	0	0	0	0	0	0	0	0	0
Reduced Vol:	70	76	18	100	20	42	21	326	47	3	267	99
PCE Adj:	1.00	1.00	1.00	1.00	1.00	1.00	1.00	1.00	1.00	1.00	1.00	1.00
MLF Adj:	1.00	1.00	1.00	1.00	1.00	1.00	1.00	1.00	1.00	1.00	1.00	1.00
FinalVolume:	70	76	18	100	20	42	21	326	47	3	267	99
Saturation Flow Module:												
Sat/Lane:	1900	1900	1900	1900	1900	1900	1900	1900	1900	1900	1900	1900
Adjustment:	0.68	0.92	0.92	0.64	0.85	0.85	0.48	0.98	0.98	0.48	0.96	0.96
Lanes:	1.00	1.62	0.38	1.00	1.00	1.00	1.00	0.87	0.13	1.00	0.73	0.27
Final Sat.:	1298	2834	671	1222	1621	1621	920	1629	235	912	1331	493
Capacity Analysis Module:												
Vol/Sat:	0.05	0.03	0.03	0.08	0.01	0.03	0.02	0.20	0.20	0.00	0.20	0.20
Crit Moves:				****							****	
Green/Cycle:	0.29	0.29	0.29	0.29	0.29	0.29	0.71	0.71	0.71	0.71	0.71	0.71
Volume/Cap:	0.19	0.09	0.09	0.28	0.04	0.09	0.03	0.28	0.28	0.00	0.28	0.28
Delay/Veh:	26.9	26.0	26.0	27.9	25.6	26.0	4.3	5.4	5.4	4.2	5.4	5.4
User DelAdj:	1.00	1.00	1.00	1.00	1.00	1.00	1.00	1.00	1.00	1.00	1.00	1.00
AdjDel/Veh:	26.9	26.0	26.0	27.9	25.6	26.0	4.3	5.4	5.4	4.2	5.4	5.4
LOS by Move:	C	C	C	C	C	C	A	A	A	A	A	A
HCM2kAvgQ:	2	1	1	3	0	1	0	4	4	0	4	4

Note: Queue reported is the number of cars per lane.

City of Murrieta General Plan
Future General Plan (Scenario B)
PM Peak Hour

Scenario Report

Scenario:	Future GP Scenario B PM
Command:	Future GP Scenario B PM
Volume:	Future GP Scenario B PM
Geometry:	Future
Impact Fee:	Default Impact Fee
Trip Generation:	Default Trip Generation
Trip Distribution:	Default Trip Distribution
Paths:	Default Path
Routes:	Default Route
Configuration:	Future GP Scenario B PM

City of Murrieta General Plan
Future General Plan (Scenario B)
PM Peak Hour

Turning Movement Report

Volume	Northbound			Southbound			Eastbound			Westbound			Total
Type	Left	Thru	Right	Left	Thru	Right	Left	Thru	Right	Left	Thru	Right	Volume
#1 Menifee Road & Scott Road													
Base	277	619	816	203	319	103	254	930	476	442	549	550	5538
Added	0	0	0	0	0	0	0	0	0	0	0	0	0
Total	277	619	816	203	319	103	254	930	476	442	549	550	5538
#2 Leon Road & Scott Road													
Base	0	0	0	0	0	0	0	0	0	0	0	0	0
Added	0	0	0	0	0	0	0	0	0	0	0	0	0
Total	0	0	0	0	0	0	0	0	0	0	0	0	0
#3 Winchester Road/SR-79 & Scott Road													
Base	126	2471	28	1112	1886	129	117	292	123	0	222	1064	7570
Added	0	0	0	0	0	0	0	0	0	0	0	0	0
Total	126	2471	28	1112	1886	129	117	292	123	0	222	1064	7570
#4 Antelope Road & Keller Road													
Base	0	0	0	0	0	0	0	0	0	0	0	0	0
Added	0	0	0	0	0	0	0	0	0	0	0	0	0
Total	0	0	0	0	0	0	0	0	0	0	0	0	0
#5 Menifee Road - Meadowlark Road & Keller Road													
Base	0	0	0	0	0	0	0	0	0	0	0	0	0
Added	0	0	0	0	0	0	0	0	0	0	0	0	0
Total	0	0	0	0	0	0	0	0	0	0	0	0	0
#6 Briggs Road & Keller Road													
Base	349	92	106	1	53	87	13	310	785	9	303	4	2112
Added	0	0	0	0	0	0	0	0	0	0	0	0	0
Total	349	92	106	1	53	87	13	310	785	9	303	4	2112
#7 Leon Road & Keller Road													
Base	0	0	0	0	0	0	0	0	0	0	0	0	0
Added	0	0	0	0	0	0	0	0	0	0	0	0	0
Total	0	0	0	0	0	0	0	0	0	0	0	0	0
#8 Winchester Road - SR-79 & Keller Road													
Base	0	0	0	0	0	0	0	0	0	0	0	0	0
Added	0	0	0	0	0	0	0	0	0	0	0	0	0
Total	0	0	0	0	0	0	0	0	0	0	0	0	0
#9 Antelope Road & Golden City Drive - Baxter Road													
Base	2	300	837	264	1068	16	4	215	44	405	121	895	4171
Added	0	0	0	0	0	0	0	0	0	0	0	0	0
Total	2	300	837	264	1068	16	4	215	44	405	121	895	4171

City of Murrieta General Plan
Future General Plan (Scenario B)
PM Peak Hour

Volume Type	Northbound Left	Northbound Thru	Northbound Right	Southbound Left	Southbound Thru	Southbound Right	Eastbound Left	Eastbound Thru	Eastbound Right	Westbound Left	Westbound Thru	Westbound Right	Total Volume
#10 Whitewood Roa - /Meadowlark Road & Golden City Drive - Baxter Road													
Base	271	1188	3	0	697	984	243	12	981	0	8	2	4389
Added	0	0	0	0	0	0	0	0	0	0	0	0	0
Total	271	1188	3	0	697	984	243	12	981	0	8	2	4389
#11 Briggs Road & Baxter Road - Jean Nicholas													
Base	0	449	72	41	681	0	0	0	0	10	0	91	1344
Added	0	0	0	0	0	0	0	0	0	0	0	0	0
Total	0	449	72	41	681	0	0	0	0	10	0	91	1344
#12 Leon Road & Jean Nicholas													
Base	0	0	0	0	0	0	0	0	0	0	0	0	0
Added	0	0	0	0	0	0	0	0	0	0	0	0	0
Total	0	0	0	0	0	0	0	0	0	0	0	0	0
#13 Winchester Road - SR-79 & Nicholas - Skyview													
Base	201	2651	200	77	2065	18	40	683	128	148	447	123	6781
Added	0	0	0	0	0	0	0	0	0	0	0	0	0
Total	201	2651	200	77	2065	18	40	683	128	148	447	123	6781
#14 Antelope Road & Linnel Lane Extension													
Base	48	594	162	82	1105	613	85	463	310	51	563	348	4424
Added	0	0	0	0	0	0	0	0	0	0	0	0	0
Total	48	594	162	82	1105	613	85	463	310	51	563	348	4424
#15 Whitewood Road - Meadowlark Road & Linnel Lane Extension													
Base	27	581	514	153	1498	200	26	458	224	274	734	792	5481
Added	0	0	0	0	0	0	0	0	0	0	0	0	0
Total	27	581	514	153	1498	200	26	458	224	274	734	792	5481
#16 Leon Road & Max Gillis Road													
Base	517	405	579	371	254	131	104	213	467	570	366	382	4359
Added	0	0	0	0	0	0	0	0	0	0	0	0	0
Total	517	405	579	371	254	131	104	213	467	570	366	382	4359
#17 Winchester Road - SR-79 & Max Gillis - Thompson													
Base	244	2443	86	297	1330	662	732	322	145	32	248	82	6623
Added	0	0	0	0	0	0	0	0	0	0	0	0	0
Total	244	2443	86	297	1330	662	732	322	145	32	248	82	6623
#18 California Oaks Road & Clinton Keith Road													
Base	312	0	1105	0	0	0	0	2509	123	456	2578	0	7083
Added	0	0	0	0	0	0	0	0	0	0	0	0	0
Total	312	0	1105	0	0	0	0	2509	123	456	2578	0	7083

City of Murrieta General Plan
Future General Plan (Scenario B)
PM Peak Hour

Volume Type	Northbound Left	Northbound Thru	Northbound Right	Southbound Left	Southbound Thru	Southbound Right	Eastbound Left	Eastbound Thru	Eastbound Right	Westbound Left	Westbound Thru	Westbound Right	Total Volume
#19 I-215 SB Off-Ramp & Clinton Keith Road													
Base	0	0	0	36	0	628	0	2693	826	0	2635	207	7025
Added	0	0	0	0	0	0	0	0	0	0	0	0	0
Total	0	0	0	36	0	628	0	2693	826	0	2635	207	7025
#20 I-215 NB Off Ramp & Clinton Keith Road													
Base	517	0	464	0	0	0	0	1524	283	0	2960	253	6001
Added	0	0	0	0	0	0	0	0	0	0	0	0	0
Total	517	0	464	0	0	0	0	1524	283	0	2960	253	6001
#21 Antelope Road & Clinton Keith Road													
Base	0	0	0	111	0	926	147	2057	0	0	1746	375	5362
Added	0	0	0	0	0	0	0	0	0	0	0	0	0
Total	0	0	0	111	0	926	147	2057	0	0	1746	375	5362
#22 Meadowlark Lane - Whitewood Road & Clinton Keith Road													
Base	0	0	0	0	0	0	0	0	0	0	0	0	0
Added	0	0	0	0	0	0	0	0	0	0	0	0	0
Total	0	0	0	0	0	0	0	0	0	0	0	0	0
#23 Liberty Road & Clinton Keith Road													
Base	47	0	157	0	0	0	0	2305	86	11	2266	0	4872
Added	0	0	0	0	0	0	0	0	0	0	0	0	0
Total	47	0	157	0	0	0	0	2305	86	11	2266	0	4872
#24 Leon Road & Clinton Keith Road													
Base	0	0	0	145	0	1216	539	1900	0	0	1048	888	5736
Added	0	0	0	0	0	0	0	0	0	0	0	0	0
Total	0	0	0	145	0	1216	539	1900	0	0	1048	888	5736
#25 Winchester Road - SR-79 & Benton Road													
Base	575	2536	756	65	1007	510	75	634	1450	240	749	79	8676
Added	0	0	0	0	0	0	0	0	0	0	0	0	0
Total	575	2536	756	65	1007	510	75	634	1450	240	749	79	8676
#26 Winchester Road - SR-79 & Via Mira Mosa													
Base	65	3235	238	122	2123	370	238	31	52	223	40	135	6872
Added	0	0	0	0	0	0	0	0	0	0	0	0	0
Total	65	3235	238	122	2123	370	238	31	52	223	40	135	6872
#27 Monroe Ave & Los Alamos													
Base	27	457	249	250	318	64	240	1480	178	88	948	475	4774
Added	0	0	0	0	0	0	0	0	0	0	0	0	0
Total	27	457	249	250	318	64	240	1480	178	88	948	475	4774

City of Murrieta General Plan
Future General Plan (Scenario B)
PM Peak Hour

Volume Type	Northbound Left	Thru	Right	Southbound Left	Thru	Right	Eastbound Left	Thru	Right	Westbound Left	Thru	Right	Total Volume
#28 Jefferson Avenue & Murrieta Hot Springs Road													
Base	6	2312	1191	792	1042	69	39	196	108	594	90	903	7342
Added	0	0	0	0	0	0	0	0	0	0	0	0	0
Total	6	2312	1191	792	1042	69	39	196	108	594	90	903	7342
#29 Madison Avenue & Murrieta Hot Springs Road													
Base	383	646	1270	323	260	127	389	1638	338	843	1322	187	7726
Added	0	0	0	0	0	0	0	0	0	0	0	0	0
Total	383	646	1270	323	260	127	389	1638	338	843	1322	187	7726
#30 I-15 SB Off-Ramp & Murrieta Hot Springs Road													
Base	0	0	0	675	0	423	0	2672	511	0	2361	112	6754
Added	0	0	0	0	0	0	0	0	0	0	0	0	0
Total	0	0	0	675	0	423	0	2672	511	0	2361	112	6754
#31 I-15 NB Off-Ramp & Murrieta Hot Springs Road													
Base	214	0	239	0	0	0	0	3013	363	0	1731	1644	7204
Added	0	0	0	0	0	0	0	0	0	0	0	0	0
Total	214	0	239	0	0	0	0	3013	363	0	1731	1644	7204
#32 I-215 SB Off-Ramp & Murrieta Hot Springs Road													
Base	0	0	0	474	0	359	0	3438	139	0	2361	238	7009
Added	0	0	0	0	0	0	0	0	0	0	0	0	0
Total	0	0	0	474	0	359	0	3438	139	0	2361	238	7009
#33 I-215 NB Off-Ramp & Murrieta Hot Springs Road													
Base	85	0	463	0	0	0	0	2333	104	0	2380	1413	6778
Added	0	0	0	0	0	0	0	0	0	0	0	0	0
Total	85	0	463	0	0	0	0	2333	104	0	2380	1413	6778
#34 Jackson Avenue & Murrieta Hot Springs Road													
Base	202	0	169	0	0	0	0	1910	58	211	2597	0	5147
Added	0	0	0	0	0	0	0	0	0	0	0	0	0
Total	202	0	169	0	0	0	0	1910	58	211	2597	0	5147
#35 Margarita Road & Murrieta Hot Springs Road													
Base	949	70	388	187	77	152	51	1745	535	276	1634	38	6102
Added	0	0	0	0	0	0	0	0	0	0	0	0	0
Total	949	70	388	187	77	152	51	1745	535	276	1634	38	6102
#36 French Valley Parkway & Murrieta Hot Springs Road													
Base	34	0	1093	0	0	0	0	1789	362	445	1723	0	5446
Added	0	0	0	0	0	0	0	0	0	0	0	0	0
Total	34	0	1093	0	0	0	0	1789	362	445	1723	0	5446

City of Murrieta General Plan
Future General Plan (Scenario B)
PM Peak Hour

Volume Type	Northbound Left	Thru	Right	Southbound Left	Thru	Right	Eastbound Left	Thru	Right	Westbound Left	Thru	Right	Total Volume
#37 Jefferson Avenue & Guava Street													
Base	15	3304	21	20	1223	332	80	134	117	2	77	16	5341
Added	0	0	0	0	0	0	0	0	0	0	0	0	0
Total	15	3304	21	20	1223	332	80	134	117	2	77	16	5341
#38 Jefferson Avenue & Cherry Street													
Base	0	0	0	0	0	0	0	0	0	0	0	0	0
Added	0	0	0	0	0	0	0	0	0	0	0	0	0
Total	0	0	0	0	0	0	0	0	0	0	0	0	0
#39 Washington Ave & Calle Del Oso Oro/Nutmeg													
Base	395	266	126	93	235	55	26	212	281	160	621	148	2618
Added	0	0	0	0	0	0	0	0	0	0	0	0	0
Total	395	266	126	93	235	55	26	212	281	160	621	148	2618
#40 Clinton Keith Rd & Calle de Oso Oro/Bear Creek Dr													
Base	77	177	207	17	90	271	188	528	140	228	753	10	2686
Added	0	0	0	0	0	0	0	0	0	0	0	0	0
Total	77	177	207	17	90	271	188	528	140	228	753	10	2686
#41 Jefferson Ave & Nutmeg St													
Base	0	0	0	0	0	0	0	0	0	0	0	0	0
Added	0	0	0	0	0	0	0	0	0	0	0	0	0
Total	0	0	0	0	0	0	0	0	0	0	0	0	0
#42 Jefferson Ave & Magnolia St													
Base	0	0	0	0	0	0	0	0	0	0	0	0	0
Added	0	0	0	0	0	0	0	0	0	0	0	0	0
Total	0	0	0	0	0	0	0	0	0	0	0	0	0
#43 Jefferson Ave & Lemon St													
Base	424	2136	2	6	1607	40	41	38	251	16	21	14	4596
Added	0	0	0	0	0	0	0	0	0	0	0	0	0
Total	424	2136	2	6	1607	40	41	38	251	16	21	14	4596
#44 Jefferson Ave & Kalmia St													
Base	391	1782	1026	905	1210	28	29	604	281	353	486	844	7939
Added	0	0	0	0	0	0	0	0	0	0	0	0	0
Total	391	1782	1026	905	1210	28	29	604	281	353	486	844	7939
#45 Jefferson Ave & Juniper St													
Base	150	2837	60	46	1660	84	358	83	371	18	58	88	5813
Added	0	0	0	0	0	0	0	0	0	0	0	0	0
Total	150	2837	60	46	1660	84	358	83	371	18	58	88	5813

City of Murrieta General Plan
Future General Plan (Scenario B)
PM Peak Hour

Volume Type	Northbound Left	Thru	Right	Southbound Left	Thru	Right	Eastbound Left	Thru	Right	Westbound Left	Thru	Right	Total Volume
#46 Jefferson Ave & Ivy St/Los Alamos Rd													
Base	294	2396	687	474	1480	110	75	188	154	257	258	496	6869
Added	0	0	0	0	0	0	0	0	0	0	0	0	0
Total	294	2396	687	474	1480	110	75	188	154	257	258	496	6869
#47 Madison Ave & Kalmia St													
Base	0	0	0	0	0	0	0	0	0	0	0	0	0
Added	0	0	0	0	0	0	0	0	0	0	0	0	0
Total	0	0	0	0	0	0	0	0	0	0	0	0	0
#48 Madison Ave/I-15 SB Ramps & Kalmia St													
Base	379	0	968	322	28	357	0	2478	248	281	1499	606	7166
Added	0	0	0	0	0	0	0	0	0	0	0	0	0
Total	379	0	968	322	28	357	0	2478	248	281	1499	606	7166
#49 Monroe Ave & Murrieta Hot Springs Rd													
Base	0	0	0	0	0	0	0	0	0	0	0	0	0
Added	0	0	0	0	0	0	0	0	0	0	0	0	0
Total	0	0	0	0	0	0	0	0	0	0	0	0	0
#50 Hancock Ave & Murrieta Hot Springs Rd													
Base	0	0	0	583	0	894	827	3365	0	0	2518	303	8490
Added	0	0	0	0	0	0	0	0	0	0	0	0	0
Total	0	0	0	583	0	894	827	3365	0	0	2518	303	8490
#51 Alta Murrieta Dr & Murrieta Hot Springs Rd													
Base	597	223	53	194	128	496	701	1703	520	174	2354	154	7297
Added	0	0	0	0	0	0	0	0	0	0	0	0	0
Total	597	223	53	194	128	496	701	1703	520	174	2354	154	7297
#52 Winchester Road - SR-79 & Murrieta Hot Springs Rd													
Base	340	1979	203	201	1167	1117	1437	1044	276	245	756	98	8863
Added	0	0	0	0	0	0	0	0	0	0	0	0	0
Total	340	1979	203	201	1167	1117	1437	1044	276	245	756	98	8863
#53 Hancock Ave & Los Alamos Rd													
Base	124	453	916	658	124	25	106	2012	51	585	1301	694	7049
Added	0	0	0	0	0	0	0	0	0	0	0	0	0
Total	124	453	916	658	124	25	106	2012	51	585	1301	694	7049
#54 I-215 SB Ramps & Los Alamos Rd													
Base	0	0	0	532	0	1542	0	3236	443	136	1247	0	7136
Added	0	0	0	0	0	0	0	0	0	0	0	0	0
Total	0	0	0	532	0	1542	0	3236	443	136	1247	0	7136

City of Murrieta General Plan
Future General Plan (Scenario B)
PM Peak Hour

Volume Type	Northbound Left	Thru	Right	Southbound Left	Thru	Right	Eastbound Left	Thru	Right	Westbound Left	Thru	Right	Total Volume
#55 I-215 NB Ramps & Los Alamos Rd													
Base	246	0	159	0	0	0	1617	2080	0	0	1139	329	5570
Added	0	0	0	0	0	0	0	0	0	0	0	0	0
Total	246	0	159	0	0	0	1617	2080	0	0	1139	329	5570
#56 Whitewood Rd & Los Alamos Rd													
Base	147	646	41	38	562	538	911	412	307	62	211	46	3921
Added	0	0	0	0	0	0	0	0	0	0	0	0	0
Total	147	646	41	38	562	538	911	412	307	62	211	46	3921
#57 Whitewood Rd & Murrieta Hot Springs Rd													
Base	445	344	533	360	263	236	179	1631	170	395	2251	490	7297
Added	0	0	0	0	0	0	0	0	0	0	0	0	0
Total	445	344	533	360	263	236	179	1631	170	395	2251	490	7297
#58 Adams Ave & Guava St													
Base	0	0	0	0	0	0	0	0	0	0	0	0	0
Added	0	0	0	0	0	0	0	0	0	0	0	0	0
Total	0	0	0	0	0	0	0	0	0	0	0	0	0
#59 Nutmeg St & Clinton Keith Rd													
Base	64	87	510	315	31	54	99	1885	64	515	1860	369	5853
Added	0	0	0	0	0	0	0	0	0	0	0	0	0
Total	64	87	510	315	31	54	99	1885	64	515	1860	369	5853
#60 Murrieta Oaks Ave-Mitchell Rd & Clinton Keith Rd													
Base	14	148	13	74	172	826	220	3209	25	28	2770	496	7995
Added	0	0	0	0	0	0	0	0	0	0	0	0	0
Total	14	148	13	74	172	826	220	3209	25	28	2770	496	7995
#61 I-215 SB Ramps & Scott Rd													
Base	0	0	0	160	0	259	0	756	412	0	1482	458	3527
Added	0	0	0	0	0	0	0	0	0	0	0	0	0
Total	0	0	0	160	0	259	0	756	412	0	1482	458	3527
#62 I-215 NB Ramps & Scott Rd													
Base	0	7	896	0	0	400	93	1001	0	0	1708	382	4487
Added	0	0	0	0	0	0	0	0	0	0	0	0	0
Total	0	7	896	0	0	400	93	1001	0	0	1708	382	4487
#102 Leon Road & Scott Road													
Base	547	394	18	64	226	357	545	528	541	5	402	164	3791
Added	0	0	0	0	0	0	0	0	0	0	0	0	0
Total	547	394	18	64	226	357	545	528	541	5	402	164	3791

City of Murrieta General Plan
Future General Plan (Scenario B)
PM Peak Hour

Volume	Northbound			Southbound			Eastbound			Westbound			Total
Type	Left	Thru	Right	Left	Thru	Right	Left	Thru	Right	Left	Thru	Right	Volume
#104 Antelope Road & Keller Road													
Base	780	471	867	89	99	573	804	859	273	283	605	154	5857
Added	0	0	0	0	0	0	0	0	0	0	0	0	0
Total	780	471	867	89	99	573	804	859	273	283	605	154	5857
#105 Menifee Road - Meadowlark Road & Keller Road													
Base	130	887	732	104	735	369	819	364	482	198	414	141	5375
Added	0	0	0	0	0	0	0	0	0	0	0	0	0
Total	130	887	732	104	735	369	819	364	482	198	414	141	5375
#107 Leon Road & Keller Road													
Base	64	899	1	0	740	83	83	56	279	18	190	3	2416
Added	0	0	0	0	0	0	0	0	0	0	0	0	0
Total	64	899	1	0	740	83	83	56	279	18	190	3	2416
#108 Winchester Road - SR-79 & Keller Road													
Base	1	2651	38	12	2124	1	1	33	1	11	17	26	4916
Added	0	0	0	0	0	0	0	0	0	0	0	0	0
Total	1	2651	38	12	2124	1	1	33	1	11	17	26	4916
#112 Leon Road & Jean Nicholas													
Base	3	519	263	354	572	13	2	129	11	108	143	435	2552
Added	0	0	0	0	0	0	0	0	0	0	0	0	0
Total	3	519	263	354	572	13	2	129	11	108	143	435	2552
#122 Meadowlark Lane - Whitewood Road & Clinton Keith Road													
Base	811	401	576	638	377	673	385	1305	501	324	727	1175	7893
Added	0	0	0	0	0	0	0	0	0	0	0	0	0
Total	811	401	576	638	377	673	385	1305	501	324	727	1175	7893
#138 Jefferson Avenue & Cherry Street													
Base	32	1267	821	210	888	7	2	1073	39	111	816	651	5917
Added	0	0	0	0	0	0	0	0	0	0	0	0	0
Total	32	1267	821	210	888	7	2	1073	39	111	816	651	5917
#141 Jefferson Ave & Nutmeg St													
Base	612	1204	389	108	1190	97	59	133	245	286	206	136	4665
Added	0	0	0	0	0	0	0	0	0	0	0	0	0
Total	612	1204	389	108	1190	97	59	133	245	286	206	136	4665
#142 Jefferson Ave & Magnolia St													
Base	141	2078	12	10	1589	109	148	5	52	7	5	14	4170
Added	0	0	0	0	0	0	0	0	0	0	0	0	0
Total	141	2078	12	10	1589	109	148	5	52	7	5	14	4170

City of Murrieta General Plan
Future General Plan (Scenario B)
PM Peak Hour

Volume	Northbound			Southbound			Eastbound			Westbound			Total
Type	Left	Thru	Right	Left	Thru	Right	Left	Thru	Right	Left	Thru	Right	Volume
#149 Monroe Ave & Murrieta Hot Springs Rd													
Base	178	240	200	1	250	117	170	2625	154	37	2083	27	6082
Added	0	0	0	0	0	0	0	0	0	0	0	0	0
Total	178	240	200	1	250	117	170	2625	154	37	2083	27	6082
#158 Adams Ave & Guava St													
Base	39	241	31	95	42	208	58	243	188	8	253	162	1568
Added	0	0	0	0	0	0	0	0	0	0	0	0	0
Total	39	241	31	95	42	208	58	243	188	8	253	162	1568

City of Murrieta General Plan
Future General Plan (Scenario B)
PM Peak Hour

Impact Analysis Report
Level Of Service

Intersection	Base LOS	Base Del/ Veh	Base V/ C	Future LOS	Future Del/ Veh	Future V/ C	Change in
# 1 Menifee Road & Scott Road	E	79.7	1.142	E	79.7	1.142	+ 0.000 D/V
# 3 Winchester Road/SR-79 & Scott	F	281.2	1.866	F	281.2	1.866	+ 0.000 D/V
# 6 Briggs Road & Keller Road	C	20.7	0.739	C	20.7	0.739	+ 0.000 D/V
# 9 Antelope Road & Golden City Dr	F	83.1	1.429	F	83.1	1.429	+ 0.000 D/V
# 10 Whitewood Roa - /Meadowlark Ro	F	121.3	1.386	F	121.3	1.386	+ 0.000 D/V
# 11 Briggs Road & Baxter Road - Je	A	7.9	0.245	A	7.9	0.245	+ 0.000 D/V
# 13 Winchester Road - SR-79 & Nich	C	29.3	0.910	C	29.3	0.910	+ 0.000 D/V
# 14 Antelope Road & Linnel Lane Ex	C	28.1	0.844	C	28.1	0.844	+ 0.000 D/V
# 15 Whitewood Road - Meadowlark Ro	D	40.7	0.984	D	40.7	0.984	+ 0.000 D/V
# 16 Leon Road & Max Gillis Road	D	39.7	0.916	D	39.7	0.916	+ 0.000 D/V
# 17 Winchester Road - SR-79 & Max	D	37.3	0.959	D	37.3	0.959	+ 0.000 D/V
# 18 California Oaks Road & Clinton	C	23.6	0.936	C	23.6	0.936	+ 0.000 D/V
# 19 I-215 SB Off-Ramp & Clinton Ke	B	12.5	0.740	B	12.5	0.740	+ 0.000 D/V
# 20 I-215 NB Off Ramp & Clinton Ke	B	17.8	0.858	B	17.8	0.858	+ 0.000 D/V
# 21 Antelope Road & Clinton Keith	A	3.8	0.494	A	3.8	0.494	+ 0.000 D/V
# 23 Liberty Road & Clinton Keith R	A	4.7	0.567	A	4.7	0.567	+ 0.000 D/V
# 24 Leon Road & Clinton Keith Road	C	29.2	0.978	C	29.2	0.978	+ 0.000 D/V
# 25 Winchester Road - SR-79 & Bent	E	63.5	1.086	E	63.5	1.086	+ 0.000 D/V
# 26 Winchester Road - SR-79 & Via	C	27.3	0.980	C	27.3	0.980	+ 0.000 D/V
# 27 Monroe Ave & Los Alamos	C	27.6	0.793	C	27.6	0.793	+ 0.000 D/V
# 28 Jefferson Avenue & Murrieta Ho	F	201.4	1.802	F	201.4	1.802	+ 0.000 D/V
# 29 Madison Avenue & Murrieta Hot	F	148.3	1.413	F	148.3	1.413	+ 0.000 D/V
# 30 I-15 SB Off-Ramp & Murrieta Ho	B	14.3	0.756	B	14.3	0.756	+ 0.000 D/V

City of Murrieta General Plan
Future General Plan (Scenario B)
PM Peak Hour

Intersection	Base LOS	Base Del/ Veh	Base V/ C	Future LOS	Future Del/ Veh	Future V/ C	Change in
# 31 I-15 NB Off-Ramp & Murrieta Ho	A	7.7	0.584	A	7.7	0.584	+ 0.000 D/V
# 32 I-215 SB Off-Ramp & Murrieta H	B	10.9	0.838	B	10.9	0.838	+ 0.000 D/V
# 33 I-215 NB Off-Ramp & Murrieta H	A	9.4	0.622	A	9.4	0.622	+ 0.000 D/V
# 34 Jackson Avenue & Murrieta Hot	A	8.5	0.558	A	8.5	0.558	+ 0.000 D/V
# 35 Margarita Road & Murrieta Hot	D	50.2	1.023	D	50.2	1.023	+ 0.000 D/V
# 36 French Valley Parkway & Murrie	B	18.0	0.810	B	18.0	0.810	+ 0.000 D/V
# 37 Jefferson Avenue & Guava Stree	A	9.1	0.795	A	9.1	0.795	+ 0.000 D/V
# 39 Washington Ave & Calle Del Oso	C	27.3	0.535	C	27.3	0.535	+ 0.000 D/V
# 40 Clinton Keith Rd & Calle de Os	B	16.4	0.655	B	16.4	0.655	+ 0.000 D/V
# 43 Jefferson Ave & Lemon St	B	17.8	0.718	B	17.8	0.718	+ 0.000 D/V
# 44 Jefferson Ave & Kalmia St	F	158.6	1.669	F	158.6	1.669	+ 0.000 D/V
# 45 Jefferson Ave & Juniper St	C	21.9	0.838	C	21.9	0.838	+ 0.000 D/V
# 46 Jefferson Ave & Ivy St/Los Ala	D	35.3	0.944	D	35.3	0.944	+ 0.000 D/V
# 48 Madison Ave/I-15 SB Ramps & Ka	C	32.7	0.913	C	32.7	0.913	+ 0.000 D/V
# 50 Hancock Ave & Murrieta Hot Spr	B	18.0	0.817	B	18.0	0.817	+ 0.000 D/V
# 51 Alta Murrieta Dr & Murrieta Ho	D	53.6	1.023	D	53.6	1.023	+ 0.000 D/V
# 52 Winchester Road - SR-79 & Murr	F	102.6	1.367	F	102.6	1.367	+ 0.000 D/V
# 53 Hancock Ave & Los Alamos Rd	F	238.4	1.650	F	238.4	1.650	+ 0.000 D/V
# 54 I-215 SB Ramps & Los Alamos Rd	F	168.4	1.466	F	168.4	1.466	+ 0.000 D/V
# 55 I-215 NB Ramps & Los Alamos Rd	C	24.4	0.914	C	24.4	0.914	+ 0.000 D/V
# 56 Whitewood Rd & Los Alamos Rd	D	44.7	0.992	D	44.7	0.992	+ 0.000 D/V
# 57 Whitewood Rd & Murrieta Hot Sp	F	90.3	1.167	F	90.3	1.167	+ 0.000 D/V
# 59 Nutmeg St & Clinton Keith Rd	F	81.0	1.161	F	81.0	1.161	+ 0.000 D/V
# 60 Murrieta Oaks Ave-Mitchell Rd	F	115.0	1.286	F	115.0	1.286	+ 0.000 D/V
# 61 I-215 SB Ramps & Scott Rd	A	8.2	0.377	A	8.2	0.377	+ 0.000 D/V

City of Murrieta General Plan
Future General Plan (Scenario B)
PM Peak Hour

Intersection	Base LOS	Base Del/ Veh	Base V/ C	Future LOS	Future Del/ Veh	Future V/ C	Change in
# 62 I-215 NB Ramps & Scott Rd	B	16.0	0.567	B	16.0	0.567	+ 0.000 D/V
#102 Leon Road & Scott Road	D	43.0	0.937	D	43.0	0.937	+ 0.000 D/V
#104 Antelope Road & Keller Road	D	48.0	0.932	D	48.0	0.932	+ 0.000 D/V
#105 Menifee Road - Meadowlark Road	D	42.2	0.940	D	42.2	0.940	+ 0.000 D/V
#107 Leon Road & Keller Road	B	15.6	0.366	B	15.6	0.366	+ 0.000 D/V
#108 Winchester Road - SR-79 & Kell	A	1.4	0.542	A	1.4	0.542	+ 0.000 D/V
#112 Leon Road & Jean Nicholas	C	26.4	0.697	C	26.4	0.697	+ 0.000 D/V
#122 Meadowlark Lane - Whitewood Ro	F	137.7	1.482	F	137.7	1.482	+ 0.000 D/V
#138 Jefferson Avenue & Cherry Stre	D	37.5	1.029	D	37.5	1.029	+ 0.000 D/V
#141 Jefferson Ave & Nutmeg St	D	35.1	0.899	D	35.1	0.899	+ 0.000 D/V
#142 Jefferson Ave & Magnolia St	A	9.0	0.502	A	9.0	0.502	+ 0.000 D/V
#149 Monroe Ave & Murrieta Hot Spri	B	16.4	0.568	B	16.4	0.568	+ 0.000 D/V
#158 Adams Ave & Guava St	B	14.6	0.374	B	14.6	0.374	+ 0.000 D/V

City of Murrieta General Plan
Future General Plan (Scenario B)
PM Peak Hour

Level Of Service Computation Report
2000 HCM Operations Method (Future Volume Alternative)

Intersection #1 Menifee Road & Scott Road

Cycle (sec): 100 Critical Vol./Cap.(X): 1.142
Loss Time (sec): 0 (Y+R=4.0 sec) Average Delay (sec/veh): 79.7
Optimal Cycle: 180 Level Of Service: E

Street Name:	Menifee Rd						Scott Rd					
Approach:	North Bound			South Bound			East Bound			West Bound		
Movement:	L	T	R	L	T	R	L	T	R	L	T	R
Control:	Protected			Protected			Protected			Protected		
Rights:	Include			Include			Include			Include		
Min. Green:	0	0	0	0	0	0	0	0	0	0	0	0
Lanes:	1 0	1	1 0	1 0	1	1 0	1 0	2	1 0	1 0	2	1 0
Volume Module:												
Base Vol:	277	619	816	203	319	103	254	930	476	442	549	550
Growth Adj:	1.00	1.00	1.00	1.00	1.00	1.00	1.00	1.00	1.00	1.00	1.00	1.00
Initial Bse:	277	619	816	203	319	103	254	930	476	442	549	550
Added Vol:	0	0	0	0	0	0	0	0	0	0	0	0
PasserByVol:	0	0	0	0	0	0	0	0	0	0	0	0
Initial Fut:	277	619	816	203	319	103	254	930	476	442	549	550
User Adj:	1.00	1.00	1.00	1.00	1.00	1.00	1.00	1.00	1.00	1.00	1.00	1.00
PHF Adj:	1.00	1.00	1.00	1.00	1.00	1.00	1.00	1.00	1.00	1.00	1.00	1.00
PHF Volume:	277	619	816	203	319	103	254	930	476	442	549	550
Reduct Vol:	0	0	0	0	0	0	0	0	0	0	0	0
Reduced Vol:	277	619	816	203	319	103	254	930	476	442	549	550
PCE Adj:	1.00	1.00	1.00	1.00	1.00	1.00	1.00	1.00	1.00	1.00	1.00	1.00
MLF Adj:	1.00	1.00	1.00	1.00	1.00	1.00	1.00	1.00	1.00	1.00	1.00	1.00
FinalVolume:	277	619	816	203	319	103	254	930	476	442	549	550
Saturation Flow Module:												
Sat/Lane:	1900	1900	1900	1900	1900	1900	1900	1900	1900	1900	1900	1900
Adjustment:	0.95	0.87	0.87	0.95	0.91	0.91	0.95	0.86	0.86	0.95	0.84	0.84
Lanes:	1.00	1.00	1.00	1.00	1.51	0.49	1.00	2.00	1.00	1.00	2.00	1.00
Final Sat.:	1805	1652	1652	1805	2628	849	1805	3282	1641	1805	3199	1599
Capacity Analysis Module:												
Vol/Sat:	0.15	0.37	0.49	0.11	0.12	0.12	0.14	0.28	0.29	0.24	0.17	0.34
Crit Moves:			****	****					****	****		
Green/Cycle:	0.30	0.43	0.43	0.10	0.23	0.23	0.14	0.25	0.25	0.21	0.33	0.33
Volume/Cap:	0.52	0.87	1.14	1.14	0.52	0.52	1.03	1.12	1.14	1.14	0.52	1.03
Delay/Veh:	30.1	30.8	102.0	155.7	33.9	33.9	109.8	100	111.1	129.4	27.1	70.1
User DelAdj:	1.00	1.00	1.00	1.00	1.00	1.00	1.00	1.00	1.00	1.00	1.00	1.00
AdjDel/Veh:	30.1	30.8	102.0	155.7	33.9	33.9	109.8	100	111.1	129.4	27.1	70.1
LOS by Move:	C	C	F	F	C	C	F	F	F	F	C	E
HCM2kAvgQ:	7	21	43	12	6	6	13	26	28	24	8	27

Note: Queue reported is the number of cars per lane.

City of Murrieta General Plan
Future General Plan (Scenario B)
PM Peak Hour

Level Of Service Computation Report
2000 HCM Operations Method (Future Volume Alternative)

Intersection #3 Winchester Road/SR-79 & Scott Road

Cycle (sec): 100 Critical Vol./Cap.(X): 1.866
Loss Time (sec): 0 (Y+R=4.0 sec) Average Delay (sec/veh): 281.2
Optimal Cycle: 180 Level Of Service: F

Street Name:	Winchester Road/SR-79						Scott Road					
Approach:	North Bound			South Bound			East Bound			West Bound		
Movement:	L - T - R			L - T - R			L - T - R			L - T - R		
Control:	Protected			Protected			Protected			Protected		
Rights:	Include			Include			Include			Include		
Min. Green:	0	0	0	0	0	0	0	0	0	0	0	0
Lanes:	1 0	2 1	0	1 0	2 1	0	1 0	2 1	0	1 0	2 1	0
Volume Module:												
Base Vol:	126	2471	28	1112	1886	129	117	292	123	0	222	1064
Growth Adj:	1.00	1.00	1.00	1.00	1.00	1.00	1.00	1.00	1.00	1.00	1.00	1.00
Initial Bse:	126	2471	28	1112	1886	129	117	292	123	0	222	1064
Added Vol:	0	0	0	0	0	0	0	0	0	0	0	0
PasserByVol:	0	0	0	0	0	0	0	0	0	0	0	0
Initial Fut:	126	2471	28	1112	1886	129	117	292	123	0	222	1064
User Adj:	1.00	1.00	1.00	1.00	1.00	1.00	1.00	1.00	1.00	1.00	1.00	1.00
PHF Adj:	1.00	1.00	1.00	1.00	1.00	1.00	1.00	1.00	1.00	1.00	1.00	1.00
PHF Volume:	126	2471	28	1112	1886	129	117	292	123	0	222	1064
Reduct Vol:	0	0	0	0	0	0	0	0	0	0	0	0
Reduced Vol:	126	2471	28	1112	1886	129	117	292	123	0	222	1064
PCE Adj:	1.00	1.00	1.00	1.00	1.00	1.00	1.00	1.00	1.00	1.00	1.00	1.00
MLF Adj:	1.00	1.00	1.00	1.00	1.00	1.00	1.00	1.00	1.00	1.00	1.00	1.00
FinalVolume:	126	2471	28	1112	1886	129	117	292	123	0	222	1064
Saturation Flow Module:												
Sat/Lane:	1900	1900	1900	1900	1900	1900	1900	1900	1900	1900	1900	1900
Adjustment:	0.95	0.91	0.91	0.95	0.90	0.90	0.95	0.87	0.87	1.00	0.80	0.80
Lanes:	1.00	2.97	0.03	1.00	2.81	0.19	1.00	2.11	0.89	1.00	2.00	1.00
Final Sat.:	1805	5119	58	1805	4806	329	1805	3489	1470	1900	3029	1515
Capacity Analysis Module:												
Vol/Sat:	0.07	0.48	0.48	0.62	0.39	0.39	0.06	0.08	0.08	0.00	0.07	0.70
Crit Moves:		****		****			****					****
Green/Cycle:	0.09	0.26	0.26	0.33	0.50	0.50	0.03	0.41	0.41	0.00	0.38	0.38
Volume/Cap:	0.78	1.87	1.87	1.87	0.78	0.78	1.87	0.20	0.20	0.00	0.19	1.87
Delay/Veh:	66.6	430	429.7	429.7	22.2	22.2	492.3	19.0	19.0	0.0	21.0	426.5
User DelAdj:	1.00	1.00	1.00	1.00	1.00	1.00	1.00	1.00	1.00	1.00	1.00	1.00
AdjDel/Veh:	66.6	430	429.7	429.7	22.2	22.2	492.3	19.0	19.0	0.0	21.0	426.5
LOS by Move:	E	F	F	F	C	C	F	B	B	A	C	F
HCM2kAvgQ:	6	81	81	97	20	20	12	3	3	0	3	102

Note: Queue reported is the number of cars per lane.

City of Murrieta General Plan
Future General Plan (Scenario B)
PM Peak Hour

Level Of Service Computation Report
2000 HCM Operations Method (Future Volume Alternative)

Intersection #6 Briggs Road & Keller Road

Cycle (sec): 100 Critical Vol./Cap.(X): 0.739
Loss Time (sec): 0 (Y+R=4.0 sec) Average Delay (sec/veh): 20.7
Optimal Cycle: 87 Level Of Service: C

Street Name:	Briggs Road						Keller Road					
Approach:	North Bound			South Bound			East Bound			West Bound		
Movement:	L - T - R			L - T - R			L - T - R			L - T - R		
Control:	Protected			Protected			Protected			Protected		
Rights:	Include			Include			Include			Include		
Min. Green:	0	0	0	0	0	0	0	0	0	0	0	0
Lanes:	1 0	1 1	0	1 0	1 1	0	1 0	1 1	0	1 0	1 1	0
Volume Module:												
Base Vol:	349	92	106	1	53	87	13	310	785	9	303	4
Growth Adj:	1.00	1.00	1.00	1.00	1.00	1.00	1.00	1.00	1.00	1.00	1.00	1.00
Initial Bse:	349	92	106	1	53	87	13	310	785	9	303	4
Added Vol:	0	0	0	0	0	0	0	0	0	0	0	0
PasserByVol:	0	0	0	0	0	0	0	0	0	0	0	0
Initial Fut:	349	92	106	1	53	87	13	310	785	9	303	4
User Adj:	1.00	1.00	1.00	1.00	1.00	1.00	1.00	1.00	1.00	1.00	1.00	1.00
PHF Adj:	1.00	1.00	1.00	1.00	1.00	1.00	1.00	1.00	1.00	1.00	1.00	1.00
PHF Volume:	349	92	106	1	53	87	13	310	785	9	303	4
Reduct Vol:	0	0	0	0	0	0	0	0	0	0	0	0
Reduced Vol:	349	92	106	1	53	87	13	310	785	9	303	4
PCE Adj:	1.00	1.00	1.00	1.00	1.00	1.00	1.00	1.00	1.00	1.00	1.00	1.00
MLF Adj:	1.00	1.00	1.00	1.00	1.00	1.00	1.00	1.00	1.00	1.00	1.00	1.00
FinalVolume:	349	92	106	1	53	87	13	310	785	9	303	4
Saturation Flow Module:												
Sat/Lane:	1900	1900	1900	1900	1900	1900	1900	1900	1900	1900	1900	1900
Adjustment:	0.95	0.87	0.87	0.95	0.86	0.86	0.95	0.85	0.85	0.95	0.95	0.95
Lanes:	1.00	1.00	1.00	1.00	1.00	1.00	1.00	1.00	1.00	1.00	1.97	0.03
Final Sat.:	1805	1661	1661	1805	1637	1637	1805	1610	1610	1805	3556	47
Capacity Analysis Module:												
Vol/Sat:	0.19	0.06	0.06	0.00	0.03	0.05	0.01	0.19	0.49	0.00	0.09	0.09
Crit Moves:	****					****			****	****		
Green/Cycle:	0.26	0.33	0.33	0.00	0.07	0.07	0.05	0.66	0.66	0.01	0.61	0.61
Volume/Cap:	0.74	0.17	0.19	0.19	0.45	0.74	0.14	0.29	0.74	0.74	0.14	0.14
Delay/Veh:	39.9	23.8	24.0	67.2	45.5	59.8	45.9	7.2	13.3	171.6	8.2	8.2
User DelAdj:	1.00	1.00	1.00	1.00	1.00	1.00	1.00	1.00	1.00	1.00	1.00	1.00
AdjDel/Veh:	39.9	23.8	24.0	67.2	45.5	59.8	45.9	7.2	13.3	171.6	8.2	8.2
LOS by Move:	D	C	C	E	D	E	D	A	B	F	A	A
HCM2kAvgQ:	11	2	2	0	2	4	1	4	18	1	2	2

Note: Queue reported is the number of cars per lane.

City of Murrieta General Plan
Future General Plan (Scenario B)
PM Peak Hour

Level Of Service Computation Report
2000 HCM Operations Method (Future Volume Alternative)

Intersection #9 Antelope Road & Golden City Drive - Baxter Road

Cycle (sec): 100 Critical Vol./Cap.(X): 1.429
Loss Time (sec): 0 (Y+R=4.0 sec) Average Delay (sec/veh): 83.1
Optimal Cycle: 180 Level Of Service: F

Street Name:	Antelope Road						Golden City Drive - Baxter Road					
Approach:	North Bound			South Bound			East Bound			West Bound		
Movement:	L -	T -	R	L -	T -	R	L -	T -	R	L -	T -	R
Control:	Permitted			Permitted			Permitted			Permitted		
Rights:	Include			Include			Include			Include		
Min. Green:	0	0	0	0	0	0	0	0	0	0	0	0
Lanes:	1 0	1	1 0	1 0	1	1 0	1 0	1	1 0	1 0	1	1 0
Volume Module:												
Base Vol:	2	300	837	264	1068	16	4	215	44	405	121	895
Growth Adj:	1.00	1.00	1.00	1.00	1.00	1.00	1.00	1.00	1.00	1.00	1.00	1.00
Initial Bse:	2	300	837	264	1068	16	4	215	44	405	121	895
Added Vol:	0	0	0	0	0	0	0	0	0	0	0	0
PasserByVol:	0	0	0	0	0	0	0	0	0	0	0	0
Initial Fut:	2	300	837	264	1068	16	4	215	44	405	121	895
User Adj:	1.00	1.00	1.00	1.00	1.00	1.00	1.00	1.00	1.00	1.00	1.00	1.00
PHF Adj:	1.00	1.00	1.00	1.00	1.00	1.00	1.00	1.00	1.00	1.00	1.00	1.00
PHF Volume:	2	300	837	264	1068	16	4	215	44	405	121	895
Reduct Vol:	0	0	0	0	0	0	0	0	0	0	0	0
Reduced Vol:	2	300	837	264	1068	16	4	215	44	405	121	895
PCE Adj:	1.00	1.00	1.00	1.00	1.00	1.00	1.00	1.00	1.00	1.00	1.00	1.00
MLF Adj:	1.00	1.00	1.00	1.00	1.00	1.00	1.00	1.00	1.00	1.00	1.00	1.00
FinalVolume:	2	300	837	264	1068	16	4	215	44	405	121	895
Saturation Flow Module:												
Sat/Lane:	1900	1900	1900	1900	1900	1900	1900	1900	1900	1900	1900	1900
Adjustment:	0.18	0.85	0.85	0.16	0.95	0.95	0.11	0.93	0.93	0.52	0.82	0.82
Lanes:	1.00	1.00	1.00	1.00	1.97	0.03	1.00	1.66	0.34	1.00	1.00	1.00
Final Sat.:	336	1606	1606	308	3550	53	217	2922	598	983	1567	1567
Capacity Analysis Module:												
Vol/Sat:	0.01	0.19	0.52	0.86	0.30	0.30	0.02	0.07	0.07	0.41	0.08	0.57
Crit Moves:				****								****
Green/Cycle:	0.60	0.60	0.60	0.60	0.60	0.60	0.40	0.40	0.40	0.40	0.40	0.40
Volume/Cap:	0.01	0.31	0.87	1.43	0.50	0.50	0.05	0.18	0.18	1.03	0.19	1.43
Delay/Veh:	8.1	9.9	23.1	241.3	11.6	11.6	18.6	19.5	19.5	83.4	19.5	231.1
User DelAdj:	1.00	1.00	1.00	1.00	1.00	1.00	1.00	1.00	1.00	1.00	1.00	1.00
AdjDel/Veh:	8.1	9.9	23.1	241.3	11.6	11.6	18.6	19.5	19.5	83.4	19.5	231.1
LOS by Move:	A	A	C	F	B	B	B	B	B	F	B	F
HCM2kAvgQ:	0	5	25	20	10	10	0	3	3	19	3	65

Note: Queue reported is the number of cars per lane.

City of Murrieta General Plan
Future General Plan (Scenario B)
PM Peak Hour

Level Of Service Computation Report
2000 HCM Operations Method (Future Volume Alternative)

Intersection #10 Whitewood Roa - /Meadowlark Road & Golden City Drive - Baxter R

Cycle (sec): 100 Critical Vol./Cap.(X): 1.386
Loss Time (sec): 0 (Y+R=4.0 sec) Average Delay (sec/veh): 121.3
Optimal Cycle: 180 Level Of Service: F

Street Name:	Whitewood Road - Meadowlark Road						Golden City Drive - Baxter Road					
Approach:	North Bound			South Bound			East Bound			West Bound		
Movement:	L -	T -	R	L -	T -	R	L -	T -	R	L -	T -	R
Control:	Protected			Protected			Protected			Protected		
Rights:	Include			Include			Include			Include		
Min. Green:	0	0	0	0	0	0	0	0	0	0	0	0
Lanes:	1 0	1	1 0	1 0	1	1 0	1 0	1	1 0	1 0	1	1 0
Volume Module:												
Base Vol:	271	1188	3	0	697	984	243	12	981	0	8	2
Growth Adj:	1.00	1.00	1.00	1.00	1.00	1.00	1.00	1.00	1.00	1.00	1.00	1.00
Initial Bse:	271	1188	3	0	697	984	243	12	981	0	8	2
Added Vol:	0	0	0	0	0	0	0	0	0	0	0	0
PasserByVol:	0	0	0	0	0	0	0	0	0	0	0	0
Initial Fut:	271	1188	3	0	697	984	243	12	981	0	8	2
User Adj:	1.00	1.00	1.00	1.00	1.00	1.00	1.00	1.00	1.00	1.00	1.00	1.00
PHF Adj:	1.00	1.00	1.00	1.00	1.00	1.00	1.00	1.00	1.00	1.00	1.00	1.00
PHF Volume:	271	1188	3	0	697	984	243	12	981	0	8	2
Reduct Vol:	0	0	0	0	0	0	0	0	0	0	0	0
Reduced Vol:	271	1188	3	0	697	984	243	12	981	0	8	2
PCE Adj:	1.00	1.00	1.00	1.00	1.00	1.00	1.00	1.00	1.00	1.00	1.00	1.00
MLF Adj:	1.00	1.00	1.00	1.00	1.00	1.00	1.00	1.00	1.00	1.00	1.00	1.00
FinalVolume:	271	1188	3	0	697	984	243	12	981	0	8	2
Saturation Flow Module:												
Sat/Lane:	1900	1900	1900	1900	1900	1900	1900	1900	1900	1900	1900	1900
Adjustment:	0.95	0.95	0.95	1.00	0.87	0.87	0.95	0.81	0.81	1.00	0.92	0.92
Lanes:	1.00	1.99	0.01	1.00	1.00	1.00	1.00	1.00	1.00	1.00	1.60	0.40
Final Sat.:	1805	3601	9	1900	1646	1646	1805	1538	1538	1900	2801	700
Capacity Analysis Module:												
Vol/Sat:	0.15	0.33	0.33	0.00	0.42	0.60	0.13	0.01	0.64	0.00	0.00	0.00
Crit Moves:	****					****			****	****		
Green/Cycle:	0.11	0.54	0.54	0.00	0.43	0.43	0.45	0.46	0.46	0.00	0.01	0.01
Volume/Cap:	1.39	0.61	0.61	0.00	0.98	1.39	0.30	0.02	1.39	0.00	0.30	0.30
Delay/Veh:	246.6	16.4	16.4	0.0	45.5	207.2	17.6	14.7	209.2	0.0	54.1	54.1
User DelAdj:	1.00	1.00	1.00	1.00	1.00	1.00	1.00	1.00	1.00	1.00	1.00	1.00
AdjDel/Veh:	246.6	16.4	16.4	0.0	45.5	207.2	17.6	14.7	209.2	0.0	54.1	54.1
LOS by Move:	F	B	B	A	D	F	B	B	F	A	D	D
HCM2kAvgQ:	20	13	13	0	29	68	5	0	68	0	0	0

Note: Queue reported is the number of cars per lane.

City of Murrieta General Plan
Future General Plan (Scenario B)
PM Peak Hour

Level Of Service Computation Report
2000 HCM Operations Method (Future Volume Alternative)

Intersection #11 Briggs Road & Baxter Road - Jean Nicholas

Cycle (sec): 100 | Critical Vol./Cap.(X): 0.245
Loss Time (sec): 0 (Y+R=4.0 sec) | Average Delay (sec/veh): 7.9
Optimal Cycle: 30 | Level Of Service: A

Street Name:	Briggs Road						Baxter Road - Jean Nicholas					
Approach:	North Bound			South Bound			East Bound			West Bound		
Movement:	L -	T -	R	L -	T -	R	L -	T -	R	L -	T -	R
Control:	Protected			Protected			Protected			Protected		
Rights:	Include			Include			Include			Include		
Min. Green:	0	0	0	0	0	0	0	0	0	0	0	0
Lanes:	0	0	1 1 0	1	0	2 0 0	0	0	0 0 0	1	0	0 0 1
Volume Module:												
Base Vol:	0	449	72	41	681	0	0	0	0	10	0	91
Growth Adj:	1.00	1.00	1.00	1.00	1.00	1.00	1.00	1.00	1.00	1.00	1.00	1.00
Initial Bse:	0	449	72	41	681	0	0	0	0	10	0	91
Added Vol:	0	0	0	0	0	0	0	0	0	0	0	0
PasserByVol:	0	0	0	0	0	0	0	0	0	0	0	0
Initial Fut:	0	449	72	41	681	0	0	0	0	10	0	91
User Adj:	1.00	1.00	1.00	1.00	1.00	1.00	1.00	1.00	1.00	1.00	1.00	1.00
PHF Adj:	1.00	1.00	1.00	1.00	1.00	1.00	1.00	1.00	1.00	1.00	1.00	1.00
PHF Volume:	0	449	72	41	681	0	0	0	0	10	0	91
Reduct Vol:	0	0	0	0	0	0	0	0	0	0	0	0
Reduced Vol:	0	449	72	41	681	0	0	0	0	10	0	91
PCE Adj:	1.00	1.00	1.00	1.00	1.00	1.00	1.00	1.00	1.00	1.00	1.00	1.00
MLF Adj:	1.00	1.00	1.00	1.00	1.00	1.00	1.00	1.00	1.00	1.00	1.00	1.00
FinalVolume:	0	449	72	41	681	0	0	0	0	10	0	91
Saturation Flow Module:												
Sat/Lane:	1900	1900	1900	1900	1900	1900	1900	1900	1900	1900	1900	1900
Adjustment:	1.00	0.93	0.93	0.95	0.95	1.00	1.00	1.00	1.00	0.95	1.00	0.85
Lanes:	0.00	1.72	0.28	1.00	2.00	0.00	0.00	0.00	0.00	1.00	0.00	1.00
Final Sat.:	0	3046	488	1805	3610	0	0	0	0	1805	0	1615
Capacity Analysis Module:												
Vol/Sat:	0.00	0.15	0.15	0.02	0.19	0.00	0.00	0.00	0.00	0.01	0.00	0.06
Crit Moves:	****				****							****
Green/Cycle:	0.00	0.67	0.67	0.10	0.77	0.00	0.00	0.00	0.00	0.23	0.00	0.23
Volume/Cap:	0.00	0.22	0.22	0.22	0.24	0.00	0.00	0.00	0.00	0.02	0.00	0.24
Delay/Veh:	0.0	6.5	6.5	41.8	3.3	0.0	0.0	0.0	0.0	29.8	0.0	31.8
User DelAdj:	1.00	1.00	1.00	1.00	1.00	1.00	1.00	1.00	1.00	1.00	1.00	1.00
AdjDel/Veh:	0.0	6.5	6.5	41.8	3.3	0.0	0.0	0.0	0.0	29.8	0.0	31.8
LOS by Move:	A	A	A	D	A	A	A	A	A	C	A	C
HCM2kAvgQ:	0	3	3	1	3	0	0	0	0	0	0	2

Note: Queue reported is the number of cars per lane.

City of Murrieta General Plan
Future General Plan (Scenario B)
PM Peak Hour

Level Of Service Computation Report
2000 HCM Operations Method (Future Volume Alternative)

Intersection #13 Winchester Road - SR-79 & Nicholas - Skyview

Cycle (sec): 100 | Critical Vol./Cap.(X): 0.910
Loss Time (sec): 0 (Y+R=4.0 sec) | Average Delay (sec/veh): 29.3
Optimal Cycle: 180 | Level Of Service: C

Street Name:	Winchester Road - SR-79						Nicholas - Skyview					
Approach:	North Bound			South Bound			East Bound			West Bound		
Movement:	L -	T -	R	L -	T -	R	L -	T -	R	L -	T -	R
Control:	Protected			Protected			Protected			Protected		
Rights:	Include			Include			Include			Include		
Min. Green:	0	0	0	0	0	0	0	0	0	0	0	0
Lanes:	1	0	2 1 0	1	0	2 1 0	1	0	1 1 0	1	0	1 1 0
Volume Module:												
Base Vol:	201	2651	200	77	2065	18	40	683	128	148	447	123
Growth Adj:	1.00	1.00	1.00	1.00	1.00	1.00	1.00	1.00	1.00	1.00	1.00	1.00
Initial Bse:	201	2651	200	77	2065	18	40	683	128	148	447	123
Added Vol:	0	0	0	0	0	0	0	0	0	0	0	0
PasserByVol:	0	0	0	0	0	0	0	0	0	0	0	0
Initial Fut:	201	2651	200	77	2065	18	40	683	128	148	447	123
User Adj:	1.00	1.00	1.00	1.00	1.00	1.00	1.00	1.00	1.00	1.00	1.00	1.00
PHF Adj:	1.00	1.00	1.00	1.00	1.00	1.00	1.00	1.00	1.00	1.00	1.00	1.00
PHF Volume:	201	2651	200	77	2065	18	40	683	128	148	447	123
Reduct Vol:	0	0	0	0	0	0	0	0	0	0	0	0
Reduced Vol:	201	2651	200	77	2065	18	40	683	128	148	447	123
PCE Adj:	1.00	1.00	1.00	1.00	1.00	1.00	1.00	1.00	1.00	1.00	1.00	1.00
MLF Adj:	1.00	1.00	1.00	1.00	1.00	1.00	1.00	1.00	1.00	1.00	1.00	1.00
FinalVolume:	201	2651	200	77	2065	18	40	683	128	148	447	123
Saturation Flow Module:												
Sat/Lane:	1900	1900	1900	1900	1900	1900	1900	1900	1900	1900	1900	1900
Adjustment:	0.95	0.90	0.90	0.95	0.91	0.91	0.95	0.93	0.93	0.95	0.92	0.92
Lanes:	1.00	2.79	0.21	1.00	2.97	0.03	1.00	1.68	0.32	1.00	1.57	0.43
Final Sat.:	1805	4775	360	1805	5137	45	1805	2967	556	1805	2740	754
Capacity Analysis Module:												
Vol/Sat:	0.11	0.56	0.56	0.04	0.40	0.40	0.02	0.23	0.23	0.08	0.16	0.16
Crit Moves:		****		****				****		****		
Green/Cycle:	0.14	0.61	0.61	0.05	0.51	0.51	0.04	0.25	0.25	0.09	0.30	0.30
Volume/Cap:	0.78	0.91	0.91	0.91	0.78	0.78	0.54	0.91	0.91	0.91	0.54	0.54
Delay/Veh:	55.7	21.6	21.6	115.9	21.3	21.3	54.8	49.4	49.4	90.3	29.7	29.7
User DelAdj:	1.00	1.00	1.00	1.00	1.00	1.00	1.00	1.00	1.00	1.00	1.00	1.00
AdjDel/Veh:	55.7	21.6	21.6	115.9	21.3	21.3	54.8	49.4	49.4	90.3	29.7	29.7
LOS by Move:	E	C	C	F	C	C	D	D	D	F	C	C
HCM2kAvgQ:	8	32	32	5	20	20	2	17	17	8	8	8

Note: Queue reported is the number of cars per lane.

City of Murrieta General Plan
Future General Plan (Scenario B)
PM Peak Hour

Level Of Service Computation Report
2000 HCM Operations Method (Future Volume Alternative)

Intersection #14 Antelope Road & Linnel Lane Extension

Cycle (sec): 100 | Critical Vol./Cap.(X): 0.844
Loss Time (sec): 0 (Y+R=4.0 sec) | Average Delay (sec/veh): 28.1
Optimal Cycle: 146 | Level Of Service: C

Street Name:	Antelope Road						Linnel Lane Extension					
Approach:	North Bound			South Bound			East Bound			West Bound		
Movement:	L -	T -	R	L -	T -	R	L -	T -	R	L -	T -	R
Control:	Protected			Protected			Protected			Protected		
Rights:	Include			Include			Include			Include		
Min. Green:	0	0	0	0	0	0	0	0	0	0	0	0
Lanes:	1 0	1	1 0	1 0	1	1 0	1 0	1	1 0	1 0	1	1 0
Volume Module:												
Base Vol:	48	594	162	82	1105	613	85	463	310	51	563	348
Growth Adj:	1.00	1.00	1.00	1.00	1.00	1.00	1.00	1.00	1.00	1.00	1.00	1.00
Initial Bse:	48	594	162	82	1105	613	85	463	310	51	563	348
Added Vol:	0	0	0	0	0	0	0	0	0	0	0	0
PasserByVol:	0	0	0	0	0	0	0	0	0	0	0	0
Initial Fut:	48	594	162	82	1105	613	85	463	310	51	563	348
User Adj:	1.00	1.00	1.00	1.00	1.00	1.00	1.00	1.00	1.00	1.00	1.00	1.00
PHF Adj:	1.00	1.00	1.00	1.00	1.00	1.00	1.00	1.00	1.00	1.00	1.00	1.00
PHF Volume:	48	594	162	82	1105	613	85	463	310	51	563	348
Reduct Vol:	0	0	0	0	0	0	0	0	0	0	0	0
Reduced Vol:	48	594	162	82	1105	613	85	463	310	51	563	348
PCE Adj:	1.00	1.00	1.00	1.00	1.00	1.00	1.00	1.00	1.00	1.00	1.00	1.00
MLF Adj:	1.00	1.00	1.00	1.00	1.00	1.00	1.00	1.00	1.00	1.00	1.00	1.00
FinalVolume:	48	594	162	82	1105	613	85	463	310	51	563	348
Saturation Flow Module:												
Sat/Lane:	1900	1900	1900	1900	1900	1900	1900	1900	1900	1900	1900	1900
Adjustment:	0.95	0.92	0.92	0.95	0.90	0.90	0.95	0.89	0.89	0.95	0.90	0.90
Lanes:	1.00	1.57	0.43	1.00	1.29	0.71	1.00	1.20	0.80	1.00	1.24	0.76
Final Sat.:	1805	2746	749	1805	2197	1219	1805	2033	1361	1805	2104	1300
Capacity Analysis Module:												
Vol/Sat:	0.03	0.22	0.22	0.05	0.50	0.50	0.05	0.23	0.23	0.03	0.27	0.27
Crit Moves:	****				****		****				****	
Green/Cycle:	0.03	0.52	0.52	0.11	0.60	0.60	0.06	0.33	0.33	0.04	0.32	0.32
Volume/Cap:	0.84	0.42	0.42	0.42	0.84	0.84	0.84	0.69	0.69	0.69	0.84	0.84
Delay/Veh:	114.5	15.0	15.0	43.0	19.9	19.9	91.3	30.7	30.7	71.0	38.1	38.1
User DelAdj:	1.00	1.00	1.00	1.00	1.00	1.00	1.00	1.00	1.00	1.00	1.00	1.00
AdjDel/Veh:	114.5	15.0	15.0	43.0	19.9	19.9	91.3	30.7	30.7	71.0	38.1	38.1
LOS by Move:	F	B	B	D	B	B	F	C	C	E	D	D
HCM2kAvgQ:	3	8	8	3	25	25	5	12	12	3	16	16

Note: Queue reported is the number of cars per lane.

City of Murrieta General Plan
Future General Plan (Scenario B)
PM Peak Hour

Level Of Service Computation Report
2000 HCM Operations Method (Future Volume Alternative)

Intersection #15 Whitewood Road - Meadowlark Road & Linnel Lane Extension

Cycle (sec): 100 | Critical Vol./Cap.(X): 0.984
Loss Time (sec): 0 (Y+R=4.0 sec) | Average Delay (sec/veh): 40.7
Optimal Cycle: 180 | Level Of Service: D

Street Name:	Whitewood Road - Meadowlark Road						Linnel Lane Extension (Future)					
Approach:	North Bound			South Bound			East Bound			West Bound		
Movement:	L -	T -	R	L -	T -	R	L -	T -	R	L -	T -	R
Control:	Protected			Protected			Protected			Protected		
Rights:	Include			Include			Include			Include		
Min. Green:	0	0	0	0	0	0	0	0	0	0	0	0
Lanes:	1 0	1	1 0	1 0	1	1 0	1 0	1	1 0	1 0	1	1 0
Volume Module:												
Base Vol:	27	581	514	153	1498	200	26	458	224	274	734	792
Growth Adj:	1.00	1.00	1.00	1.00	1.00	1.00	1.00	1.00	1.00	1.00	1.00	1.00
Initial Bse:	27	581	514	153	1498	200	26	458	224	274	734	792
Added Vol:	0	0	0	0	0	0	0	0	0	0	0	0
PasserByVol:	0	0	0	0	0	0	0	0	0	0	0	0
Initial Fut:	27	581	514	153	1498	200	26	458	224	274	734	792
User Adj:	1.00	1.00	1.00	1.00	1.00	1.00	1.00	1.00	1.00	1.00	1.00	1.00
PHF Adj:	1.00	1.00	1.00	1.00	1.00	1.00	1.00	1.00	1.00	1.00	1.00	1.00
PHF Volume:	27	581	514	153	1498	200	26	458	224	274	734	792
Reduct Vol:	0	0	0	0	0	0	0	0	0	0	0	0
Reduced Vol:	27	581	514	153	1498	200	26	458	224	274	734	792
PCE Adj:	1.00	1.00	1.00	1.00	1.00	1.00	1.00	1.00	1.00	1.00	1.00	1.00
MLF Adj:	1.00	1.00	1.00	1.00	1.00	1.00	1.00	1.00	1.00	1.00	1.00	1.00
FinalVolume:	27	581	514	153	1498	200	26	458	224	274	734	792
Saturation Flow Module:												
Sat/Lane:	1900	1900	1900	1900	1900	1900	1900	1900	1900	1900	1900	1900
Adjustment:	0.95	0.88	0.88	0.95	0.93	0.93	0.95	0.90	0.90	0.95	0.88	0.88
Lanes:	1.00	1.06	0.94	1.00	1.76	0.24	1.00	1.34	0.66	1.00	1.00	1.00
Final Sat.:	1805	1781	1576	1805	3127	418	1805	2306	1128	1805	1664	1664
Capacity Analysis Module:												
Vol/Sat:	0.01	0.33	0.33	0.08	0.48	0.48	0.01	0.20	0.20	0.15	0.44	0.48
Crit Moves:	****				****		****					****
Green/Cycle:	0.02	0.40	0.40	0.10	0.49	0.49	0.01	0.28	0.28	0.22	0.48	0.48
Volume/Cap:	0.98	0.82	0.82	0.82	0.98	0.98	0.98	0.70	0.70	0.70	0.91	0.98
Delay/Veh:	214.0	31.0	31.0	67.8	43.3	43.3	217.3	34.5	34.5	42.0	31.9	44.6
User DelAdj:	1.00	1.00	1.00	1.00	1.00	1.00	1.00	1.00	1.00	1.00	1.00	1.00
AdjDel/Veh:	214.0	31.0	31.0	67.8	43.3	43.3	217.3	34.5	34.5	42.0	31.9	44.6
LOS by Move:	F	C	C	E	D	D	F	C	C	D	C	D
HCM2kAvgQ:	3	18	18	7	34	34	2	11	11	9	26	32

Note: Queue reported is the number of cars per lane.

City of Murrieta General Plan
Future General Plan (Scenario B)
PM Peak Hour

Level Of Service Computation Report
2000 HCM Operations Method (Future Volume Alternative)

Intersection #16 Leon Road & Max Gillis Road

Cycle (sec): 100 Critical Vol./Cap.(X): 0.916
Loss Time (sec): 0 (Y+R=4.0 sec) Average Delay (sec/veh): 39.7
Optimal Cycle: 180 Level Of Service: D

Street Name:	Leon Road						Max Gillis Road					
Approach:	North Bound			South Bound			East Bound			West Bound		
Movement:	L -	T -	R	L -	T -	R	L -	T -	R	L -	T -	R
Control:	Protected			Protected			Protected			Protected		
Rights:	Include			Include			Include			Include		
Min. Green:	0	0	0	0	0	0	0	0	0	0	0	0
Lanes:	2	0 2	0 1	2	0 1	1 0	2	0 1	1 0	2	0 1	0 1
Volume Module:												
Base Vol:	517	405	579	371	254	131	104	213	467	570	366	382
Growth Adj:	1.00	1.00	1.00	1.00	1.00	1.00	1.00	1.00	1.00	1.00	1.00	1.00
Initial Bse:	517	405	579	371	254	131	104	213	467	570	366	382
Added Vol:	0	0	0	0	0	0	0	0	0	0	0	0
PasserByVol:	0	0	0	0	0	0	0	0	0	0	0	0
Initial Fut:	517	405	579	371	254	131	104	213	467	570	366	382
User Adj:	1.00	1.00	1.00	1.00	1.00	1.00	1.00	1.00	1.00	1.00	1.00	1.00
PHF Adj:	1.00	1.00	1.00	1.00	1.00	1.00	1.00	1.00	1.00	1.00	1.00	1.00
PHF Volume:	517	405	579	371	254	131	104	213	467	570	366	382
Reduct Vol:	0	0	0	0	0	0	0	0	0	0	0	0
Reduced Vol:	517	405	579	371	254	131	104	213	467	570	366	382
PCE Adj:	1.00	1.00	1.00	1.00	1.00	1.00	1.00	1.00	1.00	1.00	1.00	1.00
MLF Adj:	1.00	1.00	1.00	1.00	1.00	1.00	1.00	1.00	1.00	1.00	1.00	1.00
FinalVolume:	517	405	579	371	254	131	104	213	467	570	366	382
Saturation Flow Module:												
Sat/Lane:	1900	1900	1900	1900	1900	1900	1900	1900	1900	1900	1900	1900
Adjustment:	0.92	0.95	0.85	0.92	0.90	0.90	0.92	0.85	0.85	0.92	1.00	0.85
Lanes:	2.00	2.00	1.00	2.00	1.32	0.68	2.00	1.00	1.00	2.00	1.00	1.00
Final Sat.:	3502	3610	1615	3502	2260	1166	3502	1619	1619	3502	1900	1615
Capacity Analysis Module:												
Vol/Sat:	0.15	0.11	0.36	0.11	0.11	0.11	0.03	0.13	0.29	0.16	0.19	0.24
Crit Moves:			****	****					****	****		
Green/Cycle:	0.29	0.39	0.39	0.12	0.22	0.22	0.05	0.31	0.31	0.18	0.44	0.44
Volume/Cap:	0.51	0.29	0.92	0.92	0.51	0.51	0.54	0.42	0.92	0.92	0.44	0.54
Delay/Veh:	30.2	21.0	47.0	68.8	34.9	34.9	49.1	27.2	49.0	58.7	19.9	21.5
User DelAdj:	1.00	1.00	1.00	1.00	1.00	1.00	1.00	1.00	1.00	1.00	1.00	1.00
AdjDel/Veh:	30.2	21.0	47.0	68.8	34.9	34.9	49.1	27.2	49.0	58.7	19.9	21.5
LOS by Move:	C	C	D	E	C	C	D	C	D	E	B	C
HCM2kAvgQ:	7	4	21	9	6	6	2	6	19	13	8	9

Note: Queue reported is the number of cars per lane.

City of Murrieta General Plan
Future General Plan (Scenario B)
PM Peak Hour

Level Of Service Computation Report
2000 HCM Operations Method (Future Volume Alternative)

Intersection #17 Winchester Road - SR-79 & Max Gillis - Thompson

Cycle (sec): 100 Critical Vol./Cap.(X): 0.959
Loss Time (sec): 0 (Y+R=4.0 sec) Average Delay (sec/veh): 37.3
Optimal Cycle: 180 Level Of Service: D

Street Name:	Winchester Road - SR-79						Max Gillis - Thompson					
Approach:	North Bound			South Bound			East Bound			West Bound		
Movement:	L -	T -	R	L -	T -	R	L -	T -	R	L -	T -	R
Control:	Protected			Protected			Protected			Protected		
Rights:	Include			Include			Include			Include		
Min. Green:	0	0	0	0	0	0	0	0	0	0	0	0
Lanes:	1	0 2	1 0	1	0 3	0 1	2	0 2	0 1	1	0 1	1 0
Volume Module:												
Base Vol:	244	2443	86	297	1330	662	732	322	145	32	248	82
Growth Adj:	1.00	1.00	1.00	1.00	1.00	1.00	1.00	1.00	1.00	1.00	1.00	1.00
Initial Bse:	244	2443	86	297	1330	662	732	322	145	32	248	82
Added Vol:	0	0	0	0	0	0	0	0	0	0	0	0
PasserByVol:	0	0	0	0	0	0	0	0	0	0	0	0
Initial Fut:	244	2443	86	297	1330	662	732	322	145	32	248	82
User Adj:	1.00	1.00	1.00	1.00	1.00	1.00	1.00	1.00	1.00	1.00	1.00	1.00
PHF Adj:	1.00	1.00	1.00	1.00	1.00	1.00	1.00	1.00	1.00	1.00	1.00	1.00
PHF Volume:	244	2443	86	297	1330	662	732	322	145	32	248	82
Reduct Vol:	0	0	0	0	0	0	0	0	0	0	0	0
Reduced Vol:	244	2443	86	297	1330	662	732	322	145	32	248	82
PCE Adj:	1.00	1.00	1.00	1.00	1.00	1.00	1.00	1.00	1.00	1.00	1.00	1.00
MLF Adj:	1.00	1.00	1.00	1.00	1.00	1.00	1.00	1.00	1.00	1.00	1.00	1.00
FinalVolume:	244	2443	86	297	1330	662	732	322	145	32	248	82
Saturation Flow Module:												
Sat/Lane:	1900	1900	1900	1900	1900	1900	1900	1900	1900	1900	1900	1900
Adjustment:	0.95	0.91	0.91	0.95	0.91	0.85	0.92	0.95	0.85	0.95	0.91	0.91
Lanes:	1.00	2.90	0.10	1.00	3.00	1.00	2.00	2.00	1.00	1.00	1.50	0.50
Final Sat.:	1805	4986	176	1805	5187	1615	3502	3610	1615	1805	2613	864
Capacity Analysis Module:												
Vol/Sat:	0.14	0.49	0.49	0.16	0.26	0.41	0.21	0.09	0.09	0.02	0.09	0.09
Crit Moves:		****		****			****				****	
Green/Cycle:	0.17	0.51	0.51	0.17	0.51	0.51	0.22	0.26	0.26	0.05	0.10	0.10
Volume/Cap:	0.80	0.96	0.96	0.96	0.50	0.80	0.96	0.34	0.34	0.34	0.96	0.96
Delay/Veh:	53.6	33.1	33.1	81.0	16.1	25.5	61.5	29.9	30.2	47.9	82.3	82.3
User DelAdj:	1.00	1.00	1.00	1.00	1.00	1.00	1.00	1.00	1.00	1.00	1.00	1.00
AdjDel/Veh:	53.6	33.1	33.1	81.0	16.1	25.5	61.5	29.9	30.2	47.9	82.3	82.3
LOS by Move:	D	C	C	F	B	C	E	C	C	D	F	F
HCM2kAvgQ:	9	33	33	14	10	19	16	4	4	1	9	9

Note: Queue reported is the number of cars per lane.

City of Murrieta General Plan
Future General Plan (Scenario B)
PM Peak Hour

Level Of Service Computation Report
2000 HCM Operations Method (Future Volume Alternative)

Intersection #18 California Oaks Road & Clinton Keith Road

Cycle (sec): 100 | Critical Vol./Cap.(X): 0.936
Loss Time (sec): 0 (Y+R=4.0 sec) | Average Delay (sec/veh): 23.6
Optimal Cycle: 180 | Level Of Service: C

Street Name:	California Oaks Road						Clinton Keith Road					
Approach:	North Bound			South Bound			East Bound			West Bound		
Movement:	L	T	R	L	T	R	L	T	R	L	T	R
Control:	Protected			Protected			Protected			Protected		
Rights:	Ovl			Include			Include			Include		
Min. Green:	0	0	0	0	0	0	0	0	0	0	0	0
Lanes:	1 0	0	0 2	0 0	0	0 0	0 0	2	1 0	1 0	3	0 0
Volume Module:												
Base Vol:	312	0	1105	0	0	0	0	2509	123	456	2578	0
Growth Adj:	1.00	1.00	1.00	1.00	1.00	1.00	1.00	1.00	1.00	1.00	1.00	1.00
Initial Bse:	312	0	1105	0	0	0	0	2509	123	456	2578	0
Added Vol:	0	0	0	0	0	0	0	0	0	0	0	0
PasserByVol:	0	0	0	0	0	0	0	0	0	0	0	0
Initial Fut:	312	0	1105	0	0	0	0	2509	123	456	2578	0
User Adj:	1.00	1.00	1.00	1.00	1.00	1.00	1.00	1.00	1.00	1.00	1.00	1.00
PHF Adj:	1.00	1.00	1.00	1.00	1.00	1.00	1.00	1.00	1.00	1.00	1.00	1.00
PHF Volume:	312	0	1105	0	0	0	0	2509	123	456	2578	0
Reduct Vol:	0	0	0	0	0	0	0	0	0	0	0	0
Reduced Vol:	312	0	1105	0	0	0	0	2509	123	456	2578	0
PCE Adj:	1.00	1.00	1.00	1.00	1.00	1.00	1.00	1.00	1.00	1.00	1.00	1.00
MLF Adj:	1.00	1.00	1.00	1.00	1.00	1.00	1.00	1.00	1.00	1.00	1.00	1.00
FinalVolume:	312	0	1105	0	0	0	0	2509	123	456	2578	0
Saturation Flow Module:												
Sat/Lane:	1900	1900	1900	1900	1900	1900	1900	1900	1900	1900	1900	1900
Adjustment:	0.95	1.00	0.75	1.00	1.00	1.00	1.00	0.90	0.90	0.95	0.91	1.00
Lanes:	1.00	0.00	2.00	0.00	0.00	0.00	0.00	2.86	0.14	1.00	3.00	0.00
Final Sat.:	1805	0	2842	0	0	0	0	4910	241	1805	5187	0
Capacity Analysis Module:												
Vol/Sat:	0.17	0.00	0.39	0.00	0.00	0.00	0.00	0.51	0.51	0.25	0.50	0.00
Crit Moves:	****							****		****		
Green/Cycle:	0.18	0.00	0.45	0.00	0.00	0.00	0.00	0.55	0.55	0.27	0.82	0.00
Volume/Cap:	0.94	0.00	0.86	0.00	0.00	0.00	0.00	0.94	0.94	0.94	0.61	0.00
Delay/Veh:	73.3	0.0	30.2	0.0	0.0	0.0	0.0	28.0	28.0	61.4	3.6	0.0
User DelAdj:	1.00	1.00	1.00	1.00	1.00	1.00	1.00	1.00	1.00	1.00	1.00	1.00
AdjDel/Veh:	73.3	0.0	30.2	0.0	0.0	0.0	0.0	28.0	28.0	61.4	3.6	0.0
LOS by Move:	E	A	C	A	A	A	A	C	C	E	A	A
HCM2kAvgQ:	14	0	20	0	0	0	0	33	33	18	11	0

Note: Queue reported is the number of cars per lane.

City of Murrieta General Plan
Future General Plan (Scenario B)
PM Peak Hour

Level Of Service Computation Report
2000 HCM Operations Method (Future Volume Alternative)

Intersection #19 I-215 SB Off-Ramp & Clinton Keith Road

Cycle (sec): 100 | Critical Vol./Cap.(X): 0.740
Loss Time (sec): 0 (Y+R=4.0 sec) | Average Delay (sec/veh): 12.5
Optimal Cycle: 88 | Level Of Service: B

Street Name:	I-215 SB Off-Ramp						Clinton Keith Road					
Approach:	North Bound			South Bound			East Bound			West Bound		
Movement:	L	T	R	L	T	R	L	T	R	L	T	R
Control:	Split Phase			Split Phase			Protected			Protected		
Rights:	Include			Include			Include			Ignore		
Min. Green:	0	0	0	0	0	0	0	0	0	0	0	0
Lanes:	0 0	0	0 0	0 1	0	0 2	0 0	3	0 1	0 0	3	0 1
Volume Module:												
Base Vol:	0	0	0	36	0	628	0	2693	826	0	2635	207
Growth Adj:	1.00	1.00	1.00	1.00	1.00	1.00	1.00	1.00	1.00	1.00	1.00	1.00
Initial Bse:	0	0	0	36	0	628	0	2693	826	0	2635	207
Added Vol:	0	0	0	0	0	0	0	0	0	0	0	0
PasserByVol:	0	0	0	0	0	0	0	0	0	0	0	0
Initial Fut:	0	0	0	36	0	628	0	2693	826	0	2635	207
User Adj:	1.00	1.00	1.00	1.00	1.00	1.00	1.00	1.00	1.00	1.00	1.00	0.00
PHF Adj:	1.00	1.00	1.00	1.00	1.00	1.00	1.00	1.00	1.00	1.00	1.00	0.00
PHF Volume:	0	0	0	36	0	628	0	2693	826	0	2635	0
Reduct Vol:	0	0	0	0	0	0	0	0	0	0	0	0
Reduced Vol:	0	0	0	36	0	628	0	2693	826	0	2635	0
PCE Adj:	1.00	1.00	1.00	1.00	1.00	1.00	1.00	1.00	1.00	1.00	1.00	0.00
MLF Adj:	1.00	1.00	1.00	1.00	1.00	1.00	1.00	1.00	1.00	1.00	1.00	0.00
FinalVolume:	0	0	0	36	0	628	0	2693	826	0	2635	0
Saturation Flow Module:												
Sat/Lane:	1900	1900	1900	1900	1900	1900	1900	1900	1900	1900	1900	1900
Adjustment:	1.00	1.00	1.00	0.95	1.00	0.75	1.00	0.91	0.85	1.00	0.91	1.00
Lanes:	0.00	0.00	0.00	1.00	0.00	2.00	0.00	3.00	1.00	0.00	3.00	1.00
Final Sat.:	0	0	0	1809	0	2842	0	5187	1615	0	5187	1900
Capacity Analysis Module:												
Vol/Sat:	0.00	0.00	0.00	0.02	0.00	0.22	0.00	0.52	0.51	0.00	0.51	0.00
Crit Moves:						****		****		****		
Green/Cycle:	0.00	0.00	0.00	0.30	0.00	0.30	0.00	0.70	0.70	0.00	0.70	0.00
Volume/Cap:	0.00	0.00	0.00	0.07	0.00	0.74	0.00	0.74	0.73	0.00	0.72	0.00
Delay/Veh:	0.0	0.0	0.0	25.2	0.0	35.1	0.0	10.1	11.6	0.0	9.8	0.0
User DelAdj:	1.00	1.00	1.00	1.00	1.00	1.00	1.00	1.00	1.00	1.00	1.00	1.00
AdjDel/Veh:	0.0	0.0	0.0	25.2	0.0	35.1	0.0	10.1	11.6	0.0	9.8	0.0
LOS by Move:	A	A	A	C	A	D	A	B	B	A	A	A
HCM2kAvgQ:	0	0	0	1	0	11	0	20	17	0	19	0

Note: Queue reported is the number of cars per lane.

City of Murrieta General Plan
Future General Plan (Scenario B)
PM Peak Hour

Level Of Service Computation Report
2000 HCM Operations Method (Future Volume Alternative)

Intersection #20 I-215 NB Off Ramp & Clinton Keith Road

Cycle (sec): 100 Critical Vol./Cap.(X): 0.858
Loss Time (sec): 0 (Y+R=4.0 sec) Average Delay (sec/veh): 17.8
Optimal Cycle: 161 Level Of Service: B

Street Name:	I-215 NB Off Ramp						Clinton Keith Road					
Approach:	North Bound			South Bound			East Bound			West Bound		
Movement:	L	T	R	L	T	R	L	T	R	L	T	R
Control:	Split Phase			Split Phase			Protected			Protected		
Rights:	Include			Include			Include			Ignore		
Min. Green:	0	0	0	0	0	0	0	0	0	0	0	0
Lanes:	1 0	0 0	1	0 0	0 0	0	0 0	3 0	1	0 0	3 0	1
Volume Module:												
Base Vol:	517	0	464	0	0	0	0	1524	283	0	2960	253
Growth Adj:	1.00	1.00	1.00	1.00	1.00	1.00	1.00	1.00	1.00	1.00	1.00	1.00
Initial Bse:	517	0	464	0	0	0	0	1524	283	0	2960	253
Added Vol:	0	0	0	0	0	0	0	0	0	0	0	0
PasserByVol:	0	0	0	0	0	0	0	0	0	0	0	0
Initial Fut:	517	0	464	0	0	0	0	1524	283	0	2960	253
User Adj:	1.00	1.00	1.00	1.00	1.00	1.00	1.00	1.00	1.00	1.00	1.00	0.00
PHF Adj:	1.00	1.00	1.00	1.00	1.00	1.00	1.00	1.00	1.00	1.00	1.00	0.00
PHF Volume:	517	0	464	0	0	0	0	1524	283	0	2960	0
Reduct Vol:	0	0	0	0	0	0	0	0	0	0	0	0
Reduced Vol:	517	0	464	0	0	0	0	1524	283	0	2960	0
PCE Adj:	1.00	1.00	1.00	1.00	1.00	1.00	1.00	1.00	1.00	1.00	1.00	0.00
MLF Adj:	1.00	1.00	1.00	1.00	1.00	1.00	1.00	1.00	1.00	1.00	1.00	0.00
FinalVolume:	517	0	464	0	0	0	0	1524	283	0	2960	0
Saturation Flow Module:												
Sat/Lane:	1900	1900	1900	1900	1900	1900	1900	1900	1900	1900	1900	1900
Adjustment:	0.95	1.00	0.85	1.00	1.00	1.00	1.00	0.91	0.85	1.00	0.91	1.00
Lanes:	1.00	0.00	1.00	0.00	0.00	0.00	0.00	3.00	1.00	0.00	3.00	1.00
Final Sat.:	1805	0	1615	0	0	0	0	5187	1615	0	5187	1900
Capacity Analysis Module:												
Vol/Sat:	0.29	0.00	0.29	0.00	0.00	0.00	0.00	0.29	0.18	0.00	0.57	0.00
Crit Moves:			****				****				****	
Green/Cycle:	0.33	0.00	0.33	0.00	0.00	0.00	0.00	0.67	0.67	0.00	0.67	0.00
Volume/Cap:	0.86	0.00	0.86	0.00	0.00	0.00	0.00	0.44	0.26	0.00	0.86	0.00
Delay/Veh:	42.5	0.0	44.0	0.0	0.0	0.0	0.0	8.0	6.9	0.0	15.4	0.0
User DelAdj:	1.00	1.00	1.00	1.00	1.00	1.00	1.00	1.00	1.00	1.00	1.00	1.00
AdjDel/Veh:	42.5	0.0	44.0	0.0	0.0	0.0	0.0	8.0	6.9	0.0	15.4	0.0
LOS by Move:	D	A	D	A	A	A	A	A	A	A	B	A
HCM2kAvgQ:	18	0	16	0	0	0	0	8	4	0	28	0

Note: Queue reported is the number of cars per lane.

City of Murrieta General Plan
Future General Plan (Scenario B)
PM Peak Hour

Level Of Service Computation Report
2000 HCM Operations Method (Future Volume Alternative)

Intersection #21 Antelope Road & Clinton Keith Road

Cycle (sec): 100 Critical Vol./Cap.(X): 0.494
Loss Time (sec): 0 (Y+R=4.0 sec) Average Delay (sec/veh): 3.8
Optimal Cycle: 45 Level Of Service: A

Street Name:	Antelope Road						Clinton Keith Road					
Approach:	North Bound			South Bound			East Bound			West Bound		
Movement:	L	T	R	L	T	R	L	T	R	L	T	R
Control:	Protected			Protected			Protected			Protected		
Rights:	Include			Ignore			Include			Include		
Min. Green:	0	0	0	0	0	0	0	0	0	0	0	0
Lanes:	0 0	0 0	0	2 0	0 0	2	2 0	3 0	0	0 0	2 1	0
Volume Module:												
Base Vol:	0	0	0	111	0	926	147	2057	0	0	1746	375
Growth Adj:	1.00	1.00	1.00	1.00	1.00	1.00	1.00	1.00	1.00	1.00	1.00	1.00
Initial Bse:	0	0	0	111	0	926	147	2057	0	0	1746	375
Added Vol:	0	0	0	0	0	0	0	0	0	0	0	0
PasserByVol:	0	0	0	0	0	0	0	0	0	0	0	0
Initial Fut:	0	0	0	111	0	926	147	2057	0	0	1746	375
User Adj:	1.00	1.00	1.00	1.00	1.00	0.00	1.00	1.00	1.00	1.00	1.00	1.00
PHF Adj:	1.00	1.00	1.00	1.00	1.00	0.00	1.00	1.00	1.00	1.00	1.00	1.00
PHF Volume:	0	0	0	111	0	0	147	2057	0	0	1746	375
Reduct Vol:	0	0	0	0	0	0	0	0	0	0	0	0
Reduced Vol:	0	0	0	111	0	0	147	2057	0	0	1746	375
PCE Adj:	1.00	1.00	1.00	1.00	1.00	0.00	1.00	1.00	1.00	1.00	1.00	1.00
MLF Adj:	1.00	1.00	1.00	1.00	1.00	0.00	1.00	1.00	1.00	1.00	1.00	1.00
FinalVolume:	0	0	0	111	0	0	147	2057	0	0	1746	375
Saturation Flow Module:												
Sat/Lane:	1900	1900	1900	1900	1900	1900	1900	1900	1900	1900	1900	1900
Adjustment:	1.00	1.00	1.00	0.92	1.00	0.88	0.92	0.91	1.00	1.00	0.89	0.89
Lanes:	0.00	0.00	0.00	2.00	0.00	2.00	2.00	3.00	0.00	0.00	2.47	0.53
Final Sat.:	0	0	0	3502	0	3344	3502	5187	0	0	4155	892
Capacity Analysis Module:												
Vol/Sat:	0.00	0.00	0.00	0.03	0.00	0.00	0.04	0.40	0.00	0.00	0.42	0.42
Crit Moves:				****			****				****	
Green/Cycle:	0.00	0.00	0.00	0.06	0.00	0.00	0.08	0.94	0.00	0.00	0.85	0.85
Volume/Cap:	0.00	0.00	0.00	0.49	0.00	0.00	0.49	0.42	0.00	0.00	0.49	0.49
Delay/Veh:	0.0	0.0	0.0	46.9	0.0	0.0	45.0	0.4	0.0	0.0	2.0	2.0
User DelAdj:	1.00	1.00	1.00	1.00	1.00	1.00	1.00	1.00	1.00	1.00	1.00	1.00
AdjDel/Veh:	0.0	0.0	0.0	46.9	0.0	0.0	45.0	0.4	0.0	0.0	2.0	2.0
LOS by Move:	A	A	A	D	A	A	D	A	A	A	A	A
HCM2kAvgQ:	0	0	0	2	0	0	3	3	0	0	7	7

Note: Queue reported is the number of cars per lane.

City of Murrieta General Plan
Future General Plan (Scenario B)
PM Peak Hour

Level Of Service Computation Report
2000 HCM Operations Method (Future Volume Alternative)

Intersection #23 Liberty Road & Clinton Keith Road

Cycle (sec): 100 | Critical Vol./Cap.(X): 0.567
Loss Time (sec): 0 (Y+R=4.0 sec) | Average Delay (sec/veh): 4.7
Optimal Cycle: 53 | Level Of Service: A

Street Name:	Liberty Road						Clinton Keith Road					
Approach:	North Bound			South Bound			East Bound			West Bound		
Movement:	L	T	R	L	T	R	L	T	R	L	T	R
Control:	Protected			Protected			Protected			Protected		
Rights:	Include			Include			Include			Include		
Min. Green:	0	0	0	0	0	0	0	0	0	0	0	0
Lanes:	2	0 0	0 1	0	0 0	0 0	0	0 2	1 0	1	0 3	0 0
Volume Module:												
Base Vol:	47	0	157	0	0	0	0	2305	86	11	2266	0
Growth Adj:	1.00	1.00	1.00	1.00	1.00	1.00	1.00	1.00	1.00	1.00	1.00	1.00
Initial Bse:	47	0	157	0	0	0	0	2305	86	11	2266	0
Added Vol:	0	0	0	0	0	0	0	0	0	0	0	0
PasserByVol:	0	0	0	0	0	0	0	0	0	0	0	0
Initial Fut:	47	0	157	0	0	0	0	2305	86	11	2266	0
User Adj:	1.00	1.00	1.00	1.00	1.00	1.00	1.00	1.00	1.00	1.00	1.00	1.00
PHF Adj:	1.00	1.00	1.00	1.00	1.00	1.00	1.00	1.00	1.00	1.00	1.00	1.00
PHF Volume:	47	0	157	0	0	0	0	2305	86	11	2266	0
Reduct Vol:	0	0	0	0	0	0	0	0	0	0	0	0
Reduced Vol:	47	0	157	0	0	0	0	2305	86	11	2266	0
PCE Adj:	1.00	1.00	1.00	1.00	1.00	1.00	1.00	1.00	1.00	1.00	1.00	1.00
MLF Adj:	1.00	1.00	1.00	1.00	1.00	1.00	1.00	1.00	1.00	1.00	1.00	1.00
FinalVolume:	47	0	157	0	0	0	0	2305	86	11	2266	0
Saturation Flow Module:												
Sat/Lane:	1900	1900	1900	1900	1900	1900	1900	1900	1900	1900	1900	1900
Adjustment:	0.92	1.00	0.85	1.00	1.00	1.00	1.00	0.91	0.91	0.95	0.91	1.00
Lanes:	2.00	0.00	1.00	0.00	0.00	0.00	0.00	2.89	0.11	1.00	3.00	0.00
Final Sat.:	3502	0	1615	0	0	0	0	4975	186	1805	5187	0
Capacity Analysis Module:												
Vol/Sat:	0.01	0.00	0.10	0.00	0.00	0.00	0.00	0.46	0.46	0.01	0.44	0.00
Crit Moves:			****					****		****		
Green/Cycle:	0.17	0.00	0.17	0.00	0.00	0.00	0.00	0.82	0.82	0.01	0.83	0.00
Volume/Cap:	0.08	0.00	0.57	0.00	0.00	0.00	0.00	0.57	0.57	0.57	0.53	0.00
Delay/Veh:	34.8	0.0	40.7	0.0	0.0	0.0	0.0	3.3	3.3	83.0	2.7	0.0
User DelAdj:	1.00	1.00	1.00	1.00	1.00	1.00	1.00	1.00	1.00	1.00	1.00	1.00
AdjDel/Veh:	34.8	0.0	40.7	0.0	0.0	0.0	0.0	3.3	3.3	83.0	2.7	0.0
LOS by Move:	C	A	D	A	A	A	A	A	A	F	A	A
HCM2kAvgQ:	1	0	5	0	0	0	0	10	10	1	8	0

Note: Queue reported is the number of cars per lane.

City of Murrieta General Plan
Future General Plan (Scenario B)
PM Peak Hour

Level Of Service Computation Report
2000 HCM Operations Method (Future Volume Alternative)

Intersection #24 Leon Road & Clinton Keith Road

Cycle (sec): 100 | Critical Vol./Cap.(X): 0.978
Loss Time (sec): 0 (Y+R=4.0 sec) | Average Delay (sec/veh): 29.2
Optimal Cycle: 180 | Level Of Service: C

Street Name:	Leon Road						Clinton Keith Road					
Approach:	North Bound			South Bound			East Bound			West Bound		
Movement:	L	T	R	L	T	R	L	T	R	L	T	R
Control:	Protected			Protected			Protected			Protected		
Rights:	Include			Ovl			Include			Include		
Min. Green:	0	0	0	0	0	0	0	0	0	0	0	0
Lanes:	0	0 0	0 0	1	0 0	0 2	2	0 3	0 0	0	0 3	0 1
Volume Module:												
Base Vol:	0	0	0	145	0	1216	539	1900	0	0	1048	888
Growth Adj:	1.00	1.00	1.00	1.00	1.00	1.00	1.00	1.00	1.00	1.00	1.00	1.00
Initial Bse:	0	0	0	145	0	1216	539	1900	0	0	1048	888
Added Vol:	0	0	0	0	0	0	0	0	0	0	0	0
PasserByVol:	0	0	0	0	0	0	0	0	0	0	0	0
Initial Fut:	0	0	0	145	0	1216	539	1900	0	0	1048	888
User Adj:	1.00	1.00	1.00	1.00	1.00	1.00	1.00	1.00	1.00	1.00	1.00	1.00
PHF Adj:	1.00	1.00	1.00	1.00	1.00	1.00	1.00	1.00	1.00	1.00	1.00	1.00
PHF Volume:	0	0	0	145	0	1216	539	1900	0	0	1048	888
Reduct Vol:	0	0	0	0	0	0	0	0	0	0	0	0
Reduced Vol:	0	0	0	145	0	1216	539	1900	0	0	1048	888
PCE Adj:	1.00	1.00	1.00	1.00	1.00	1.00	1.00	1.00	1.00	1.00	1.00	1.00
MLF Adj:	1.00	1.00	1.00	1.00	1.00	1.00	1.00	1.00	1.00	1.00	1.00	1.00
FinalVolume:	0	0	0	145	0	1216	539	1900	0	0	1048	888
Saturation Flow Module:												
Sat/Lane:	1900	1900	1900	1900	1900	1900	1900	1900	1900	1900	1900	1900
Adjustment:	1.00	1.00	1.00	0.95	1.00	0.75	0.92	0.91	1.00	1.00	0.91	0.85
Lanes:	0.00	0.00	0.00	1.00	0.00	2.00	2.00	3.00	0.00	0.00	3.00	1.00
Final Sat.:	0	0	0	1805	0	2842	3502	5187	0	0	5187	1615
Capacity Analysis Module:												
Vol/Sat:	0.00	0.00	0.00	0.08	0.00	0.43	0.15	0.37	0.00	0.00	0.20	0.55
Crit Moves:						****	****					****
Green/Cycle:	0.00	0.00	0.00	0.28	0.00	0.44	0.16	0.72	0.00	0.00	0.56	0.56
Volume/Cap:	0.00	0.00	0.00	0.29	0.00	0.98	0.98	0.51	0.00	0.00	0.36	0.98
Delay/Veh:	0.0	0.0	0.0	28.5	0.0	47.9	74.5	6.3	0.0	0.0	12.1	45.7
User DelAdj:	1.00	1.00	1.00	1.00	1.00	1.00	1.00	1.00	1.00	1.00	1.00	1.00
AdjDel/Veh:	0.0	0.0	0.0	28.5	0.0	47.9	74.5	6.3	0.0	0.0	12.1	45.7
LOS by Move:	A	A	A	C	A	D	E	A	A	A	B	D
HCM2kAvgQ:	0	0	0	4	0	27	13	10	0	0	6	33

Note: Queue reported is the number of cars per lane.

City of Murrieta General Plan
Future General Plan (Scenario B)
PM Peak Hour

Level Of Service Computation Report
2000 HCM Operations Method (Future Volume Alternative)

Intersection #25 Winchester Road - SR-79 & Benton Road

Cycle (sec): 100 | Critical Vol./Cap.(X): 1.086
Loss Time (sec): 0 (Y+R=4.0 sec) | Average Delay (sec/veh): 63.5
Optimal Cycle: 180 | Level Of Service: E

Street Name:	Winchester Road - SR-79						Benton Road					
Approach:	North Bound			South Bound			East Bound			West Bound		
Movement:	L -	T -	R	L -	T -	R	L -	T -	R	L -	T -	R
Control:	Protected			Protected			Protected			Protected		
Rights:	Include			Include			Include			Include		
Min. Green:	0	0	0	0	0	0	0	0	0	0	0	0
Lanes:	2	0	3	0	1	2	0	3	0	1	2	0	2	0	2	2	0	2	0	1
Volume Module:																				
Base Vol:	575	2536	756	65	1007	510	75	634	1450	240	749	79
Growth Adj:	1.00	1.00	1.00	1.00	1.00	1.00	1.00	1.00	1.00	1.00	1.00	1.00
Initial Bse:	575	2536	756	65	1007	510	75	634	1450	240	749	79
Added Vol:	0	0	0	0	0	0	0	0	0	0	0	0
PasserByVol:	0	0	0	0	0	0	0	0	0	0	0	0
Initial Fut:	575	2536	756	65	1007	510	75	634	1450	240	749	79
User Adj:	1.00	1.00	1.00	1.00	1.00	1.00	1.00	1.00	1.00	1.00	1.00	1.00
PHF Adj:	1.00	1.00	1.00	1.00	1.00	1.00	1.00	1.00	1.00	1.00	1.00	1.00
PHF Volume:	575	2536	756	65	1007	510	75	634	1450	240	749	79
Reduct Vol:	0	0	0	0	0	0	0	0	0	0	0	0
Reduced Vol:	575	2536	756	65	1007	510	75	634	1450	240	749	79
PCE Adj:	1.00	1.00	1.00	1.00	1.00	1.00	1.00	1.00	1.00	1.00	1.00	1.00
MLF Adj:	1.00	1.00	1.00	1.00	1.00	1.00	1.00	1.00	1.00	1.00	1.00	1.00
FinalVolume:	575	2536	756	65	1007	510	75	634	1450	240	749	79
Saturation Flow Module:												
Sat/Lane:	1900	1900	1900	1900	1900	1900	1900	1900	1900	1900	1900	1900
Adjustment:	0.92	0.91	0.85	0.92	0.91	0.85	0.92	0.95	0.75	0.92	0.95	0.85
Lanes:	2.00	3.00	1.00	2.00	3.00	1.00	2.00	2.00	2.00	2.00	2.00	1.00
Final Sat.:	3502	5187	1615	3502	5187	1615	3502	3610	2842	3502	3610	1615
Capacity Analysis Module:												
Vol/Sat:	0.16	0.49	0.47	0.02	0.19	0.32	0.02	0.18	0.51	0.07	0.21	0.05
Crit Moves:		****		****					****	****		
Green/Cycle:	0.16	0.45	0.45	0.02	0.31	0.31	0.05	0.47	0.47	0.06	0.48	0.48
Volume/Cap:	1.03	1.09	1.04	1.09	0.63	1.03	0.43	0.37	1.09	1.09	0.43	0.10
Delay/Veh:	87.2	74.3	71.7	191.3	30.6	82.2	47.8	17.2	78.1	132.2	17.0	14.1
User DelAdj:	1.00	1.00	1.00	1.00	1.00	1.00	1.00	1.00	1.00	1.00	1.00	1.00
AdjDel/Veh:	87.2	74.3	71.7	191.3	30.6	82.2	47.8	17.2	78.1	132.2	17.0	14.1
LOS by Move:	F	E	E	F	C	F	D	B	E	F	B	B
HCM2kAvgQ:	15	42	33	3	10	23	2	7	38	8	8	1

Note: Queue reported is the number of cars per lane.

City of Murrieta General Plan
Future General Plan (Scenario B)
PM Peak Hour

Level Of Service Computation Report
2000 HCM Operations Method (Future Volume Alternative)

Intersection #26 Winchester Road - SR-79 & Via Mira Mosa

Cycle (sec): 100 | Critical Vol./Cap.(X): 0.980
Loss Time (sec): 0 (Y+R=4.0 sec) | Average Delay (sec/veh): 27.3
Optimal Cycle: 180 | Level Of Service: C

Street Name:	Winchester Road - SR-79						Via Mira Mosa					
Approach:	North Bound			South Bound			East Bound			West Bound		
Movement:	L -	T -	R	L -	T -	R	L -	T -	R	L -	T -	R
Control:	Protected			Protected			Protected			Protected		
Rights:	Include			Include			Include			Include		
Min. Green:	0	0	0	0	0	0	0	0	0	0	0	0
Lanes:	1	0	2	1	0	1	0	2	1	0	1	0	0	1	0	1	0	0	1	0
Volume Module:																				
Base Vol:	65	3235	238	122	2123	370	238	31	52	223	40	135
Growth Adj:	1.00	1.00	1.00	1.00	1.00	1.00	1.00	1.00	1.00	1.00	1.00	1.00
Initial Bse:	65	3235	238	122	2123	370	238	31	52	223	40	135
Added Vol:	0	0	0	0	0	0	0	0	0	0	0	0
PasserByVol:	0	0	0	0	0	0	0	0	0	0	0	0
Initial Fut:	65	3235	238	122	2123	370	238	31	52	223	40	135
User Adj:	1.00	1.00	1.00	1.00	1.00	1.00	1.00	1.00	1.00	1.00	1.00	1.00
PHF Adj:	1.00	1.00	1.00	1.00	1.00	1.00	1.00	1.00	1.00	1.00	1.00	1.00
PHF Volume:	65	3235	238	122	2123	370	238	31	52	223	40	135
Reduct Vol:	0	0	0	0	0	0	0	0	0	0	0	0
Reduced Vol:	65	3235	238	122	2123	370	238	31	52	223	40	135
PCE Adj:	1.00	1.00	1.00	1.00	1.00	1.00	1.00	1.00	1.00	1.00	1.00	1.00
MLF Adj:	1.00	1.00	1.00	1.00	1.00	1.00	1.00	1.00	1.00	1.00	1.00	1.00
FinalVolume:	65	3235	238	122	2123	370	238	31	52	223	40	135
Saturation Flow Module:												
Sat/Lane:	1900	1900	1900	1900	1900	1900	1900	1900	1900	1900	1900	1900
Adjustment:	0.95	0.90	0.90	0.95	0.89	0.89	0.95	0.91	0.91	0.95	0.88	0.88
Lanes:	1.00	2.79	0.21	1.00	2.55	0.45	1.00	0.37	0.63	1.00	0.23	0.77
Final Sat.:	1805	4783	352	1805	4320	753	1805	643	1078	1805	384	1296
Capacity Analysis Module:												
Vol/Sat:	0.04	0.68	0.68	0.07	0.49	0.49	0.13	0.05	0.05	0.12	0.10	0.10
Crit Moves:		****		****			****				****	
Green/Cycle:	0.05	0.69	0.69	0.07	0.71	0.71	0.13	0.07	0.07	0.17	0.11	0.11
Volume/Cap:	0.69	0.98	0.98	0.98	0.69	0.69	0.98	0.71	0.71	0.71	0.98	0.98
Delay/Veh:	66.9	25.7	25.7	120.7	9.0	9.0	95.1	64.4	64.4	46.5	106	105.8
User DelAdj:	1.00	1.00	1.00	1.00	1.00	1.00	1.00	1.00	1.00	1.00	1.00	1.00
AdjDel/Veh:	66.9	25.7	25.7	120.7	9.0	9.0	95.1	64.4	64.4	46.5	106	105.8
LOS by Move:	E	C	C	F	A	A	F	E	E	D	F	F
HCM2kAvgQ:	3	45	45	7	17	17	12	4	4	8	9	9

Note: Queue reported is the number of cars per lane.

City of Murrieta General Plan
Future General Plan (Scenario B)
PM Peak Hour

Level Of Service Computation Report
2000 HCM Operations Method (Future Volume Alternative)

Intersection #27 Monroe Ave & Los Alamos

Cycle (sec): 100 Critical Vol./Cap.(X): 0.793
Loss Time (sec): 0 (Y+R=4.0 sec) Average Delay (sec/veh): 27.6
Optimal Cycle: 110 Level Of Service: C

Street Name:	Monroe Ave						Los Alamos					
Approach:	North Bound			South Bound			East Bound			West Bound		
Movement:	L -	T -	R	L -	T -	R	L -	T -	R	L -	T -	R
Control:	Protected			Protected			Protected			Protected		
Rights:	Include			Include			Include			Include		
Min. Green:	0	0	0	0	0	0	0	0	0	0	0	0
Lanes:	1 0	1	1 0	2 0	2	0 1	1 0	1	1 0	1 0	2	0 1
Volume Module:												
Base Vol:	27	457	249	250	318	64	240	1480	178	88	948	475
Growth Adj:	1.00	1.00	1.00	1.00	1.00	1.00	1.00	1.00	1.00	1.00	1.00	1.00
Initial Bse:	27	457	249	250	318	64	240	1480	178	88	948	475
Added Vol:	0	0	0	0	0	0	0	0	0	0	0	0
PasserByVol:	0	0	0	0	0	0	0	0	0	0	0	0
Initial Fut:	27	457	249	250	318	64	240	1480	178	88	948	475
User Adj:	1.00	1.00	1.00	1.00	1.00	1.00	1.00	1.00	1.00	1.00	1.00	1.00
PHF Adj:	1.00	1.00	1.00	1.00	1.00	1.00	1.00	1.00	1.00	1.00	1.00	1.00
PHF Volume:	27	457	249	250	318	64	240	1480	178	88	948	475
Reduct Vol:	0	0	0	0	0	0	0	0	0	0	0	0
Reduced Vol:	27	457	249	250	318	64	240	1480	178	88	948	475
PCE Adj:	1.00	1.00	1.00	1.00	1.00	1.00	1.00	1.00	1.00	1.00	1.00	1.00
MLF Adj:	1.00	1.00	1.00	1.00	1.00	1.00	1.00	1.00	1.00	1.00	1.00	1.00
FinalVolume:	27	457	249	250	318	64	240	1480	178	88	948	475
Saturation Flow Module:												
Sat/Lane:	1900	1900	1900	1900	1900	1900	1900	1900	1900	1900	1900	1900
Adjustment:	0.95	0.90	0.90	0.92	0.95	0.85	0.95	0.93	0.93	0.95	0.95	0.85
Lanes:	1.00	1.29	0.71	2.00	2.00	1.00	1.00	1.79	0.21	1.00	2.00	1.00
Final Sat.:	1805	2213	1206	3502	3610	1615	1805	3171	381	1805	3610	1615
Capacity Analysis Module:												
Vol/Sat:	0.01	0.21	0.21	0.07	0.09	0.04	0.13	0.47	0.47	0.05	0.26	0.29
Crit Moves:		****		****				****		****		
Green/Cycle:	0.05	0.26	0.26	0.09	0.30	0.30	0.20	0.59	0.59	0.06	0.45	0.45
Volume/Cap:	0.29	0.79	0.79	0.79	0.29	0.13	0.66	0.79	0.79	0.79	0.59	0.66
Delay/Veh:	47.5	39.4	39.4	57.5	27.1	25.7	41.0	18.1	18.1	77.6	21.3	23.8
User DelAdj:	1.00	1.00	1.00	1.00	1.00	1.00	1.00	1.00	1.00	1.00	1.00	1.00
AdjDel/Veh:	47.5	39.4	39.4	57.5	27.1	25.7	41.0	18.1	18.1	77.6	21.3	23.8
LOS by Move:	D	D	D	E	C	C	D	B	B	E	C	C
HCM2kAvgQ:	1	13	13	6	4	1	8	22	22	5	12	12

Note: Queue reported is the number of cars per lane.

City of Murrieta General Plan
Future General Plan (Scenario B)
PM Peak Hour

Level Of Service Computation Report
2000 HCM Operations Method (Future Volume Alternative)

Intersection #28 Jefferson Avenue & Murrieta Hot Springs Road

Cycle (sec): 100 Critical Vol./Cap.(X): 1.802
Loss Time (sec): 0 (Y+R=4.0 sec) Average Delay (sec/veh): 201.4
Optimal Cycle: 180 Level Of Service: F

Street Name:	Jefferson Avenue						Murrieta Hot Springs Road					
Approach:	North Bound			South Bound			East Bound			West Bound		
Movement:	L -	T -	R	L -	T -	R	L -	T -	R	L -	T -	R
Control:	Protected			Protected			Protected			Protected		
Rights:	Include			Include			Include			Include		
Min. Green:	0	0	0	0	0	0	0	0	0	0	0	0
Lanes:	1 0	3	0 1	1 0	2	1 0	1 0	2	1 0	1 0	2	1 0
Volume Module:												
Base Vol:	6	2312	1191	792	1042	69	39	196	108	594	90	903
Growth Adj:	1.00	1.00	1.00	1.00	1.00	1.00	1.00	1.00	1.00	1.00	1.00	1.00
Initial Bse:	6	2312	1191	792	1042	69	39	196	108	594	90	903
Added Vol:	0	0	0	0	0	0	0	0	0	0	0	0
PasserByVol:	0	0	0	0	0	0	0	0	0	0	0	0
Initial Fut:	6	2312	1191	792	1042	69	39	196	108	594	90	903
User Adj:	1.00	1.00	1.00	1.00	1.00	1.00	1.00	1.00	1.00	1.00	1.00	1.00
PHF Adj:	1.00	1.00	1.00	1.00	1.00	1.00	1.00	1.00	1.00	1.00	1.00	1.00
PHF Volume:	6	2312	1191	792	1042	69	39	196	108	594	90	903
Reduct Vol:	0	0	0	0	0	0	0	0	0	0	0	0
Reduced Vol:	6	2312	1191	792	1042	69	39	196	108	594	90	903
PCE Adj:	1.00	1.00	1.00	1.00	1.00	1.00	1.00	1.00	1.00	1.00	1.00	1.00
MLF Adj:	1.00	1.00	1.00	1.00	1.00	1.00	1.00	1.00	1.00	1.00	1.00	1.00
FinalVolume:	6	2312	1191	792	1042	69	39	196	108	594	90	903
Saturation Flow Module:												
Sat/Lane:	1900	1900	1900	1900	1900	1900	1900	1900	1900	1900	1900	1900
Adjustment:	0.95	0.91	0.85	0.95	0.90	0.90	0.95	0.86	0.86	0.95	0.79	0.79
Lanes:	1.00	3.00	1.00	1.00	2.81	0.19	1.00	2.00	1.00	1.00	2.00	1.00
Final Sat.:	1805	5187	1615	1805	4821	319	1805	3275	1637	1805	2988	1494
Capacity Analysis Module:												
Vol/Sat:	0.00	0.45	0.74	0.44	0.22	0.22	0.02	0.06	0.07	0.33	0.03	0.60
Crit Moves:			****	****			****					****
Green/Cycle:	0.01	0.41	0.41	0.24	0.64	0.64	0.01	0.06	0.06	0.29	0.34	0.34
Volume/Cap:	0.34	1.09	1.80	1.80	0.34	0.34	1.80	1.03	1.14	1.14	0.09	1.80
Delay/Veh:	60.0	78.3	396.6	407.9	8.2	8.2	546.2	108	144.3	118.5	22.8	401.5
User DelAdj:	1.00	1.00	1.00	1.00	1.00	1.00	1.00	1.00	1.00	1.00	1.00	1.00
AdjDel/Veh:	60.0	78.3	396.6	407.9	8.2	8.2	546.2	108	144.3	118.5	22.8	401.5
LOS by Move:	E	E	F	F	A	A	F	F	F	F	C	F
HCM2kAvgQ:	1	39	102	68	6	6	5	7	8	31	1	85

Note: Queue reported is the number of cars per lane.

City of Murrieta General Plan
Future General Plan (Scenario B)
PM Peak Hour

Level Of Service Computation Report
2000 HCM Operations Method (Future Volume Alternative)

Intersection #29 Madison Avenue & Murrieta Hot Springs Road

Cycle (sec): 100 | Critical Vol./Cap.(X): 1.413
Loss Time (sec): 0 (Y+R=4.0 sec) | Average Delay (sec/veh): 148.3
Optimal Cycle: 180 | Level Of Service: F

Street Name:	Madison Avenue						Murrieta Hot Springs Road					
Approach:	North Bound			South Bound			East Bound			West Bound		
Movement:	L	T	R	L	T	R	L	T	R	L	T	R
Control:	Protected			Protected			Protected			Protected		
Rights:	Include			Include			Include			Include		
Min. Green:	0	0	0	0	0	0	0	0	0	0	0	0
Lanes:	2	0 2	0 1	2	0 1	1 0	2	0 3	1 0	2	0 3	0 1
Volume Module:												
Base Vol:	383	646	1270	323	260	127	389	1638	338	843	1322	187
Growth Adj:	1.00	1.00	1.00	1.00	1.00	1.00	1.00	1.00	1.00	1.00	1.00	1.00
Initial Bse:	383	646	1270	323	260	127	389	1638	338	843	1322	187
Added Vol:	0	0	0	0	0	0	0	0	0	0	0	0
PasserByVol:	0	0	0	0	0	0	0	0	0	0	0	0
Initial Fut:	383	646	1270	323	260	127	389	1638	338	843	1322	187
User Adj:	1.00	1.00	1.00	1.00	1.00	1.00	1.00	1.00	1.00	1.00	1.00	1.00
PHF Adj:	1.00	1.00	1.00	1.00	1.00	1.00	1.00	1.00	1.00	1.00	1.00	1.00
PHF Volume:	383	646	1270	323	260	127	389	1638	338	843	1322	187
Reduct Vol:	0	0	0	0	0	0	0	0	0	0	0	0
Reduced Vol:	383	646	1270	323	260	127	389	1638	338	843	1322	187
PCE Adj:	1.00	1.00	1.00	1.00	1.00	1.00	1.00	1.00	1.00	1.00	1.00	1.00
MLF Adj:	1.00	1.00	1.00	1.00	1.00	1.00	1.00	1.00	1.00	1.00	1.00	1.00
FinalVolume:	383	646	1270	323	260	127	389	1638	338	843	1322	187
Saturation Flow Module:												
Sat/Lane:	1900	1900	1900	1900	1900	1900	1900	1900	1900	1900	1900	1900
Adjustment:	0.92	0.95	0.85	0.92	0.90	0.90	0.92	0.89	0.89	0.92	0.91	0.85
Lanes:	2.00	2.00	1.00	2.00	1.34	0.66	2.00	3.32	0.68	2.00	3.00	1.00
Final Sat.:	3502	3610	1615	3502	2306	1127	3502	5584	1152	3502	5187	1615
Capacity Analysis Module:												
Vol/Sat:	0.11	0.18	0.79	0.09	0.11	0.11	0.11	0.29	0.29	0.24	0.25	0.12
Crit Moves:			****	****				****		****		
Green/Cycle:	0.31	0.56	0.56	0.07	0.32	0.32	0.11	0.21	0.21	0.17	0.26	0.26
Volume/Cap:	0.36	0.32	1.41	1.41	0.36	0.36	0.97	1.41	1.41	1.41	0.97	0.44
Delay/Veh:	27.2	12.1	214.5	256.3	26.6	26.6	80.5	230	229.6	237.0	53.6	31.4
User DelAdj:	1.00	1.00	1.00	1.00	1.00	1.00	1.00	1.00	1.00	1.00	1.00	1.00
AdjDel/Veh:	27.2	12.1	214.5	256.3	26.6	26.6	80.5	230	229.6	237.0	53.6	31.4
LOS by Move:	C	B	F	F	C	C	F	F	F	F	D	C
HCM2kAvgQ:	5	6	85	13	5	5	10	38	38	31	20	5

Note: Queue reported is the number of cars per lane.

City of Murrieta General Plan
Future General Plan (Scenario B)
PM Peak Hour

Level Of Service Computation Report
2000 HCM Operations Method (Future Volume Alternative)

Intersection #30 I-15 SB Off-Ramp & Murrieta Hot Springs Road

Cycle (sec): 100 | Critical Vol./Cap.(X): 0.756
Loss Time (sec): 0 (Y+R=4.0 sec) | Average Delay (sec/veh): 14.3
Optimal Cycle: 93 | Level Of Service: B

Street Name:	I-15 SB Off-Ramp						Murrieta Hot Springs Road					
Approach:	North Bound			South Bound			East Bound			West Bound		
Movement:	L	T	R	L	T	R	L	T	R	L	T	R
Control:	Protected			Protected			Protected			Protected		
Rights:	Include			Include			Ignore			Ignore		
Min. Green:	0	0	0	0	0	0	0	0	0	0	0	0
Lanes:	0	0 0	0 0	1	0 1!	0 1	0	0 3	0 1	0	0 3	0 1
Volume Module:												
Base Vol:	0	0	0	675	0	423	0	2672	511	0	2361	112
Growth Adj:	1.00	1.00	1.00	1.00	1.00	1.00	1.00	1.00	1.00	1.00	1.00	1.00
Initial Bse:	0	0	0	675	0	423	0	2672	511	0	2361	112
Added Vol:	0	0	0	0	0	0	0	0	0	0	0	0
PasserByVol:	0	0	0	0	0	0	0	0	0	0	0	0
Initial Fut:	0	0	0	675	0	423	0	2672	511	0	2361	112
User Adj:	1.00	1.00	1.00	1.00	1.00	1.00	1.00	1.00	0.00	1.00	1.00	0.00
PHF Adj:	1.00	1.00	1.00	1.00	1.00	1.00	1.00	1.00	0.00	1.00	1.00	0.00
PHF Volume:	0	0	0	675	0	423	0	2672	0	0	2361	0
Reduct Vol:	0	0	0	0	0	0	0	0	0	0	0	0
Reduced Vol:	0	0	0	675	0	423	0	2672	0	0	2361	0
PCE Adj:	1.00	1.00	1.00	1.00	1.00	1.00	1.00	1.00	0.00	1.00	1.00	0.00
MLF Adj:	1.00	1.00	1.00	1.00	1.00	1.00	1.00	1.00	0.00	1.00	1.00	0.00
FinalVolume:	0	0	0	675	0	423	0	2672	0	0	2361	0
Saturation Flow Module:												
Sat/Lane:	1900	1900	1900	1900	1900	1900	1900	1900	1900	1900	1900	1900
Adjustment:	1.00	1.00	1.00	0.91	1.00	0.91	1.00	0.91	1.00	1.00	0.91	1.00
Lanes:	0.00	0.00	0.00	1.61	0.00	1.39	0.00	3.00	1.00	0.00	3.00	1.00
Final Sat.:	0	0	0	2803	0	2405	0	5187	1900	0	5187	1900
Capacity Analysis Module:												
Vol/Sat:	0.00	0.00	0.00	0.24	0.00	0.18	0.00	0.52	0.00	0.00	0.46	0.00
Crit Moves:				****				****		****		
Green/Cycle:	0.00	0.00	0.00	0.32	0.00	0.32	0.00	0.68	0.00	0.00	0.68	0.00
Volume/Cap:	0.00	0.00	0.00	0.76	0.00	0.55	0.00	0.76	0.00	0.00	0.67	0.00
Delay/Veh:	0.0	0.0	0.0	32.9	0.0	28.5	0.0	11.4	0.0	0.0	9.8	0.0
User DelAdj:	1.00	1.00	1.00	1.00	1.00	1.00	1.00	1.00	1.00	1.00	1.00	1.00
AdjDel/Veh:	0.0	0.0	0.0	32.9	0.0	28.5	0.0	11.4	0.0	0.0	9.8	0.0
LOS by Move:	A	A	A	C	A	C	A	B	A	A	A	A
HCM2kAvgQ:	0	0	0	13	0	8	0	21	0	0	16	0

Note: Queue reported is the number of cars per lane.

City of Murrieta General Plan
Future General Plan (Scenario B)
PM Peak Hour

Level Of Service Computation Report
2000 HCM Operations Method (Future Volume Alternative)

Intersection #31 I-15 NB Off-Ramp & Murrieta Hot Springs Road

Cycle (sec): 100 | Critical Vol./Cap.(X): 0.584
Loss Time (sec): 0 (Y+R=4.0 sec) | Average Delay (sec/veh): 7.7
Optimal Cycle: 55 | Level Of Service: A

Street Name:	I-15 NB Off-Ramp									Murrieta Hot Springs Road								
Approach:	North Bound				South Bound				East Bound				West Bound					
Movement:	L	-	T	-	R	L	-	T	-	R	L	-	T	-	R	L	-	T	-	R
Control:	Protected					Protected					Protected					Protected				
Rights:	Include					Include					Ignore					Ignore				
Min. Green:	0	0	0			0	0	0			0	0	0			0	0	0		
Lanes:	2	0	0	0	1	0	0	0	0	0	0	0	4	0	1	0	0	4	0	1
Volume Module:																				
Base Vol:	214		0		239		0		0		0	3013		363		0	1731		1644	
Growth Adj:	1.00	1.00		1.00		1.00	1.00		1.00		1.00	1.00		1.00		1.00	1.00		1.00	
Initial Bse:	214		0		239		0		0		0	3013		363		0	1731		1644	
Added Vol:	0		0		0		0		0		0	0		0		0	0		0	
PasserByVol:	0		0		0		0		0		0	0		0		0	0		0	
Initial Fut:	214		0		239		0		0		0	3013		363		0	1731		1644	
User Adj:	1.00	1.00		1.00		1.00	1.00		1.00		1.00	1.00		0.00		1.00	1.00		0.00	
PHF Adj:	1.00	1.00		1.00		1.00	1.00		1.00		1.00	1.00		0.00		1.00	1.00		0.00	
PHF Volume:	214		0		239		0		0		0	3013		0		0	1731		0	
Reduct Vol:	0		0		0		0		0		0	0		0		0	0		0	
Reduced Vol:	214		0		239		0		0		0	3013		0		0	1731		0	
PCE Adj:	1.00	1.00		1.00		1.00	1.00		1.00		1.00	1.00		0.00		1.00	1.00		0.00	
MLF Adj:	1.00	1.00		1.00		1.00	1.00		1.00		1.00	1.00		0.00		1.00	1.00		0.00	
FinalVolume:	214		0		239		0		0		0	3013		0		0	1731		0	
Saturation Flow Module:																				
Sat/Lane:	1900	1900		1900		1900	1900		1900		1900	1900		1900		1900	1900		1900	
Adjustment:	0.92	1.00		0.85		1.00	1.00		1.00		1.00	0.91		1.00		1.00	0.91		1.00	
Lanes:	2.00	0.00		1.00		0.00	0.00		0.00		0.00	4.00		1.00		0.00	4.00		1.00	
Final Sat.:	3502		0		1615		0		0		0	6916		1900		0	6916		1900	
Capacity Analysis Module:																				
Vol/Sat:	0.06	0.00		0.15		0.00	0.00		0.00		0.00	0.44		0.00		0.00	0.25		0.00	
Crit Moves:				****								****				****				
Green/Cycle:	0.25	0.00		0.25		0.00	0.00		0.00		0.00	0.75		0.00		0.00	0.75		0.00	
Volume/Cap:	0.24	0.00		0.58		0.00	0.00		0.00		0.00	0.58		0.00		0.00	0.34		0.00	
Delay/Veh:	29.8		0.0		34.9		0.0		0.0		0.0	5.9		0.0		0.0	4.3		0.0	
User DelAdj:	1.00	1.00		1.00		1.00	1.00		1.00		1.00	1.00		1.00		1.00	1.00		1.00	
AdjDel/Veh:	29.8		0.0		34.9		0.0		0.0		0.0	5.9		0.0		0.0	4.3		0.0	
LOS by Move:	C		A		C		A		A		A	A		A		A	A		A	
HCM2kAvgQ:	3		0		7		0		0		0	12		0		0	5		0	

Note: Queue reported is the number of cars per lane.

City of Murrieta General Plan
Future General Plan (Scenario B)
PM Peak Hour

Level Of Service Computation Report
2000 HCM Operations Method (Future Volume Alternative)

Intersection #32 I-215 SB Off-Ramp & Murrieta Hot Springs Road

Cycle (sec): 100 | Critical Vol./Cap.(X): 0.838
Loss Time (sec): 0 (Y+R=4.0 sec) | Average Delay (sec/veh): 10.9
Optimal Cycle: 115 | Level Of Service: B

Street Name:	I-215 SB Off-Ramp									Murrieta Hot Springs Road								
Approach:	North Bound				South Bound				East Bound				West Bound					
Movement:	L	-	T	-	R	L	-	T	-	R	L	-	T	-	R	L	-	T	-	R
Control:	Protected					Protected					Permitted					Permitted				
Rights:	Include					Include					Ignore					Ignore				
Min. Green:	0	0	0			0	0	0			0	0	0			0	0	0		
Lanes:	0	0	0	0	0	1	0	1!	0	1	0	0	3	0	1	0	0	3	0	1
Volume Module:																				
Base Vol:	0		0		0	474		0		359		0	3438		139		0	2361		238
Growth Adj:	1.00	1.00		1.00		1.00	1.00		1.00		1.00	1.00		1.00		1.00	1.00		1.00	
Initial Bse:	0		0		0	474		0		359		0	3438		139		0	2361		238
Added Vol:	0		0		0	0		0		0		0	0		0		0	0		0
PasserByVol:	0		0		0	0		0		0		0	0		0		0	0		0
Initial Fut:	0		0		0	474		0		359		0	3438		139		0	2361		238
User Adj:	1.00	1.00		1.00		1.00	1.00		1.00		1.00	1.00		0.00		1.00	1.00		0.00	
PHF Adj:	1.00	1.00		1.00		1.00	1.00		1.00		1.00	1.00		0.00		1.00	1.00		0.00	
PHF Volume:	0		0		0	474		0		359		0	3438		0		0	2361		0
Reduct Vol:	0		0		0	0		0		0		0	0		0		0	0		0
Reduced Vol:	0		0		0	474		0		359		0	3438		0		0	2361		0
PCE Adj:	1.00	1.00		1.00		1.00	1.00		1.00		1.00	1.00		0.00		1.00	1.00		0.00	
MLF Adj:	1.00	1.00		1.00		1.00	1.00		1.00		1.00	1.00		0.00		1.00	1.00		0.00	
FinalVolume:	0		0		0	474		0		359		0	3438		0		0	2361		0
Saturation Flow Module:																				
Sat/Lane:	1900	1900		1900		1900	1900		1900		1900	1900		1900		1900	1900		1900	
Adjustment:	1.00	1.00		1.00		0.91	1.00		0.91		1.00	0.91		1.00		1.00	0.91		1.00	
Lanes:	0.00	0.00		0.00		1.57	0.00		1.43		0.00	3.00		1.00		0.00	3.00		1.00	
Final Sat.:	0		0		0	2709		0		2471		0	5187		1900		0	5187		1900
Capacity Analysis Module:																				
Vol/Sat:	0.00	0.00		0.00		0.17	0.00		0.15		0.00	0.66		0.00		0.00	0.46		0.00	
Crit Moves:						****						****								
Green/Cycle:	0.00	0.00		0.00		0.21	0.00		0.21		0.00	0.79		0.00		0.00	0.79		0.00	
Volume/Cap:	0.00	0.00		0.00		0.84	0.00		0.70		0.00	0.84		0.00		0.00	0.58		0.00	
Delay/Veh:	0.0		0.0		0.0	44.3		0.0		38.4		0.0	8.1		0.0		0.0	4.2		0.0
User DelAdj:	1.00	1.00		1.00		1.00	1.00		1.00		1.00	1.00		1.00		1.00	1.00		1.00	
AdjDel/Veh:	0.0		0.0		0.0	44.3		0.0		38.4		0.0	8.1		0.0		0.0	4.2		0.0
LOS by Move:	A		A		A	D		A		D		A	A		A		A	A		A
HCM2kAvgQ:	0		0		0	12		0		8		0	26		0		0	11		0

Note: Queue reported is the number of cars per lane.

City of Murrieta General Plan
Future General Plan (Scenario B)
PM Peak Hour

Level Of Service Computation Report
2000 HCM Operations Method (Future Volume Alternative)

Intersection #33 I-215 NB Off-Ramp & Murrieta Hot Springs Road

Cycle (sec): 100 Critical Vol./Cap.(X): 0.622
Loss Time (sec): 0 (Y+R=4.0 sec) Average Delay (sec/veh): 9.4
Optimal Cycle: 49 Level Of Service: A

Street Name:	I-215 NB Off-Ramp						Murrieta Hot Springs Road					
Approach:	North Bound			South Bound			East Bound			West Bound		
Movement:	L	T	R	L	T	R	L	T	R	L	T	R
Control:	Protected			Protected			Permitted			Permitted		
Rights:	Include			Include			Ignore			Ignore		
Min. Green:	0	0	0	0	0	0	0	0	0	0	0	0
Lanes:	2 0	0	0 2	0 0	0	0 0	0 0	3	0 1	0 0	3	0 1
Volume Module:												
Base Vol:	85	0	463	0	0	0	0	2333	104	0	2380	1413
Growth Adj:	1.00	1.00	1.00	1.00	1.00	1.00	1.00	1.00	1.00	1.00	1.00	1.00
Initial Bse:	85	0	463	0	0	0	0	2333	104	0	2380	1413
Added Vol:	0	0	0	0	0	0	0	0	0	0	0	0
PasserByVol:	0	0	0	0	0	0	0	0	0	0	0	0
Initial Fut:	85	0	463	0	0	0	0	2333	104	0	2380	1413
User Adj:	1.00	1.00	1.00	1.00	1.00	1.00	1.00	1.00	0.00	1.00	1.00	0.00
PHF Adj:	1.00	1.00	1.00	1.00	1.00	1.00	1.00	1.00	0.00	1.00	1.00	0.00
PHF Volume:	85	0	463	0	0	0	0	2333	0	0	2380	0
Reduct Vol:	0	0	0	0	0	0	0	0	0	0	0	0
Reduced Vol:	85	0	463	0	0	0	0	2333	0	0	2380	0
PCE Adj:	1.00	1.00	1.00	1.00	1.00	1.00	1.00	1.00	0.00	1.00	1.00	0.00
MLF Adj:	1.00	1.00	1.00	1.00	1.00	1.00	1.00	1.00	0.00	1.00	1.00	0.00
FinalVolume:	85	0	463	0	0	0	0	2333	0	0	2380	0
Saturation Flow Module:												
Sat/Lane:	1900	1900	1900	1900	1900	1900	1900	1900	1900	1900	1900	1900
Adjustment:	0.92	1.00	0.75	1.00	1.00	1.00	1.00	0.91	1.00	1.00	0.91	1.00
Lanes:	2.00	0.00	2.00	0.00	0.00	0.00	0.00	3.00	1.00	0.00	3.00	1.00
Final Sat.:	3502	0	2842	0	0	0	0	5187	1900	0	5187	1900
Capacity Analysis Module:												
Vol/Sat:	0.02	0.00	0.16	0.00	0.00	0.00	0.00	0.45	0.00	0.00	0.46	0.00
Crit Moves:			****								****	
Green/Cycle:	0.26	0.00	0.26	0.00	0.00	0.00	0.00	0.74	0.00	0.00	0.74	0.00
Volume/Cap:	0.09	0.00	0.62	0.00	0.00	0.00	0.00	0.61	0.00	0.00	0.62	0.00
Delay/Veh:	28.0	0.0	34.2	0.0	0.0	0.0	0.0	6.5	0.0	0.0	6.7	0.0
User DelAdj:	1.00	1.00	1.00	1.00	1.00	1.00	1.00	1.00	1.00	1.00	1.00	1.00
AdjDel/Veh:	28.0	0.0	34.2	0.0	0.0	0.0	0.0	6.5	0.0	0.0	6.7	0.0
LOS by Move:	C	A	C	A	A	A	A	A	A	A	A	A
HCM2kAvgQ:	1	0	8	0	0	0	0	13	0	0	13	0

Note: Queue reported is the number of cars per lane.

City of Murrieta General Plan
Future General Plan (Scenario B)
PM Peak Hour

Level Of Service Computation Report
2000 HCM Operations Method (Future Volume Alternative)

Intersection #34 Jackson Avenue & Murrieta Hot Springs Road

Cycle (sec): 100 Critical Vol./Cap.(X): 0.558
Loss Time (sec): 0 (Y+R=4.0 sec) Average Delay (sec/veh): 8.5
Optimal Cycle: 52 Level Of Service: A

Street Name:	Jackson Avenue						Murrieta Hot Springs Road					
Approach:	North Bound			South Bound			East Bound			West Bound		
Movement:	L	T	R	L	T	R	L	T	R	L	T	R
Control:	Protected			Protected			Protected			Protected		
Rights:	Include			Include			Include			Include		
Min. Green:	0	0	0	0	0	0	0	0	0	0	0	0
Lanes:	2 0	0	0 2	0 0	0	0 0	0	3	0 1	1 0	3	0 0
Volume Module:												
Base Vol:	202	0	169	0	0	0	0	1910	58	211	2597	0
Growth Adj:	1.00	1.00	1.00	1.00	1.00	1.00	1.00	1.00	1.00	1.00	1.00	1.00
Initial Bse:	202	0	169	0	0	0	0	1910	58	211	2597	0
Added Vol:	0	0	0	0	0	0	0	0	0	0	0	0
PasserByVol:	0	0	0	0	0	0	0	0	0	0	0	0
Initial Fut:	202	0	169	0	0	0	0	1910	58	211	2597	0
User Adj:	1.00	1.00	1.00	1.00	1.00	1.00	1.00	1.00	1.00	1.00	1.00	1.00
PHF Adj:	1.00	1.00	1.00	1.00	1.00	1.00	1.00	1.00	1.00	1.00	1.00	1.00
PHF Volume:	202	0	169	0	0	0	0	1910	58	211	2597	0
Reduct Vol:	0	0	0	0	0	0	0	0	0	0	0	0
Reduced Vol:	202	0	169	0	0	0	0	1910	58	211	2597	0
PCE Adj:	1.00	1.00	1.00	1.00	1.00	1.00	1.00	1.00	1.00	1.00	1.00	1.00
MLF Adj:	1.00	1.00	1.00	1.00	1.00	1.00	1.00	1.00	1.00	1.00	1.00	1.00
FinalVolume:	202	0	169	0	0	0	0	1910	58	211	2597	0
Saturation Flow Module:												
Sat/Lane:	1900	1900	1900	1900	1900	1900	1900	1900	1900	1900	1900	1900
Adjustment:	0.92	1.00	0.75	1.00	1.00	1.00	1.00	0.91	0.85	0.95	0.91	1.00
Lanes:	2.00	0.00	2.00	0.00	0.00	0.00	0.00	3.00	1.00	1.00	3.00	0.00
Final Sat.:	3502	0	2842	0	0	0	0	5187	1615	1805	5187	0
Capacity Analysis Module:												
Vol/Sat:	0.06	0.00	0.06	0.00	0.00	0.00	0.00	0.37	0.04	0.12	0.50	0.00
Crit Moves:	****						****				****	
Green/Cycle:	0.10	0.00	0.10	0.00	0.00	0.00	0.00	0.68	0.68	0.22	0.90	0.00
Volume/Cap:	0.56	0.00	0.58	0.00	0.00	0.00	0.00	0.54	0.05	0.54	0.56	0.00
Delay/Veh:	44.6	0.0	45.5	0.0	0.0	0.0	0.0	8.2	5.3	36.3	1.2	0.0
User DelAdj:	1.00	1.00	1.00	1.00	1.00	1.00	1.00	1.00	1.00	1.00	1.00	1.00
AdjDel/Veh:	44.6	0.0	45.5	0.0	0.0	0.0	0.0	8.2	5.3	36.3	1.2	0.0
LOS by Move:	D	A	D	A	A	A	A	A	A	D	A	A
HCM2kAvgQ:	4	0	4	0	0	0	0	11	1	6	7	0

Note: Queue reported is the number of cars per lane.

City of Murrieta General Plan
Future General Plan (Scenario B)
PM Peak Hour

Level Of Service Computation Report
2000 HCM Operations Method (Future Volume Alternative)

Intersection #35 Margarita Road & Murrieta Hot Springs Road

Cycle (sec): 100 | Critical Vol./Cap.(X): 1.023
Loss Time (sec): 0 (Y+R=4.0 sec) | Average Delay (sec/veh): 50.2
Optimal Cycle: 180 | Level Of Service: D

Street Name:	Margarita Road						Murrieta Hot Springs Road					
Approach:	North Bound			South Bound			East Bound			West Bound		
Movement:	L	T	R	L	T	R	L	T	R	L	T	R
Control:	Split Phase			Split Phase			Protected			Protected		
Rights:	Include			Include			Include			Include		
Min. Green:	0	0	0	0	0	0	0	0	0	0	0	0
Lanes:	2	0 1	0 1	0	1 0	0 1	1	0 2	1 0	1	0 2	1 0
Volume Module:												
Base Vol:	949	70	388	187	77	152	51	1745	535	276	1634	38
Growth Adj:	1.00	1.00	1.00	1.00	1.00	1.00	1.00	1.00	1.00	1.00	1.00	1.00
Initial Bse:	949	70	388	187	77	152	51	1745	535	276	1634	38
Added Vol:	0	0	0	0	0	0	0	0	0	0	0	0
PasserByVol:	0	0	0	0	0	0	0	0	0	0	0	0
Initial Fut:	949	70	388	187	77	152	51	1745	535	276	1634	38
User Adj:	1.00	1.00	1.00	1.00	1.00	1.00	1.00	1.00	1.00	1.00	1.00	1.00
PHF Adj:	1.00	1.00	1.00	1.00	1.00	1.00	1.00	1.00	1.00	1.00	1.00	1.00
PHF Volume:	949	70	388	187	77	152	51	1745	535	276	1634	38
Reduct Vol:	0	0	0	0	0	0	0	0	0	0	0	0
Reduced Vol:	949	70	388	187	77	152	51	1745	535	276	1634	38
PCE Adj:	1.00	1.00	1.00	1.00	1.00	1.00	1.00	1.00	1.00	1.00	1.00	1.00
MLF Adj:	1.00	1.00	1.00	1.00	1.00	1.00	1.00	1.00	1.00	1.00	1.00	1.00
FinalVolume:	949	70	388	187	77	152	51	1745	535	276	1634	38
Saturation Flow Module:												
Sat/Lane:	1900	1900	1900	1900	1900	1900	1900	1900	1900	1900	1900	1900
Adjustment:	0.92	1.00	0.85	0.97	0.97	0.85	0.95	0.88	0.88	0.95	0.91	0.91
Lanes:	2.00	1.00	1.00	0.71	0.29	1.00	1.00	2.30	0.70	1.00	2.93	0.07
Final Sat.:	3502	1900	1615	1300	535	1615	1805	3831	1175	1805	5054	118
Capacity Analysis Module:												
Vol/Sat:	0.27	0.04	0.24	0.14	0.14	0.09	0.03	0.46	0.46	0.15	0.32	0.32
Crit Moves:	****				****			****		****		
Green/Cycle:	0.26	0.26	0.26	0.14	0.14	0.14	0.05	0.45	0.45	0.15	0.55	0.55
Volume/Cap:	1.02	0.14	0.91	1.02	1.02	0.67	0.59	1.02	1.02	1.02	0.59	0.59
Delay/Veh:	72.3	28.2	58.2	105.1	105	48.3	57.1	53.0	53.0	103.4	15.5	15.5
User DelAdj:	1.00	1.00	1.00	1.00	1.00	1.00	1.00	1.00	1.00	1.00	1.00	1.00
AdjDel/Veh:	72.3	28.2	58.2	105.1	105	48.3	57.1	53.0	53.0	103.4	15.5	15.5
LOS by Move:	E	C	E	F	F	D	E	D	D	F	B	B
HCM2kAvgQ:	22	2	15	13	13	6	3	35	35	14	13	13

Note: Queue reported is the number of cars per lane.

City of Murrieta General Plan
Future General Plan (Scenario B)
PM Peak Hour

Level Of Service Computation Report
2000 HCM Operations Method (Future Volume Alternative)

Intersection #36 French Valley Parkway & Murrieta Hot Springs Road

Cycle (sec): 100 | Critical Vol./Cap.(X): 0.810
Loss Time (sec): 0 (Y+R=4.0 sec) | Average Delay (sec/veh): 18.0
Optimal Cycle: 120 | Level Of Service: B

Street Name:	French Valley Parkway						Murrieta Hot Springs Road					
Approach:	North Bound			South Bound			East Bound			West Bound		
Movement:	L	T	R	L	T	R	L	T	R	L	T	R
Control:	Protected			Protected			Protected			Protected		
Rights:	Ovl			Include			Include			Include		
Min. Green:	0	0	0	0	0	0	0	0	0	0	0	0
Lanes:	1	0 0	0 2	0	0 0	0 0	0	0 2	1 0	1	0 3	0 0
Volume Module:												
Base Vol:	34	0	1093	0	0	0	0	1789	362	445	1723	0
Growth Adj:	1.00	1.00	1.00	1.00	1.00	1.00	1.00	1.00	1.00	1.00	1.00	1.00
Initial Bse:	34	0	1093	0	0	0	0	1789	362	445	1723	0
Added Vol:	0	0	0	0	0	0	0	0	0	0	0	0
PasserByVol:	0	0	0	0	0	0	0	0	0	0	0	0
Initial Fut:	34	0	1093	0	0	0	0	1789	362	445	1723	0
User Adj:	1.00	1.00	1.00	1.00	1.00	1.00	1.00	1.00	1.00	1.00	1.00	1.00
PHF Adj:	1.00	1.00	1.00	1.00	1.00	1.00	1.00	1.00	1.00	1.00	1.00	1.00
PHF Volume:	34	0	1093	0	0	0	0	1789	362	445	1723	0
Reduct Vol:	0	0	0	0	0	0	0	0	0	0	0	0
Reduced Vol:	34	0	1093	0	0	0	0	1789	362	445	1723	0
PCE Adj:	1.00	1.00	1.00	1.00	1.00	1.00	1.00	1.00	1.00	1.00	1.00	1.00
MLF Adj:	1.00	1.00	1.00	1.00	1.00	1.00	1.00	1.00	1.00	1.00	1.00	1.00
FinalVolume:	34	0	1093	0	0	0	0	1789	362	445	1723	0
Saturation Flow Module:												
Sat/Lane:	1900	1900	1900	1900	1900	1900	1900	1900	1900	1900	1900	1900
Adjustment:	0.95	1.00	0.75	1.00	1.00	1.00	1.00	0.89	0.89	0.95	0.91	1.00
Lanes:	1.00	0.00	2.00	0.00	0.00	0.00	0.00	2.50	0.50	1.00	3.00	0.00
Final Sat.:	1805	0	2842	0	0	0	0	4206	851	1805	5187	0
Capacity Analysis Module:												
Vol/Sat:	0.02	0.00	0.38	0.00	0.00	0.00	0.00	0.43	0.43	0.25	0.33	0.00
Crit Moves:			****					****		****		
Green/Cycle:	0.17	0.00	0.47	0.00	0.00	0.00	0.00	0.53	0.53	0.30	0.83	0.00
Volume/Cap:	0.11	0.00	0.81	0.00	0.00	0.00	0.00	0.81	0.81	0.81	0.40	0.00
Delay/Veh:	35.2	0.0	26.2	0.0	0.0	0.0	0.0	21.6	21.6	40.9	2.2	0.0
User DelAdj:	1.00	1.00	1.00	1.00	1.00	1.00	1.00	1.00	1.00	1.00	1.00	1.00
AdjDel/Veh:	35.2	0.0	26.2	0.0	0.0	0.0	0.0	21.6	21.6	40.9	2.2	0.0
LOS by Move:	D	A	C	A	A	A	A	C	C	D	A	A
HCM2kAvgQ:	1	0	18	0	0	0	0	22	22	15	5	0

Note: Queue reported is the number of cars per lane.

City of Murrieta General Plan
Future General Plan (Scenario B)
PM Peak Hour

Level Of Service Computation Report
2000 HCM Operations Method (Future Volume Alternative)

Intersection #37 Jefferson Avenue & Guava Street

Cycle (sec): 100 Critical Vol./Cap.(X): 0.795
Loss Time (sec): 0 (Y+R=4.0 sec) Average Delay (sec/veh): 9.1
Optimal Cycle: 91 Level Of Service: A

Street Name:	Jefferson Avenue						Guava Street					
Approach:	North Bound			South Bound			East Bound			West Bound		
Movement:	L - T - R			L - T - R			L - T - R			L - T - R		
Control:	Protected			Protected			Permitted			Permitted		
Rights:	Include			Include			Include			Include		
Min. Green:	0	0	0	0	0	0	0	0	0	0	0	0
Lanes:	1 0	2 1	0	1 0	2 1	0	1 0	0 1	0	1 0	1 1	0
Volume Module:												
Base Vol:	15	3304	21	20	1223	332	80	134	117	2	77	16
Growth Adj:	1.00	1.00	1.00	1.00	1.00	1.00	1.00	1.00	1.00	1.00	1.00	1.00
Initial Bse:	15	3304	21	20	1223	332	80	134	117	2	77	16
Added Vol:	0	0	0	0	0	0	0	0	0	0	0	0
PasserByVol:	0	0	0	0	0	0	0	0	0	0	0	0
Initial Fut:	15	3304	21	20	1223	332	80	134	117	2	77	16
User Adj:	1.00	1.00	1.00	1.00	1.00	1.00	1.00	1.00	1.00	1.00	1.00	1.00
PHF Adj:	1.00	1.00	1.00	1.00	1.00	1.00	1.00	1.00	1.00	1.00	1.00	1.00
PHF Volume:	15	3304	21	20	1223	332	80	134	117	2	77	16
Reduct Vol:	0	0	0	0	0	0	0	0	0	0	0	0
Reduced Vol:	15	3304	21	20	1223	332	80	134	117	2	77	16
PCE Adj:	1.00	1.00	1.00	1.00	1.00	1.00	1.00	1.00	1.00	1.00	1.00	1.00
MLF Adj:	1.00	1.00	1.00	1.00	1.00	1.00	1.00	1.00	1.00	1.00	1.00	1.00
FinalVolume:	15	3304	21	20	1223	332	80	134	117	2	77	16
Saturation Flow Module:												
Sat/Lane:	1900	1900	1900	1900	1900	1900	1900	1900	1900	1900	1900	1900
Adjustment:	0.95	0.91	0.91	0.95	0.88	0.88	0.61	0.93	0.93	0.22	0.93	0.93
Lanes:	1.00	2.98	0.02	1.00	2.36	0.64	1.00	0.53	0.47	1.00	1.66	0.34
Final Sat.:	1805	5149	33	1805	3949	1072	1159	943	824	426	2911	605
Capacity Analysis Module:												
Vol/Sat:	0.01	0.64	0.64	0.01	0.31	0.31	0.07	0.14	0.14	0.00	0.03	0.03
Crit Moves:		****		****				****				
Green/Cycle:	0.02	0.81	0.81	0.01	0.80	0.80	0.18	0.18	0.18	0.18	0.18	0.18
Volume/Cap:	0.39	0.79	0.79	0.79	0.39	0.39	0.39	0.79	0.79	0.03	0.15	0.15
Delay/Veh:	54.6	6.3	6.3	142.1	3.0	3.0	37.4	52.3	52.3	34.0	34.8	34.8
User DelAdj:	1.00	1.00	1.00	1.00	1.00	1.00	1.00	1.00	1.00	1.00	1.00	1.00
AdjDel/Veh:	54.6	6.3	6.3	142.1	3.0	3.0	37.4	52.3	52.3	34.0	34.8	34.8
LOS by Move:	D	A	A	F	A	A	D	D	D	C	C	C
HCM2kAvgQ:	1	22	22	2	5	5	3	10	10	0	1	1

Note: Queue reported is the number of cars per lane.

City of Murrieta General Plan
Future General Plan (Scenario B)
PM Peak Hour

Level Of Service Computation Report
2000 HCM Operations Method (Future Volume Alternative)

Intersection #39 Washington Ave & Calle Del Oso Oro/Nutmeg

Cycle (sec): 100 Critical Vol./Cap.(X): 0.535
Loss Time (sec): 0 (Y+R=4.0 sec) Average Delay (sec/veh): 27.3
Optimal Cycle: 49 Level Of Service: C

Street Name:	Washington Ave						Calle Del Oso Oro/Nutmeg					
Approach:	North Bound			South Bound			East Bound			West Bound		
Movement:	L - T - R			L - T - R			L - T - R			L - T - R		
Control:	Protected			Protected			Protected			Protected		
Rights:	Include			Include			Include			Include		
Min. Green:	0	0	0	0	0	0	0	0	0	0	0	0
Lanes:	1 0	2 1	0	1 0	2 1	0	1 0	1 1	0	1 0	1 1	0
Volume Module:												
Base Vol:	395	266	126	93	235	55	26	212	281	160	621	148
Growth Adj:	1.00	1.00	1.00	1.00	1.00	1.00	1.00	1.00	1.00	1.00	1.00	1.00
Initial Bse:	395	266	126	93	235	55	26	212	281	160	621	148
Added Vol:	0	0	0	0	0	0	0	0	0	0	0	0
PasserByVol:	0	0	0	0	0	0	0	0	0	0	0	0
Initial Fut:	395	266	126	93	235	55	26	212	281	160	621	148
User Adj:	1.00	1.00	1.00	1.00	1.00	1.00	1.00	1.00	1.00	1.00	1.00	1.00
PHF Adj:	1.00	1.00	1.00	1.00	1.00	1.00	1.00	1.00	1.00	1.00	1.00	1.00
PHF Volume:	395	266	126	93	235	55	26	212	281	160	621	148
Reduct Vol:	0	0	0	0	0	0	0	0	0	0	0	0
Reduced Vol:	395	266	126	93	235	55	26	212	281	160	621	148
PCE Adj:	1.00	1.00	1.00	1.00	1.00	1.00	1.00	1.00	1.00	1.00	1.00	1.00
MLF Adj:	1.00	1.00	1.00	1.00	1.00	1.00	1.00	1.00	1.00	1.00	1.00	1.00
FinalVolume:	395	266	126	93	235	55	26	212	281	160	621	148
Saturation Flow Module:												
Sat/Lane:	1900	1900	1900	1900	1900	1900	1900	1900	1900	1900	1900	1900
Adjustment:	0.95	0.87	0.87	0.95	0.88	0.88	0.95	0.87	0.87	0.95	0.92	0.92
Lanes:	1.00	2.04	0.96	1.00	2.43	0.57	1.00	1.00	1.00	1.00	1.62	0.38
Final Sat.:	1805	3351	1587	1805	4086	956	1805	1652	1652	1805	2831	675
Capacity Analysis Module:												
Vol/Sat:	0.22	0.08	0.08	0.05	0.06	0.06	0.01	0.13	0.17	0.09	0.22	0.22
Crit Moves:	****				****				****	****		
Green/Cycle:	0.41	0.31	0.31	0.20	0.11	0.11	0.03	0.32	0.32	0.17	0.45	0.45
Volume/Cap:	0.54	0.25	0.25	0.25	0.54	0.54	0.48	0.40	0.54	0.54	0.48	0.48
Delay/Veh:	23.1	25.7	25.7	33.8	43.3	43.3	54.5	26.9	28.6	40.1	19.3	19.3
User DelAdj:	1.00	1.00	1.00	1.00	1.00	1.00	1.00	1.00	1.00	1.00	1.00	1.00
AdjDel/Veh:	23.1	25.7	25.7	33.8	43.3	43.3	54.5	26.9	28.6	40.1	19.3	19.3
LOS by Move:	C	C	C	C	D	D	D	C	C	D	B	B
HCM2kAvgQ:	9	3	3	3	4	4	1	6	8	5	9	9

Note: Queue reported is the number of cars per lane.

City of Murrieta General Plan
Future General Plan (Scenario B)
PM Peak Hour

Level Of Service Computation Report
2000 HCM Operations Method (Future Volume Alternative)

Intersection #40 Clinton Keith Rd & Calle de Oso Oro/Bear Creek Dr

Cycle (sec): 100 | Critical Vol./Cap.(X): 0.655
Loss Time (sec): 0 (Y+R=4.0 sec) | Average Delay (sec/veh): 16.4
Optimal Cycle: 54 | Level Of Service: B

Street Name:	Clinton Keith Rd						Calle de Oso Oro/Bear Creek Dr					
Approach:	North Bound			South Bound			East Bound			West Bound		
Movement:	L	T	R	L	T	R	L	T	R	L	T	R
Control:	Protected			Protected			Permitted			Permitted		
Rights:	Include			Include			Include			Include		
Min. Green:	0	0	0	0	0	0	0	0	0	0	0	0
Lanes:	1	0	1	1	0	1	0	1	1	0	1	0	0	1	0	1	1	0
Volume Module:												
Base Vol:	77	177	207	17	90	271	188	528	140	228	753	10
Growth Adj:	1.00	1.00	1.00	1.00	1.00	1.00	1.00	1.00	1.00	1.00	1.00	1.00
Initial Bse:	77	177	207	17	90	271	188	528	140	228	753	10
Added Vol:	0	0	0	0	0	0	0	0	0	0	0	0
PasserByVol:	0	0	0	0	0	0	0	0	0	0	0	0
Initial Fut:	77	177	207	17	90	271	188	528	140	228	753	10
User Adj:	1.00	1.00	1.00	1.00	1.00	1.00	1.00	1.00	1.00	1.00	1.00	1.00
PHF Adj:	1.00	1.00	1.00	1.00	1.00	1.00	1.00	1.00	1.00	1.00	1.00	1.00
PHF Volume:	77	177	207	17	90	271	188	528	140	228	753	10
Reduct Vol:	0	0	0	0	0	0	0	0	0	0	0	0
Reduced Vol:	77	177	207	17	90	271	188	528	140	228	753	10
PCE Adj:	1.00	1.00	1.00	1.00	1.00	1.00	1.00	1.00	1.00	1.00	1.00	1.00
MLF Adj:	1.00	1.00	1.00	1.00	1.00	1.00	1.00	1.00	1.00	1.00	1.00	1.00
FinalVolume:	77	177	207	17	90	271	188	528	140	228	753	10
Saturation Flow Module:												
Sat/Lane:	1900	1900	1900	1900	1900	1900	1900	1900	1900	1900	1900	1900
Adjustment:	0.95	0.87	0.87	0.95	0.84	0.84	0.32	0.97	0.97	0.27	0.95	0.95
Lanes:	1.00	1.00	1.00	1.00	1.00	1.00	1.00	0.79	0.21	1.00	1.97	0.03
Final Sat.:	1805	1659	1659	1805	1601	1601	612	1455	386	515	3556	47
Capacity Analysis Module:												
Vol/Sat:	0.04	0.11	0.12	0.01	0.06	0.17	0.31	0.36	0.36	0.44	0.21	0.21
Crit Moves:	****					****				****		
Green/Cycle:	0.07	0.30	0.30	0.02	0.26	0.26	0.68	0.68	0.68	0.68	0.68	0.68
Volume/Cap:	0.65	0.35	0.41	0.41	0.22	0.65	0.45	0.54	0.54	0.65	0.31	0.31
Delay/Veh:	58.2	27.6	28.2	54.9	29.2	35.9	8.4	8.7	8.7	13.9	6.7	6.7
User DelAdj:	1.00	1.00	1.00	1.00	1.00	1.00	1.00	1.00	1.00	1.00	1.00	1.00
AdjDel/Veh:	58.2	27.6	28.2	54.9	29.2	35.9	8.4	8.7	8.7	13.9	6.7	6.7
LOS by Move:	E	C	C	D	C	D	A	A	A	B	A	A
HCM2kAvgQ:	4	5	6	1	2	9	3	11	11	5	5	5

Note: Queue reported is the number of cars per lane.

City of Murrieta General Plan
Future General Plan (Scenario B)
PM Peak Hour

Level Of Service Computation Report
2000 HCM Operations Method (Future Volume Alternative)

Intersection #43 Jefferson Ave & Lemon St

Cycle (sec): 100 | Critical Vol./Cap.(X): 0.718
Loss Time (sec): 0 (Y+R=4.0 sec) | Average Delay (sec/veh): 17.8
Optimal Cycle: 81 | Level Of Service: B

Street Name:	Jefferson Ave						Lemon St					
Approach:	North Bound			South Bound			East Bound			West Bound		
Movement:	L	T	R	L	T	R	L	T	R	L	T	R
Control:	Protected			Protected			Protected			Protected		
Rights:	Include			Include			Include			Include		
Min. Green:	0	0	0	0	0	0	0	0	0	0	0	0
Lanes:	1	0	2	1	0	1	0	2	1	0	1	0	1	0	1	0	0	1	0
Volume Module:												
Base Vol:	424	2136	2	6	1607	40	41	38	251	16	21	14
Growth Adj:	1.00	1.00	1.00	1.00	1.00	1.00	1.00	1.00	1.00	1.00	1.00	1.00
Initial Bse:	424	2136	2	6	1607	40	41	38	251	16	21	14
Added Vol:	0	0	0	0	0	0	0	0	0	0	0	0
PasserByVol:	0	0	0	0	0	0	0	0	0	0	0	0
Initial Fut:	424	2136	2	6	1607	40	41	38	251	16	21	14
User Adj:	1.00	1.00	1.00	1.00	1.00	1.00	1.00	1.00	1.00	1.00	1.00	1.00
PHF Adj:	1.00	1.00	1.00	1.00	1.00	1.00	1.00	1.00	1.00	1.00	1.00	1.00
PHF Volume:	424	2136	2	6	1607	40	41	38	251	16	21	14
Reduct Vol:	0	0	0	0	0	0	0	0	0	0	0	0
Reduced Vol:	424	2136	2	6	1607	40	41	38	251	16	21	14
PCE Adj:	1.00	1.00	1.00	1.00	1.00	1.00	1.00	1.00	1.00	1.00	1.00	1.00
MLF Adj:	1.00	1.00	1.00	1.00	1.00	1.00	1.00	1.00	1.00	1.00	1.00	1.00
FinalVolume:	424	2136	2	6	1607	40	41	38	251	16	21	14
Saturation Flow Module:												
Sat/Lane:	1900	1900	1900	1900	1900	1900	1900	1900	1900	1900	1900	1900
Adjustment:	0.95	0.91	0.91	0.95	0.91	0.91	0.95	1.00	0.85	0.95	0.94	0.94
Lanes:	1.00	2.99	0.01	1.00	2.93	0.07	1.00	1.00	1.00	1.00	0.60	0.40
Final Sat.:	1805	5182	5	1805	5041	125	1805	1900	1615	1805	1072	714
Capacity Analysis Module:												
Vol/Sat:	0.23	0.41	0.41	0.00	0.32	0.32	0.02	0.02	0.16	0.01	0.02	0.02
Crit Moves:	****				****				****	****		
Green/Cycle:	0.33	0.77	0.77	0.01	0.44	0.44	0.12	0.22	0.22	0.01	0.11	0.11
Volume/Cap:	0.72	0.54	0.54	0.54	0.72	0.72	0.18	0.09	0.72	0.72	0.18	0.18
Delay/Veh:	33.8	4.8	4.8	93.5	23.8	23.8	39.8	31.4	43.4	122.8	41.2	41.2
User DelAdj:	1.00	1.00	1.00	1.00	1.00	1.00	1.00	1.00	1.00	1.00	1.00	1.00
AdjDel/Veh:	33.8	4.8	4.8	93.5	23.8	23.8	39.8	31.4	43.4	122.8	41.2	41.2
LOS by Move:	C	A	A	F	C	C	D	C	D	F	D	D
HCM2kAvgQ:	13	10	10	1	16	16	1	1	9	2	1	1

Note: Queue reported is the number of cars per lane.

City of Murrieta General Plan
Future General Plan (Scenario B)
PM Peak Hour

Level Of Service Computation Report
2000 HCM Operations Method (Future Volume Alternative)

Intersection #44 Jefferson Ave & Kalmia St

Cycle (sec): 100 | Critical Vol./Cap.(X): 1.669
Loss Time (sec): 0 (Y+R=4.0 sec) | Average Delay (sec/veh): 158.6
Optimal Cycle: 180 | Level Of Service: F

Street Name:	Jefferson Ave						Kalmia St					
Approach:	North Bound			South Bound			East Bound			West Bound		
Movement:	L -	T -	R	L -	T -	R	L -	T -	R	L -	T -	R
Control:	Protected			Protected			Protected			Protected		
Rights:	Include			Include			Include			Include		
Min. Green:	0	0	0	0	0	0	0	0	0	0	0	0
Lanes:	2 0	3 0	1	1 0	2 1	0	1 0	2 1	0	1 0	1 1	0
Volume Module:												
Base Vol:	391	1782	1026	905	1210	28	29	604	281	353	486	844
Growth Adj:	1.00	1.00	1.00	1.00	1.00	1.00	1.00	1.00	1.00	1.00	1.00	1.00
Initial Bse:	391	1782	1026	905	1210	28	29	604	281	353	486	844
Added Vol:	0	0	0	0	0	0	0	0	0	0	0	0
PasserByVol:	0	0	0	0	0	0	0	0	0	0	0	0
Initial Fut:	391	1782	1026	905	1210	28	29	604	281	353	486	844
User Adj:	1.00	1.00	1.00	1.00	1.00	1.00	1.00	1.00	1.00	1.00	1.00	1.00
PHF Adj:	1.00	1.00	1.00	1.00	1.00	1.00	1.00	1.00	1.00	1.00	1.00	1.00
PHF Volume:	391	1782	1026	905	1210	28	29	604	281	353	486	844
Reduct Vol:	0	0	0	0	0	0	0	0	0	0	0	0
Reduced Vol:	391	1782	1026	905	1210	28	29	604	281	353	486	844
PCE Adj:	1.00	1.00	1.00	1.00	1.00	1.00	1.00	1.00	1.00	1.00	1.00	1.00
MLF Adj:	1.00	1.00	1.00	1.00	1.00	1.00	1.00	1.00	1.00	1.00	1.00	1.00
FinalVolume:	391	1782	1026	905	1210	28	29	604	281	353	486	844
Saturation Flow Module:												
Sat/Lane:	1900	1900	1900	1900	1900	1900	1900	1900	1900	1900	1900	1900
Adjustment:	0.92	0.91	0.85	0.95	0.91	0.91	0.95	0.87	0.87	0.95	0.86	0.86
Lanes:	2.00	3.00	1.00	1.00	2.93	0.07	1.00	2.05	0.95	1.00	1.00	1.00
Final Sat.:	3502	5187	1615	1805	5054	117	1805	3370	1568	1805	1634	1634
Capacity Analysis Module:												
Vol/Sat:	0.11	0.34	0.64	0.50	0.24	0.24	0.02	0.18	0.18	0.20	0.30	0.52
Crit Moves:			****	****			****					****
Green/Cycle:	0.22	0.38	0.38	0.30	0.46	0.46	0.01	0.15	0.15	0.17	0.31	0.31
Volume/Cap:	0.52	0.90	1.67	1.67	0.52	0.52	1.67	1.17	1.17	1.17	0.96	1.67
Delay/Veh:	35.2	35.5	339.3	344.3	19.1	19.1	517.2	135	134.6	149.5	49.8	341.3
User DelAdj:	1.00	1.00	1.00	1.00	1.00	1.00	1.00	1.00	1.00	1.00	1.00	1.00
AdjDel/Veh:	35.2	35.5	339.3	344.3	19.1	19.1	517.2	135	134.6	149.5	49.8	341.3
LOS by Move:	D	D	F	F	B	B	F	F	F	F	D	F
HCM2kAvgQ:	6	23	82	73	10	10	4	19	19	20	21	72

Note: Queue reported is the number of cars per lane.

City of Murrieta General Plan
Future General Plan (Scenario B)
PM Peak Hour

Level Of Service Computation Report
2000 HCM Operations Method (Future Volume Alternative)

Intersection #45 Jefferson Ave & Juniper St

Cycle (sec): 100 | Critical Vol./Cap.(X): 0.838
Loss Time (sec): 0 (Y+R=4.0 sec) | Average Delay (sec/veh): 21.9
Optimal Cycle: 140 | Level Of Service: C

Street Name:	Jefferson Ave						Juniper St					
Approach:	North Bound			South Bound			East Bound			West Bound		
Movement:	L -	T -	R	L -	T -	R	L -	T -	R	L -	T -	R
Control:	Protected			Protected			Protected			Protected		
Rights:	Include			Include			Include			Include		
Min. Green:	0	0	0	0	0	0	0	0	0	0	0	0
Lanes:	1 0	2 1	0	1 0	2 1	0	1 0	1 1	0	1 0	1 1	0
Volume Module:												
Base Vol:	150	2837	60	46	1660	84	358	83	371	18	58	88
Growth Adj:	1.00	1.00	1.00	1.00	1.00	1.00	1.00	1.00	1.00	1.00	1.00	1.00
Initial Bse:	150	2837	60	46	1660	84	358	83	371	18	58	88
Added Vol:	0	0	0	0	0	0	0	0	0	0	0	0
PasserByVol:	0	0	0	0	0	0	0	0	0	0	0	0
Initial Fut:	150	2837	60	46	1660	84	358	83	371	18	58	88
User Adj:	1.00	1.00	1.00	1.00	1.00	1.00	1.00	1.00	1.00	1.00	1.00	1.00
PHF Adj:	1.00	1.00	1.00	1.00	1.00	1.00	1.00	1.00	1.00	1.00	1.00	1.00
PHF Volume:	150	2837	60	46	1660	84	358	83	371	18	58	88
Reduct Vol:	0	0	0	0	0	0	0	0	0	0	0	0
Reduced Vol:	150	2837	60	46	1660	84	358	83	371	18	58	88
PCE Adj:	1.00	1.00	1.00	1.00	1.00	1.00	1.00	1.00	1.00	1.00	1.00	1.00
MLF Adj:	1.00	1.00	1.00	1.00	1.00	1.00	1.00	1.00	1.00	1.00	1.00	1.00
FinalVolume:	150	2837	60	46	1660	84	358	83	371	18	58	88
Saturation Flow Module:												
Sat/Lane:	1900	1900	1900	1900	1900	1900	1900	1900	1900	1900	1900	1900
Adjustment:	0.95	0.91	0.91	0.95	0.90	0.90	0.95	0.83	0.83	0.95	0.86	0.86
Lanes:	1.00	2.94	0.06	1.00	2.86	0.14	1.00	1.00	1.00	1.00	1.00	1.00
Final Sat.:	1805	5064	107	1805	4903	248	1805	1583	1583	1805	1643	1643
Capacity Analysis Module:												
Vol/Sat:	0.08	0.56	0.56	0.03	0.34	0.34	0.20	0.05	0.23	0.01	0.04	0.05
Crit Moves:		****		****			****					****
Green/Cycle:	0.14	0.67	0.67	0.03	0.56	0.56	0.24	0.29	0.29	0.01	0.06	0.06
Volume/Cap:	0.60	0.84	0.84	0.84	0.60	0.60	0.84	0.18	0.81	0.81	0.55	0.84
Delay/Veh:	44.7	14.4	14.4	114.1	14.9	14.9	49.9	26.7	41.9	157.3	47.9	74.7
User DelAdj:	1.00	1.00	1.00	1.00	1.00	1.00	1.00	1.00	1.00	1.00	1.00	1.00
AdjDel/Veh:	44.7	14.4	14.4	114.1	14.9	14.9	49.9	26.7	41.9	157.3	47.9	74.7
LOS by Move:	D	B	B	F	B	B	D	C	D	F	D	E
HCM2kAvgQ:	5	27	27	3	13	13	13	2	13	2	3	5

Note: Queue reported is the number of cars per lane.

City of Murrieta General Plan
Future General Plan (Scenario B)
PM Peak Hour

Level Of Service Computation Report
2000 HCM Operations Method (Future Volume Alternative)

Intersection #46 Jefferson Ave & Ivy St/Los Alamos Rd

Cycle (sec): 100 | Critical Vol./Cap.(X): 0.944
Loss Time (sec): 0 (Y+R=4.0 sec) | Average Delay (sec/veh): 35.3
Optimal Cycle: 180 | Level Of Service: D

Street Name:	Jefferson Ave						Ivy St/Los Alamos Rd					
Approach:	North Bound			South Bound			East Bound			West Bound		
Movement:	L -	T -	R	L -	T -	R	L -	T -	R	L -	T -	R
Control:	Protected			Protected			Protected			Protected		
Rights:	Include			Include			Include			Include		
Min. Green:	0	0	0	0	0	0	0	0	0	0	0	0
Lanes:	2 0	3 0	1	2 0	3 0	1	1 0	1 1	0	1 0	1 1	0
Volume Module:												
Base Vol:	294	2396	687	474	1480	110	75	188	154	257	258	496
Growth Adj:	1.00	1.00	1.00	1.00	1.00	1.00	1.00	1.00	1.00	1.00	1.00	1.00
Initial Bse:	294	2396	687	474	1480	110	75	188	154	257	258	496
Added Vol:	0	0	0	0	0	0	0	0	0	0	0	0
PasserByVol:	0	0	0	0	0	0	0	0	0	0	0	0
Initial Fut:	294	2396	687	474	1480	110	75	188	154	257	258	496
User Adj:	1.00	1.00	1.00	1.00	1.00	1.00	1.00	1.00	1.00	1.00	1.00	1.00
PHF Adj:	1.00	1.00	1.00	1.00	1.00	1.00	1.00	1.00	1.00	1.00	1.00	1.00
PHF Volume:	294	2396	687	474	1480	110	75	188	154	257	258	496
Reduct Vol:	0	0	0	0	0	0	0	0	0	0	0	0
Reduced Vol:	294	2396	687	474	1480	110	75	188	154	257	258	496
PCE Adj:	1.00	1.00	1.00	1.00	1.00	1.00	1.00	1.00	1.00	1.00	1.00	1.00
MLF Adj:	1.00	1.00	1.00	1.00	1.00	1.00	1.00	1.00	1.00	1.00	1.00	1.00
FinalVolume:	294	2396	687	474	1480	110	75	188	154	257	258	496
Saturation Flow Module:												
Sat/Lane:	1900	1900	1900	1900	1900	1900	1900	1900	1900	1900	1900	1900
Adjustment:	0.92	0.91	0.85	0.92	0.91	0.85	0.95	0.89	0.89	0.95	0.86	0.86
Lanes:	2.00	3.00	1.00	2.00	3.00	1.00	1.00	1.10	0.90	1.00	1.00	1.00
Final Sat.:	3502	5187	1615	3502	5187	1615	1805	1851	1517	1805	1626	1626
Capacity Analysis Module:												
Vol/Sat:	0.08	0.46	0.43	0.14	0.29	0.07	0.04	0.10	0.10	0.14	0.16	0.30
Crit Moves:		****		****			****					****
Green/Cycle:	0.14	0.49	0.49	0.14	0.49	0.49	0.04	0.15	0.15	0.21	0.32	0.32
Volume/Cap:	0.58	0.94	0.87	0.94	0.58	0.14	0.94	0.66	0.66	0.66	0.49	0.94
Delay/Veh:	41.8	32.4	32.9	69.1	18.6	14.1	129.5	43.2	43.2	40.3	27.5	52.4
User DelAdj:	1.00	1.00	1.00	1.00	1.00	1.00	1.00	1.00	1.00	1.00	1.00	1.00
AdjDel/Veh:	41.8	32.4	32.9	69.1	18.6	14.1	129.5	43.2	43.2	40.3	27.5	52.4
LOS by Move:	D	C	C	E	B	B	F	D	D	D	C	D
HCM2kAvgQ:	5	31	22	11	12	2	5	6	6	8	7	20

Note: Queue reported is the number of cars per lane.

City of Murrieta General Plan
Future General Plan (Scenario B)
PM Peak Hour

Level Of Service Computation Report
2000 HCM Operations Method (Future Volume Alternative)

Intersection #48 Madison Ave/I-15 SB Ramps & Kalmia St

Cycle (sec): 100 | Critical Vol./Cap.(X): 0.913
Loss Time (sec): 0 (Y+R=4.0 sec) | Average Delay (sec/veh): 32.7
Optimal Cycle: 180 | Level Of Service: C

Street Name:	Madison Ave/I-15 SB Ramps						Kalmia St					
Approach:	North Bound			South Bound			East Bound			West Bound		
Movement:	L -	T -	R	L -	T -	R	L -	T -	R	L -	T -	R
Control:	Protected			Protected			Protected			Protected		
Rights:	Include			Include			Include			Include		
Min. Green:	0	0	0	0	0	0	0	0	0	0	0	0
Lanes:	2 0	0 0	2	2 0	1 1	0	0 0	3 1	0	2 0	2 1	1
Volume Module:												
Base Vol:	379	0	968	322	28	357	0	2478	248	281	1499	606
Growth Adj:	1.00	1.00	1.00	1.00	1.00	1.00	1.00	1.00	1.00	1.00	1.00	1.00
Initial Bse:	379	0	968	322	28	357	0	2478	248	281	1499	606
Added Vol:	0	0	0	0	0	0	0	0	0	0	0	0
PasserByVol:	0	0	0	0	0	0	0	0	0	0	0	0
Initial Fut:	379	0	968	322	28	357	0	2478	248	281	1499	606
User Adj:	1.00	1.00	1.00	1.00	1.00	1.00	1.00	1.00	1.00	1.00	1.00	1.00
PHF Adj:	1.00	1.00	1.00	1.00	1.00	1.00	1.00	1.00	1.00	1.00	1.00	1.00
PHF Volume:	379	0	968	322	28	357	0	2478	248	281	1499	606
Reduct Vol:	0	0	0	0	0	0	0	0	0	0	0	0
Reduced Vol:	379	0	968	322	28	357	0	2478	248	281	1499	606
PCE Adj:	1.00	1.00	1.00	1.00	1.00	1.00	1.00	1.00	1.00	1.00	1.00	1.00
MLF Adj:	1.00	1.00	1.00	1.00	1.00	1.00	1.00	1.00	1.00	1.00	1.00	1.00
FinalVolume:	379	0	968	322	28	357	0	2478	248	281	1499	606
Saturation Flow Module:												
Sat/Lane:	1900	1900	1900	1900	1900	1900	1900	1900	1900	1900	1900	1900
Adjustment:	0.92	1.00	0.75	0.92	0.82	0.82	1.00	0.90	0.90	0.92	0.87	0.87
Lanes:	2.00	0.00	2.00	2.00	1.00	1.00	0.00	3.64	0.36	2.00	2.85	1.15
Final Sat.:	3502	0	2842	3502	1554	1554	0	6199	620	3502	4713	1905
Capacity Analysis Module:												
Vol/Sat:	0.11	0.00	0.34	0.09	0.02	0.23	0.00	0.40	0.40	0.08	0.32	0.32
Crit Moves:			****	****				****		****		
Green/Cycle:	0.15	0.00	0.37	0.10	0.32	0.32	0.00	0.44	0.44	0.09	0.53	0.53
Volume/Cap:	0.71	0.00	0.91	0.91	0.06	0.71	0.00	0.91	0.91	0.91	0.60	0.60
Delay/Veh:	44.9	0.0	41.5	71.6	23.4	34.3	0.0	31.1	31.1	75.1	16.8	16.8
User DelAdj:	1.00	1.00	1.00	1.00	1.00	1.00	1.00	1.00	1.00	1.00	1.00	1.00
AdjDel/Veh:	44.9	0.0	41.5	71.6	23.4	34.3	0.0	31.1	31.1	75.1	16.8	16.8
LOS by Move:	D	A	D	E	C	C	A	C	C	E	B	B
HCM2kAvgQ:	7	0	20	8	1	11	0	26	26	7	13	13

Note: Queue reported is the number of cars per lane.

City of Murrieta General Plan
Future General Plan (Scenario B)
PM Peak Hour

Level Of Service Computation Report
2000 HCM Operations Method (Future Volume Alternative)

Intersection #50 Hancock Ave & Murrieta Hot Springs Rd

Cycle (sec): 100 | Critical Vol./Cap.(X): 0.817
Loss Time (sec): 0 (Y+R=4.0 sec) | Average Delay (sec/veh): 18.0
Optimal Cycle: 125 | Level Of Service: B

Street Name:	Hancock Ave						Murrieta Hot Springs Rd					
Approach:	North Bound			South Bound			East Bound			West Bound		
Movement:	L -	T -	R	L -	T -	R	L -	T -	R	L -	T -	R
Control:	Protected			Protected			Protected			Protected		
Rights:	Include			Ovl			Include			Include		
Min. Green:	0	0	0	0	0	0	0	0	0	0	0	0
Lanes:	0 0	0 0	0	2 0	0 0	2	2 0	4 0	0	0 0	3 1	0
Volume Module:												
Base Vol:	0	0	0	583	0	894	827	3365	0	0	2518	303
Growth Adj:	1.00	1.00	1.00	1.00	1.00	1.00	1.00	1.00	1.00	1.00	1.00	1.00
Initial Bse:	0	0	0	583	0	894	827	3365	0	0	2518	303
Added Vol:	0	0	0	0	0	0	0	0	0	0	0	0
PasserByVol:	0	0	0	0	0	0	0	0	0	0	0	0
Initial Fut:	0	0	0	583	0	894	827	3365	0	0	2518	303
User Adj:	1.00	1.00	1.00	1.00	1.00	1.00	1.00	1.00	1.00	1.00	1.00	1.00
PHF Adj:	1.00	1.00	1.00	1.00	1.00	1.00	1.00	1.00	1.00	1.00	1.00	1.00
PHF Volume:	0	0	0	583	0	894	827	3365	0	0	2518	303
Reduct Vol:	0	0	0	0	0	0	0	0	0	0	0	0
Reduced Vol:	0	0	0	583	0	894	827	3365	0	0	2518	303
PCE Adj:	1.00	1.00	1.00	1.00	1.00	1.00	1.00	1.00	1.00	1.00	1.00	1.00
MLF Adj:	1.00	1.00	1.00	1.00	1.00	1.00	1.00	1.00	1.00	1.00	1.00	1.00
FinalVolume:	0	0	0	583	0	894	827	3365	0	0	2518	303
Saturation Flow Module:												
Sat/Lane:	1900	1900	1900	1900	1900	1900	1900	1900	1900	1900	1900	1900
Adjustment:	1.00	1.00	1.00	0.92	1.00	0.75	0.92	0.91	1.00	1.00	0.90	0.90
Lanes:	0.00	0.00	0.00	2.00	0.00	2.00	2.00	4.00	0.00	0.00	3.57	0.43
Final Sat.:	0	0	0	3502	0	2842	3502	6916	0	0	6074	731
Capacity Analysis Module:												
Vol/Sat:	0.00	0.00	0.00	0.17	0.00	0.31	0.24	0.49	0.00	0.00	0.41	0.41
Crit Moves:				****			****				****	
Green/Cycle:	0.00	0.00	0.00	0.20	0.00	0.49	0.29	0.80	0.00	0.00	0.51	0.51
Volume/Cap:	0.00	0.00	0.00	0.82	0.00	0.64	0.82	0.61	0.00	0.00	0.82	0.82
Delay/Veh:	0.0	0.0	0.0	45.4	0.0	19.8	38.4	4.2	0.0	0.0	22.4	22.4
User DelAdj:	1.00	1.00	1.00	1.00	1.00	1.00	1.00	1.00	1.00	1.00	1.00	1.00
AdjDel/Veh:	0.0	0.0	0.0	45.4	0.0	19.8	38.4	4.2	0.0	0.0	22.4	22.4
LOS by Move:	A	A	A	D	A	B	D	A	A	A	C	C
HCM2kAvgQ:	0	0	0	11	0	12	14	12	0	0	22	22

Note: Queue reported is the number of cars per lane.

City of Murrieta General Plan
Future General Plan (Scenario B)
PM Peak Hour

Level Of Service Computation Report
2000 HCM Operations Method (Future Volume Alternative)

Intersection #51 Alta Murrieta Dr & Murrieta Hot Springs Rd

Cycle (sec): 100 | Critical Vol./Cap.(X): 1.023
Loss Time (sec): 0 (Y+R=4.0 sec) | Average Delay (sec/veh): 53.6
Optimal Cycle: 180 | Level Of Service: D

Street Name:	Alta Murrieta Dr						Murrieta Hot Springs Rd					
Approach:	North Bound			South Bound			East Bound			West Bound		
Movement:	L -	T -	R	L -	T -	R	L -	T -	R	L -	T -	R
Control:	Protected			Protected			Protected			Protected		
Rights:	Include			Include			Include			Ovl		
Min. Green:	0	0	0	0	0	0	0	0	0	0	0	0
Lanes:	2 0	1 0	1	2 0	1 1	0	2 0	2 1	0	2 0	4 0	1
Volume Module:												
Base Vol:	597	223	53	194	128	496	701	1703	520	174	2354	154
Growth Adj:	1.00	1.00	1.00	1.00	1.00	1.00	1.00	1.00	1.00	1.00	1.00	1.00
Initial Bse:	597	223	53	194	128	496	701	1703	520	174	2354	154
Added Vol:	0	0	0	0	0	0	0	0	0	0	0	0
PasserByVol:	0	0	0	0	0	0	0	0	0	0	0	0
Initial Fut:	597	223	53	194	128	496	701	1703	520	174	2354	154
User Adj:	1.00	1.00	1.00	1.00	1.00	1.00	1.00	1.00	1.00	1.00	1.00	1.00
PHF Adj:	1.00	1.00	1.00	1.00	1.00	1.00	1.00	1.00	1.00	1.00	1.00	1.00
PHF Volume:	597	223	53	194	128	496	701	1703	520	174	2354	154
Reduct Vol:	0	0	0	0	0	0	0	0	0	0	0	0
Reduced Vol:	597	223	53	194	128	496	701	1703	520	174	2354	154
PCE Adj:	1.00	1.00	1.00	1.00	1.00	1.00	1.00	1.00	1.00	1.00	1.00	1.00
MLF Adj:	1.00	1.00	1.00	1.00	1.00	1.00	1.00	1.00	1.00	1.00	1.00	1.00
FinalVolume:	597	223	53	194	128	496	701	1703	520	174	2354	154
Saturation Flow Module:												
Sat/Lane:	1900	1900	1900	1900	1900	1900	1900	1900	1900	1900	1900	1900
Adjustment:	0.92	1.00	0.85	0.92	0.84	0.84	0.92	0.88	0.88	0.92	0.91	0.85
Lanes:	2.00	1.00	1.00	2.00	1.00	1.00	2.00	2.30	0.70	2.00	4.00	1.00
Final Sat.:	3502	1900	1615	3502	1590	1590	3502	3835	1171	3502	6916	1615
Capacity Analysis Module:												
Vol/Sat:	0.17	0.12	0.03	0.06	0.08	0.31	0.20	0.44	0.44	0.05	0.34	0.10
Crit Moves:	****					****	****				****	
Green/Cycle:	0.17	0.32	0.32	0.15	0.30	0.30	0.20	0.48	0.48	0.05	0.33	0.48
Volume/Cap:	1.02	0.37	0.10	0.37	0.26	1.02	1.02	0.93	0.93	0.93	1.02	0.20
Delay/Veh:	84.9	26.5	24.0	38.6	26.3	77.1	80.5	32.4	32.4	94.5	58.2	14.8
User DelAdj:	1.00	1.00	1.00	1.00	1.00	1.00	1.00	1.00	1.00	1.00	1.00	1.00
AdjDel/Veh:	84.9	26.5	24.0	38.6	26.3	77.1	80.5	32.4	32.4	94.5	58.2	14.8
LOS by Move:	F	C	C	D	C	E	F	C	C	F	E	B
HCM2kAvgQ:	15	5	1	3	3	23	17	28	28	5	28	3

Note: Queue reported is the number of cars per lane.

City of Murrieta General Plan
Future General Plan (Scenario B)
PM Peak Hour

Level Of Service Computation Report
2000 HCM Operations Method (Future Volume Alternative)

Intersection #52 Winchester Road - SR-79 & Murrieta Hot Springs Rd

Cycle (sec): 100 | Critical Vol./Cap.(X): 1.367
Loss Time (sec): 0 (Y+R=4.0 sec) | Average Delay (sec/veh): 102.6
Optimal Cycle: 180 | Level Of Service: F

Street Name:	Winchester Road - SR-79						Murrieta Hot Springs Rd					
Approach:	North Bound			South Bound			East Bound			West Bound		
Movement:	L -	T -	R	L -	T -	R	L -	T -	R	L -	T -	R
Control:	Protected			Protected			Protected			Protected		
Rights:	Ovl			Include			Include			Include		
Min. Green:	0	0	0	0	0	0	0	0	0	0	0	0
Lanes:	2 0	3 0	1	2 0	3 0	1	2 0	3 0	1	2 0	2 1	0
Volume Module:												
Base Vol:	340	1979	203	201	1167	1117	1437	1044	276	245	756	98
Growth Adj:	1.00	1.00	1.00	1.00	1.00	1.00	1.00	1.00	1.00	1.00	1.00	1.00
Initial Bse:	340	1979	203	201	1167	1117	1437	1044	276	245	756	98
Added Vol:	0	0	0	0	0	0	0	0	0	0	0	0
PasserByVol:	0	0	0	0	0	0	0	0	0	0	0	0
Initial Fut:	340	1979	203	201	1167	1117	1437	1044	276	245	756	98
User Adj:	1.00	1.00	1.00	1.00	1.00	1.00	1.00	1.00	1.00	1.00	1.00	1.00
PHF Adj:	1.00	1.00	1.00	1.00	1.00	1.00	1.00	1.00	1.00	1.00	1.00	1.00
PHF Volume:	340	1979	203	201	1167	1117	1437	1044	276	245	756	98
Reduct Vol:	0	0	0	0	0	0	0	0	0	0	0	0
Reduced Vol:	340	1979	203	201	1167	1117	1437	1044	276	245	756	98
PCE Adj:	1.00	1.00	1.00	1.00	1.00	1.00	1.00	1.00	1.00	1.00	1.00	1.00
MLF Adj:	1.00	1.00	1.00	1.00	1.00	1.00	1.00	1.00	1.00	1.00	1.00	1.00
FinalVolume:	340	1979	203	201	1167	1117	1437	1044	276	245	756	98
Saturation Flow Module:												
Sat/Lane:	1900	1900	1900	1900	1900	1900	1900	1900	1900	1900	1900	1900
Adjustment:	0.92	0.91	0.85	0.92	0.91	0.85	0.92	0.91	0.85	0.92	0.89	0.89
Lanes:	2.00	3.00	1.00	2.00	3.00	1.00	2.00	3.00	1.00	2.00	2.66	0.34
Final Sat.:	3502	5187	1615	3502	5187	1615	3502	5187	1615	3502	4514	585
Capacity Analysis Module:												
Vol/Sat:	0.10	0.38	0.13	0.06	0.22	0.69	0.41	0.20	0.17	0.07	0.17	0.17
Crit Moves:	****					****	****				****	
Green/Cycle:	0.07	0.50	0.61	0.08	0.51	0.51	0.30	0.31	0.31	0.11	0.12	0.12
Volume/Cap:	1.37	0.76	0.21	0.76	0.44	1.37	1.37	0.64	0.54	0.64	1.37	1.37
Delay/Veh:	235.0	21.4	8.8	57.5	15.9	197.5	206.1	30.4	29.6	46.4	219	219.0
User DelAdj:	1.00	1.00	1.00	1.00	1.00	1.00	1.00	1.00	1.00	1.00	1.00	1.00
AdjDel/Veh:	235.0	21.4	8.8	57.5	15.9	197.5	206.1	30.4	29.6	46.4	219	219.0
LOS by Move:	F	C	A	E	B	F	F	C	C	D	F	F
HCM2kAvgQ:	13	19	3	5	8	72	49	11	7	5	22	22

Note: Queue reported is the number of cars per lane.

City of Murrieta General Plan
Future General Plan (Scenario B)
PM Peak Hour

Level Of Service Computation Report
2000 HCM Operations Method (Future Volume Alternative)

Intersection #53 Hancock Ave & Los Alamos Rd

Cycle (sec): 100 | Critical Vol./Cap.(X): 1.650
Loss Time (sec): 0 (Y+R=4.0 sec) | Average Delay (sec/veh): 238.4
Optimal Cycle: 180 | Level Of Service: F

Street Name:	Hancock Ave						Los Alamos Rd					
Approach:	North Bound			South Bound			East Bound			West Bound		
Movement:	L -	T -	R	L -	T -	R	L -	T -	R	L -	T -	R
Control:	Protected			Protected			Protected			Protected		
Rights:	Include			Include			Include			Include		
Min. Green:	0	0	0	0	0	0	0	0	0	0	0	0
Lanes:	1 0	1 1	0	2 0	0 1	0	1 0	1 1	0	1 0	1 1	0
Volume Module:												
Base Vol:	124	453	916	658	124	25	106	2012	51	585	1301	694
Growth Adj:	1.00	1.00	1.00	1.00	1.00	1.00	1.00	1.00	1.00	1.00	1.00	1.00
Initial Bse:	124	453	916	658	124	25	106	2012	51	585	1301	694
Added Vol:	0	0	0	0	0	0	0	0	0	0	0	0
PasserByVol:	0	0	0	0	0	0	0	0	0	0	0	0
Initial Fut:	124	453	916	658	124	25	106	2012	51	585	1301	694
User Adj:	1.00	1.00	1.00	1.00	1.00	1.00	1.00	1.00	1.00	1.00	1.00	1.00
PHF Adj:	1.00	1.00	1.00	1.00	1.00	1.00	1.00	1.00	1.00	1.00	1.00	1.00
PHF Volume:	124	453	916	658	124	25	106	2012	51	585	1301	694
Reduct Vol:	0	0	0	0	0	0	0	0	0	0	0	0
Reduced Vol:	124	453	916	658	124	25	106	2012	51	585	1301	694
PCE Adj:	1.00	1.00	1.00	1.00	1.00	1.00	1.00	1.00	1.00	1.00	1.00	1.00
MLF Adj:	1.00	1.00	1.00	1.00	1.00	1.00	1.00	1.00	1.00	1.00	1.00	1.00
FinalVolume:	124	453	916	658	124	25	106	2012	51	585	1301	694
Saturation Flow Module:												
Sat/Lane:	1900	1900	1900	1900	1900	1900	1900	1900	1900	1900	1900	1900
Adjustment:	0.95	0.86	0.86	0.92	0.98	0.98	0.95	0.95	0.95	0.95	0.90	0.90
Lanes:	1.00	1.00	1.00	2.00	0.83	0.17	1.00	1.95	0.05	1.00	1.30	0.70
Final Sat.:	1805	1625	1625	3502	1542	311	1805	3507	89	1805	2232	1191
Capacity Analysis Module:												
Vol/Sat:	0.07	0.28	0.56	0.19	0.08	0.08	0.06	0.57	0.57	0.32	0.58	0.58
Crit Moves:			****	****				****		****		
Green/Cycle:	0.21	0.34	0.34	0.11	0.25	0.25	0.05	0.35	0.35	0.20	0.49	0.49
Volume/Cap:	0.33	0.82	1.65	1.65	0.33	0.33	1.18	1.65	1.65	1.65	1.18	1.18
Delay/Veh:	34.0	33.3	330.7	347.7	31.4	31.4	198.4	329	328.6	344.9	112	112.3
User DelAdj:	1.00	1.00	1.00	1.00	1.00	1.00	1.00	1.00	1.00	1.00	1.00	1.00
AdjDel/Veh:	34.0	33.3	330.7	347.7	31.4	31.4	198.4	329	328.6	344.9	112	112.3
LOS by Move:	C	C	F	F	C	C	F	F	F	F	F	F
HCM2kAvgQ:	3	16	77	28	4	4	8	86	86	47	54	54

Note: Queue reported is the number of cars per lane.

City of Murrieta General Plan
Future General Plan (Scenario B)
PM Peak Hour

Level Of Service Computation Report
2000 HCM Operations Method (Future Volume Alternative)

Intersection #54 I-215 SB Ramps & Los Alamos Rd

Cycle (sec): 100 Critical Vol./Cap.(X): 1.466
Loss Time (sec): 0 (Y+R=4.0 sec) Average Delay (sec/veh): 168.4
Optimal Cycle: 180 Level Of Service: F

Street Name:	I-215 SB Ramps						Los Alamos Rd					
Approach:	North Bound			South Bound			East Bound			West Bound		
Movement:	L -	T -	R	L -	T -	R	L -	T -	R	L -	T -	R
Control:	Protected			Protected			Protected			Protected		
Rights:	Include			Include			Include			Include		
Min. Green:	0	0	0	0	0	0	0	0	0	0	0	0
Lanes:	0 0	0 0	0	1 0	1! 0	1	0 0	2 0	1	2 0	2 0	0
Volume Module:												
Base Vol:	0	0	0	532	0	1542	0	3236	443	136	1247	0
Growth Adj:	1.00	1.00	1.00	1.00	1.00	1.00	1.00	1.00	1.00	1.00	1.00	1.00
Initial Bse:	0	0	0	532	0	1542	0	3236	443	136	1247	0
Added Vol:	0	0	0	0	0	0	0	0	0	0	0	0
PasserByVol:	0	0	0	0	0	0	0	0	0	0	0	0
Initial Fut:	0	0	0	532	0	1542	0	3236	443	136	1247	0
User Adj:	1.00	1.00	1.00	1.00	1.00	1.00	1.00	1.00	1.00	1.00	1.00	1.00
PHF Adj:	1.00	1.00	1.00	1.00	1.00	1.00	1.00	1.00	1.00	1.00	1.00	1.00
PHF Volume:	0	0	0	532	0	1542	0	3236	443	136	1247	0
Reduct Vol:	0	0	0	0	0	0	0	0	0	0	0	0
Reduced Vol:	0	0	0	532	0	1542	0	3236	443	136	1247	0
PCE Adj:	1.00	1.00	1.00	1.00	1.00	1.00	1.00	1.00	1.00	1.00	1.00	1.00
MLF Adj:	1.00	1.00	1.00	1.00	1.00	1.00	1.00	1.00	1.00	1.00	1.00	1.00
FinalVolume:	0	0	0	532	0	1542	0	3236	443	136	1247	0
Saturation Flow Module:												
Sat/Lane:	1900	1900	1900	1900	1900	1900	1900	1900	1900	1900	1900	1900
Adjustment:	1.00	1.00	1.00	0.88	1.00	0.88	1.00	0.95	0.85	0.92	0.95	1.00
Lanes:	0.00	0.00	0.00	1.26	0.00	1.74	0.00	2.00	1.00	2.00	2.00	0.00
Final Sat.:	0	0	0	2095	0	2907	0	3610	1615	3502	3610	0
Capacity Analysis Module:												
Vol/Sat:	0.00	0.00	0.00	0.25	0.00	0.53	0.00	0.90	0.27	0.04	0.35	0.00
Crit Moves:						****		****		****		
Green/Cycle:	0.00	0.00	0.00	0.36	0.00	0.36	0.00	0.61	0.61	0.03	0.64	0.00
Volume/Cap:	0.00	0.00	0.00	0.70	0.00	1.47	0.00	1.47	0.45	1.47	0.54	0.00
Delay/Veh:	0.0	0.0	0.0	28.1	0.0	245.4	0.0	232	10.7	307.7	10.3	0.0
User DelAdj:	1.00	1.00	1.00	1.00	1.00	1.00	1.00	1.00	1.00	1.00	1.00	1.00
AdjDel/Veh:	0.0	0.0	0.0	28.1	0.0	245.4	0.0	232	10.7	307.7	10.3	0.0
LOS by Move:	A	A	A	C	A	F	A	F	B	F	B	A
HCM2kAvgQ:	0	0	0	12	0	63	0	118	7	7	11	0

Note: Queue reported is the number of cars per lane.

City of Murrieta General Plan
Future General Plan (Scenario B)
PM Peak Hour

Level Of Service Computation Report
2000 HCM Operations Method (Future Volume Alternative)

Intersection #55 I-215 NB Ramps & Los Alamos Rd

Cycle (sec): 100 Critical Vol./Cap.(X): 0.914
Loss Time (sec): 0 (Y+R=4.0 sec) Average Delay (sec/veh): 24.4
Optimal Cycle: 180 Level Of Service: C

Street Name:	I-215 NB Ramps						Los Alamos Rd					
Approach:	North Bound			South Bound			East Bound			West Bound		
Movement:	L -	T -	R	L -	T -	R	L -	T -	R	L -	T -	R
Control:	Protected			Protected			Protected			Protected		
Rights:	Include			Include			Include			Include		
Min. Green:	0	0	0	0	0	0	0	0	0	0	0	0
Lanes:	1 0	0 0	1	0 0	0 0	0	2 0	3 0	0	0 0	2 0	1
Volume Module:												
Base Vol:	246	0	159	0	0	0	1617	2080	0	0	1139	329
Growth Adj:	1.00	1.00	1.00	1.00	1.00	1.00	1.00	1.00	1.00	1.00	1.00	1.00
Initial Bse:	246	0	159	0	0	0	1617	2080	0	0	1139	329
Added Vol:	0	0	0	0	0	0	0	0	0	0	0	0
PasserByVol:	0	0	0	0	0	0	0	0	0	0	0	0
Initial Fut:	246	0	159	0	0	0	1617	2080	0	0	1139	329
User Adj:	1.00	1.00	1.00	1.00	1.00	1.00	1.00	1.00	1.00	1.00	1.00	1.00
PHF Adj:	1.00	1.00	1.00	1.00	1.00	1.00	1.00	1.00	1.00	1.00	1.00	1.00
PHF Volume:	246	0	159	0	0	0	1617	2080	0	0	1139	329
Reduct Vol:	0	0	0	0	0	0	0	0	0	0	0	0
Reduced Vol:	246	0	159	0	0	0	1617	2080	0	0	1139	329
PCE Adj:	1.00	1.00	1.00	1.00	1.00	1.00	1.00	1.00	1.00	1.00	1.00	1.00
MLF Adj:	1.00	1.00	1.00	1.00	1.00	1.00	1.00	1.00	1.00	1.00	1.00	1.00
FinalVolume:	246	0	159	0	0	0	1617	2080	0	0	1139	329
Saturation Flow Module:												
Sat/Lane:	1900	1900	1900	1900	1900	1900	1900	1900	1900	1900	1900	1900
Adjustment:	0.95	1.00	0.85	1.00	1.00	1.00	0.92	0.91	1.00	1.00	0.95	0.85
Lanes:	1.00	0.00	1.00	0.00	0.00	0.00	2.00	3.00	0.00	0.00	2.00	1.00
Final Sat.:	1805	0	1615	0	0	0	3502	5187	0	0	3610	1615
Capacity Analysis Module:												
Vol/Sat:	0.14	0.00	0.10	0.00	0.00	0.00	0.46	0.40	0.00	0.00	0.32	0.20
Crit Moves:	****						****				****	
Green/Cycle:	0.15	0.00	0.15	0.00	0.00	0.00	0.51	0.85	0.00	0.00	0.35	0.35
Volume/Cap:	0.91	0.00	0.66	0.00	0.00	0.00	0.91	0.47	0.00	0.00	0.91	0.59
Delay/Veh:	74.9	0.0	46.8	0.0	0.0	0.0	30.4	1.9	0.0	0.0	41.7	28.6
User DelAdj:	1.00	1.00	1.00	1.00	1.00	1.00	1.00	1.00	1.00	1.00	1.00	1.00
AdjDel/Veh:	74.9	0.0	46.8	0.0	0.0	0.0	30.4	1.9	0.0	0.0	41.7	28.6
LOS by Move:	E	A	D	A	A	A	C	A	A	A	D	C
HCM2kAvgQ:	11	0	6	0	0	0	28	6	0	0	22	9

Note: Queue reported is the number of cars per lane.

City of Murrieta General Plan
Future General Plan (Scenario B)
PM Peak Hour

Level Of Service Computation Report
2000 HCM Operations Method (Future Volume Alternative)

Intersection #56 Whitewood Rd & Los Alamos Rd

Cycle (sec): 100 Critical Vol./Cap.(X): 0.992
Loss Time (sec): 0 (Y+R=4.0 sec) Average Delay (sec/veh): 44.7
Optimal Cycle: 180 Level Of Service: D

Street Name:	Whitewood Rd						Los Alamos Rd					
Approach:	North Bound			South Bound			East Bound			West Bound		
Movement:	L -	T -	R	L -	T -	R	L -	T -	R	L -	T -	R
Control:	Protected			Protected			Protected			Protected		
Rights:	Include			Include			Include			Include		
Min. Green:	0	0	0	0	0	0	0	0	0	0	0	0
Lanes:	1 0	1	1 0	1 0	2	0 1	1 0	2	0 1	1 0	1	1 0
Volume Module:												
Base Vol:	147	646	41	38	562	538	911	412	307	62	211	46
Growth Adj:	1.00	1.00	1.00	1.00	1.00	1.00	1.00	1.00	1.00	1.00	1.00	1.00
Initial Bse:	147	646	41	38	562	538	911	412	307	62	211	46
Added Vol:	0	0	0	0	0	0	0	0	0	0	0	0
PasserByVol:	0	0	0	0	0	0	0	0	0	0	0	0
Initial Fut:	147	646	41	38	562	538	911	412	307	62	211	46
User Adj:	1.00	1.00	1.00	1.00	1.00	1.00	1.00	1.00	1.00	1.00	1.00	1.00
PHF Adj:	1.00	1.00	1.00	1.00	1.00	1.00	1.00	1.00	1.00	1.00	1.00	1.00
PHF Volume:	147	646	41	38	562	538	911	412	307	62	211	46
Reduct Vol:	0	0	0	0	0	0	0	0	0	0	0	0
Reduced Vol:	147	646	41	38	562	538	911	412	307	62	211	46
PCE Adj:	1.00	1.00	1.00	1.00	1.00	1.00	1.00	1.00	1.00	1.00	1.00	1.00
MLF Adj:	1.00	1.00	1.00	1.00	1.00	1.00	1.00	1.00	1.00	1.00	1.00	1.00
FinalVolume:	147	646	41	38	562	538	911	412	307	62	211	46
Saturation Flow Module:												
Sat/Lane:	1900	1900	1900	1900	1900	1900	1900	1900	1900	1900	1900	1900
Adjustment:	0.95	0.94	0.94	0.95	0.95	0.85	0.95	0.95	0.85	0.95	0.92	0.92
Lanes:	1.00	1.88	0.12	1.00	2.00	1.00	1.00	2.00	1.00	1.00	1.64	0.36
Final Sat.:	1805	3364	214	1805	3610	1615	1805	3610	1615	1805	2884	629
Capacity Analysis Module:												
Vol/Sat:	0.08	0.19	0.19	0.02	0.16	0.33	0.50	0.11	0.19	0.03	0.07	0.07
Crit Moves:	****					****	****				****	
Green/Cycle:	0.08	0.38	0.38	0.04	0.34	0.34	0.51	0.49	0.49	0.09	0.07	0.07
Volume/Cap:	0.99	0.51	0.51	0.51	0.46	0.99	0.99	0.23	0.39	0.39	0.99	0.99
Delay/Veh:	117.4	24.4	24.4	52.7	26.4	69.7	52.1	14.6	16.2	44.5	xxxx	100.0
User DelAdj:	1.00	1.00	1.00	1.00	1.00	1.00	1.00	1.00	1.00	1.00	1.00	1.00
AdjDel/Veh:	117.4	24.4	24.4	52.7	26.4	69.7	52.1	14.6	16.2	44.5	xxxx	100.0
LOS by Move:	F	C	C	D	C	E	D	B	B	D	F	F
HCM2kAvgQ:	8	9	9	2	7	23	35	4	6	2	8	8

Note: Queue reported is the number of cars per lane.

City of Murrieta General Plan
Future General Plan (Scenario B)
PM Peak Hour

Level Of Service Computation Report
2000 HCM Operations Method (Future Volume Alternative)

Intersection #57 Whitewood Rd & Murrieta Hot Springs Rd

Cycle (sec): 100 Critical Vol./Cap.(X): 1.167
Loss Time (sec): 0 (Y+R=4.0 sec) Average Delay (sec/veh): 90.3
Optimal Cycle: 180 Level Of Service: F

Street Name:	Whitewood Rd						Murrieta Hot Springs Rd					
Approach:	North Bound			South Bound			East Bound			West Bound		
Movement:	L -	T -	R	L -	T -	R	L -	T -	R	L -	T -	R
Control:	Protected			Protected			Protected			Protected		
Rights:	Include			Include			Include			Include		
Min. Green:	0	0	0	0	0	0	0	0	0	0	0	0
Lanes:	1 0	1	1 0	1 0	1	1 0	1 0	2	1 0	1 0	2	1 0
Volume Module:												
Base Vol:	445	344	533	360	263	236	179	1631	170	395	2251	490
Growth Adj:	1.00	1.00	1.00	1.00	1.00	1.00	1.00	1.00	1.00	1.00	1.00	1.00
Initial Bse:	445	344	533	360	263	236	179	1631	170	395	2251	490
Added Vol:	0	0	0	0	0	0	0	0	0	0	0	0
PasserByVol:	0	0	0	0	0	0	0	0	0	0	0	0
Initial Fut:	445	344	533	360	263	236	179	1631	170	395	2251	490
User Adj:	1.00	1.00	1.00	1.00	1.00	1.00	1.00	1.00	1.00	1.00	1.00	1.00
PHF Adj:	1.00	1.00	1.00	1.00	1.00	1.00	1.00	1.00	1.00	1.00	1.00	1.00
PHF Volume:	445	344	533	360	263	236	179	1631	170	395	2251	490
Reduct Vol:	0	0	0	0	0	0	0	0	0	0	0	0
Reduced Vol:	445	344	533	360	263	236	179	1631	170	395	2251	490
PCE Adj:	1.00	1.00	1.00	1.00	1.00	1.00	1.00	1.00	1.00	1.00	1.00	1.00
MLF Adj:	1.00	1.00	1.00	1.00	1.00	1.00	1.00	1.00	1.00	1.00	1.00	1.00
FinalVolume:	445	344	533	360	263	236	179	1631	170	395	2251	490
Saturation Flow Module:												
Sat/Lane:	1900	1900	1900	1900	1900	1900	1900	1900	1900	1900	1900	1900
Adjustment:	0.95	0.86	0.86	0.95	0.88	0.88	0.95	0.90	0.90	0.95	0.89	0.89
Lanes:	1.00	1.00	1.00	1.00	1.05	0.95	1.00	2.72	0.28	1.00	2.46	0.54
Final Sat.:	1805	1641	1641	1805	1768	1586	1805	4632	483	1805	4145	902
Capacity Analysis Module:												
Vol/Sat:	0.25	0.21	0.32	0.20	0.15	0.15	0.10	0.35	0.35	0.22	0.54	0.54
Crit Moves:			****	****			****				****	
Green/Cycle:	0.28	0.28	0.28	0.17	0.17	0.17	0.09	0.34	0.34	0.21	0.47	0.47
Volume/Cap:	0.88	0.75	1.17	1.17	0.88	0.88	1.17	1.04	1.04	1.04	1.17	1.17
Delay/Veh:	50.5	35.8	125.1	145.8	55.3	55.3	170.2	64.9	64.9	95.5	107	106.7
User DelAdj:	1.00	1.00	1.00	1.00	1.00	1.00	1.00	1.00	1.00	1.00	1.00	1.00
AdjDel/Veh:	50.5	35.8	125.1	145.8	55.3	55.3	170.2	64.9	64.9	95.5	107	106.7
LOS by Move:	D	D	F	F	E	E	F	E	E	F	F	F
HCM2kAvgQ:	16	12	30	21	11	11	12	29	29	19	51	51

Note: Queue reported is the number of cars per lane.

City of Murrieta General Plan
Future General Plan (Scenario B)
PM Peak Hour

Level Of Service Computation Report
2000 HCM Operations Method (Future Volume Alternative)

Intersection #59 Nutmeg St & Clinton Keith Rd

Cycle (sec): 100 Critical Vol./Cap.(X): 1.161
Loss Time (sec): 0 (Y+R=4.0 sec) Average Delay (sec/veh): 81.0
Optimal Cycle: 180 Level Of Service: F

Street Name:	Nutmeg St						Clinton Keith Rd					
Approach:	North Bound			South Bound			East Bound			West Bound		
Movement:	L -	T -	R	L -	T -	R	L -	T -	R	L -	T -	R
Control:	Protected			Protected			Protected			Protected		
Rights:	Include			Include			Include			Include		
Min. Green:	0	0	0	0	0	0	0	0	0	0	0	0
Lanes:	1 0	1	1 0	1 0	1	1 0	1 0	2	1 0	1 0	2	1 0
Volume Module:												
Base Vol:	64	87	510	315	31	54	99	1885	64	515	1860	369
Growth Adj:	1.00	1.00	1.00	1.00	1.00	1.00	1.00	1.00	1.00	1.00	1.00	1.00
Initial Bse:	64	87	510	315	31	54	99	1885	64	515	1860	369
Added Vol:	0	0	0	0	0	0	0	0	0	0	0	0
PasserByVol:	0	0	0	0	0	0	0	0	0	0	0	0
Initial Fut:	64	87	510	315	31	54	99	1885	64	515	1860	369
User Adj:	1.00	1.00	1.00	1.00	1.00	1.00	1.00	1.00	1.00	1.00	1.00	1.00
PHF Adj:	1.00	1.00	1.00	1.00	1.00	1.00	1.00	1.00	1.00	1.00	1.00	1.00
PHF Volume:	64	87	510	315	31	54	99	1885	64	515	1860	369
Reduct Vol:	0	0	0	0	0	0	0	0	0	0	0	0
Reduced Vol:	64	87	510	315	31	54	99	1885	64	515	1860	369
PCE Adj:	1.00	1.00	1.00	1.00	1.00	1.00	1.00	1.00	1.00	1.00	1.00	1.00
MLF Adj:	1.00	1.00	1.00	1.00	1.00	1.00	1.00	1.00	1.00	1.00	1.00	1.00
FinalVolume:	64	87	510	315	31	54	99	1885	64	515	1860	369
Saturation Flow Module:												
Sat/Lane:	1900	1900	1900	1900	1900	1900	1900	1900	1900	1900	1900	1900
Adjustment:	0.95	0.83	0.83	0.95	0.86	0.86	0.95	0.91	0.91	0.95	0.89	0.89
Lanes:	1.00	1.00	1.00	1.00	1.00	1.00	1.00	2.90	0.10	1.00	2.50	0.50
Final Sat.:	1805	1574	1574	1805	1634	1634	1805	4992	169	1805	4220	837
Capacity Analysis Module:												
Vol/Sat:	0.04	0.06	0.32	0.17	0.02	0.03	0.05	0.38	0.38	0.29	0.44	0.44
Crit Moves:			****	****				****		****		
Green/Cycle:	0.22	0.28	0.28	0.15	0.21	0.21	0.06	0.33	0.33	0.25	0.51	0.51
Volume/Cap:	0.16	0.20	1.16	1.16	0.09	0.16	0.87	1.16	1.16	1.16	0.87	0.87
Delay/Veh:	31.6	27.5	128.5	148.0	32.1	32.7	92.6	113	113.4	132.7	25.1	25.1
User DelAdj:	1.00	1.00	1.00	1.00	1.00	1.00	1.00	1.00	1.00	1.00	1.00	1.00
AdjDel/Veh:	31.6	27.5	128.5	148.0	32.1	32.7	92.6	113	113.4	132.7	25.1	25.1
LOS by Move:	C	C	F	F	C	C	F	F	F	F	C	C
HCM2kAvgQ:	2	2	29	18	1	1	5	37	37	28	25	25

Note: Queue reported is the number of cars per lane.

City of Murrieta General Plan
Future General Plan (Scenario B)
PM Peak Hour

Level Of Service Computation Report
2000 HCM Operations Method (Future Volume Alternative)

Intersection #60 Murrieta Oaks Ave-Mitchell Rd & Clinton Keith Rd

Cycle (sec): 100 Critical Vol./Cap.(X): 1.286
Loss Time (sec): 0 (Y+R=4.0 sec) Average Delay (sec/veh): 115.0
Optimal Cycle: 180 Level Of Service: F

Street Name:	Murrieta Oaks Ave-Mitchell Rd						Clinton Keith Rd					
Approach:	North Bound			South Bound			East Bound			West Bound		
Movement:	L -	T -	R	L -	T -	R	L -	T -	R	L -	T -	R
Control:	Protected			Protected			Protected			Protected		
Rights:	Include			Include			Include			Include		
Min. Green:	0	0	0	0	0	0	0	0	0	0	0	0
Lanes:	1 0	0	1 0	1 0	1	0 1	1 0	2	1 0	1 0	2	1 0
Volume Module:												
Base Vol:	14	148	13	74	172	826	220	3209	25	28	2770	496
Growth Adj:	1.00	1.00	1.00	1.00	1.00	1.00	1.00	1.00	1.00	1.00	1.00	1.00
Initial Bse:	14	148	13	74	172	826	220	3209	25	28	2770	496
Added Vol:	0	0	0	0	0	0	0	0	0	0	0	0
PasserByVol:	0	0	0	0	0	0	0	0	0	0	0	0
Initial Fut:	14	148	13	74	172	826	220	3209	25	28	2770	496
User Adj:	1.00	1.00	1.00	1.00	1.00	1.00	1.00	1.00	1.00	1.00	1.00	1.00
PHF Adj:	1.00	1.00	1.00	1.00	1.00	1.00	1.00	1.00	1.00	1.00	1.00	1.00
PHF Volume:	14	148	13	74	172	826	220	3209	25	28	2770	496
Reduct Vol:	0	0	0	0	0	0	0	0	0	0	0	0
Reduced Vol:	14	148	13	74	172	826	220	3209	25	28	2770	496
PCE Adj:	1.00	1.00	1.00	1.00	1.00	1.00	1.00	1.00	1.00	1.00	1.00	1.00
MLF Adj:	1.00	1.00	1.00	1.00	1.00	1.00	1.00	1.00	1.00	1.00	1.00	1.00
FinalVolume:	14	148	13	74	172	826	220	3209	25	28	2770	496
Saturation Flow Module:												
Sat/Lane:	1900	1900	1900	1900	1900	1900	1900	1900	1900	1900	1900	1900
Adjustment:	0.95	0.99	0.99	0.95	1.00	0.85	0.95	0.91	0.91	0.95	0.89	0.89
Lanes:	1.00	0.92	0.08	1.00	1.00	1.00	1.00	2.98	0.02	1.00	2.54	0.46
Final Sat.:	1805	1726	152	1805	1900	1615	1805	5142	40	1805	4298	770
Capacity Analysis Module:												
Vol/Sat:	0.01	0.09	0.09	0.04	0.09	0.51	0.12	0.62	0.62	0.02	0.64	0.64
Crit Moves:	****					****	****				****	
Green/Cycle:	0.01	0.27	0.27	0.13	0.40	0.40	0.09	0.58	0.58	0.01	0.50	0.50
Volume/Cap:	1.29	0.31	0.31	0.31	0.23	1.29	1.29	1.07	1.07	1.07	1.29	1.29
Delay/Veh:	429.8	29.2	29.2	40.2	20.1	170.2	210.6	61.0	61.0	248.9	157	156.6
User DelAdj:	1.00	1.00	1.00	1.00	1.00	1.00	1.00	1.00	1.00	1.00	1.00	1.00
AdjDel/Veh:	429.8	29.2	29.2	40.2	20.1	170.2	210.6	61.0	61.0	248.9	157	156.6
LOS by Move:	F	C	C	D	C	F	F	E	E	F	F	F
HCM2kAvgQ:	2	4	4	2	3	50	15	51	51	3	70	70

Note: Queue reported is the number of cars per lane.

City of Murrieta General Plan
Future General Plan (Scenario B)
PM Peak Hour

Level Of Service Computation Report
2000 HCM Operations Method (Future Volume Alternative)

Intersection #61 I-215 SB Ramps & Scott Rd

Cycle (sec): 100 Critical Vol./Cap.(X): 0.377
Loss Time (sec): 0 (Y+R=4.0 sec) Average Delay (sec/veh): 8.2
Optimal Cycle: 37 Level Of Service: A

Street Name:	I-215 SB Ramps						Scott Rd					
Approach:	North Bound			South Bound			East Bound			West Bound		
Movement:	L	T	R	L	T	R	L	T	R	L	T	R
Control:	Protected			Protected			Protected			Protected		
Rights:	Include			Include			Ignore			Ignore		
Min. Green:	0	0	0	0	0	0	0	0	0	0	0	0
Lanes:	0 0	0	0 0	2 0	0	0 2	0 0	4	0 1	0 0	3	0 2
Volume Module:												
Base Vol:	0	0	0	160	0	259	0	756	412	0	1482	458
Growth Adj:	1.00	1.00	1.00	1.00	1.00	1.00	1.00	1.00	1.00	1.00	1.00	1.00
Initial Bse:	0	0	0	160	0	259	0	756	412	0	1482	458
Added Vol:	0	0	0	0	0	0	0	0	0	0	0	0
PasserByVol:	0	0	0	0	0	0	0	0	0	0	0	0
Initial Fut:	0	0	0	160	0	259	0	756	412	0	1482	458
User Adj:	1.00	1.00	1.00	1.00	1.00	1.00	1.00	1.00	0.00	1.00	1.00	0.00
PHF Adj:	1.00	1.00	1.00	1.00	1.00	1.00	1.00	1.00	0.00	1.00	1.00	0.00
PHF Volume:	0	0	0	160	0	259	0	756	0	0	1482	0
Reduct Vol:	0	0	0	0	0	0	0	0	0	0	0	0
Reduced Vol:	0	0	0	160	0	259	0	756	0	0	1482	0
PCE Adj:	1.00	1.00	1.00	1.00	1.00	1.00	1.00	1.00	0.00	1.00	1.00	0.00
MLF Adj:	1.00	1.00	1.00	1.00	1.00	1.00	1.00	1.00	0.00	1.00	1.00	0.00
FinalVolume:	0	0	0	160	0	259	0	756	0	0	1482	0
Saturation Flow Module:												
Sat/Lane:	1900	1900	1900	1900	1900	1900	1900	1900	1900	1900	1900	1900
Adjustment:	1.00	1.00	1.00	0.92	1.00	0.75	1.00	0.91	1.00	1.00	0.91	0.88
Lanes:	0.00	0.00	0.00	2.00	0.00	2.00	0.00	4.00	1.00	0.00	3.00	2.00
Final Sat.:	0	0	0	3502	0	2842	0	6916	1900	0	5187	3344
Capacity Analysis Module:												
Vol/Sat:	0.00	0.00	0.00	0.05	0.00	0.09	0.00	0.11	0.00	0.00	0.29	0.00
Crit Moves:						****	****				****	
Green/Cycle:	0.00	0.00	0.00	0.24	0.00	0.24	0.00	0.76	0.00	0.00	0.76	0.00
Volume/Cap:	0.00	0.00	0.00	0.19	0.00	0.38	0.00	0.14	0.00	0.00	0.38	0.00
Delay/Veh:	0.0	0.0	0.0	30.2	0.0	32.0	0.0	3.3	0.0	0.0	4.2	0.0
User DelAdj:	1.00	1.00	1.00	1.00	1.00	1.00	1.00	1.00	1.00	1.00	1.00	1.00
AdjDel/Veh:	0.0	0.0	0.0	30.2	0.0	32.0	0.0	3.3	0.0	0.0	4.2	0.0
LOS by Move:	A	A	A	C	A	C	A	A	A	A	A	A
HCM2kAvgQ:	0	0	0	2	0	4	0	2	0	0	6	0

Note: Queue reported is the number of cars per lane.

City of Murrieta General Plan
Future General Plan (Scenario B)
PM Peak Hour

Level Of Service Computation Report
2000 HCM Operations Method (Future Volume Alternative)

Intersection #62 I-215 NB Ramps & Scott Rd

Cycle (sec): 100 Critical Vol./Cap.(X): 0.567
Loss Time (sec): 0 (Y+R=4.0 sec) Average Delay (sec/veh): 16.0
Optimal Cycle: 53 Level Of Service: B

Street Name:	I-215 NB Ramps						Scott Rd					
Approach:	North Bound			South Bound			East Bound			West Bound		
Movement:	L	T	R	L	T	R	L	T	R	L	T	R
Control:	Protected			Protected			Protected			Protected		
Rights:	Include			Include			Include			Ovl		
Min. Green:	0	0	0	0	0	0	0	0	0	0	0	0
Lanes:	0 0	0	1 2	0 0	0	0 2	2 0	4	0 0	0 0	3	0 2
Volume Module:												
Base Vol:	0	7	896	0	0	400	93	1001	0	0	1708	382
Growth Adj:	1.00	1.00	1.00	1.00	1.00	1.00	1.00	1.00	1.00	1.00	1.00	1.00
Initial Bse:	0	7	896	0	0	400	93	1001	0	0	1708	382
Added Vol:	0	0	0	0	0	0	0	0	0	0	0	0
PasserByVol:	0	0	0	0	0	0	0	0	0	0	0	0
Initial Fut:	0	7	896	0	0	400	93	1001	0	0	1708	382
User Adj:	1.00	1.00	1.00	1.00	1.00	1.00	1.00	1.00	1.00	1.00	1.00	1.00
PHF Adj:	1.00	1.00	1.00	1.00	1.00	1.00	1.00	1.00	1.00	1.00	1.00	1.00
PHF Volume:	0	7	896	0	0	400	93	1001	0	0	1708	382
Reduct Vol:	0	0	0	0	0	0	0	0	0	0	0	0
Reduced Vol:	0	7	896	0	0	400	93	1001	0	0	1708	382
PCE Adj:	1.00	1.00	1.00	1.00	1.00	1.00	1.00	1.00	1.00	1.00	1.00	1.00
MLF Adj:	1.00	1.00	1.00	1.00	1.00	1.00	1.00	1.00	1.00	1.00	1.00	1.00
FinalVolume:	0	7	896	0	0	400	93	1001	0	0	1708	382
Saturation Flow Module:												
Sat/Lane:	1900	1900	1900	1900	1900	1900	1900	1900	1900	1900	1900	1900
Adjustment:	1.00	0.85	0.75	1.00	1.00	0.75	0.92	0.91	1.00	1.00	0.91	0.75
Lanes:	0.00	0.02	2.98	0.00	0.00	2.00	2.00	4.00	0.00	0.00	3.00	2.00
Final Sat.:	0	33	4239	0	0	2842	3502	6916	0	0	5187	2842
Capacity Analysis Module:												
Vol/Sat:	0.00	0.21	0.21	0.00	0.00	0.14	0.03	0.14	0.00	0.00	0.33	0.13
Crit Moves:		****		****			****				****	
Green/Cycle:	0.00	0.37	0.37	0.00	0.00	0.37	0.05	0.63	0.00	0.00	0.58	0.58
Volume/Cap:	0.00	0.57	0.57	0.00	0.00	0.38	0.57	0.23	0.00	0.00	0.57	0.23
Delay/Veh:	0.0	25.4	25.4	0.0	0.0	23.1	51.3	8.1	0.0	0.0	13.4	10.2
User DelAdj:	1.00	1.00	1.00	1.00	1.00	1.00	1.00	1.00	1.00	1.00	1.00	1.00
AdjDel/Veh:	0.0	25.4	25.4	0.0	0.0	23.1	51.3	8.1	0.0	0.0	13.4	10.2
LOS by Move:	A	C	C	A	A	C	D	A	A	A	B	B
HCM2kAvgQ:	0	9	9	0	0	5	2	4	0	0	12	3

Note: Queue reported is the number of cars per lane.

City of Murrieta General Plan
Future General Plan (Scenario B)
PM Peak Hour

Level Of Service Computation Report
2000 HCM Operations Method (Future Volume Alternative)

Intersection #102 Leon Road & Scott Road

Cycle (sec): 100 Critical Vol./Cap.(X): 0.937
Loss Time (sec): 0 (Y+R=4.0 sec) Average Delay (sec/veh): 43.0
Optimal Cycle: 180 Level Of Service: D

Street Name:	Leon Road						Scott Road					
Approach:	North Bound			South Bound			East Bound			West Bound		
Movement:	L -	T -	R	L -	T -	R	L -	T -	R	L -	T -	R
Control:	Protected			Protected			Protected			Protected		
Rights:	Include			Include			Include			Include		
Min. Green:	0	0	0	0	0	0	0	0	0	0	0	0
Lanes:	1 0	1 1	0	1 0	1 1	0	1 0	2 1	0	1 0	2 1	0
Volume Module:												
Base Vol:	547	394	18	64	226	357	545	528	541	5	402	164
Growth Adj:	1.00	1.00	1.00	1.00	1.00	1.00	1.00	1.00	1.00	1.00	1.00	1.00
Initial Bse:	547	394	18	64	226	357	545	528	541	5	402	164
Added Vol:	0	0	0	0	0	0	0	0	0	0	0	0
PasserByVol:	0	0	0	0	0	0	0	0	0	0	0	0
Initial Fut:	547	394	18	64	226	357	545	528	541	5	402	164
User Adj:	1.00	1.00	1.00	1.00	1.00	1.00	1.00	1.00	1.00	1.00	1.00	1.00
PHF Adj:	1.00	1.00	1.00	1.00	1.00	1.00	1.00	1.00	1.00	1.00	1.00	1.00
PHF Volume:	547	394	18	64	226	357	545	528	541	5	402	164
Reduct Vol:	0	0	0	0	0	0	0	0	0	0	0	0
Reduced Vol:	547	394	18	64	226	357	545	528	541	5	402	164
PCE Adj:	1.00	1.00	1.00	1.00	1.00	1.00	1.00	1.00	1.00	1.00	1.00	1.00
MLF Adj:	1.00	1.00	1.00	1.00	1.00	1.00	1.00	1.00	1.00	1.00	1.00	1.00
FinalVolume:	547	394	18	64	226	357	545	528	541	5	402	164
Saturation Flow Module:												
Sat/Lane:	1900	1900	1900	1900	1900	1900	1900	1900	1900	1900	1900	1900
Adjustment:	0.95	0.94	0.94	0.95	0.86	0.86	0.95	0.84	0.84	0.95	0.87	0.87
Lanes:	1.00	1.91	0.09	1.00	1.00	1.00	1.00	2.00	1.00	1.00	2.13	0.87
Final Sat.:	1805	3428	157	1805	1639	1639	1805	3195	1598	1805	3526	1438
Capacity Analysis Module:												
Vol/Sat:	0.30	0.11	0.11	0.04	0.14	0.22	0.30	0.17	0.34	0.00	0.11	0.11
Crit Moves:	****					****	****				****	
Green/Cycle:	0.32	0.42	0.42	0.13	0.23	0.23	0.32	0.44	0.44	0.00	0.12	0.12
Volume/Cap:	0.94	0.27	0.27	0.27	0.59	0.94	0.94	0.38	0.77	0.77	0.94	0.94
Delay/Veh:	55.6	18.8	18.8	39.8	35.1	59.5	55.8	18.8	26.3	250.1	65.8	65.8
User DelAdj:	1.00	1.00	1.00	1.00	1.00	1.00	1.00	1.00	1.00	1.00	1.00	1.00
AdjDel/Veh:	55.6	18.8	18.8	39.8	35.1	59.5	55.8	18.8	26.3	250.1	65.8	65.8
LOS by Move:	E	B	B	D	D	E	E	B	C	F	E	E
HCM2kAvgQ:	21	4	4	2	7	16	21	6	17	1	10	10

Note: Queue reported is the number of cars per lane.

City of Murrieta General Plan
Future General Plan (Scenario B)
PM Peak Hour

Level Of Service Computation Report
2000 HCM Operations Method (Future Volume Alternative)

Intersection #104 Antelope Road & Keller Road

Cycle (sec): 100 Critical Vol./Cap.(X): 0.932
Loss Time (sec): 0 (Y+R=4.0 sec) Average Delay (sec/veh): 48.0
Optimal Cycle: 180 Level Of Service: D

Street Name:	Antelope Road						Keller Road					
Approach:	North Bound			South Bound			East Bound			West Bound		
Movement:	L -	T -	R	L -	T -	R	L -	T -	R	L -	T -	R
Control:	Protected			Protected			Protected			Protected		
Rights:	Include			Include			Include			Include		
Min. Green:	0	0	0	0	0	0	0	0	0	0	0	0
Lanes:	2 0	2 0	1	1 0	2 0	1	2 0	3 0	1	1 0	3 0	1
Volume Module:												
Base Vol:	780	471	867	89	99	573	804	859	273	283	605	154
Growth Adj:	1.00	1.00	1.00	1.00	1.00	1.00	1.00	1.00	1.00	1.00	1.00	1.00
Initial Bse:	780	471	867	89	99	573	804	859	273	283	605	154
Added Vol:	0	0	0	0	0	0	0	0	0	0	0	0
PasserByVol:	0	0	0	0	0	0	0	0	0	0	0	0
Initial Fut:	780	471	867	89	99	573	804	859	273	283	605	154
User Adj:	1.00	1.00	1.00	1.00	1.00	1.00	1.00	1.00	1.00	1.00	1.00	1.00
PHF Adj:	1.00	1.00	1.00	1.00	1.00	1.00	1.00	1.00	1.00	1.00	1.00	1.00
PHF Volume:	780	471	867	89	99	573	804	859	273	283	605	154
Reduct Vol:	0	0	0	0	0	0	0	0	0	0	0	0
Reduced Vol:	780	471	867	89	99	573	804	859	273	283	605	154
PCE Adj:	1.00	1.00	1.00	1.00	1.00	1.00	1.00	1.00	1.00	1.00	1.00	1.00
MLF Adj:	1.00	1.00	1.00	1.00	1.00	1.00	1.00	1.00	1.00	1.00	1.00	1.00
FinalVolume:	780	471	867	89	99	573	804	859	273	283	605	154
Saturation Flow Module:												
Sat/Lane:	1900	1900	1900	1900	1900	1900	1900	1900	1900	1900	1900	1900
Adjustment:	0.92	0.95	0.85	0.95	0.95	0.85	0.92	0.91	0.85	0.95	0.91	0.85
Lanes:	2.00	2.00	1.00	1.00	2.00	1.00	2.00	3.00	1.00	1.00	3.00	1.00
Final Sat.:	3502	3610	1615	1805	3610	1615	3502	5187	1615	1805	5187	1615
Capacity Analysis Module:												
Vol/Sat:	0.22	0.13	0.54	0.05	0.03	0.35	0.23	0.17	0.17	0.16	0.12	0.10
Crit Moves:			****	****			****				****	
Green/Cycle:	0.24	0.58	0.58	0.05	0.39	0.39	0.25	0.19	0.19	0.18	0.13	0.13
Volume/Cap:	0.92	0.23	0.93	0.93	0.07	0.92	0.93	0.86	0.88	0.88	0.93	0.76
Delay/Veh:	51.7	10.4	35.1	117.3	19.4	48.0	53.5	46.7	62.6	62.7	63.7	57.9
User DelAdj:	1.00	1.00	1.00	1.00	1.00	1.00	1.00	1.00	1.00	1.00	1.00	1.00
AdjDel/Veh:	51.7	10.4	35.1	117.3	19.4	48.0	53.5	46.7	62.6	62.7	63.7	57.9
LOS by Move:	D	B	D	F	B	D	D	D	E	E	E	E
HCM2kAvgQ:	16	4	29	5	1	21	17	12	11	12	10	6

Note: Queue reported is the number of cars per lane.

City of Murrieta General Plan
Future General Plan (Scenario B)
PM Peak Hour

Level Of Service Computation Report
2000 HCM Operations Method (Future Volume Alternative)

Intersection #105 Menifee Road - Meadowlark Road & Keller Road

Cycle (sec): 100 Critical Vol./Cap.(X): 0.940
Loss Time (sec): 0 (Y+R=4.0 sec) Average Delay (sec/veh): 42.2
Optimal Cycle: 180 Level Of Service: D

Street Name:	Menifee Road - Meadowlark Road						Keller Road					
Approach:	North Bound			South Bound			East Bound			West Bound		
Movement:	L - T - R			L - T - R			L - T - R			L - T - R		
Control:	Protected			Protected			Protected			Protected		
Rights:	Include			Include			Include			Include		
Min. Green:	0	0	0	0	0	0	0	0	0	0	0	0
Lanes:	1 0	1	1 0	1 0	1	1 0	2 0	1	1 0	1 0	1	1 0
Volume Module:												
Base Vol:	130	887	732	104	735	369	819	364	482	198	414	141
Growth Adj:	1.00	1.00	1.00	1.00	1.00	1.00	1.00	1.00	1.00	1.00	1.00	1.00
Initial Bse:	130	887	732	104	735	369	819	364	482	198	414	141
Added Vol:	0	0	0	0	0	0	0	0	0	0	0	0
PasserByVol:	0	0	0	0	0	0	0	0	0	0	0	0
Initial Fut:	130	887	732	104	735	369	819	364	482	198	414	141
User Adj:	1.00	1.00	1.00	1.00	1.00	1.00	1.00	1.00	1.00	1.00	1.00	1.00
PHF Adj:	1.00	1.00	1.00	1.00	1.00	1.00	1.00	1.00	1.00	1.00	1.00	1.00
PHF Volume:	130	887	732	104	735	369	819	364	482	198	414	141
Reduct Vol:	0	0	0	0	0	0	0	0	0	0	0	0
Reduced Vol:	130	887	732	104	735	369	819	364	482	198	414	141
PCE Adj:	1.00	1.00	1.00	1.00	1.00	1.00	1.00	1.00	1.00	1.00	1.00	1.00
MLF Adj:	1.00	1.00	1.00	1.00	1.00	1.00	1.00	1.00	1.00	1.00	1.00	1.00
FinalVolume:	130	887	732	104	735	369	819	364	482	198	414	141
Saturation Flow Module:												
Sat/Lane:	1900	1900	1900	1900	1900	1900	1900	1900	1900	1900	1900	1900
Adjustment:	0.95	0.89	0.89	0.95	0.90	0.90	0.92	0.87	0.87	0.95	0.91	0.91
Lanes:	1.00	1.10	0.90	1.00	1.33	0.67	2.00	1.00	1.00	1.00	1.49	0.51
Final Sat.:	1805	1843	1521	1805	2283	1146	3502	1652	1652	1805	2591	882
Capacity Analysis Module:												
Vol/Sat:	0.07	0.48	0.48	0.06	0.32	0.32	0.23	0.22	0.29	0.11	0.16	0.16
Crit Moves:		****		****					****	****		
Green/Cycle:	0.10	0.51	0.51	0.06	0.47	0.47	0.25	0.31	0.31	0.12	0.17	0.17
Volume/Cap:	0.69	0.94	0.94	0.94	0.69	0.69	0.92	0.71	0.94	0.94	0.92	0.92
Delay/Veh:	53.3	33.6	33.6	113.4	22.1	22.1	51.1	32.5	50.9	89.2	60.5	60.5
User DelAdj:	1.00	1.00	1.00	1.00	1.00	1.00	1.00	1.00	1.00	1.00	1.00	1.00
AdjDel/Veh:	53.3	33.6	33.6	113.4	22.1	22.1	51.1	32.5	50.9	89.2	60.5	60.5
LOS by Move:	D	C	C	F	C	C	D	C	D	F	E	E
HCM2kAvgQ:	5	30	30	6	15	15	17	12	20	10	13	13

Note: Queue reported is the number of cars per lane.

City of Murrieta General Plan
Future General Plan (Scenario B)
PM Peak Hour

Level Of Service Computation Report
2000 HCM Operations Method (Future Volume Alternative)

Intersection #107 Leon Road & Keller Road

Cycle (sec): 100 Critical Vol./Cap.(X): 0.366
Loss Time (sec): 0 (Y+R=4.0 sec) Average Delay (sec/veh): 15.6
Optimal Cycle: 29 Level Of Service: B

Street Name:	Leon Road						Keller Road					
Approach:	North Bound			South Bound			East Bound			West Bound		
Movement:	L - T - R			L - T - R			L - T - R			L - T - R		
Control:	Protected			Permitted			Protected			Permitted		
Rights:	Include			Include			Include			Include		
Min. Green:	0	0	0	0	0	0	0	0	0	0	0	0
Lanes:	1 0	1	1 0	1 0	1	1 0	1 0	1	1 0	1 0	1	1 0
Volume Module:												
Base Vol:	64	899	1	0	740	83	83	56	279	18	190	3
Growth Adj:	1.00	1.00	1.00	1.00	1.00	1.00	1.00	1.00	1.00	1.00	1.00	1.00
Initial Bse:	64	899	1	0	740	83	83	56	279	18	190	3
Added Vol:	0	0	0	0	0	0	0	0	0	0	0	0
PasserByVol:	0	0	0	0	0	0	0	0	0	0	0	0
Initial Fut:	64	899	1	0	740	83	83	56	279	18	190	3
User Adj:	1.00	1.00	1.00	1.00	1.00	1.00	1.00	1.00	1.00	1.00	1.00	1.00
PHF Adj:	1.00	1.00	1.00	1.00	1.00	1.00	1.00	1.00	1.00	1.00	1.00	1.00
PHF Volume:	64	899	1	0	740	83	83	56	279	18	190	3
Reduct Vol:	0	0	0	0	0	0	0	0	0	0	0	0
Reduced Vol:	64	899	1	0	740	83	83	56	279	18	190	3
PCE Adj:	1.00	1.00	1.00	1.00	1.00	1.00	1.00	1.00	1.00	1.00	1.00	1.00
MLF Adj:	1.00	1.00	1.00	1.00	1.00	1.00	1.00	1.00	1.00	1.00	1.00	1.00
FinalVolume:	64	899	1	0	740	83	83	56	279	18	190	3
Saturation Flow Module:												
Sat/Lane:	1900	1900	1900	1900	1900	1900	1900	1900	1900	1900	1900	1900
Adjustment:	0.95	0.95	0.95	1.00	0.94	0.94	0.95	0.83	0.83	0.27	0.95	0.95
Lanes:	1.00	1.99	0.01	1.00	1.80	0.20	1.00	1.00	1.00	1.00	1.97	0.03
Final Sat.:	1805	3606	4	1900	3197	359	1805	1579	1579	521	3547	56
Capacity Analysis Module:												
Vol/Sat:	0.04	0.25	0.25	0.00	0.23	0.23	0.05	0.04	0.18	0.03	0.05	0.05
Crit Moves:	****				****		****				****	
Green/Cycle:	0.10	0.73	0.73	0.00	0.63	0.63	0.13	0.27	0.27	0.15	0.15	0.15
Volume/Cap:	0.37	0.34	0.34	0.00	0.37	0.37	0.37	0.13	0.65	0.24	0.37	0.37
Delay/Veh:	43.6	5.0	5.0	0.0	8.9	8.9	41.1	27.5	35.1	39.4	38.9	38.9
User DelAdj:	1.00	1.00	1.00	1.00	1.00	1.00	1.00	1.00	1.00	1.00	1.00	1.00
AdjDel/Veh:	43.6	5.0	5.0	0.0	8.9	8.9	41.1	27.5	35.1	39.4	38.9	38.9
LOS by Move:	D	A	A	A	A	A	D	C	D	D	D	D
HCM2kAvgQ:	2	5	5	0	6	6	3	1	9	1	3	3

Note: Queue reported is the number of cars per lane.

City of Murrieta General Plan
Future General Plan (Scenario B)
PM Peak Hour

Level Of Service Computation Report
2000 HCM Operations Method (Future Volume Alternative)

Intersection #108 Winchester Road - SR-79 & Keller Road

Cycle (sec): 100 | Critical Vol./Cap.(X): 0.542
Loss Time (sec): 0 (Y+R=4.0 sec) | Average Delay (sec/veh): 1.4
Optimal Cycle: 41 | Level Of Service: A

Street Name:	Winchester Road - SR-79						Keller Road					
Approach:	North Bound			South Bound			East Bound			West Bound		
Movement:	L -	T -	R	L -	T -	R	L -	T -	R	L -	T -	R
Control:	Protected			Protected			Permitted			Permitted		
Rights:	Include			Include			Include			Include		
Min. Green:	0	0	0	0	0	0	0	0	0	0	0	0
Lanes:	1 0	2 1	0	1 0	2 1	0	1 0	1 1	0	1 0	1 1	0
Volume Module:												
Base Vol:	1	2651	38	12	2124	1	1	33	1	11	17	26
Growth Adj:	1.00	1.00	1.00	1.00	1.00	1.00	1.00	1.00	1.00	1.00	1.00	1.00
Initial Bse:	1	2651	38	12	2124	1	1	33	1	11	17	26
Added Vol:	0	0	0	0	0	0	0	0	0	0	0	0
PasserByVol:	0	0	0	0	0	0	0	0	0	0	0	0
Initial Fut:	1	2651	38	12	2124	1	1	33	1	11	17	26
User Adj:	1.00	1.00	1.00	1.00	1.00	1.00	1.00	1.00	1.00	1.00	1.00	1.00
PHF Adj:	1.00	1.00	1.00	1.00	1.00	1.00	1.00	1.00	1.00	1.00	1.00	1.00
PHF Volume:	1	2651	38	12	2124	1	1	33	1	11	17	26
Reduct Vol:	0	0	0	0	0	0	0	0	0	0	0	0
Reduced Vol:	1	2651	38	12	2124	1	1	33	1	11	17	26
PCE Adj:	1.00	1.00	1.00	1.00	1.00	1.00	1.00	1.00	1.00	1.00	1.00	1.00
MLF Adj:	1.00	1.00	1.00	1.00	1.00	1.00	1.00	1.00	1.00	1.00	1.00	1.00
FinalVolume:	1	2651	38	12	2124	1	1	33	1	11	17	26
Saturation Flow Module:												
Sat/Lane:	1900	1900	1900	1900	1900	1900	1900	1900	1900	1900	1900	1900
Adjustment:	0.95	0.91	0.91	0.95	0.91	0.91	1.00	0.95	0.95	1.00	0.86	0.86
Lanes:	1.00	2.96	0.04	1.00	2.99	0.01	1.00	1.94	0.06	1.00	1.00	1.00
Final Sat.:	1805	5103	73	1805	5185	2	1900	3490	106	1900	1641	1641
Capacity Analysis Module:												
Vol/Sat:	0.00	0.52	0.52	0.01	0.41	0.41	0.00	0.01	0.01	0.01	0.01	0.02
Crit Moves:		****		****								****
Green/Cycle:	0.00	0.96	0.96	0.01	0.97	0.97	0.03	0.03	0.03	0.03	0.03	0.03
Volume/Cap:	0.42	0.54	0.54	0.54	0.42	0.42	0.01	0.32	0.32	0.15	0.35	0.54
Delay/Veh:	140.7	0.3	0.3	73.8	0.1	0.1	47.2	49.4	49.4	48.3	49.4	55.3
User DelAdj:	1.00	1.00	1.00	1.00	1.00	1.00	1.00	1.00	1.00	1.00	1.00	1.00
AdjDel/Veh:	140.7	0.3	0.3	73.8	0.1	0.1	47.2	49.4	49.4	48.3	49.4	55.3
LOS by Move:	F	A	A	E	A	A	D	D	D	D	D	E
HCM2kAvgQ:	0	4	4	1	2	2	0	1	1	0	1	2

Note: Queue reported is the number of cars per lane.

City of Murrieta General Plan
Future General Plan (Scenario B)
PM Peak Hour

Level Of Service Computation Report
2000 HCM Operations Method (Future Volume Alternative)

Intersection #112 Leon Road & Jean Nicholas

Cycle (sec): 100 | Critical Vol./Cap.(X): 0.697
Loss Time (sec): 0 (Y+R=4.0 sec) | Average Delay (sec/veh): 26.4
Optimal Cycle: 75 | Level Of Service: C

Street Name:	Leon Road						Jean Nicholas					
Approach:	North Bound			South Bound			East Bound			West Bound		
Movement:	L -	T -	R	L -	T -	R	L -	T -	R	L -	T -	R
Control:	Protected			Protected			Protected			Protected		
Rights:	Include			Include			Include			Include		
Min. Green:	0	0	0	0	0	0	0	0	0	0	0	0
Lanes:	1 0	1 1	0	1 0	1 1	0	1 0	1 1	0	1 0	1 1	0
Volume Module:												
Base Vol:	3	519	263	354	572	13	2	129	11	108	143	435
Growth Adj:	1.00	1.00	1.00	1.00	1.00	1.00	1.00	1.00	1.00	1.00	1.00	1.00
Initial Bse:	3	519	263	354	572	13	2	129	11	108	143	435
Added Vol:	0	0	0	0	0	0	0	0	0	0	0	0
PasserByVol:	0	0	0	0	0	0	0	0	0	0	0	0
Initial Fut:	3	519	263	354	572	13	2	129	11	108	143	435
User Adj:	1.00	1.00	1.00	1.00	1.00	1.00	1.00	1.00	1.00	1.00	1.00	1.00
PHF Adj:	1.00	1.00	1.00	1.00	1.00	1.00	1.00	1.00	1.00	1.00	1.00	1.00
PHF Volume:	3	519	263	354	572	13	2	129	11	108	143	435
Reduct Vol:	0	0	0	0	0	0	0	0	0	0	0	0
Reduced Vol:	3	519	263	354	572	13	2	129	11	108	143	435
PCE Adj:	1.00	1.00	1.00	1.00	1.00	1.00	1.00	1.00	1.00	1.00	1.00	1.00
MLF Adj:	1.00	1.00	1.00	1.00	1.00	1.00	1.00	1.00	1.00	1.00	1.00	1.00
FinalVolume:	3	519	263	354	572	13	2	129	11	108	143	435
Saturation Flow Module:												
Sat/Lane:	1900	1900	1900	1900	1900	1900	1900	1900	1900	1900	1900	1900
Adjustment:	0.95	0.90	0.90	0.95	0.95	0.95	0.95	0.94	0.94	0.95	0.84	0.84
Lanes:	1.00	1.33	0.67	1.00	1.96	0.04	1.00	1.84	0.16	1.00	1.00	1.00
Final Sat.:	1805	2276	1153	1805	3519	80	1805	3286	280	1805	1601	1601
Capacity Analysis Module:												
Vol/Sat:	0.00	0.23	0.23	0.20	0.16	0.16	0.00	0.04	0.04	0.06	0.09	0.27
Crit Moves:		****		****			****					****
Green/Cycle:	0.01	0.33	0.33	0.28	0.60	0.60	0.00	0.16	0.16	0.24	0.39	0.39
Volume/Cap:	0.27	0.70	0.70	0.70	0.27	0.27	0.70	0.25	0.25	0.25	0.23	0.70
Delay/Veh:	62.1	31.3	31.3	36.3	9.5	9.5	313.3	37.4	37.4	31.3	20.5	28.2
User DelAdj:	1.00	1.00	1.00	1.00	1.00	1.00	1.00	1.00	1.00	1.00	1.00	1.00
AdjDel/Veh:	62.1	31.3	31.3	36.3	9.5	9.5	313.3	37.4	37.4	31.3	20.5	28.2
LOS by Move:	E	C	C	D	A	A	F	D	D	C	C	C
HCM2kAvgQ:	0	12	12	11	4	4	1	2	2	3	3	13

Note: Queue reported is the number of cars per lane.

City of Murrieta General Plan
Future General Plan (Scenario B)
PM Peak Hour

Level Of Service Computation Report
2000 HCM Operations Method (Future Volume Alternative)

Intersection #122 Meadowlark Lane - Whitewood Road & Clinton Keith Road

Cycle (sec): 100 | Critical Vol./Cap.(X): 1.482
Loss Time (sec): 0 (Y+R=4.0 sec) | Average Delay (sec/veh): 137.7
Optimal Cycle: 180 | Level Of Service: F

Street Name:	Meadowlark Lane - Whitewood Road						Clinton Keith Road					
Approach:	North Bound			South Bound			East Bound			West Bound		
Movement:	L -	T -	R	L -	T -	R	L -	T -	R	L -	T -	R
Control:	Protected			Protected			Protected			Protected		
Rights:	Include			Include			Include			Include		
Min. Green:	0	0	0	0	0	0	0	0	0	0	0	0
Lanes:	2 0	2 0	1	2 0	1 1	0	2 0	3 0	1	2 0	3 0	1
Volume Module:												
Base Vol:	811	401	576	638	377	673	385	1305	501	324	727	1175
Growth Adj:	1.00	1.00	1.00	1.00	1.00	1.00	1.00	1.00	1.00	1.00	1.00	1.00
Initial Bse:	811	401	576	638	377	673	385	1305	501	324	727	1175
Added Vol:	0	0	0	0	0	0	0	0	0	0	0	0
PasserByVol:	0	0	0	0	0	0	0	0	0	0	0	0
Initial Fut:	811	401	576	638	377	673	385	1305	501	324	727	1175
User Adj:	1.00	1.00	1.00	1.00	1.00	1.00	1.00	1.00	1.00	1.00	1.00	1.00
PHF Adj:	1.00	1.00	1.00	1.00	1.00	1.00	1.00	1.00	1.00	1.00	1.00	1.00
PHF Volume:	811	401	576	638	377	673	385	1305	501	324	727	1175
Reduct Vol:	0	0	0	0	0	0	0	0	0	0	0	0
Reduced Vol:	811	401	576	638	377	673	385	1305	501	324	727	1175
PCE Adj:	1.00	1.00	1.00	1.00	1.00	1.00	1.00	1.00	1.00	1.00	1.00	1.00
MLF Adj:	1.00	1.00	1.00	1.00	1.00	1.00	1.00	1.00	1.00	1.00	1.00	1.00
FinalVolume:	811	401	576	638	377	673	385	1305	501	324	727	1175
Saturation Flow Module:												
Sat/Lane:	1900	1900	1900	1900	1900	1900	1900	1900	1900	1900	1900	1900
Adjustment:	0.92	0.95	0.85	0.92	0.86	0.86	0.92	0.91	0.85	0.92	0.91	0.85
Lanes:	2.00	2.00	1.00	2.00	1.00	1.00	2.00	3.00	1.00	2.00	3.00	1.00
Final Sat.:	3502	3610	1615	3502	1632	1632	3502	5187	1615	3502	5187	1615
Capacity Analysis Module:												
Vol/Sat:	0.23	0.11	0.36	0.18	0.23	0.41	0.11	0.25	0.31	0.09	0.14	0.73
Crit Moves:	****					****	****					****
Green/Cycle:	0.16	0.29	0.29	0.15	0.28	0.28	0.07	0.44	0.44	0.13	0.49	0.49
Volume/Cap:	1.48	0.39	1.24	1.24	0.83	1.48	1.48	0.58	0.71	0.71	0.29	1.48
Delay/Veh:	268.6	28.8	160.7	166.2	38.6	260.3	282.5	21.7	26.5	47.0	15.1	248.9
User DelAdj:	1.00	1.00	1.00	1.00	1.00	1.00	1.00	1.00	1.00	1.00	1.00	1.00
AdjDel/Veh:	268.6	28.8	160.7	166.2	38.6	260.3	282.5	21.7	26.5	47.0	15.1	248.9
LOS by Move:	F	C	F	F	D	F	F	C	C	D	B	F
HCM2kAvgQ:	31	5	34	21	14	51	16	11	14	6	5	83

Note: Queue reported is the number of cars per lane.

City of Murrieta General Plan
Future General Plan (Scenario B)
PM Peak Hour

Level Of Service Computation Report
2000 HCM Operations Method (Future Volume Alternative)

Intersection #138 Jefferson Avenue & Cherry Street

Cycle (sec): 100 | Critical Vol./Cap.(X): 1.029
Loss Time (sec): 0 (Y+R=4.0 sec) | Average Delay (sec/veh): 37.5
Optimal Cycle: 180 | Level Of Service: D

Street Name:	Jefferson Avenue						Cherry Street					
Approach:	North Bound			South Bound			East Bound			West Bound		
Movement:	L -	T -	R	L -	T -	R	L -	T -	R	L -	T -	R
Control:	Protected			Protected			Protected			Protected		
Rights:	Include			Include			Include			Include		
Min. Green:	0	0	0	0	0	0	0	0	0	0	0	0
Lanes:	1 0	2 0	1	1 0	1 1	0	1 0	2 1	0	1 0	2 1	0
Volume Module:												
Base Vol:	32	1267	821	210	888	7	2	1073	39	111	816	651
Growth Adj:	1.00	1.00	1.00	1.00	1.00	1.00	1.00	1.00	1.00	1.00	1.00	1.00
Initial Bse:	32	1267	821	210	888	7	2	1073	39	111	816	651
Added Vol:	0	0	0	0	0	0	0	0	0	0	0	0
PasserByVol:	0	0	0	0	0	0	0	0	0	0	0	0
Initial Fut:	32	1267	821	210	888	7	2	1073	39	111	816	651
User Adj:	1.00	1.00	1.00	1.00	1.00	1.00	1.00	1.00	1.00	1.00	1.00	1.00
PHF Adj:	1.00	1.00	1.00	1.00	1.00	1.00	1.00	1.00	1.00	1.00	1.00	1.00
PHF Volume:	32	1267	821	210	888	7	2	1073	39	111	816	651
Reduct Vol:	0	0	0	0	0	0	0	0	0	0	0	0
Reduced Vol:	32	1267	821	210	888	7	2	1073	39	111	816	651
PCE Adj:	1.00	1.00	1.00	1.00	1.00	1.00	1.00	1.00	1.00	1.00	1.00	1.00
MLF Adj:	1.00	1.00	1.00	1.00	1.00	1.00	1.00	1.00	1.00	1.00	1.00	1.00
FinalVolume:	32	1267	821	210	888	7	2	1073	39	111	816	651
Saturation Flow Module:												
Sat/Lane:	1900	1900	1900	1900	1900	1900	1900	1900	1900	1900	1900	1900
Adjustment:	0.95	0.95	0.85	0.95	0.95	0.95	0.95	0.91	0.91	0.95	0.85	0.85
Lanes:	1.00	2.00	1.00	1.00	1.98	0.02	1.00	2.89	0.11	1.00	2.00	1.00
Final Sat.:	1805	3610	1615	1805	3578	28	1805	4980	181	1805	3226	1613
Capacity Analysis Module:												
Vol/Sat:	0.02	0.35	0.51	0.12	0.25	0.25	0.00	0.22	0.22	0.06	0.25	0.40
Crit Moves:			****	****			****					****
Green/Cycle:	0.04	0.49	0.49	0.11	0.57	0.57	0.00	0.31	0.31	0.09	0.39	0.39
Volume/Cap:	0.44	0.71	1.03	1.03	0.44	0.44	1.03	0.70	0.70	0.70	0.65	1.03
Delay/Veh:	51.0	21.1	64.9	115.2	12.7	12.7	711.7	32.2	32.2	57.9	25.4	62.1
User DelAdj:	1.00	1.00	1.00	1.00	1.00	1.00	1.00	1.00	1.00	1.00	1.00	1.00
AdjDel/Veh:	51.0	21.1	64.9	115.2	12.7	12.7	711.7	32.2	32.2	57.9	25.4	62.1
LOS by Move:	D	C	E	F	B	B	F	C	C	E	C	E
HCM2kAvgQ:	2	17	35	11	8	8	1	12	12	5	12	31

Note: Queue reported is the number of cars per lane.

City of Murrieta General Plan
Future General Plan (Scenario B)
PM Peak Hour

Level Of Service Computation Report
2000 HCM Operations Method (Future Volume Alternative)

Intersection #141 Jefferson Ave & Nutmeg St

Cycle (sec): 100 | Critical Vol./Cap.(X): 0.899
Loss Time (sec): 0 (Y+R=4.0 sec) | Average Delay (sec/veh): 35.1
Optimal Cycle: 180 | Level Of Service: D

Street Name:	Jefferson Ave						Nutmeg St					
Approach:	North Bound			South Bound			East Bound			West Bound		
Movement:	L	T	R	L	T	R	L	T	R	L	T	R
Control:	Protected			Protected			Protected			Protected		
Rights:	Include			Include			Include			Include		
Min. Green:	0	0	0	0	0	0	0	0	0	0	0	0
Lanes:	1 0	2 1	0	1 0	2 1	0	1 0	1 1	0	1 0	1 1	0
Volume Module:												
Base Vol:	612	1204	389	108	1190	97	59	133	245	286	206	136
Growth Adj:	1.00	1.00	1.00	1.00	1.00	1.00	1.00	1.00	1.00	1.00	1.00	1.00
Initial Bse:	612	1204	389	108	1190	97	59	133	245	286	206	136
Added Vol:	0	0	0	0	0	0	0	0	0	0	0	0
PasserByVol:	0	0	0	0	0	0	0	0	0	0	0	0
Initial Fut:	612	1204	389	108	1190	97	59	133	245	286	206	136
User Adj:	1.00	1.00	1.00	1.00	1.00	1.00	1.00	1.00	1.00	1.00	1.00	1.00
PHF Adj:	1.00	1.00	1.00	1.00	1.00	1.00	1.00	1.00	1.00	1.00	1.00	1.00
PHF Volume:	612	1204	389	108	1190	97	59	133	245	286	206	136
Reduct Vol:	0	0	0	0	0	0	0	0	0	0	0	0
Reduced Vol:	612	1204	389	108	1190	97	59	133	245	286	206	136
PCE Adj:	1.00	1.00	1.00	1.00	1.00	1.00	1.00	1.00	1.00	1.00	1.00	1.00
MLF Adj:	1.00	1.00	1.00	1.00	1.00	1.00	1.00	1.00	1.00	1.00	1.00	1.00
FinalVolume:	612	1204	389	108	1190	97	59	133	245	286	206	136
Saturation Flow Module:												
Sat/Lane:	1900	1900	1900	1900	1900	1900	1900	1900	1900	1900	1900	1900
Adjustment:	0.95	0.88	0.88	0.95	0.90	0.90	0.95	0.86	0.86	0.95	0.89	0.89
Lanes:	1.00	2.27	0.73	1.00	2.77	0.23	1.00	1.00	1.00	1.00	1.20	0.80
Final Sat.:	1805	3775	1220	1805	4743	387	1805	1630	1630	1805	2044	1349
Capacity Analysis Module:												
Vol/Sat:	0.34	0.32	0.32	0.06	0.25	0.25	0.03	0.08	0.15	0.16	0.10	0.10
Crit Moves:	****				****				****	****		
Green/Cycle:	0.38	0.55	0.55	0.10	0.28	0.28	0.08	0.17	0.17	0.18	0.26	0.26
Volume/Cap:	0.90	0.58	0.58	0.58	0.90	0.90	0.39	0.49	0.90	0.90	0.39	0.39
Delay/Veh:	44.2	15.0	15.0	47.1	42.6	42.6	45.0	38.2	62.4	66.9	30.8	30.8
User DelAdj:	1.00	1.00	1.00	1.00	1.00	1.00	1.00	1.00	1.00	1.00	1.00	1.00
AdjDel/Veh:	44.2	15.0	15.0	47.1	42.6	42.6	45.0	38.2	62.4	66.9	30.8	30.8
LOS by Move:	D	B	B	D	D	D	D	D	E	E	C	C
HCM2kAvgQ:	21	12	12	4	18	18	2	4	11	12	5	5

Note: Queue reported is the number of cars per lane.

City of Murrieta General Plan
Future General Plan (Scenario B)
PM Peak Hour

Level Of Service Computation Report
2000 HCM Operations Method (Future Volume Alternative)

Intersection #142 Jefferson Ave & Magnolia St

Cycle (sec): 100 | Critical Vol./Cap.(X): 0.502
Loss Time (sec): 0 (Y+R=4.0 sec) | Average Delay (sec/veh): 9.0
Optimal Cycle: 46 | Level Of Service: A

Street Name:	Jefferson Ave						Magnolia St					
Approach:	North Bound			South Bound			East Bound			West Bound		
Movement:	L	T	R	L	T	R	L	T	R	L	T	R
Control:	Protected			Protected			Protected			Protected		
Rights:	Include			Include			Include			Include		
Min. Green:	0	0	0	0	0	0	0	0	0	0	0	0
Lanes:	1 0	2 1	0	1 0	2 1	0	1 0	0 1	0	1 0	0 1	0
Volume Module:												
Base Vol:	141	2078	12	10	1589	109	148	5	52	7	5	14
Growth Adj:	1.00	1.00	1.00	1.00	1.00	1.00	1.00	1.00	1.00	1.00	1.00	1.00
Initial Bse:	141	2078	12	10	1589	109	148	5	52	7	5	14
Added Vol:	0	0	0	0	0	0	0	0	0	0	0	0
PasserByVol:	0	0	0	0	0	0	0	0	0	0	0	0
Initial Fut:	141	2078	12	10	1589	109	148	5	52	7	5	14
User Adj:	1.00	1.00	1.00	1.00	1.00	1.00	1.00	1.00	1.00	1.00	1.00	1.00
PHF Adj:	1.00	1.00	1.00	1.00	1.00	1.00	1.00	1.00	1.00	1.00	1.00	1.00
PHF Volume:	141	2078	12	10	1589	109	148	5	52	7	5	14
Reduct Vol:	0	0	0	0	0	0	0	0	0	0	0	0
Reduced Vol:	141	2078	12	10	1589	109	148	5	52	7	5	14
PCE Adj:	1.00	1.00	1.00	1.00	1.00	1.00	1.00	1.00	1.00	1.00	1.00	1.00
MLF Adj:	1.00	1.00	1.00	1.00	1.00	1.00	1.00	1.00	1.00	1.00	1.00	1.00
FinalVolume:	141	2078	12	10	1589	109	148	5	52	7	5	14
Saturation Flow Module:												
Sat/Lane:	1900	1900	1900	1900	1900	1900	1900	1900	1900	1900	1900	1900
Adjustment:	0.95	0.91	0.91	0.95	0.90	0.90	0.95	0.86	0.86	0.95	0.89	0.89
Lanes:	1.00	2.98	0.02	1.00	2.81	0.19	1.00	0.09	0.91	1.00	0.26	0.74
Final Sat.:	1805	5152	30	1805	4805	330	1805	144	1496	1805	445	1245
Capacity Analysis Module:												
Vol/Sat:	0.08	0.40	0.40	0.01	0.33	0.33	0.08	0.03	0.03	0.00	0.01	0.01
Crit Moves:	****				****		****				****	
Green/Cycle:	0.16	0.80	0.80	0.01	0.66	0.66	0.16	0.17	0.17	0.02	0.02	0.02
Volume/Cap:	0.50	0.50	0.50	0.50	0.50	0.50	0.50	0.21	0.21	0.21	0.50	0.50
Delay/Veh:	40.1	3.3	3.3	68.0	8.8	8.8	39.5	36.3	36.3	51.4	58.6	58.6
User DelAdj:	1.00	1.00	1.00	1.00	1.00	1.00	1.00	1.00	1.00	1.00	1.00	1.00
AdjDel/Veh:	40.1	3.3	3.3	68.0	8.8	8.8	39.5	36.3	36.3	51.4	58.6	58.6
LOS by Move:	D	A	A	E	A	A	D	D	D	D	E	E
HCM2kAvgQ:	5	8	8	1	10	10	5	2	2	0	1	1

Note: Queue reported is the number of cars per lane.

City of Murrieta General Plan
Future General Plan (Scenario B)
PM Peak Hour

Level Of Service Computation Report
2000 HCM Operations Method (Future Volume Alternative)

Intersection #149 Monroe Ave & Murrieta Hot Springs Rd

Cycle (sec): 100 | Critical Vol./Cap.(X): 0.568
Loss Time (sec): 0 (Y+R=4.0 sec) | Average Delay (sec/veh): 16.4
Optimal Cycle: 53 | Level Of Service: B

Street Name:	Monroe Ave						Murrieta Hot Springs Rd					
Approach:	North Bound			South Bound			East Bound			West Bound		
Movement:	L	T	R	L	T	R	L	T	R	L	T	R
Control:	Protected			Protected			Protected			Protected		
Rights:	Include			Ovl			Ovl			Include		
Min. Green:	0	0	0	0	0	0	0	0	0	0	0	0
Lanes:	1 0	2 0	1	1 0	2 0	1	1 0	4 0	1	1 0	3 1	0
Volume Module:												
Base Vol:	178	240	200	1	250	117	170	2625	154	37	2083	27
Growth Adj:	1.00	1.00	1.00	1.00	1.00	1.00	1.00	1.00	1.00	1.00	1.00	1.00
Initial Bse:	178	240	200	1	250	117	170	2625	154	37	2083	27
Added Vol:	0	0	0	0	0	0	0	0	0	0	0	0
PasserByVol:	0	0	0	0	0	0	0	0	0	0	0	0
Initial Fut:	178	240	200	1	250	117	170	2625	154	37	2083	27
User Adj:	1.00	1.00	1.00	1.00	1.00	1.00	1.00	1.00	1.00	1.00	1.00	1.00
PHF Adj:	1.00	1.00	1.00	1.00	1.00	1.00	1.00	1.00	1.00	1.00	1.00	1.00
PHF Volume:	178	240	200	1	250	117	170	2625	154	37	2083	27
Reduct Vol:	0	0	0	0	0	0	0	0	0	0	0	0
Reduced Vol:	178	240	200	1	250	117	170	2625	154	37	2083	27
PCE Adj:	1.00	1.00	1.00	1.00	1.00	1.00	1.00	1.00	1.00	1.00	1.00	1.00
MLF Adj:	1.00	1.00	1.00	1.00	1.00	1.00	1.00	1.00	1.00	1.00	1.00	1.00
FinalVolume:	178	240	200	1	250	117	170	2625	154	37	2083	27
Saturation Flow Module:												
Sat/Lane:	1900	1900	1900	1900	1900	1900	1900	1900	1900	1900	1900	1900
Adjustment:	0.95	0.95	0.85	0.95	0.95	0.85	0.95	0.91	0.85	0.95	0.91	0.91
Lanes:	1.00	2.00	1.00	1.00	2.00	1.00	1.00	4.00	1.00	1.00	3.95	0.05
Final Sat.:	1805	3610	1615	1805	3610	1615	1805	6916	1615	1805	6814	88
Capacity Analysis Module:												
Vol/Sat:	0.10	0.07	0.12	0.00	0.07	0.07	0.09	0.38	0.10	0.02	0.31	0.31
Crit Moves:	****				****		****				****	
Green/Cycle:	0.17	0.29	0.29	0.00	0.12	0.29	0.17	0.67	0.84	0.04	0.54	0.54
Volume/Cap:	0.57	0.23	0.42	0.42	0.57	0.25	0.57	0.57	0.11	0.57	0.57	0.57
Delay/Veh:	40.3	26.8	29.0	139.9	43.2	27.6	41.0	9.0	1.4	58.7	15.6	15.6
User DelAdj:	1.00	1.00	1.00	1.00	1.00	1.00	1.00	1.00	1.00	1.00	1.00	1.00
AdjDel/Veh:	40.3	26.8	29.0	139.9	43.2	27.6	41.0	9.0	1.4	58.7	15.6	15.6
LOS by Move:	D	C	C	F	D	C	D	A	A	E	B	B
HCM2kAvgQ:	6	3	5	0	5	3	6	12	1	2	12	12

Note: Queue reported is the number of cars per lane.

City of Murrieta General Plan
Future General Plan (Scenario B)
PM Peak Hour

Level Of Service Computation Report
2000 HCM Operations Method (Future Volume Alternative)

Intersection #158 Adams Ave & Guava St

Cycle (sec): 100 | Critical Vol./Cap.(X): 0.374
Loss Time (sec): 0 (Y+R=4.0 sec) | Average Delay (sec/veh): 14.6
Optimal Cycle: 23 | Level Of Service: B

Street Name:	Adams Ave						Guava St					
Approach:	North Bound			South Bound			East Bound			West Bound		
Movement:	L	T	R	L	T	R	L	T	R	L	T	R
Control:	Permitted			Permitted			Permitted			Permitted		
Rights:	Include			Include			Include			Include		
Min. Green:	0	0	0	0	0	0	0	0	0	0	0	0
Lanes:	1 0	1 1	0	1 0	1 1	0	1 0	0 1	0	1 0	0 1	0
Volume Module:												
Base Vol:	39	241	31	95	42	208	58	243	188	8	253	162
Growth Adj:	1.00	1.00	1.00	1.00	1.00	1.00	1.00	1.00	1.00	1.00	1.00	1.00
Initial Bse:	39	241	31	95	42	208	58	243	188	8	253	162
Added Vol:	0	0	0	0	0	0	0	0	0	0	0	0
PasserByVol:	0	0	0	0	0	0	0	0	0	0	0	0
Initial Fut:	39	241	31	95	42	208	58	243	188	8	253	162
User Adj:	1.00	1.00	1.00	1.00	1.00	1.00	1.00	1.00	1.00	1.00	1.00	1.00
PHF Adj:	1.00	1.00	1.00	1.00	1.00	1.00	1.00	1.00	1.00	1.00	1.00	1.00
PHF Volume:	39	241	31	95	42	208	58	243	188	8	253	162
Reduct Vol:	0	0	0	0	0	0	0	0	0	0	0	0
Reduced Vol:	39	241	31	95	42	208	58	243	188	8	253	162
PCE Adj:	1.00	1.00	1.00	1.00	1.00	1.00	1.00	1.00	1.00	1.00	1.00	1.00
MLF Adj:	1.00	1.00	1.00	1.00	1.00	1.00	1.00	1.00	1.00	1.00	1.00	1.00
FinalVolume:	39	241	31	95	42	208	58	243	188	8	253	162
Saturation Flow Module:												
Sat/Lane:	1900	1900	1900	1900	1900	1900	1900	1900	1900	1900	1900	1900
Adjustment:	0.50	0.93	0.93	0.49	0.83	0.83	0.43	0.94	0.94	0.42	0.94	0.94
Lanes:	1.00	1.77	0.23	1.00	1.00	1.00	1.00	0.56	0.44	1.00	0.61	0.39
Final Sat.:	958	3144	404	923	1579	1579	825	1002	775	804	1091	699
Capacity Analysis Module:												
Vol/Sat:	0.04	0.08	0.08	0.10	0.03	0.13	0.07	0.24	0.24	0.01	0.23	0.23
Crit Moves:						****		****				
Green/Cycle:	0.35	0.35	0.35	0.35	0.35	0.35	0.65	0.65	0.65	0.65	0.65	0.65
Volume/Cap:	0.12	0.22	0.22	0.29	0.08	0.37	0.11	0.37	0.37	0.02	0.36	0.36
Delay/Veh:	22.1	22.8	22.8	23.9	21.6	24.5	6.7	8.4	8.4	6.3	8.2	8.2
User DelAdj:	1.00	1.00	1.00	1.00	1.00	1.00	1.00	1.00	1.00	1.00	1.00	1.00
AdjDel/Veh:	22.1	22.8	22.8	23.9	21.6	24.5	6.7	8.4	8.4	6.3	8.2	8.2
LOS by Move:	C	C	C	C	C	C	A	A	A	A	A	A
HCM2kAvgQ:	1	3	3	2	1	5	1	6	6	0	6	6

Note: Queue reported is the number of cars per lane.

ENHANCED GEOMETRICS

City of Murrieta General Plan
Future Proposed General Plan
AM Peak Hour

Scenario Report

Scenario:	Future Proposed GP AM
Command:	Future Proposed GP AM
Volume:	Future Proposed GP AM
Geometry:	Future
Impact Fee:	Default Impact Fee
Trip Generation:	Default Trip Generation
Trip Distribution:	Default Trip Distribution
Paths:	Default Path
Routes:	Default Route
Configuration:	Future Proposed GP AM

City of Murrieta General Plan
Future Proposed General Plan
AM Peak Hour

Turning Movement Report

Volume	Northbound			Southbound			Eastbound			Westbound			Total
Type	Left	Thru	Right	Left	Thru	Right	Left	Thru	Right	Left	Thru	Right	Volume
#1 Menifee Road & Scott Road													
Base	238	358	374	253	845	93	102	510	316	864	479	251	4683
Added	0	0	0	0	0	0	0	0	0	0	0	0	0
Total	238	358	374	253	845	93	102	510	316	864	479	251	4683
#2 Leon Road & Scott Road													
Base	0	0	0	0	0	0	0	0	0	0	0	0	0
Added	0	0	0	0	0	0	0	0	0	0	0	0	0
Total	0	0	0	0	0	0	0	0	0	0	0	0	0
#3 Winchester Road/SR-79 & Scott Road													
Base	110	1376	51	951	2658	75	117	178	68	17	151	963	6715
Added	0	0	0	0	0	0	0	0	0	0	0	0	0
Total	110	1376	51	951	2658	75	117	178	68	17	151	963	6715
#4 Antelope Road & Keller Road													
Base	0	0	0	0	0	0	0	0	0	0	0	0	0
Added	0	0	0	0	0	0	0	0	0	0	0	0	0
Total	0	0	0	0	0	0	0	0	0	0	0	0	0
#5 Menifee Road - Meadowlark Road & Keller Road													
Base	0	0	0	0	0	0	0	0	0	0	0	0	0
Added	0	0	0	0	0	0	0	0	0	0	0	0	0
Total	0	0	0	0	0	0	0	0	0	0	0	0	0
#6 Briggs Road & Keller Road													
Base	346	17	53	0	40	47	1	72	492	15	344	1	1428
Added	0	0	0	0	0	0	0	0	0	0	0	0	0
Total	346	17	53	0	40	47	1	72	492	15	344	1	1428
#7 Leon Road & Keller Road													
Base	0	0	0	0	0	0	0	0	0	0	0	0	0
Added	0	0	0	0	0	0	0	0	0	0	0	0	0
Total	0	0	0	0	0	0	0	0	0	0	0	0	0
#8 Winchester Road - SR-79 & Keller Road													
Base	0	0	0	0	0	0	0	0	0	0	0	0	0
Added	0	0	0	0	0	0	0	0	0	0	0	0	0
Total	0	0	0	0	0	0	0	0	0	0	0	0	0
#9 Antelope Road & Golden City Drive - Baxter Road													
Base	1	88	515	381	1070	27	1	75	11	397	203	604	3373
Added	0	0	0	0	0	0	0	0	0	0	0	0	0
Total	1	88	515	381	1070	27	1	75	11	397	203	604	3373

City of Murrieta General Plan
Future Proposed General Plan
AM Peak Hour

Volume Type	Northbound Left	Northbound Thru	Northbound Right	Southbound Left	Southbound Thru	Southbound Right	Eastbound Left	Eastbound Thru	Eastbound Right	Westbound Left	Westbound Thru	Westbound Right	Total Volume
#10 Whitewood Roa - /Meadowlark Road & Golden City Drive - Baxter Road													
Base	316	689	2	0	955	880	59	4	739	1	15	2	3662
Added	0	0	0	0	0	0	0	0	0	0	0	0	0
Total	316	689	2	0	955	880	59	4	739	1	15	2	3662
#11 Briggs Road & Baxter Road - Jean Nicholas													
Base	0	206	43	38	534	0	0	0	0	9	0	75	905
Added	0	0	0	0	0	0	0	0	0	0	0	0	0
Total	0	206	43	38	534	0	0	0	0	9	0	75	905
#12 Leon Road & Jean Nicholas													
Base	0	0	0	0	0	0	0	0	0	0	0	0	0
Added	0	0	0	0	0	0	0	0	0	0	0	0	0
Total	0	0	0	0	0	0	0	0	0	0	0	0	0
#13 Winchester Road - SR-79 & Nicholas - Skyview													
Base	138	1381	338	22	2896	33	37	330	132	106	327	166	5906
Added	0	0	0	0	0	0	0	0	0	0	0	0	0
Total	138	1381	338	22	2896	33	37	330	132	106	327	166	5906
#14 Antelope Road & Linnel Lane Extension													
Base	21	757	96	99	487	530	199	507	125	6	120	220	3167
Added	0	0	0	0	0	0	0	0	0	0	0	0	0
Total	21	757	96	99	487	530	199	507	125	6	120	220	3167
#15 Whitewood Road - Meadowlark Road & Linnel Lane Extension													
Base	18	797	678	281	1152	183	33	556	114	45	144	324	4325
Added	0	0	0	0	0	0	0	0	0	0	0	0	0
Total	18	797	678	281	1152	183	33	556	114	45	144	324	4325
#16 Leon Road & Max Gillis Road													
Base	417	107	396	383	363	152	100	470	767	631	322	182	4290
Added	0	0	0	0	0	0	0	0	0	0	0	0	0
Total	417	107	396	383	363	152	100	470	767	631	322	182	4290
#17 Winchester Road - SR-79 & Max Gillis - Thompson													
Base	200	1300	46	140	2198	729	609	165	279	31	298	39	6034
Added	0	0	0	0	0	0	0	0	0	0	0	0	0
Total	200	1300	46	140	2198	729	609	165	279	31	298	39	6034
#18 California Oaks Road & Clinton Keith Road													
Base	204	0	669	0	0	0	0	2680	307	773	1675	0	6308
Added	0	0	0	0	0	0	0	0	0	0	0	0	0
Total	204	0	669	0	0	0	0	2680	307	773	1675	0	6308

City of Murrieta General Plan
Future Proposed General Plan
AM Peak Hour

Volume Type	Northbound Left	Northbound Thru	Northbound Right	Southbound Left	Southbound Thru	Southbound Right	Eastbound Left	Eastbound Thru	Eastbound Right	Westbound Left	Westbound Thru	Westbound Right	Total Volume
#19 I-215 SB Off-Ramp & Clinton Keith Road													
Base	0	0	0	58	0	420	0	2401	496	0	2089	227	5691
Added	0	0	0	0	0	0	0	0	0	0	0	0	0
Total	0	0	0	58	0	420	0	2401	496	0	2089	227	5691
#20 I-215 NB Off Ramp & Clinton Keith Road													
Base	162	0	1393	0	0	0	0	1797	334	0	2305	233	6224
Added	0	0	0	0	0	0	0	0	0	0	0	0	0
Total	162	0	1393	0	0	0	0	1797	334	0	2305	233	6224
#21 Antelope Road & Clinton Keith Road													
Base	0	0	0	15	0	426	388	1869	0	0	1643	296	4637
Added	0	0	0	0	0	0	0	0	0	0	0	0	0
Total	0	0	0	15	0	426	388	1869	0	0	1643	296	4637
#22 Meadowlark Lane - Whitewood Road & Clinton Keith Road													
Base	0	0	0	0	0	0	0	0	0	0	0	0	0
Added	0	0	0	0	0	0	0	0	0	0	0	0	0
Total	0	0	0	0	0	0	0	0	0	0	0	0	0
#23 Liberty Road & Clinton Keith Road													
Base	65	0	217	0	0	0	0	1615	205	44	2610	0	4756
Added	0	0	0	0	0	0	0	0	0	0	0	0	0
Total	65	0	217	0	0	0	0	1615	205	44	2610	0	4756
#24 Leon Road & Clinton Keith Road													
Base	0	0	0	144	0	1537	396	1420	0	0	858	561	4916
Added	0	0	0	0	0	0	0	0	0	0	0	0	0
Total	0	0	0	144	0	1537	396	1420	0	0	858	561	4916
#25 Winchester Road - SR-79 & Benton Road													
Base	490	1366	368	96	2041	400	38	470	978	344	614	32	7237
Added	0	0	0	0	0	0	0	0	0	0	0	0	0
Total	490	1366	368	96	2041	400	38	470	978	344	614	32	7237
#26 Winchester Road - SR-79 & Via Mira Mosa													
Base	28	1593	798	319	2788	234	358	49	95	177	19	29	6487
Added	0	0	0	0	0	0	0	0	0	0	0	0	0
Total	28	1593	798	319	2788	234	358	49	95	177	19	29	6487
#27 Monroe Ave & Los Alamos													
Base	28	223	188	569	475	208	46	351	134	63	994	473	3752
Added	0	0	0	0	0	0	0	0	0	0	0	0	0
Total	28	223	188	569	475	208	46	351	134	63	994	473	3752

City of Murrieta General Plan
Future Proposed General Plan
AM Peak Hour

Volume Type	Northbound Left	Northbound Thru	Northbound Right	Southbound Left	Southbound Thru	Southbound Right	Eastbound Left	Eastbound Thru	Eastbound Right	Westbound Left	Westbound Thru	Westbound Right	Total Volume
#28 Jefferson Avenue & Murrieta Hot Springs Road													
Base	10	1074	495	919	1236	77	15	76	21	876	93	921	5813
Added	0	0	0	0	0	0	0	0	0	0	0	0	0
Total	10	1074	495	919	1236	77	15	76	21	876	93	921	5813
#29 Madison Avenue & Murrieta Hot Springs Road													
Base	127	67	324	183	184	156	117	1137	271	754	1769	74	5163
Added	0	0	0	0	0	0	0	0	0	0	0	0	0
Total	127	67	324	183	184	156	117	1137	271	754	1769	74	5163
#30 I-15 SB Off-Ramp & Murrieta Hot Springs Road													
Base	0	0	0	808	0	421	0	1385	215	0	2301	47	5177
Added	0	0	0	0	0	0	0	0	0	0	0	0	0
Total	0	0	0	808	0	421	0	1385	215	0	2301	47	5177
#31 I-15 NB Off-Ramp & Murrieta Hot Springs Road													
Base	292	0	60	0	0	0	0	2202	210	0	1546	598	4908
Added	0	0	0	0	0	0	0	0	0	0	0	0	0
Total	292	0	60	0	0	0	0	2202	210	0	1546	598	4908
#32 I-215 SB Off-Ramp & Murrieta Hot Springs Road													
Base	0	0	0	483	0	524	0	1838	53	0	2599	378	5875
Added	0	0	0	0	0	0	0	0	0	0	0	0	0
Total	0	0	0	483	0	524	0	1838	53	0	2599	378	5875
#33 I-215 NB Off-Ramp & Murrieta Hot Springs Road													
Base	343	0	24	0	0	0	0	1583	115	0	2623	663	5351
Added	0	0	0	0	0	0	0	0	0	0	0	0	0
Total	343	0	24	0	0	0	0	1583	115	0	2623	663	5351
#34 Jackson Avenue & Murrieta Hot Springs Road													
Base	68	0	52	0	0	0	0	1217	38	149	2024	0	3548
Added	0	0	0	0	0	0	0	0	0	0	0	0	0
Total	68	0	52	0	0	0	0	1217	38	149	2024	0	3548
#35 Margarita Road & Murrieta Hot Springs Road													
Base	640	60	128	41	17	7	161	750	462	302	1793	71	4432
Added	0	0	0	0	0	0	0	0	0	0	0	0	0
Total	640	60	128	41	17	7	161	750	462	302	1793	71	4432
#36 French Valley Parkway & Murrieta Hot Springs Road													
Base	19	0	829	0	0	0	0	1182	269	805	2004	0	5108
Added	0	0	0	0	0	0	0	0	0	0	0	0	0
Total	19	0	829	0	0	0	0	1182	269	805	2004	0	5108

City of Murrieta General Plan
Future Proposed General Plan
AM Peak Hour

Volume Type	Northbound Left	Northbound Thru	Northbound Right	Southbound Left	Southbound Thru	Southbound Right	Eastbound Left	Eastbound Thru	Eastbound Right	Westbound Left	Westbound Thru	Westbound Right	Total Volume
#37 Jefferson Avenue & Guava Street													
Base	22	1363	3	7	1420	306	176	108	89	2	32	10	3538
Added	0	0	0	0	0	0	0	0	0	0	0	0	0
Total	22	1363	3	7	1420	306	176	108	89	2	32	10	3538
#38 Jefferson Avenue & Cherry Street													
Base	0	0	0	0	0	0	0	0	0	0	0	0	0
Added	0	0	0	0	0	0	0	0	0	0	0	0	0
Total	0	0	0	0	0	0	0	0	0	0	0	0	0
#39 Washington Ave & Calle Del Oso Oro/Nutmeg													
Base	262	164	126	88	218	88	64	602	742	151	189	38	2732
Added	0	0	0	0	0	0	0	0	0	0	0	0	0
Total	262	164	126	88	218	88	64	602	742	151	189	38	2732
#40 Clinton Keith Rd & Calle de Oso Oro/Bear Creek Dr													
Base	63	107	268	4	115	192	269	613	172	420	598	19	2840
Added	0	0	0	0	0	0	0	0	0	0	0	0	0
Total	63	107	268	4	115	192	269	613	172	420	598	19	2840
#41 Jefferson Ave & Nutmeg St													
Base	0	0	0	0	0	0	0	0	0	0	0	0	0
Added	0	0	0	0	0	0	0	0	0	0	0	0	0
Total	0	0	0	0	0	0	0	0	0	0	0	0	0
#42 Jefferson Ave & Magnolia St													
Base	0	0	0	0	0	0	0	0	0	0	0	0	0
Added	0	0	0	0	0	0	0	0	0	0	0	0	0
Total	0	0	0	0	0	0	0	0	0	0	0	0	0
#43 Jefferson Ave & Lemon St													
Base	320	733	28	4	2585	166	31	3	334	8	13	6	4231
Added	0	0	0	0	0	0	0	0	0	0	0	0	0
Total	320	733	28	4	2585	166	31	3	334	8	13	6	4231
#44 Jefferson Ave & Kalmia St													
Base	261	957	246	967	1732	170	55	502	349	223	355	556	6373
Added	0	0	0	0	0	0	0	0	0	0	0	0	0
Total	261	957	246	967	1732	170	55	502	349	223	355	556	6373
#45 Jefferson Ave & Juniper St													
Base	471	1298	35	71	2027	173	137	99	188	7	101	22	4629
Added	0	0	0	0	0	0	0	0	0	0	0	0	0
Total	471	1298	35	71	2027	173	137	99	188	7	101	22	4629

City of Murrieta General Plan
Future Proposed General Plan
AM Peak Hour

Volume Type	Northbound Left	Northbound Thru	Northbound Right	Southbound Left	Southbound Thru	Southbound Right	Eastbound Left	Eastbound Thru	Eastbound Right	Westbound Left	Westbound Thru	Westbound Right	Total Volume
#46 Jefferson Ave & Ivy St/Los Alamos Rd													
Base	259	1336	111	327	1823	72	49	95	129	363	121	400	5085
Added	0	0	0	0	0	0	0	0	0	0	0	0	0
Total	259	1336	111	327	1823	72	49	95	129	363	121	400	5085
#47 Madison Ave & Kalmia St													
Base	0	0	0	0	0	0	0	0	0	0	0	0	0
Added	0	0	0	0	0	0	0	0	0	0	0	0	0
Total	0	0	0	0	0	0	0	0	0	0	0	0	0
#48 Madison Ave/I-15 SB Ramps & Kalmia St													
Base	119	0	219	250	51	272	0	1459	245	386	1139	505	4645
Added	0	0	0	0	0	0	0	0	0	0	0	0	0
Total	119	0	219	250	51	272	0	1459	245	386	1139	505	4645
#49 Monroe Ave & Murrieta Hot Springs Rd													
Base	0	0	0	0	0	0	0	0	0	0	0	0	0
Added	0	0	0	0	0	0	0	0	0	0	0	0	0
Total	0	0	0	0	0	0	0	0	0	0	0	0	0
#50 Hancock Ave & Murrieta Hot Springs Rd													
Base	0	0	0	379	0	598	697	1520	0	0	2602	566	6362
Added	0	0	0	0	0	0	0	0	0	0	0	0	0
Total	0	0	0	379	0	598	697	1520	0	0	2602	566	6362
#51 Alta Murrieta Dr & Murrieta Hot Springs Rd													
Base	221	82	19	69	130	313	258	982	282	131	1871	169	4527
Added	0	0	0	0	0	0	0	0	0	0	0	0	0
Total	221	82	19	69	130	313	258	982	282	131	1871	169	4527
#52 Winchester Road - SR-79 & Murrieta Hot Springs Rd													
Base	288	1507	155	161	1461	1426	768	265	95	276	897	83	7382
Added	0	0	0	0	0	0	0	0	0	0	0	0	0
Total	288	1507	155	161	1461	1426	768	265	95	276	897	83	7382
#53 Hancock Ave & Los Alamos Rd													
Base	48	120	221	793	252	93	71	969	72	916	1682	614	5851
Added	0	0	0	0	0	0	0	0	0	0	0	0	0
Total	48	120	221	793	252	93	71	969	72	916	1682	614	5851
#54 I-215 SB Ramps & Los Alamos Rd													
Base	0	0	0	405	0	2037	0	1419	478	220	1506	0	6065
Added	0	0	0	0	0	0	0	0	0	0	0	0	0
Total	0	0	0	405	0	2037	0	1419	478	220	1506	0	6065

City of Murrieta General Plan
Future Proposed General Plan
AM Peak Hour

Volume Type	Northbound Left	Northbound Thru	Northbound Right	Southbound Left	Southbound Thru	Southbound Right	Eastbound Left	Eastbound Thru	Eastbound Right	Westbound Left	Westbound Thru	Westbound Right	Total Volume
#55 I-215 NB Ramps & Los Alamos Rd													
Base	550	0	377	0	0	0	591	1233	0	0	1185	160	4096
Added	0	0	0	0	0	0	0	0	0	0	0	0	0
Total	550	0	377	0	0	0	591	1233	0	0	1185	160	4096
#56 Whitewood Rd & Los Alamos Rd													
Base	83	372	38	26	432	617	823	232	109	48	241	34	3055
Added	0	0	0	0	0	0	0	0	0	0	0	0	0
Total	83	372	38	26	432	617	823	232	109	48	241	34	3055
#57 Whitewood Rd & Murrieta Hot Springs Rd													
Base	50	240	241	260	536	102	32	1001	132	514	2105	166	5379
Added	0	0	0	0	0	0	0	0	0	0	0	0	0
Total	50	240	241	260	536	102	32	1001	132	514	2105	166	5379
#58 Adams Ave & Guava St													
Base	0	0	0	0	0	0	0	0	0	0	0	0	0
Added	0	0	0	0	0	0	0	0	0	0	0	0	0
Total	0	0	0	0	0	0	0	0	0	0	0	0	0
#59 Nutmeg St & Clinton Keith Rd													
Base	67	41	484	425	54	67	50	2123	110	386	1317	156	5280
Added	0	0	0	0	0	0	0	0	0	0	0	0	0
Total	67	41	484	425	54	67	50	2123	110	386	1317	156	5280
#60 Murrieta Oaks Ave-Mitchell Rd & Clinton Keith Rd													
Base	101	241	85	19	69	196	203	2903	312	78	2088	405	6700
Added	0	0	0	0	0	0	0	0	0	0	0	0	0
Total	101	241	85	19	69	196	203	2903	312	78	2088	405	6700
#61 I-215 SB Ramps & Scott Rd													
Base	0	0	0	246	0	104	0	1052	385	0	866	384	3037
Added	0	0	0	0	0	0	0	0	0	0	0	0	0
Total	0	0	0	246	0	104	0	1052	385	0	866	384	3037
#62 I-215 NB Ramps & Scott Rd													
Base	0	15	600	0	0	259	156	1199	0	0	978	329	3536
Added	0	0	0	0	0	0	0	0	0	0	0	0	0
Total	0	15	600	0	0	259	156	1199	0	0	978	329	3536
#102 Leon Road & Scott Road													
Base	104	198	2	101	444	489	353	438	498	14	360	157	3158
Added	0	0	0	0	0	0	0	0	0	0	0	0	0
Total	104	198	2	101	444	489	353	438	498	14	360	157	3158

City of Murrieta General Plan
Future Proposed General Plan
AM Peak Hour

Volume Type	Northbound Left	Northbound Thru	Northbound Right	Southbound Left	Southbound Thru	Southbound Right	Eastbound Left	Eastbound Thru	Eastbound Right	Westbound Left	Westbound Thru	Westbound Right	Total Volume
#104 Antelope Road & Keller Road													
Base	66	43	328	241	584	447	405	791	1203	758	467	27	5360
Added	0	0	0	0	0	0	0	0	0	0	0	0	0
Total	66	43	328	241	584	447	405	791	1203	758	467	27	5360
#105 Menifee Road - Meadowlark Road & Keller Road													
Base	23	226	251	133	1301	680	495	199	565	299	400	125	4697
Added	0	0	0	0	0	0	0	0	0	0	0	0	0
Total	23	226	251	133	1301	680	495	199	565	299	400	125	4697
#107 Leon Road & Keller Road													
Base	111	330	18	4	868	156	2	60	106	7	65	5	1732
Added	0	0	0	0	0	0	0	0	0	0	0	0	0
Total	111	330	18	4	868	156	2	60	106	7	65	5	1732
#108 Winchester Road - SR-79 & Keller Road													
Base	1	1512	25	5	2774	3	1	10	1	13	20	50	4415
Added	0	0	0	0	0	0	0	0	0	0	0	0	0
Total	1	1512	25	5	2774	3	1	10	1	13	20	50	4415
#112 Leon Road & Jean Nicholas													
Base	5	183	126	261	649	53	2	145	13	157	22	249	1865
Added	0	0	0	0	0	0	0	0	0	0	0	0	0
Total	5	183	126	261	649	53	2	145	13	157	22	249	1865
#122 Meadowlark Lane - Whitewood Road & Clinton Keith Road													
Base	133	230	1083	212	134	715	1386	486	82	943	1187	594	7185
Added	0	0	0	0	0	0	0	0	0	0	0	0	0
Total	133	230	1083	212	134	715	1386	486	82	943	1187	594	7185
#138 Jefferson Avenue & Cherry Street													
Base	86	620	196	37	640	22	1	48	6	147	1311	893	4007
Added	0	0	0	0	0	0	0	0	0	0	0	0	0
Total	86	620	196	37	640	22	1	48	6	147	1311	893	4007
#141 Jefferson Ave & Nutmeg St													
Base	181	321	272	96	1887	69	93	223	509	366	171	67	4255
Added	0	0	0	0	0	0	0	0	0	0	0	0	0
Total	181	321	272	96	1887	69	93	223	509	366	171	67	4255
#142 Jefferson Ave & Magnolia St													
Base	81	637	8	8	2543	247	158	1	155	27	3	1	3869
Added	0	0	0	0	0	0	0	0	0	0	0	0	0
Total	81	637	8	8	2543	247	158	1	155	27	3	1	3869

City of Murrieta General Plan
Future Proposed General Plan
AM Peak Hour

Volume Type	Northbound Left	Northbound Thru	Northbound Right	Southbound Left	Southbound Thru	Southbound Right	Eastbound Left	Eastbound Thru	Eastbound Right	Westbound Left	Westbound Thru	Westbound Right	Total Volume
#149 Monroe Ave & Murrieta Hot Springs Rd													
Base	46	73	48	1	47	50	101	1156	34	7	1552	21	3136
Added	0	0	0	0	0	0	0	0	0	0	0	0	0
Total	46	73	48	1	47	50	101	1156	34	7	1552	21	3136
#158 Adams Ave & Guava St													
Base	78	97	21	101	21	40	23	324	46	3	256	108	1118
Added	0	0	0	0	0	0	0	0	0	0	0	0	0
Total	78	97	21	101	21	40	23	324	46	3	256	108	1118

City of Murrieta General Plan
Future Proposed General Plan
AM Peak Hour

Impact Analysis Report
Level Of Service

Intersection	Base LOS	Base Del/Veh	Base V/C	Future LOS	Future Del/Veh	Future V/C	Change in V/C	
# 1 Menifee Road & Scott Road	C	29.5	0.711	C	29.5	0.711	+ 0.000	D/V
# 3 Winchester Road/SR-79 & Scott	F	132.7	1.251	F	132.7	1.251	+ 0.000	D/V
# 6 Briggs Road & Keller Road	B	13.6	0.341	B	13.6	0.341	+ 0.000	D/V
# 9 Antelope Road & Golden City Dr	C	20.3	0.696	C	20.3	0.696	+ 0.000	D/V
# 10 Whitewood Roa - /Meadowlark Ro	E	75.8	1.178	E	75.8	1.178	+ 0.000	D/V
# 14 Antelope Road & Linnel Lane Ex	C	21.4	0.586	C	21.4	0.586	+ 0.000	D/V
# 15 Whitewood Road - Meadowlark Ro	C	24.6	0.794	C	24.6	0.794	+ 0.000	D/V
# 28 Jefferson Avenue & Murrieta Ho	E	56.1	1.048	E	56.1	1.048	+ 0.000	D/V
# 29 Madison Avenue & Murrieta Hot	C	23.5	0.591	C	23.5	0.591	+ 0.000	D/V
# 44 Jefferson Ave & Kalmia St	E	60.3	1.095	E	60.3	1.095	+ 0.000	D/V
# 46 Jefferson Ave & Ivy St/Los Ala	C	26.8	0.705	C	26.8	0.705	+ 0.000	D/V
# 57 Whitewood Rd & Murrieta Hot Sp	C	24.3	0.718	C	24.3	0.718	+ 0.000	D/V
#102 Leon Road & Scott Road	C	26.6	0.640	C	26.6	0.640	+ 0.000	D/V

City of Murrieta General Plan
Future Proposed General Plan
AM Peak Hour

Level Of Service Computation Report
2000 HCM Operations Method (Future Volume Alternative)

****
Intersection #1 Menifee Road & Scott Road
****

Cycle (sec): 100 Critical Vol./Cap.(X): 0.711
Loss Time (sec): 0 (Y+R=4.0 sec) Average Delay (sec/veh): 29.5
Optimal Cycle: 79 Level Of Service: C

****

Street Name:	Menifee Rd						Scott Rd					
Approach:	North Bound			South Bound			East Bound			West Bound		
Movement:	L	T	R	L	T	R	L	T	R	L	T	R
Control:	Protected			Protected			Protected			Protected		
Rights:	Ovl			Ovl			Ovl			Ovl		
Min. Green:	0	0	0	0	0	0	0	0	0	0	0	0
Lanes:	1 0	2 0	1	1 0	2 0	1	2 0	3 0	1	2 0	3 0	1
Volume Module:												
Base Vol:	238	358	374	253	845	93	102	510	316	864	479	251
Growth Adj:	1.00	1.00	1.00	1.00	1.00	1.00	1.00	1.00	1.00	1.00	1.00	1.00
Initial Bse:	238	358	374	253	845	93	102	510	316	864	479	251
Added Vol:	0	0	0	0	0	0	0	0	0	0	0	0
PasserByVol:	0	0	0	0	0	0	0	0	0	0	0	0
Initial Fut:	238	358	374	253	845	93	102	510	316	864	479	251
User Adj:	1.00	1.00	1.00	1.00	1.00	1.00	1.00	1.00	1.00	1.00	1.00	1.00
PHF Adj:	1.00	1.00	1.00	1.00	1.00	1.00	1.00	1.00	1.00	1.00	1.00	1.00
PHF Volume:	238	358	374	253	845	93	102	510	316	864	479	251
Reduct Vol:	0	0	0	0	0	0	0	0	0	0	0	0
Reduced Vol:	238	358	374	253	845	93	102	510	316	864	479	251
PCE Adj:	1.00	1.00	1.00	1.00	1.00	1.00	1.00	1.00	1.00	1.00	1.00	1.00
MLF Adj:	1.00	1.00	1.00	1.00	1.00	1.00	1.00	1.00	1.00	1.00	1.00	1.00
FinalVolume:	238	358	374	253	845	93	102	510	316	864	479	251
Saturation Flow Module:												
Sat/Lane:	1900	1900	1900	1900	1900	1900	1900	1900	1900	1900	1900	1900
Adjustment:	0.95	0.95	0.85	0.95	0.95	0.85	0.92	0.91	0.85	0.92	0.91	0.85
Lanes:	1.00	2.00	1.00	1.00	2.00	1.00	2.00	3.00	1.00	2.00	3.00	1.00
Final Sat.:	1805	3610	1615	1805	3610	1615	3502	5187	1615	3502	5187	1615
Capacity Analysis Module:												
Vol/Sat:	0.13	0.10	0.23	0.14	0.23	0.06	0.03	0.10	0.20	0.25	0.09	0.16
Crit Moves:	****				****			****		****		
Green/Cycle:	0.19	0.21	0.56	0.30	0.33	0.45	0.12	0.14	0.32	0.35	0.37	0.67
Volume/Cap:	0.71	0.47	0.41	0.47	0.71	0.13	0.25	0.71	0.60	0.71	0.25	0.23
Delay/Veh:	45.2	34.8	12.9	29.0	31.4	16.4	40.5	44.5	30.4	30.3	22.0	6.5
User DelAdj:	1.00	1.00	1.00	1.00	1.00	1.00	1.00	1.00	1.00	1.00	1.00	1.00
AdjDel/Veh:	45.2	34.8	12.9	29.0	31.4	16.4	40.5	44.5	30.4	30.3	22.0	6.5
LOS by Move:	D	C	B	C	C	B	D	D	C	C	C	A
HCM2kAvgQ:	8	5	7	7	13	2	2	7	9	13	4	3

****

Note: Queue reported is the number of cars per lane.

City of Murrieta General Plan
Future Proposed General Plan
AM Peak Hour

Level Of Service Computation Report
2000 HCM Operations Method (Future Volume Alternative)

Intersection #3 Winchester Road/SR-79 & Scott Road

Cycle (sec): 100 Critical Vol./Cap.(X): 1.251
Loss Time (sec): 0 (Y+R=4.0 sec) Average Delay (sec/veh): 132.7
Optimal Cycle: 180 Level Of Service: F

Street Name:	Winchester Road/SR-79						Scott Road					
Approach:	North Bound			South Bound			East Bound			West Bound		
Movement:	L - T - R			L - T - R			L - T - R			L - T - R		
Control:	Protected			Protected			Protected			Protected		
Rights:	Include			Include			Include			Include		
Min. Green:	0	0	0	0	0	0	0	0	0	0	0	0
Lanes:	1 0	2 1	0	2 0	2 1	0	1 0	2 1	0	1 0	3 0	1
Volume Module:												
Base Vol:	110	1376	51	951	2658	75	117	178	68	17	151	963
Growth Adj:	1.00	1.00	1.00	1.00	1.00	1.00	1.00	1.00	1.00	1.00	1.00	1.00
Initial Bse:	110	1376	51	951	2658	75	117	178	68	17	151	963
Added Vol:	0	0	0	0	0	0	0	0	0	0	0	0
PasserByVol:	0	0	0	0	0	0	0	0	0	0	0	0
Initial Fut:	110	1376	51	951	2658	75	117	178	68	17	151	963
User Adj:	1.00	1.00	1.00	1.00	1.00	1.00	1.00	1.00	1.00	1.00	1.00	1.00
PHF Adj:	1.00	1.00	1.00	1.00	1.00	1.00	1.00	1.00	1.00	1.00	1.00	1.00
PHF Volume:	110	1376	51	951	2658	75	117	178	68	17	151	963
Reduct Vol:	0	0	0	0	0	0	0	0	0	0	0	0
Reduced Vol:	110	1376	51	951	2658	75	117	178	68	17	151	963
PCE Adj:	1.00	1.00	1.00	1.00	1.00	1.00	1.00	1.00	1.00	1.00	1.00	1.00
MLF Adj:	1.00	1.00	1.00	1.00	1.00	1.00	1.00	1.00	1.00	1.00	1.00	1.00
FinalVolume:	110	1376	51	951	2658	75	117	178	68	17	151	963
Saturation Flow Module:												
Sat/Lane:	1900	1900	1900	1900	1900	1900	1900	1900	1900	1900	1900	1900
Adjustment:	0.95	0.91	0.91	0.92	0.91	0.91	0.95	0.87	0.87	0.95	0.91	0.85
Lanes:	1.00	2.89	0.11	2.00	2.92	0.08	1.00	2.17	0.83	1.00	3.00	1.00
Final Sat.:	1805	4977	184	3502	5024	142	1805	3599	1375	1805	5187	1615
Capacity Analysis Module:												
Vol/Sat:	0.06	0.28	0.28	0.27	0.53	0.53	0.06	0.05	0.05	0.01	0.03	0.60
Crit Moves:	****				****		****					****
Green/Cycle:	0.05	0.24	0.24	0.23	0.42	0.42	0.05	0.44	0.44	0.08	0.48	0.48
Volume/Cap:	1.25	1.16	1.16	1.16	1.25	1.25	1.25	0.11	0.11	0.11	0.06	1.25
Delay/Veh:	225.4	120	120.4	124.7	146	145.8	222.3	16.3	16.3	42.6	14.1	149.8
User DelAdj:	1.00	1.00	1.00	1.00	1.00	1.00	1.00	1.00	1.00	1.00	1.00	1.00
AdjDel/Veh:	225.4	120	120.4	124.7	146	145.8	222.3	16.3	16.3	42.6	14.1	149.8
LOS by Move:	F	F	F	F	F	F	F	B	B	D	B	F
HCM2kAvgQ:	8	28	28	27	57	57	9	2	2	1	1	55

Note: Queue reported is the number of cars per lane.

City of Murrieta General Plan
Future Proposed General Plan
AM Peak Hour

Level Of Service Computation Report
2000 HCM Operations Method (Future Volume Alternative)

Intersection #6 Briggs Road & Keller Road

Cycle (sec): 100 Critical Vol./Cap.(X): 0.341
Loss Time (sec): 0 (Y+R=4.0 sec) Average Delay (sec/veh): 13.6
Optimal Cycle: 35 Level Of Service: B

Street Name:	Briggs Road						Keller Road					
Approach:	North Bound			South Bound			East Bound			West Bound		
Movement:	L - T - R			L - T - R			L - T - R			L - T - R		
Control:	Protected			Protected			Protected			Protected		
Rights:	Include			Include			Ovl			Include		
Min. Green:	0	0	0	0	0	0	0	0	0	0	0	0
Lanes:	1 0	1 1	0	1 0	1 1	0	1 0	2 0	1	1 0	1 1	0
Volume Module:												
Base Vol:	346	17	53	0	40	47	1	72	492	15	344	1
Growth Adj:	1.00	1.00	1.00	1.00	1.00	1.00	1.00	1.00	1.00	1.00	1.00	1.00
Initial Bse:	346	17	53	0	40	47	1	72	492	15	344	1
Added Vol:	0	0	0	0	0	0	0	0	0	0	0	0
PasserByVol:	0	0	0	0	0	0	0	0	0	0	0	0
Initial Fut:	346	17	53	0	40	47	1	72	492	15	344	1
User Adj:	1.00	1.00	1.00	1.00	1.00	1.00	1.00	1.00	1.00	1.00	1.00	1.00
PHF Adj:	1.00	1.00	1.00	1.00	1.00	1.00	1.00	1.00	1.00	1.00	1.00	1.00
PHF Volume:	346	17	53	0	40	47	1	72	492	15	344	1
Reduct Vol:	0	0	0	0	0	0	0	0	0	0	0	0
Reduced Vol:	346	17	53	0	40	47	1	72	492	15	344	1
PCE Adj:	1.00	1.00	1.00	1.00	1.00	1.00	1.00	1.00	1.00	1.00	1.00	1.00
MLF Adj:	1.00	1.00	1.00	1.00	1.00	1.00	1.00	1.00	1.00	1.00	1.00	1.00
FinalVolume:	346	17	53	0	40	47	1	72	492	15	344	1
Saturation Flow Module:												
Sat/Lane:	1900	1900	1900	1900	1900	1900	1900	1900	1900	1900	1900	1900
Adjustment:	0.95	0.84	0.84	1.00	0.87	0.87	0.95	0.95	0.85	0.95	0.95	0.95
Lanes:	1.00	1.00	1.00	1.00	1.00	1.00	1.00	2.00	1.00	1.00	1.99	0.01
Final Sat.:	1805	1599	1599	1900	1659	1659	1805	3610	1615	1805	3600	10
Capacity Analysis Module:												
Vol/Sat:	0.19	0.01	0.03	0.00	0.02	0.03	0.00	0.02	0.30	0.01	0.10	0.10
Crit Moves:	****					****			****	****		
Green/Cycle:	0.56	0.64	0.64	0.00	0.08	0.08	0.00	0.33	0.89	0.02	0.35	0.35
Volume/Cap:	0.34	0.02	0.05	0.00	0.29	0.34	0.27	0.06	0.34	0.34	0.27	0.27
Delay/Veh:	12.1	6.4	6.5	0.0	43.6	44.1	85.6	22.9	1.0	52.6	23.2	23.2
User DelAdj:	1.00	1.00	1.00	1.00	1.00	1.00	1.00	1.00	1.00	1.00	1.00	1.00
AdjDel/Veh:	12.1	6.4	6.5	0.0	43.6	44.1	85.6	22.9	1.0	52.6	23.2	23.2
LOS by Move:	B	A	A	A	D	D	F	C	A	D	C	C
HCM2kAvgQ:	6	0	1	0	1	2	0	1	3	1	4	4

Note: Queue reported is the number of cars per lane.

City of Murrieta General Plan
Future Proposed General Plan
AM Peak Hour

Level Of Service Computation Report
2000 HCM Operations Method (Future Volume Alternative)

Intersection #9 Antelope Road & Golden City Drive - Baxter Road

Cycle (sec): 100 Critical Vol./Cap.(X): 0.696
Loss Time (sec): 0 (Y+R=4.0 sec) Average Delay (sec/veh): 20.3
Optimal Cycle: 47 Level Of Service: C

Street Name:	Antelope Road						Golden City Drive - Baxter Road					
Approach:	North Bound			South Bound			East Bound			West Bound		
Movement:	L -	T -	R	L -	T -	R	L -	T -	R	L -	T -	R
Control:	Permitted			Permitted			Permitted			Permitted		
Rights:	Include			Include			Include			Include		
Min. Green:	0	0	0	0	0	0	0	0	0	0	0	0
Lanes:	1 0	2 0	1	1 0	1 1	0	1 0	1 1	0	1 0	1 1	0
Volume Module:												
Base Vol:	1	88	515	381	1070	27	1	75	11	397	203	604
Growth Adj:	1.00	1.00	1.00	1.00	1.00	1.00	1.00	1.00	1.00	1.00	1.00	1.00
Initial Bse:	1	88	515	381	1070	27	1	75	11	397	203	604
Added Vol:	0	0	0	0	0	0	0	0	0	0	0	0
PasserByVol:	0	0	0	0	0	0	0	0	0	0	0	0
Initial Fut:	1	88	515	381	1070	27	1	75	11	397	203	604
User Adj:	1.00	1.00	1.00	1.00	1.00	1.00	1.00	1.00	1.00	1.00	1.00	1.00
PHF Adj:	1.00	1.00	1.00	1.00	1.00	1.00	1.00	1.00	1.00	1.00	1.00	1.00
PHF Volume:	1	88	515	381	1070	27	1	75	11	397	203	604
Reduct Vol:	0	0	0	0	0	0	0	0	0	0	0	0
Reduced Vol:	1	88	515	381	1070	27	1	75	11	397	203	604
PCE Adj:	1.00	1.00	1.00	1.00	1.00	1.00	1.00	1.00	1.00	1.00	1.00	1.00
MLF Adj:	1.00	1.00	1.00	1.00	1.00	1.00	1.00	1.00	1.00	1.00	1.00	1.00
FinalVolume:	1	88	515	381	1070	27	1	75	11	397	203	604
Saturation Flow Module:												
Sat/Lane:	1900	1900	1900	1900	1900	1900	1900	1900	1900	1900	1900	1900
Adjustment:	0.12	0.95	0.85	0.67	0.95	0.95	0.25	0.93	0.93	0.68	0.84	0.84
Lanes:	1.00	2.00	1.00	1.00	1.95	0.05	1.00	1.74	0.26	1.00	1.00	1.00
Final Sat.:	219	3610	1615	1279	3507	88	481	3088	453	1294	1603	1603
Capacity Analysis Module:												
Vol/Sat:	0.00	0.02	0.32	0.30	0.31	0.31	0.00	0.02	0.02	0.31	0.13	0.38
Crit Moves:			****									****
Green/Cycle:	0.46	0.46	0.46	0.46	0.46	0.46	0.54	0.54	0.54	0.54	0.54	0.54
Volume/Cap:	0.01	0.05	0.70	0.65	0.67	0.67	0.00	0.04	0.04	0.57	0.23	0.70
Delay/Veh:	14.8	15.0	24.4	23.5	22.2	22.2	10.5	10.8	10.8	16.2	12.1	18.7
User DelAdj:	1.00	1.00	1.00	1.00	1.00	1.00	1.00	1.00	1.00	1.00	1.00	1.00
AdjDel/Veh:	14.8	15.0	24.4	23.5	22.2	22.2	10.5	10.8	10.8	16.2	12.1	18.7
LOS by Move:	B	B	C	C	C	C	B	B	B	B	B	B
HCM2kAvgQ:	0	1	14	10	14	14	0	1	1	9	3	15

Note: Queue reported is the number of cars per lane.

City of Murrieta General Plan
Future Proposed General Plan
AM Peak Hour

Level Of Service Computation Report
2000 HCM Operations Method (Future Volume Alternative)

Intersection #10 Whitewood Roa - /Meadowlark Road & Golden City Drive - Baxter R

Cycle (sec): 100 Critical Vol./Cap.(X): 1.178
Loss Time (sec): 0 (Y+R=4.0 sec) Average Delay (sec/veh): 75.8
Optimal Cycle: 180 Level Of Service: E

Street Name:	Whitewood Road - Meadowlark Road						Golden City Drive - Baxter Road					
Approach:	North Bound			South Bound			East Bound			West Bound		
Movement:	L -	T -	R	L -	T -	R	L -	T -	R	L -	T -	R
Control:	Protected			Protected			Protected			Protected		
Rights:	Include			Include			Include			Include		
Min. Green:	0	0	0	0	0	0	0	0	0	0	0	0
Lanes:	1 0	1 1	0	1 0	2 0	1	1 0	1 0	1	1 0	1 1	0
Volume Module:												
Base Vol:	316	689	2	0	955	880	59	4	739	1	15	2
Growth Adj:	1.00	1.00	1.00	1.00	1.00	1.00	1.00	1.00	1.00	1.00	1.00	1.00
Initial Bse:	316	689	2	0	955	880	59	4	739	1	15	2
Added Vol:	0	0	0	0	0	0	0	0	0	0	0	0
PasserByVol:	0	0	0	0	0	0	0	0	0	0	0	0
Initial Fut:	316	689	2	0	955	880	59	4	739	1	15	2
User Adj:	1.00	1.00	1.00	1.00	1.00	1.00	1.00	1.00	1.00	1.00	1.00	1.00
PHF Adj:	1.00	1.00	1.00	1.00	1.00	1.00	1.00	1.00	1.00	1.00	1.00	1.00
PHF Volume:	316	689	2	0	955	880	59	4	739	1	15	2
Reduct Vol:	0	0	0	0	0	0	0	0	0	0	0	0
Reduced Vol:	316	689	2	0	955	880	59	4	739	1	15	2
PCE Adj:	1.00	1.00	1.00	1.00	1.00	1.00	1.00	1.00	1.00	1.00	1.00	1.00
MLF Adj:	1.00	1.00	1.00	1.00	1.00	1.00	1.00	1.00	1.00	1.00	1.00	1.00
FinalVolume:	316	689	2	0	955	880	59	4	739	1	15	2
Saturation Flow Module:												
Sat/Lane:	1900	1900	1900	1900	1900	1900	1900	1900	1900	1900	1900	1900
Adjustment:	0.95	0.95	0.95	1.00	0.95	0.85	0.95	1.00	0.85	0.95	0.93	0.93
Lanes:	1.00	1.99	0.01	1.00	2.00	1.00	1.00	1.00	1.00	1.00	1.76	0.24
Final Sat.:	1805	3600	10	1900	3610	1615	1805	1900	1615	1805	3128	417
Capacity Analysis Module:												
Vol/Sat:	0.18	0.19	0.19	0.00	0.26	0.54	0.03	0.00	0.46	0.00	0.00	0.00
Crit Moves:	****					****			****	****		
Green/Cycle:	0.15	0.61	0.61	0.00	0.46	0.46	0.34	0.39	0.39	0.00	0.05	0.05
Volume/Cap:	1.18	0.31	0.31	0.00	0.57	1.18	0.10	0.01	1.18	1.18	0.10	0.10
Delay/Veh:	154.5	9.4	9.4	0.0	20.1	120.6	22.6	18.7	126.6	1151	45.6	45.6
User DelAdj:	1.00	1.00	1.00	1.00	1.00	1.00	1.00	1.00	1.00	1.00	1.00	1.00
AdjDel/Veh:	154.5	9.4	9.4	0.0	20.1	120.6	22.6	18.7	126.6	1151	45.6	45.6
LOS by Move:	F	A	A	A	C	F	C	B	F	F	D	D
HCM2kAvgQ:	19	5	5	0	12	46	1	0	39	0	0	0

Note: Queue reported is the number of cars per lane.

City of Murrieta General Plan
Future Proposed General Plan
AM Peak Hour

Level Of Service Computation Report
2000 HCM Operations Method (Future Volume Alternative)

Intersection #14 Antelope Road & Linnel Lane Extension

Cycle (sec): 100 Critical Vol./Cap.(X): 0.586
Loss Time (sec): 0 (Y+R=4.0 sec) Average Delay (sec/veh): 21.4
Optimal Cycle: 55 Level Of Service: C

Street Name:	Antelope Road						Linnel Lane Extension					
Approach:	North Bound			South Bound			East Bound			West Bound		
Movement:	L	T	R	L	T	R	L	T	R	L	T	R
Control:	Protected			Protected			Protected			Protected		
Rights:	Include			Include			Include			Include		
Min. Green:	0	0	0	0	0	0	0	0	0	0	0	0
Lanes:	1 0	2 0	1	1 0	2 0	1	1 0	2 0	1	1 0	2 0	1
Volume Module:												
Base Vol:	21	757	96	99	487	530	199	507	125	6	120	220
Growth Adj:	1.00	1.00	1.00	1.00	1.00	1.00	1.00	1.00	1.00	1.00	1.00	1.00
Initial Bse:	21	757	96	99	487	530	199	507	125	6	120	220
Added Vol:	0	0	0	0	0	0	0	0	0	0	0	0
PasserByVol:	0	0	0	0	0	0	0	0	0	0	0	0
Initial Fut:	21	757	96	99	487	530	199	507	125	6	120	220
User Adj:	1.00	1.00	1.00	1.00	1.00	1.00	1.00	1.00	1.00	1.00	1.00	1.00
PHF Adj:	1.00	1.00	1.00	1.00	1.00	1.00	1.00	1.00	1.00	1.00	1.00	1.00
PHF Volume:	21	757	96	99	487	530	199	507	125	6	120	220
Reduct Vol:	0	0	0	0	0	0	0	0	0	0	0	0
Reduced Vol:	21	757	96	99	487	530	199	507	125	6	120	220
PCE Adj:	1.00	1.00	1.00	1.00	1.00	1.00	1.00	1.00	1.00	1.00	1.00	1.00
MLF Adj:	1.00	1.00	1.00	1.00	1.00	1.00	1.00	1.00	1.00	1.00	1.00	1.00
FinalVolume:	21	757	96	99	487	530	199	507	125	6	120	220
Saturation Flow Module:												
Sat/Lane:	1900	1900	1900	1900	1900	1900	1900	1900	1900	1900	1900	1900
Adjustment:	0.95	0.95	0.85	0.95	0.95	0.85	0.95	0.95	0.85	0.95	0.95	0.85
Lanes:	1.00	2.00	1.00	1.00	2.00	1.00	1.00	2.00	1.00	1.00	2.00	1.00
Final Sat.:	1805	3610	1615	1805	3610	1615	1805	3610	1615	1805	3610	1615
Capacity Analysis Module:												
Vol/Sat:	0.01	0.21	0.06	0.05	0.13	0.33	0.11	0.14	0.08	0.00	0.03	0.14
Crit Moves:	****					****	****					****
Green/Cycle:	0.02	0.46	0.46	0.12	0.56	0.56	0.19	0.41	0.41	0.01	0.23	0.23
Volume/Cap:	0.59	0.46	0.13	0.46	0.24	0.59	0.59	0.34	0.19	0.34	0.14	0.59
Delay/Veh:	71.3	18.7	15.6	42.5	11.3	15.4	39.7	20.3	19.0	60.5	30.6	36.5
User DelAdj:	1.00	1.00	1.00	1.00	1.00	1.00	1.00	1.00	1.00	1.00	1.00	1.00
AdjDel/Veh:	71.3	18.7	15.6	42.5	11.3	15.4	39.7	20.3	19.0	60.5	30.6	36.5
LOS by Move:	E	B	B	D	B	B	D	C	B	E	C	D
HCM2kAvgQ:	2	8	2	3	4	11	6	6	2	1	2	7

Note: Queue reported is the number of cars per lane.

City of Murrieta General Plan
Future Proposed General Plan
AM Peak Hour

Level Of Service Computation Report
2000 HCM Operations Method (Future Volume Alternative)

Intersection #15 Whitewood Road - Meadowlark Road & Linnel Lane Extension

Cycle (sec): 100 Critical Vol./Cap.(X): 0.794
Loss Time (sec): 0 (Y+R=4.0 sec) Average Delay (sec/veh): 24.6
Optimal Cycle: 111 Level Of Service: C

Street Name:	Whitewood Road - Meadowlark Road						Linnel Lane Extension (Future)					
Approach:	North Bound			South Bound			East Bound			West Bound		
Movement:	L	T	R	L	T	R	L	T	R	L	T	R
Control:	Protected			Protected			Protected			Protected		
Rights:	Include			Include			Include			Include		
Min. Green:	0	0	0	0	0	0	0	0	0	0	0	0
Lanes:	1 0	2 0	1	1 0	1 1	0	1 0	1 1	0	1 0	2 0	1
Volume Module:												
Base Vol:	18	797	678	281	1152	183	33	556	114	45	144	324
Growth Adj:	1.00	1.00	1.00	1.00	1.00	1.00	1.00	1.00	1.00	1.00	1.00	1.00
Initial Bse:	18	797	678	281	1152	183	33	556	114	45	144	324
Added Vol:	0	0	0	0	0	0	0	0	0	0	0	0
PasserByVol:	0	0	0	0	0	0	0	0	0	0	0	0
Initial Fut:	18	797	678	281	1152	183	33	556	114	45	144	324
User Adj:	1.00	1.00	1.00	1.00	1.00	1.00	1.00	1.00	1.00	1.00	1.00	1.00
PHF Adj:	1.00	1.00	1.00	1.00	1.00	1.00	1.00	1.00	1.00	1.00	1.00	1.00
PHF Volume:	18	797	678	281	1152	183	33	556	114	45	144	324
Reduct Vol:	0	0	0	0	0	0	0	0	0	0	0	0
Reduced Vol:	18	797	678	281	1152	183	33	556	114	45	144	324
PCE Adj:	1.00	1.00	1.00	1.00	1.00	1.00	1.00	1.00	1.00	1.00	1.00	1.00
MLF Adj:	1.00	1.00	1.00	1.00	1.00	1.00	1.00	1.00	1.00	1.00	1.00	1.00
FinalVolume:	18	797	678	281	1152	183	33	556	114	45	144	324
Saturation Flow Module:												
Sat/Lane:	1900	1900	1900	1900	1900	1900	1900	1900	1900	1900	1900	1900
Adjustment:	0.95	0.95	0.85	0.95	0.93	0.93	0.95	0.93	0.93	0.95	0.95	0.85
Lanes:	1.00	2.00	1.00	1.00	1.73	0.27	1.00	1.66	0.34	1.00	2.00	1.00
Final Sat.:	1805	3610	1615	1805	3050	484	1805	2921	599	1805	3610	1615
Capacity Analysis Module:												
Vol/Sat:	0.01	0.22	0.42	0.16	0.38	0.38	0.02	0.19	0.19	0.02	0.04	0.20
Crit Moves:			****	****			****					****
Green/Cycle:	0.02	0.53	0.53	0.20	0.71	0.71	0.02	0.24	0.24	0.03	0.25	0.25
Volume/Cap:	0.54	0.42	0.79	0.79	0.54	0.54	0.79	0.78	0.78	0.78	0.16	0.79
Delay/Veh:	64.5	14.4	24.3	50.0	7.2	7.2	114.4	40.0	40.0	96.8	29.2	45.3
User DelAdj:	1.00	1.00	1.00	1.00	1.00	1.00	1.00	1.00	1.00	1.00	1.00	1.00
AdjDel/Veh:	64.5	14.4	24.3	50.0	7.2	7.2	114.4	40.0	40.0	96.8	29.2	45.3
LOS by Move:	E	B	C	D	A	A	F	D	D	F	C	D
HCM2kAvgQ:	1	8	19	10	10	10	2	12	12	3	2	11

Note: Queue reported is the number of cars per lane.

City of Murrieta General Plan
Future Proposed General Plan
AM Peak Hour

Level Of Service Computation Report
2000 HCM Operations Method (Future Volume Alternative)

Intersection #28 Jefferson Avenue & Murrieta Hot Springs Road

Cycle (sec): 100 | Critical Vol./Cap.(X): 1.048
Loss Time (sec): 0 (Y+R=4.0 sec) | Average Delay (sec/veh): 56.1
Optimal Cycle: 180 | Level Of Service: E

Street Name:	Jefferson Avenue						Murrieta Hot Springs Road					
Approach:	North Bound			South Bound			East Bound			West Bound		
Movement:	L -	T -	R	L -	T -	R	L -	T -	R	L -	T -	R
Control:	Protected			Protected			Protected			Protected		
Rights:	Include			Include			Include			Include		
Min. Green:	0	0	0	0	0	0	0	0	0	0	0	0
Lanes:	1 0	3 0	2	2 0	2 1	0	1 0	2 1	0	1 0	3 0	1
Volume Module:												
Base Vol:	10	1074	495	919	1236	77	15	76	21	876	93	921
Growth Adj:	1.00	1.00	1.00	1.00	1.00	1.00	1.00	1.00	1.00	1.00	1.00	1.00
Initial Bse:	10	1074	495	919	1236	77	15	76	21	876	93	921
Added Vol:	0	0	0	0	0	0	0	0	0	0	0	0
PasserByVol:	0	0	0	0	0	0	0	0	0	0	0	0
Initial Fut:	10	1074	495	919	1236	77	15	76	21	876	93	921
User Adj:	1.00	1.00	1.00	1.00	1.00	1.00	1.00	1.00	1.00	1.00	1.00	1.00
PHF Adj:	1.00	1.00	1.00	1.00	1.00	1.00	1.00	1.00	1.00	1.00	1.00	1.00
PHF Volume:	10	1074	495	919	1236	77	15	76	21	876	93	921
Reduct Vol:	0	0	0	0	0	0	0	0	0	0	0	0
Reduced Vol:	10	1074	495	919	1236	77	15	76	21	876	93	921
PCE Adj:	1.00	1.00	1.00	1.00	1.00	1.00	1.00	1.00	1.00	1.00	1.00	1.00
MLF Adj:	1.00	1.00	1.00	1.00	1.00	1.00	1.00	1.00	1.00	1.00	1.00	1.00
FinalVolume:	10	1074	495	919	1236	77	15	76	21	876	93	921
Saturation Flow Module:												
Sat/Lane:	1900	1900	1900	1900	1900	1900	1900	1900	1900	1900	1900	1900
Adjustment:	0.95	0.91	0.75	0.92	0.90	0.90	0.95	0.88	0.88	0.95	0.91	0.85
Lanes:	1.00	3.00	2.00	2.00	2.82	0.18	1.00	2.35	0.65	1.00	3.00	1.00
Final Sat.:	1805	5187	2842	3502	4839	301	1805	3934	1087	1805	5187	1615
Capacity Analysis Module:												
Vol/Sat:	0.01	0.21	0.17	0.26	0.26	0.26	0.01	0.02	0.02	0.49	0.02	0.57
Crit Moves:		****		****			****					****
Green/Cycle:	0.01	0.20	0.20	0.25	0.44	0.44	0.01	0.02	0.02	0.53	0.54	0.54
Volume/Cap:	0.58	1.05	0.88	1.05	0.58	0.58	1.05	0.91	0.91	0.91	0.03	1.05
Delay/Veh:	91.4	81.7	54.1	81.2	21.6	21.6	304.2	109	109.5	34.3	10.6	66.5
User DelAdj:	1.00	1.00	1.00	1.00	1.00	1.00	1.00	1.00	1.00	1.00	1.00	1.00
AdjDel/Veh:	91.4	81.7	54.1	81.2	21.6	21.6	304.2	109	109.5	34.3	10.6	66.5
LOS by Move:	F	F	D	F	C	C	F	F	F	C	B	E
HCM2kAvgQ:	1	19	12	22	11	11	2	3	3	29	0	39

Note: Queue reported is the number of cars per lane.

City of Murrieta General Plan
Future Proposed General Plan
AM Peak Hour

Level Of Service Computation Report
2000 HCM Operations Method (Future Volume Alternative)

Intersection #29 Madison Avenue & Murrieta Hot Springs Road

Cycle (sec): 100 | Critical Vol./Cap.(X): 0.591
Loss Time (sec): 0 (Y+R=4.0 sec) | Average Delay (sec/veh): 23.5
Optimal Cycle: 56 | Level Of Service: C

Street Name:	Madison Avenue						Murrieta Hot Springs Road					
Approach:	North Bound			South Bound			East Bound			West Bound		
Movement:	L -	T -	R	L -	T -	R	L -	T -	R	L -	T -	R
Control:	Protected			Protected			Protected			Protected		
Rights:	Include			Include			Include			Include		
Min. Green:	0	0	0	0	0	0	0	0	0	0	0	0
Lanes:	2 0	2 0	2	2 0	1 1	0	2 0	3 1	0	2 0	3 0	1
Volume Module:												
Base Vol:	127	67	324	183	184	156	117	1137	271	754	1769	74
Growth Adj:	1.00	1.00	1.00	1.00	1.00	1.00	1.00	1.00	1.00	1.00	1.00	1.00
Initial Bse:	127	67	324	183	184	156	117	1137	271	754	1769	74
Added Vol:	0	0	0	0	0	0	0	0	0	0	0	0
PasserByVol:	0	0	0	0	0	0	0	0	0	0	0	0
Initial Fut:	127	67	324	183	184	156	117	1137	271	754	1769	74
User Adj:	1.00	1.00	1.00	1.00	1.00	1.00	1.00	1.00	1.00	1.00	1.00	1.00
PHF Adj:	1.00	1.00	1.00	1.00	1.00	1.00	1.00	1.00	1.00	1.00	1.00	1.00
PHF Volume:	127	67	324	183	184	156	117	1137	271	754	1769	74
Reduct Vol:	0	0	0	0	0	0	0	0	0	0	0	0
Reduced Vol:	127	67	324	183	184	156	117	1137	271	754	1769	74
PCE Adj:	1.00	1.00	1.00	1.00	1.00	1.00	1.00	1.00	1.00	1.00	1.00	1.00
MLF Adj:	1.00	1.00	1.00	1.00	1.00	1.00	1.00	1.00	1.00	1.00	1.00	1.00
FinalVolume:	127	67	324	183	184	156	117	1137	271	754	1769	74
Saturation Flow Module:												
Sat/Lane:	1900	1900	1900	1900	1900	1900	1900	1900	1900	1900	1900	1900
Adjustment:	0.92	0.95	0.75	0.92	0.88	0.88	0.92	0.88	0.88	0.92	0.91	0.85
Lanes:	2.00	2.00	2.00	2.00	1.08	0.92	2.00	3.23	0.77	2.00	3.00	1.00
Final Sat.:	3502	3610	2842	3502	1819	1542	3502	5423	1293	3502	5187	1615
Capacity Analysis Module:												
Vol/Sat:	0.04	0.02	0.11	0.05	0.10	0.10	0.03	0.21	0.21	0.22	0.34	0.05
Crit Moves:			****	****				****		****		
Green/Cycle:	0.07	0.19	0.19	0.09	0.21	0.21	0.06	0.35	0.35	0.36	0.65	0.65
Volume/Cap:	0.49	0.10	0.59	0.59	0.49	0.49	0.52	0.59	0.59	0.59	0.52	0.07
Delay/Veh:	45.9	33.3	38.5	46.9	35.5	35.5	47.5	26.7	26.7	26.5	9.2	6.3
User DelAdj:	1.00	1.00	1.00	1.00	1.00	1.00	1.00	1.00	1.00	1.00	1.00	1.00
AdjDel/Veh:	45.9	33.3	38.5	46.9	35.5	35.5	47.5	26.7	26.7	26.5	9.2	6.3
LOS by Move:	D	C	D	D	D	D	D	C	C	C	A	A
HCM2kAvgQ:	3	1	6	4	5	5	3	10	10	10	11	1

Note: Queue reported is the number of cars per lane.

City of Murrieta General Plan
Future Proposed General Plan
AM Peak Hour

Level Of Service Computation Report
2000 HCM Operations Method (Future Volume Alternative)

Intersection #44 Jefferson Ave & Kalmia St

Cycle (sec): 100 | Critical Vol./Cap.(X): 1.095
Loss Time (sec): 0 (Y+R=4.0 sec) | Average Delay (sec/veh): 60.3
Optimal Cycle: 180 | Level Of Service: E

Street Name:	Jefferson Ave						Kalmia St					
Approach:	North Bound			South Bound			East Bound			West Bound		
Movement:	L	T	R	L	T	R	L	T	R	L	T	R
Control:	Protected			Protected			Protected			Protected		
Rights:	Include			Include			Include			Include		
Min. Green:	0	0	0	0	0	0	0	0	0	0	0	0
Lanes:	2 0	3 0	1	1 0	2 1	0	1 0	2 1	0	1 0	2 0	1
Volume Module:												
Base Vol:	261	957	246	967	1732	170	55	502	349	223	355	556
Growth Adj:	1.00	1.00	1.00	1.00	1.00	1.00	1.00	1.00	1.00	1.00	1.00	1.00
Initial Bse:	261	957	246	967	1732	170	55	502	349	223	355	556
Added Vol:	0	0	0	0	0	0	0	0	0	0	0	0
PasserByVol:	0	0	0	0	0	0	0	0	0	0	0	0
Initial Fut:	261	957	246	967	1732	170	55	502	349	223	355	556
User Adj:	1.00	1.00	1.00	1.00	1.00	1.00	1.00	1.00	1.00	1.00	1.00	1.00
PHF Adj:	1.00	1.00	1.00	1.00	1.00	1.00	1.00	1.00	1.00	1.00	1.00	1.00
PHF Volume:	261	957	246	967	1732	170	55	502	349	223	355	556
Reduct Vol:	0	0	0	0	0	0	0	0	0	0	0	0
Reduced Vol:	261	957	246	967	1732	170	55	502	349	223	355	556
PCE Adj:	1.00	1.00	1.00	1.00	1.00	1.00	1.00	1.00	1.00	1.00	1.00	1.00
MLF Adj:	1.00	1.00	1.00	1.00	1.00	1.00	1.00	1.00	1.00	1.00	1.00	1.00
FinalVolume:	261	957	246	967	1732	170	55	502	349	223	355	556
Saturation Flow Module:												
Sat/Lane:	1900	1900	1900	1900	1900	1900	1900	1900	1900	1900	1900	1900
Adjustment:	0.92	0.91	0.85	0.95	0.90	0.90	0.95	0.85	0.85	0.95	0.95	0.85
Lanes:	2.00	3.00	1.00	1.00	2.73	0.27	1.00	2.00	1.00	1.00	2.00	1.00
Final Sat.:	3502	5187	1615	1805	4662	458	1805	3247	1624	1805	3610	1615
Capacity Analysis Module:												
Vol/Sat:	0.07	0.18	0.15	0.54	0.37	0.37	0.03	0.15	0.21	0.12	0.10	0.34
Crit Moves:		****		****			****					****
Green/Cycle:	0.11	0.17	0.17	0.49	0.55	0.55	0.03	0.22	0.22	0.12	0.31	0.31
Volume/Cap:	0.68	1.09	0.90	1.09	0.68	0.68	1.09	0.71	0.99	0.99	0.31	1.09
Delay/Veh:	47.6	101	71.6	85.1	16.9	16.9	204.6	38.3	66.9	100.4	26.2	102.6
User DelAdj:	1.00	1.00	1.00	1.00	1.00	1.00	1.00	1.00	1.00	1.00	1.00	1.00
AdjDel/Veh:	47.6	101	71.6	85.1	16.9	16.9	204.6	38.3	66.9	100.4	26.2	102.6
LOS by Move:	D	F	E	F	B	B	F	D	E	F	C	F
HCM2kAvgQ:	5	19	11	44	16	16	4	9	17	11	4	27

Note: Queue reported is the number of cars per lane.

City of Murrieta General Plan
Future Proposed General Plan
AM Peak Hour

Level Of Service Computation Report
2000 HCM Operations Method (Future Volume Alternative)

Intersection #46 Jefferson Ave & Ivy St/Los Alamos Rd

Cycle (sec): 100 | Critical Vol./Cap.(X): 0.705
Loss Time (sec): 0 (Y+R=4.0 sec) | Average Delay (sec/veh): 26.8
Optimal Cycle: 77 | Level Of Service: C

Street Name:	Jefferson Ave						Ivy St/Los Alamos Rd					
Approach:	North Bound			South Bound			East Bound			West Bound		
Movement:	L	T	R	L	T	R	L	T	R	L	T	R
Control:	Protected			Protected			Protected			Protected		
Rights:	Include			Include			Include			Include		
Min. Green:	0	0	0	0	0	0	0	0	0	0	0	0
Lanes:	2 0	3 0	1	2 0	3 0	1	1 0	1 1	0	1 0	2 0	1
Volume Module:												
Base Vol:	259	1336	111	327	1823	72	49	95	129	363	121	400
Growth Adj:	1.00	1.00	1.00	1.00	1.00	1.00	1.00	1.00	1.00	1.00	1.00	1.00
Initial Bse:	259	1336	111	327	1823	72	49	95	129	363	121	400
Added Vol:	0	0	0	0	0	0	0	0	0	0	0	0
PasserByVol:	0	0	0	0	0	0	0	0	0	0	0	0
Initial Fut:	259	1336	111	327	1823	72	49	95	129	363	121	400
User Adj:	1.00	1.00	1.00	1.00	1.00	1.00	1.00	1.00	1.00	1.00	1.00	1.00
PHF Adj:	1.00	1.00	1.00	1.00	1.00	1.00	1.00	1.00	1.00	1.00	1.00	1.00
PHF Volume:	259	1336	111	327	1823	72	49	95	129	363	121	400
Reduct Vol:	0	0	0	0	0	0	0	0	0	0	0	0
Reduced Vol:	259	1336	111	327	1823	72	49	95	129	363	121	400
PCE Adj:	1.00	1.00	1.00	1.00	1.00	1.00	1.00	1.00	1.00	1.00	1.00	1.00
MLF Adj:	1.00	1.00	1.00	1.00	1.00	1.00	1.00	1.00	1.00	1.00	1.00	1.00
FinalVolume:	259	1336	111	327	1823	72	49	95	129	363	121	400
Saturation Flow Module:												
Sat/Lane:	1900	1900	1900	1900	1900	1900	1900	1900	1900	1900	1900	1900
Adjustment:	0.92	0.91	0.85	0.92	0.91	0.85	0.95	0.87	0.87	0.95	0.95	0.85
Lanes:	2.00	3.00	1.00	2.00	3.00	1.00	1.00	1.00	1.00	1.00	2.00	1.00
Final Sat.:	3502	5187	1615	3502	5187	1615	1805	1650	1650	1805	3610	1615
Capacity Analysis Module:												
Vol/Sat:	0.07	0.26	0.07	0.09	0.35	0.04	0.03	0.06	0.08	0.20	0.03	0.25
Crit Moves:	****				****				****	****		
Green/Cycle:	0.10	0.44	0.44	0.16	0.50	0.50	0.04	0.11	0.11	0.29	0.36	0.36
Volume/Cap:	0.70	0.58	0.16	0.58	0.70	0.09	0.69	0.52	0.70	0.70	0.09	0.69
Delay/Veh:	49.4	21.3	16.8	40.4	20.3	13.2	73.2	43.1	49.9	36.4	21.4	31.1
User DelAdj:	1.00	1.00	1.00	1.00	1.00	1.00	1.00	1.00	1.00	1.00	1.00	1.00
AdjDel/Veh:	49.4	21.3	16.8	40.4	20.3	13.2	73.2	43.1	49.9	36.4	21.4	31.1
LOS by Move:	D	C	B	D	C	B	E	D	D	D	C	C
HCM2kAvgQ:	5	12	2	6	17	1	3	4	6	11	1	12

Note: Queue reported is the number of cars per lane.

City of Murrieta General Plan
Future Proposed General Plan
AM Peak Hour

Level Of Service Computation Report
2000 HCM Operations Method (Future Volume Alternative)

Intersection #57 Whitewood Rd & Murrieta Hot Springs Rd

Cycle (sec): 100 | Critical Vol./Cap.(X): 0.718
Loss Time (sec): 0 (Y+R=4.0 sec) | Average Delay (sec/veh): 24.3
Optimal Cycle: 81 | Level Of Service: C

Street Name:	Whitewood Rd						Murrieta Hot Springs Rd					
Approach:	North Bound			South Bound			East Bound			West Bound		
Movement:	L -	T -	R	L -	T -	R	L -	T -	R	L -	T -	R
Control:	Protected			Protected			Protected			Protected		
Rights:	Ovl			Include			Include			Include		
Min. Green:	0	0	0	0	0	0	0	0	0	0	0	0
Lanes:	1 0	2 0	1	1 0	1 1	0	1 0	2 1	0	1 0	2 1	0
Volume Module:												
Base Vol:	50	240	241	260	536	102	32	1001	132	514	2105	166
Growth Adj:	1.00	1.00	1.00	1.00	1.00	1.00	1.00	1.00	1.00	1.00	1.00	1.00
Initial Bse:	50	240	241	260	536	102	32	1001	132	514	2105	166
Added Vol:	0	0	0	0	0	0	0	0	0	0	0	0
PasserByVol:	0	0	0	0	0	0	0	0	0	0	0	0
Initial Fut:	50	240	241	260	536	102	32	1001	132	514	2105	166
User Adj:	1.00	1.00	1.00	1.00	1.00	1.00	1.00	1.00	1.00	1.00	1.00	1.00
PHF Adj:	1.00	1.00	1.00	1.00	1.00	1.00	1.00	1.00	1.00	1.00	1.00	1.00
PHF Volume:	50	240	241	260	536	102	32	1001	132	514	2105	166
Reduct Vol:	0	0	0	0	0	0	0	0	0	0	0	0
Reduced Vol:	50	240	241	260	536	102	32	1001	132	514	2105	166
PCE Adj:	1.00	1.00	1.00	1.00	1.00	1.00	1.00	1.00	1.00	1.00	1.00	1.00
MLF Adj:	1.00	1.00	1.00	1.00	1.00	1.00	1.00	1.00	1.00	1.00	1.00	1.00
FinalVolume:	50	240	241	260	536	102	32	1001	132	514	2105	166
Saturation Flow Module:												
Sat/Lane:	1900	1900	1900	1900	1900	1900	1900	1900	1900	1900	1900	1900
Adjustment:	0.95	0.95	0.85	0.95	0.93	0.93	0.95	0.89	0.89	0.95	0.90	0.90
Lanes:	1.00	2.00	1.00	1.00	1.68	0.32	1.00	2.65	0.35	1.00	2.78	0.22
Final Sat.:	1805	3610	1615	1805	2960	563	1805	4500	593	1805	4755	375
Capacity Analysis Module:												
Vol/Sat:	0.03	0.07	0.15	0.14	0.18	0.18	0.02	0.22	0.22	0.28	0.44	0.44
Crit Moves:		****		****				****		****		
Green/Cycle:	0.04	0.09	0.49	0.20	0.25	0.25	0.03	0.31	0.31	0.40	0.68	0.68
Volume/Cap:	0.71	0.72	0.30	0.72	0.71	0.71	0.65	0.72	0.72	0.72	0.65	0.65
Delay/Veh:	76.3	51.4	15.5	44.1	36.6	36.6	75.2	32.2	32.2	29.0	9.7	9.7
User DelAdj:	1.00	1.00	1.00	1.00	1.00	1.00	1.00	1.00	1.00	1.00	1.00	1.00
AdjDel/Veh:	76.3	51.4	15.5	44.1	36.6	36.6	75.2	32.2	32.2	29.0	9.7	9.7
LOS by Move:	E	D	B	D	D	D	E	C	C	C	A	A
HCM2kAvgQ:	3	5	4	9	11	11	2	13	13	14	15	15

Note: Queue reported is the number of cars per lane.

City of Murrieta General Plan
Future Proposed General Plan
AM Peak Hour

Level Of Service Computation Report
2000 HCM Operations Method (Future Volume Alternative)

Intersection #102 Leon Road & Scott Road

Cycle (sec): 100 | Critical Vol./Cap.(X): 0.640
Loss Time (sec): 0 (Y+R=4.0 sec) | Average Delay (sec/veh): 26.6
Optimal Cycle: 63 | Level Of Service: C

Street Name:	Leon Road						Scott Road					
Approach:	North Bound			South Bound			East Bound			West Bound		
Movement:	L -	T -	R	L -	T -	R	L -	T -	R	L -	T -	R
Control:	Protected			Protected			Protected			Protected		
Rights:	Include			Include			Include			Include		
Min. Green:	0	0	0	0	0	0	0	0	0	0	0	0
Lanes:	2 0	1 1	0	1 0	1 1	0	1 0	3 0	1	1 0	2 1	0
Volume Module:												
Base Vol:	104	198	2	101	444	489	353	438	498	14	360	157
Growth Adj:	1.00	1.00	1.00	1.00	1.00	1.00	1.00	1.00	1.00	1.00	1.00	1.00
Initial Bse:	104	198	2	101	444	489	353	438	498	14	360	157
Added Vol:	0	0	0	0	0	0	0	0	0	0	0	0
PasserByVol:	0	0	0	0	0	0	0	0	0	0	0	0
Initial Fut:	104	198	2	101	444	489	353	438	498	14	360	157
User Adj:	1.00	1.00	1.00	1.00	1.00	1.00	1.00	1.00	1.00	1.00	1.00	1.00
PHF Adj:	1.00	1.00	1.00	1.00	1.00	1.00	1.00	1.00	1.00	1.00	1.00	1.00
PHF Volume:	104	198	2	101	444	489	353	438	498	14	360	157
Reduct Vol:	0	0	0	0	0	0	0	0	0	0	0	0
Reduced Vol:	104	198	2	101	444	489	353	438	498	14	360	157
PCE Adj:	1.00	1.00	1.00	1.00	1.00	1.00	1.00	1.00	1.00	1.00	1.00	1.00
MLF Adj:	1.00	1.00	1.00	1.00	1.00	1.00	1.00	1.00	1.00	1.00	1.00	1.00
FinalVolume:	104	198	2	101	444	489	353	438	498	14	360	157
Saturation Flow Module:												
Sat/Lane:	1900	1900	1900	1900	1900	1900	1900	1900	1900	1900	1900	1900
Adjustment:	0.92	0.95	0.95	0.95	0.87	0.87	0.95	0.91	0.85	0.95	0.87	0.87
Lanes:	2.00	1.98	0.02	1.00	1.00	1.00	1.00	3.00	1.00	1.00	2.09	0.91
Final Sat.:	3502	3570	36	1805	1662	1662	1805	5187	1615	1805	3446	1503
Capacity Analysis Module:												
Vol/Sat:	0.03	0.06	0.06	0.06	0.27	0.29	0.20	0.08	0.31	0.01	0.10	0.10
Crit Moves:	****					****			****	****		
Green/Cycle:	0.05	0.25	0.25	0.25	0.46	0.46	0.32	0.48	0.48	0.01	0.17	0.17
Volume/Cap:	0.64	0.22	0.22	0.22	0.58	0.64	0.61	0.18	0.64	0.64	0.61	0.61
Delay/Veh:	55.2	29.7	29.7	29.7	20.5	21.7	30.4	14.7	21.2	98.9	39.6	39.6
User DelAdj:	1.00	1.00	1.00	1.00	1.00	1.00	1.00	1.00	1.00	1.00	1.00	1.00
AdjDel/Veh:	55.2	29.7	29.7	29.7	20.5	21.7	30.4	14.7	21.2	98.9	39.6	39.6
LOS by Move:	E	C	C	C	C	C	C	B	C	F	D	D
HCM2kAvgQ:	3	3	3	2	11	13	10	3	12	1	6	6

Note: Queue reported is the number of cars per lane.

City of Murrieta General Plan
Future Proposed General Plan
PM Peak Hour

Scenario Report

Scenario:	Future Proposed GP PM
Command:	Future Proposed GP PM
Volume:	Future Proposed GP PM
Geometry:	Future
Impact Fee:	Default Impact Fee
Trip Generation:	Default Trip Generation
Trip Distribution:	Default Trip Distribution
Paths:	Default Path
Routes:	Default Route
Configuration:	Future Proposed GP PM

City of Murrieta General Plan
Future Proposed General Plan
PM Peak Hour

Turning Movement Report

Volume	Northbound			Southbound			Eastbound			Westbound			Total
Type	Left	Thru	Right	Left	Thru	Right	Left	Thru	Right	Left	Thru	Right	Volume
#1 Menifee Road & Scott Road													
Base	291	672	860	196	284	99	272	967	458	408	546	566	5619
Added	0	0	0	0	0	0	0	0	0	0	0	0	0
Total	291	672	860	196	284	99	272	967	458	408	546	566	5619
#2 Leon Road & Scott Road													
Base	0	0	0	0	0	0	0	0	0	0	0	0	0
Added	0	0	0	0	0	0	0	0	0	0	0	0	0
Total	0	0	0	0	0	0	0	0	0	0	0	0	0
#3 Winchester Road/SR-79 & Scott Road													
Base	126	2492	29	1119	1872	128	113	286	119	0	222	1066	7572
Added	0	0	0	0	0	0	0	0	0	0	0	0	0
Total	126	2492	29	1119	1872	128	113	286	119	0	222	1066	7572
#4 Antelope Road & Keller Road													
Base	0	0	0	0	0	0	0	0	0	0	0	0	0
Added	0	0	0	0	0	0	0	0	0	0	0	0	0
Total	0	0	0	0	0	0	0	0	0	0	0	0	0
#5 Menifee Road - Meadowlark Road & Keller Road													
Base	0	0	0	0	0	0	0	0	0	0	0	0	0
Added	0	0	0	0	0	0	0	0	0	0	0	0	0
Total	0	0	0	0	0	0	0	0	0	0	0	0	0
#6 Briggs Road & Keller Road													
Base	300	122	105	1	50	81	20	347	765	9	295	6	2101
Added	0	0	0	0	0	0	0	0	0	0	0	0	0
Total	300	122	105	1	50	81	20	347	765	9	295	6	2101
#7 Leon Road & Keller Road													
Base	0	0	0	0	0	0	0	0	0	0	0	0	0
Added	0	0	0	0	0	0	0	0	0	0	0	0	0
Total	0	0	0	0	0	0	0	0	0	0	0	0	0
#8 Winchester Road - SR-79 & Keller Road													
Base	0	0	0	0	0	0	0	0	0	0	0	0	0
Added	0	0	0	0	0	0	0	0	0	0	0	0	0
Total	0	0	0	0	0	0	0	0	0	0	0	0	0
#9 Antelope Road & Golden City Drive - Baxter Road													
Base	4	428	941	216	974	25	5	202	46	354	178	896	4269
Added	0	0	0	0	0	0	0	0	0	0	0	0	0
Total	4	428	941	216	974	25	5	202	46	354	178	896	4269

City of Murrieta General Plan
Future Proposed General Plan
PM Peak Hour

Volume Type	Northbound Left	Northbound Thru	Northbound Right	Southbound Left	Southbound Thru	Southbound Right	Eastbound Left	Eastbound Thru	Eastbound Right	Westbound Left	Westbound Thru	Westbound Right	Total Volume
#10 Whitewood Roa - /Meadowlark Road & Golden City Drive - Baxter Road													
Base	280	1410	3	0	596	978	319	12	967	0	7	2	4574
Added	0	0	0	0	0	0	0	0	0	0	0	0	0
Total	280	1410	3	0	596	978	319	12	967	0	7	2	4574
#11 Briggs Road & Baxter Road - Jean Nicholas													
Base	0	430	89	46	659	0	0	0	0	10	0	87	1321
Added	0	0	0	0	0	0	0	0	0	0	0	0	0
Total	0	430	89	46	659	0	0	0	0	10	0	87	1321
#12 Leon Road & Jean Nicholas													
Base	0	0	0	0	0	0	0	0	0	0	0	0	0
Added	0	0	0	0	0	0	0	0	0	0	0	0	0
Total	0	0	0	0	0	0	0	0	0	0	0	0	0
#13 Winchester Road - SR-79 & Nicholas - Skyview													
Base	196	2680	209	79	2052	17	37	650	118	150	439	125	6752
Added	0	0	0	0	0	0	0	0	0	0	0	0	0
Total	196	2680	209	79	2052	17	37	650	118	150	439	125	6752
#14 Antelope Road & Linnel Lane Extension													
Base	42	637	99	49	1075	525	117	363	394	58	562	426	4347
Added	0	0	0	0	0	0	0	0	0	0	0	0	0
Total	42	637	99	49	1075	525	117	363	394	58	562	426	4347
#15 Whitewood Road - Meadowlark Road & Linnel Lane Extension													
Base	41	819	636	143	1315	229	22	335	154	223	775	779	5471
Added	0	0	0	0	0	0	0	0	0	0	0	0	0
Total	41	819	636	143	1315	229	22	335	154	223	775	779	5471
#16 Leon Road & Max Gillis Road													
Base	546	437	605	355	259	127	100	199	465	565	344	365	4367
Added	0	0	0	0	0	0	0	0	0	0	0	0	0
Total	546	437	605	355	259	127	100	199	465	565	344	365	4367
#17 Winchester Road - SR-79 & Max Gillis - Thompson													
Base	226	2443	80	294	1319	649	759	310	140	32	242	87	6581
Added	0	0	0	0	0	0	0	0	0	0	0	0	0
Total	226	2443	80	294	1319	649	759	310	140	32	242	87	6581
#18 California Oaks Road & Clinton Keith Road													
Base	312	0	1024	0	0	0	0	2396	112	439	2820	0	7103
Added	0	0	0	0	0	0	0	0	0	0	0	0	0
Total	312	0	1024	0	0	0	0	2396	112	439	2820	0	7103

City of Murrieta General Plan
Future Proposed General Plan
PM Peak Hour

Volume Type	Northbound Left	Northbound Thru	Northbound Right	Southbound Left	Southbound Thru	Southbound Right	Eastbound Left	Eastbound Thru	Eastbound Right	Westbound Left	Westbound Thru	Westbound Right	Total Volume
#19 I-215 SB Off-Ramp & Clinton Keith Road													
Base	0	0	0	47	0	608	0	2930	784	0	2369	219	6957
Added	0	0	0	0	0	0	0	0	0	0	0	0	0
Total	0	0	0	47	0	608	0	2930	784	0	2369	219	6957
#20 I-215 NB Off Ramp & Clinton Keith Road													
Base	409	0	492	0	0	0	0	1562	280	0	2836	314	5893
Added	0	0	0	0	0	0	0	0	0	0	0	0	0
Total	409	0	492	0	0	0	0	1562	280	0	2836	314	5893
#21 Antelope Road & Clinton Keith Road													
Base	0	0	0	174	0	916	117	2128	0	0	1645	427	5407
Added	0	0	0	0	0	0	0	0	0	0	0	0	0
Total	0	0	0	174	0	916	117	2128	0	0	1645	427	5407
#22 Meadowlark Lane - Whitewood Road & Clinton Keith Road													
Base	0	0	0	0	0	0	0	0	0	0	0	0	0
Added	0	0	0	0	0	0	0	0	0	0	0	0	0
Total	0	0	0	0	0	0	0	0	0	0	0	0	0
#23 Liberty Road & Clinton Keith Road													
Base	81	0	286	0	0	0	0	2323	323	41	2078	0	5132
Added	0	0	0	0	0	0	0	0	0	0	0	0	0
Total	81	0	286	0	0	0	0	2323	323	41	2078	0	5132
#24 Leon Road & Clinton Keith Road													
Base	0	0	0	143	0	1218	638	1950	0	0	913	877	5739
Added	0	0	0	0	0	0	0	0	0	0	0	0	0
Total	0	0	0	143	0	1218	638	1950	0	0	913	877	5739
#25 Winchester Road - SR-79 & Benton Road													
Base	462	2486	738	75	1004	485	83	704	1387	241	720	92	8477
Added	0	0	0	0	0	0	0	0	0	0	0	0	0
Total	462	2486	738	75	1004	485	83	704	1387	241	720	92	8477
#26 Winchester Road - SR-79 & Via Mira Mosa													
Base	69	3255	228	107	2094	356	229	28	54	229	40	129	6818
Added	0	0	0	0	0	0	0	0	0	0	0	0	0
Total	69	3255	228	107	2094	356	229	28	54	229	40	129	6818
#27 Monroe Ave & Los Alamos													
Base	29	469	264	235	281	61	229	1460	165	84	975	467	4719
Added	0	0	0	0	0	0	0	0	0	0	0	0	0
Total	29	469	264	235	281	61	229	1460	165	84	975	467	4719

City of Murrieta General Plan
Future Proposed General Plan
PM Peak Hour

Volume Type	Northbound Left	Northbound Thru	Northbound Right	Southbound Left	Southbound Thru	Southbound Right	Eastbound Left	Eastbound Thru	Eastbound Right	Westbound Left	Westbound Thru	Westbound Right	Total Volume
#28 Jefferson Avenue & Murrieta Hot Springs Road													
Base	6	2300	1226	814	1025	70	40	210	111	581	90	891	7364
Added	0	0	0	0	0	0	0	0	0	0	0	0	0
Total	6	2300	1226	814	1025	70	40	210	111	581	90	891	7364
#29 Madison Avenue & Murrieta Hot Springs Road													
Base	316	600	1218	342	247	116	346	1505	279	791	1185	189	7134
Added	0	0	0	0	0	0	0	0	0	0	0	0	0
Total	316	600	1218	342	247	116	346	1505	279	791	1185	189	7134
#30 I-15 SB Off-Ramp & Murrieta Hot Springs Road													
Base	0	0	0	674	0	422	0	2533	487	0	2188	112	6416
Added	0	0	0	0	0	0	0	0	0	0	0	0	0
Total	0	0	0	674	0	422	0	2533	487	0	2188	112	6416
#31 I-15 NB Off-Ramp & Murrieta Hot Springs Road													
Base	213	0	239	0	0	0	0	2848	370	0	1582	1637	6889
Added	0	0	0	0	0	0	0	0	0	0	0	0	0
Total	213	0	239	0	0	0	0	2848	370	0	1582	1637	6889
#32 I-215 SB Off-Ramp & Murrieta Hot Springs Road													
Base	0	0	0	470	0	362	0	3377	139	0	2338	238	6924
Added	0	0	0	0	0	0	0	0	0	0	0	0	0
Total	0	0	0	470	0	362	0	3377	139	0	2338	238	6924
#33 I-215 NB Off-Ramp & Murrieta Hot Springs Road													
Base	84	0	465	0	0	0	0	2331	104	0	2361	1383	6728
Added	0	0	0	0	0	0	0	0	0	0	0	0	0
Total	84	0	465	0	0	0	0	2331	104	0	2361	1383	6728
#34 Jackson Avenue & Murrieta Hot Springs Road													
Base	201	0	169	0	0	0	0	1910	59	213	2568	0	5120
Added	0	0	0	0	0	0	0	0	0	0	0	0	0
Total	201	0	169	0	0	0	0	1910	59	213	2568	0	5120
#35 Margarita Road & Murrieta Hot Springs Road													
Base	933	69	383	185	77	150	51	1752	538	273	1609	38	6058
Added	0	0	0	0	0	0	0	0	0	0	0	0	0
Total	933	69	383	185	77	150	51	1752	538	273	1609	38	6058
#36 French Valley Parkway & Murrieta Hot Springs Road													
Base	32	0	1110	0	0	0	0	1808	343	453	1697	0	5443
Added	0	0	0	0	0	0	0	0	0	0	0	0	0
Total	32	0	1110	0	0	0	0	1808	343	453	1697	0	5443

City of Murrieta General Plan
Future Proposed General Plan
PM Peak Hour

Volume Type	Northbound Left	Northbound Thru	Northbound Right	Southbound Left	Southbound Thru	Southbound Right	Eastbound Left	Eastbound Thru	Eastbound Right	Westbound Left	Westbound Thru	Westbound Right	Total Volume
#37 Jefferson Avenue & Guava Street													
Base	14	3281	10	11	1174	349	103	86	133	2	71	16	5250
Added	0	0	0	0	0	0	0	0	0	0	0	0	0
Total	14	3281	10	11	1174	349	103	86	133	2	71	16	5250
#38 Jefferson Avenue & Cherry Street													
Base	0	0	0	0	0	0	0	0	0	0	0	0	0
Added	0	0	0	0	0	0	0	0	0	0	0	0	0
Total	0	0	0	0	0	0	0	0	0	0	0	0	0
#39 Washington Ave & Calle Del Oso Oro/Nutmeg													
Base	421	306	134	93	236	55	28	209	276	164	635	163	2720
Added	0	0	0	0	0	0	0	0	0	0	0	0	0
Total	421	306	134	93	236	55	28	209	276	164	635	163	2720
#40 Clinton Keith Rd & Calle de Oso Oro/Bear Creek Dr													
Base	80	179	208	16	90	271	187	520	142	226	747	9	2675
Added	0	0	0	0	0	0	0	0	0	0	0	0	0
Total	80	179	208	16	90	271	187	520	142	226	747	9	2675
#41 Jefferson Ave & Nutmeg St													
Base	0	0	0	0	0	0	0	0	0	0	0	0	0
Added	0	0	0	0	0	0	0	0	0	0	0	0	0
Total	0	0	0	0	0	0	0	0	0	0	0	0	0
#42 Jefferson Ave & Magnolia St													
Base	0	0	0	0	0	0	0	0	0	0	0	0	0
Added	0	0	0	0	0	0	0	0	0	0	0	0	0
Total	0	0	0	0	0	0	0	0	0	0	0	0	0
#43 Jefferson Ave & Lemon St													
Base	418	2124	2	5	1607	38	42	39	270	16	21	13	4595
Added	0	0	0	0	0	0	0	0	0	0	0	0	0
Total	418	2124	2	5	1607	38	42	39	270	16	21	13	4595
#44 Jefferson Ave & Kalmia St													
Base	412	1763	951	978	1203	34	34	658	281	313	533	869	8029
Added	0	0	0	0	0	0	0	0	0	0	0	0	0
Total	412	1763	951	978	1203	34	34	658	281	313	533	869	8029
#45 Jefferson Ave & Juniper St													
Base	192	2787	67	48	1603	98	338	90	378	18	72	82	5773
Added	0	0	0	0	0	0	0	0	0	0	0	0	0
Total	192	2787	67	48	1603	98	338	90	378	18	72	82	5773

City of Murrieta General Plan
Future Proposed General Plan
PM Peak Hour

Volume Type	Northbound Left	Thru	Right	Southbound Left	Thru	Right	Eastbound Left	Thru	Right	Westbound Left	Thru	Right	Total Volume
#46 Jefferson Ave & Ivy St/Los Alamos Rd													
Base	312	2389	685	457	1448	113	90	224	187	259	274	494	6932
Added	0	0	0	0	0	0	0	0	0	0	0	0	0
Total	312	2389	685	457	1448	113	90	224	187	259	274	494	6932
#47 Madison Ave & Kalmia St													
Base	0	0	0	0	0	0	0	0	0	0	0	0	0
Added	0	0	0	0	0	0	0	0	0	0	0	0	0
Total	0	0	0	0	0	0	0	0	0	0	0	0	0
#48 Madison Ave/I-15 SB Ramps & Kalmia St													
Base	392	0	898	306	27	379	0	2534	265	265	1505	614	7185
Added	0	0	0	0	0	0	0	0	0	0	0	0	0
Total	392	0	898	306	27	379	0	2534	265	265	1505	614	7185
#49 Monroe Ave & Murrieta Hot Springs Rd													
Base	0	0	0	0	0	0	0	0	0	0	0	0	0
Added	0	0	0	0	0	0	0	0	0	0	0	0	0
Total	0	0	0	0	0	0	0	0	0	0	0	0	0
#50 Hancock Ave & Murrieta Hot Springs Rd													
Base	0	0	0	598	0	820	755	3291	0	0	2482	311	8257
Added	0	0	0	0	0	0	0	0	0	0	0	0	0
Total	0	0	0	598	0	820	755	3291	0	0	2482	311	8257
#51 Alta Murrieta Dr & Murrieta Hot Springs Rd													
Base	587	221	53	195	128	493	698	1702	518	173	2320	153	7241
Added	0	0	0	0	0	0	0	0	0	0	0	0	0
Total	587	221	53	195	128	493	698	1702	518	173	2320	153	7241
#52 Winchester Road - SR-79 & Murrieta Hot Springs Rd													
Base	334	1970	195	195	1162	1115	1478	1036	280	244	754	99	8862
Added	0	0	0	0	0	0	0	0	0	0	0	0	0
Total	334	1970	195	195	1162	1115	1478	1036	280	244	754	99	8862
#53 Hancock Ave & Los Alamos Rd													
Base	124	438	871	657	115	26	105	1967	46	538	1361	703	6951
Added	0	0	0	0	0	0	0	0	0	0	0	0	0
Total	124	438	871	657	115	26	105	1967	46	538	1361	703	6951
#54 I-215 SB Ramps & Los Alamos Rd													
Base	0	0	0	537	0	1534	0	3121	446	146	1263	0	7047
Added	0	0	0	0	0	0	0	0	0	0	0	0	0
Total	0	0	0	537	0	1534	0	3121	446	146	1263	0	7047

City of Murrieta General Plan
Future Proposed General Plan
PM Peak Hour

Volume Type	Northbound Left	Thru	Right	Southbound Left	Thru	Right	Eastbound Left	Thru	Right	Westbound Left	Thru	Right	Total Volume
#55 I-215 NB Ramps & Los Alamos Rd													
Base	229	0	171	0	0	0	1589	1996	0	0	1182	331	5498
Added	0	0	0	0	0	0	0	0	0	0	0	0	0
Total	229	0	171	0	0	0	1589	1996	0	0	1182	331	5498
#56 Whitewood Rd & Los Alamos Rd													
Base	139	582	34	35	578	567	867	361	298	65	228	48	3802
Added	0	0	0	0	0	0	0	0	0	0	0	0	0
Total	139	582	34	35	578	567	867	361	298	65	228	48	3802
#57 Whitewood Rd & Murrieta Hot Springs Rd													
Base	434	314	529	362	266	233	166	1645	172	401	2240	457	7219
Added	0	0	0	0	0	0	0	0	0	0	0	0	0
Total	434	314	529	362	266	233	166	1645	172	401	2240	457	7219
#58 Adams Ave & Guava St													
Base	0	0	0	0	0	0	0	0	0	0	0	0	0
Added	0	0	0	0	0	0	0	0	0	0	0	0	0
Total	0	0	0	0	0	0	0	0	0	0	0	0	0
#59 Nutmeg St & Clinton Keith Rd													
Base	65	83	494	318	32	58	92	1775	61	552	2056	380	5966
Added	0	0	0	0	0	0	0	0	0	0	0	0	0
Total	65	83	494	318	32	58	92	1775	61	552	2056	380	5966
#60 Murrieta Oaks Ave-Mitchell Rd & Clinton Keith Rd													
Base	16	134	19	103	180	900	135	3159	18	27	2766	395	7852
Added	0	0	0	0	0	0	0	0	0	0	0	0	0
Total	16	134	19	103	180	900	135	3159	18	27	2766	395	7852
#61 I-215 SB Ramps & Scott Rd													
Base	0	0	0	160	0	261	0	756	392	0	1529	445	3543
Added	0	0	0	0	0	0	0	0	0	0	0	0	0
Total	0	0	0	160	0	261	0	756	392	0	1529	445	3543
#62 I-215 NB Ramps & Scott Rd													
Base	0	7	963	0	0	368	80	1012	0	0	1761	395	4586
Added	0	0	0	0	0	0	0	0	0	0	0	0	0
Total	0	7	963	0	0	368	80	1012	0	0	1761	395	4586
#102 Leon Road & Scott Road													
Base	563	411	18	63	209	373	580	525	505	4	374	155	3780
Added	0	0	0	0	0	0	0	0	0	0	0	0	0
Total	563	411	18	63	209	373	580	525	505	4	374	155	3780

City of Murrieta General Plan
Future Proposed General Plan
PM Peak Hour

Volume Type	Northbound Left	Northbound Thru	Northbound Right	Southbound Left	Southbound Thru	Southbound Right	Eastbound Left	Eastbound Thru	Eastbound Right	Westbound Left	Westbound Thru	Westbound Right	Total Volume
#104 Antelope Road & Keller Road													
Base	923	556	870	74	72	563	828	753	209	228	658	167	5901
Added	0	0	0	0	0	0	0	0	0	0	0	0	0
Total	923	556	870	74	72	563	828	753	209	228	658	167	5901
#105 Menifee Road - Meadowlark Road & Keller Road													
Base	174	1077	822	86	680	363	765	314	468	176	392	121	5438
Added	0	0	0	0	0	0	0	0	0	0	0	0	0
Total	174	1077	822	86	680	363	765	314	468	176	392	121	5438
#107 Leon Road & Keller Road													
Base	62	926	1	1	688	78	88	81	281	17	190	3	2416
Added	0	0	0	0	0	0	0	0	0	0	0	0	0
Total	62	926	1	1	688	78	88	81	281	17	190	3	2416
#108 Winchester Road - SR-79 & Keller Road													
Base	1	2693	28	9	2103	1	2	59	2	10	16	25	4949
Added	0	0	0	0	0	0	0	0	0	0	0	0	0
Total	1	2693	28	9	2103	1	2	59	2	10	16	25	4949
#112 Leon Road & Jean Nicholas													
Base	2	530	263	327	553	11	2	128	12	114	123	446	2511
Added	0	0	0	0	0	0	0	0	0	0	0	0	0
Total	2	530	263	327	553	11	2	128	12	114	123	446	2511
#122 Meadowlark Lane - Whitewood Road & Clinton Keith Road													
Base	748	337	589	767	412	730	352	1452	506	314	701	1031	7939
Added	0	0	0	0	0	0	0	0	0	0	0	0	0
Total	748	337	589	767	412	730	352	1452	506	314	701	1031	7939
#138 Jefferson Avenue & Cherry Street													
Base	29	1226	823	196	861	6	2	1060	40	122	793	666	5824
Added	0	0	0	0	0	0	0	0	0	0	0	0	0
Total	29	1226	823	196	861	6	2	1060	40	122	793	666	5824
#141 Jefferson Ave & Nutmeg St													
Base	624	1208	377	103	1155	97	61	133	249	300	223	145	4675
Added	0	0	0	0	0	0	0	0	0	0	0	0	0
Total	624	1208	377	103	1155	97	61	133	249	300	223	145	4675
#142 Jefferson Ave & Magnolia St													
Base	137	2070	11	10	1578	106	159	5	56	7	5	14	4158
Added	0	0	0	0	0	0	0	0	0	0	0	0	0
Total	137	2070	11	10	1578	106	159	5	56	7	5	14	4158

City of Murrieta General Plan
Future Proposed General Plan
PM Peak Hour

Volume Type	Northbound Left	Northbound Thru	Northbound Right	Southbound Left	Southbound Thru	Southbound Right	Eastbound Left	Eastbound Thru	Eastbound Right	Westbound Left	Westbound Thru	Westbound Right	Total Volume
#149 Monroe Ave & Murrieta Hot Springs Rd													
Base	178	236	199	1	239	110	164	2579	154	37	2043	26	5966
Added	0	0	0	0	0	0	0	0	0	0	0	0	0
Total	178	236	199	1	239	110	164	2579	154	37	2043	26	5966
#158 Adams Ave & Guava St													
Base	37	222	27	91	39	205	59	243	181	8	261	165	1538
Added	0	0	0	0	0	0	0	0	0	0	0	0	0
Total	37	222	27	91	39	205	59	243	181	8	261	165	1538

City of Murrieta General Plan
Future Proposed General Plan
PM Peak Hour

Impact Analysis Report
Level Of Service

Intersection	Base LOS	Base Del/Veh	Base V/C	Future LOS	Future Del/Veh	Future V/C	Change in V/C	
# 1 Menifee Road & Scott Road	C	31.2	0.844	C	31.2	0.844	+ 0.000	D/V
# 3 Winchester Road/SR-79 & Scott	F	187.8	1.529	F	187.8	1.529	+ 0.000	D/V
# 6 Briggs Road & Keller Road	B	13.7	0.528	B	13.7	0.528	+ 0.000	D/V
# 9 Antelope Road & Golden City Dr	E	55.2	1.150	E	55.2	1.150	+ 0.000	D/V
# 10 Whitewood Roa - /Meadowlark Ro	F	108.0	1.359	F	108.0	1.359	+ 0.000	D/V
# 14 Antelope Road & Linnel Lane Ex	C	23.4	0.677	C	23.4	0.677	+ 0.000	D/V
# 15 Whitewood Road - Meadowlark Ro	D	38.7	0.968	D	38.7	0.968	+ 0.000	D/V
# 28 Jefferson Avenue & Murrieta Ho	F	115.8	1.250	F	115.8	1.250	+ 0.000	D/V
# 29 Madison Avenue & Murrieta Hot	D	51.1	1.016	D	51.1	1.016	+ 0.000	D/V
# 44 Jefferson Ave & Kalmia St	F	158.5	1.688	F	158.5	1.688	+ 0.000	D/V
# 46 Jefferson Ave & Ivy St/Los Ala	D	36.5	0.947	D	36.5	0.947	+ 0.000	D/V
# 57 Whitewood Rd & Murrieta Hot Sp	D	51.6	1.014	D	51.6	1.014	+ 0.000	D/V
#102 Leon Road & Scott Road	C	32.5	0.817	C	32.5	0.817	+ 0.000	D/V

City of Murrieta General Plan
Future Proposed General Plan
PM Peak Hour

Level Of Service Computation Report
2000 HCM Operations Method (Future Volume Alternative)

Intersection #1 Menifee Road & Scott Road

Cycle (sec): 100 Critical Vol./Cap.(X): 0.844
Loss Time (sec): 0 (Y+R=4.0 sec) Average Delay (sec/veh): 31.2
Optimal Cycle: 146 Level Of Service: C

Street Name:	Menifee Rd						Scott Rd					
Approach:	North Bound			South Bound			East Bound			West Bound		
Movement:	L	T	R	L	T	R	L	T	R	L	T	R
Control:	Protected			Protected			Protected			Protected		
Rights:	Ovl			Ovl			Ovl			Ovl		
Min. Green:	0	0	0	0	0	0	0	0	0	0	0	0
Lanes:	1 0	2 0	1	1 0	2 0	1	2 0	3 0	1	2 0	3 0	1
Volume Module:												
Base Vol:	291	672	860	196	284	99	272	967	458	408	546	566
Growth Adj:	1.00	1.00	1.00	1.00	1.00	1.00	1.00	1.00	1.00	1.00	1.00	1.00
Initial Bse:	291	672	860	196	284	99	272	967	458	408	546	566
Added Vol:	0	0	0	0	0	0	0	0	0	0	0	0
PasserByVol:	0	0	0	0	0	0	0	0	0	0	0	0
Initial Fut:	291	672	860	196	284	99	272	967	458	408	546	566
User Adj:	1.00	1.00	1.00	1.00	1.00	1.00	1.00	1.00	1.00	1.00	1.00	1.00
PHF Adj:	1.00	1.00	1.00	1.00	1.00	1.00	1.00	1.00	1.00	1.00	1.00	1.00
PHF Volume:	291	672	860	196	284	99	272	967	458	408	546	566
Reduct Vol:	0	0	0	0	0	0	0	0	0	0	0	0
Reduced Vol:	291	672	860	196	284	99	272	967	458	408	546	566
PCE Adj:	1.00	1.00	1.00	1.00	1.00	1.00	1.00	1.00	1.00	1.00	1.00	1.00
MLF Adj:	1.00	1.00	1.00	1.00	1.00	1.00	1.00	1.00	1.00	1.00	1.00	1.00
FinalVolume:	291	672	860	196	284	99	272	967	458	408	546	566
Saturation Flow Module:												
Sat/Lane:	1900	1900	1900	1900	1900	1900	1900	1900	1900	1900	1900	1900
Adjustment:	0.95	0.95	0.85	0.95	0.95	0.85	0.92	0.91	0.85	0.92	0.91	0.85
Lanes:	1.00	2.00	1.00	1.00	2.00	1.00	2.00	3.00	1.00	2.00	3.00	1.00
Final Sat.:	1805	3610	1615	1805	3610	1615	3502	5187	1615	3502	5187	1615
Capacity Analysis Module:												
Vol/Sat:	0.16	0.19	0.53	0.11	0.08	0.06	0.08	0.19	0.28	0.12	0.11	0.35
Crit Moves:			****	****			****					****
Green/Cycle:	0.42	0.49	0.64	0.13	0.20	0.30	0.09	0.23	0.65	0.15	0.29	0.42
Volume/Cap:	0.39	0.38	0.83	0.84	0.39	0.21	0.84	0.80	0.44	0.80	0.37	0.84
Delay/Veh:	20.5	15.9	20.0	66.2	34.7	26.6	62.8	40.1	8.8	50.1	28.6	35.9
User DelAdj:	1.00	1.00	1.00	1.00	1.00	1.00	1.00	1.00	1.00	1.00	1.00	1.00
AdjDel/Veh:	20.5	15.9	20.0	66.2	34.7	26.6	62.8	40.1	8.8	50.1	28.6	35.9
LOS by Move:	C	B	B	E	C	C	E	D	A	D	C	D
HCM2kAvgQ:	6	7	23	9	4	2	7	12	7	8	5	18

Note: Queue reported is the number of cars per lane.

City of Murrieta General Plan
Future Proposed General Plan
PM Peak Hour

Level Of Service Computation Report
2000 HCM Operations Method (Future Volume Alternative)

Intersection #3 Winchester Road/SR-79 & Scott Road

Cycle (sec): 100 Critical Vol./Cap.(X): 1.529
Loss Time (sec): 0 (Y+R=4.0 sec) Average Delay (sec/veh): 187.8
Optimal Cycle: 180 Level Of Service: F

Street Name:	Winchester Road/SR-79						Scott Road					
Approach:	North Bound			South Bound			East Bound			West Bound		
Movement:	L -	T -	R	L -	T -	R	L -	T -	R	L -	T -	R
Control:	Protected			Protected			Protected			Protected		
Rights:	Include			Include			Include			Include		
Min. Green:	0	0	0	0	0	0	0	0	0	0	0	0
Lanes:	1 0	2 1	0	2 0	2 1	0	1 0	2 1	0	1 0	3 0	1
Volume Module:												
Base Vol:	126	2492	29	1119	1872	128	113	286	119	0	222	1066
Growth Adj:	1.00	1.00	1.00	1.00	1.00	1.00	1.00	1.00	1.00	1.00	1.00	1.00
Initial Bse:	126	2492	29	1119	1872	128	113	286	119	0	222	1066
Added Vol:	0	0	0	0	0	0	0	0	0	0	0	0
PasserByVol:	0	0	0	0	0	0	0	0	0	0	0	0
Initial Fut:	126	2492	29	1119	1872	128	113	286	119	0	222	1066
User Adj:	1.00	1.00	1.00	1.00	1.00	1.00	1.00	1.00	1.00	1.00	1.00	1.00
PHF Adj:	1.00	1.00	1.00	1.00	1.00	1.00	1.00	1.00	1.00	1.00	1.00	1.00
PHF Volume:	126	2492	29	1119	1872	128	113	286	119	0	222	1066
Reduct Vol:	0	0	0	0	0	0	0	0	0	0	0	0
Reduced Vol:	126	2492	29	1119	1872	128	113	286	119	0	222	1066
PCE Adj:	1.00	1.00	1.00	1.00	1.00	1.00	1.00	1.00	1.00	1.00	1.00	1.00
MLF Adj:	1.00	1.00	1.00	1.00	1.00	1.00	1.00	1.00	1.00	1.00	1.00	1.00
FinalVolume:	126	2492	29	1119	1872	128	113	286	119	0	222	1066
Saturation Flow Module:												
Sat/Lane:	1900	1900	1900	1900	1900	1900	1900	1900	1900	1900	1900	1900
Adjustment:	0.95	0.91	0.91	0.92	0.90	0.90	0.95	0.87	0.87	1.00	0.91	0.85
Lanes:	1.00	2.97	0.03	2.00	2.81	0.19	1.00	2.12	0.88	1.00	3.00	1.00
Final Sat.:	1805	5117	60	3502	4806	329	1805	3502	1457	1900	5187	1615
Capacity Analysis Module:												
Vol/Sat:	0.07	0.49	0.49	0.32	0.39	0.39	0.06	0.08	0.08	0.00	0.04	0.66
Crit Moves:		****		****			****					****
Green/Cycle:	0.08	0.32	0.32	0.21	0.45	0.45	0.04	0.47	0.47	0.00	0.43	0.43
Volume/Cap:	0.87	1.53	1.53	1.53	0.87	0.87	1.53	0.17	0.17	0.00	0.10	1.53
Delay/Veh:	85.1	275	275.3	284.6	28.9	28.9	342.9	15.2	15.2	0.0	16.9	273.8
User DelAdj:	1.00	1.00	1.00	1.00	1.00	1.00	1.00	1.00	1.00	1.00	1.00	1.00
AdjDel/Veh:	85.1	275	275.3	284.6	28.9	28.9	342.9	15.2	15.2	0.0	16.9	273.8
LOS by Move:	F	F	F	F	C	C	F	B	B	A	B	F
HCM2kAvgQ:	6	68	68	44	23	23	10	3	3	0	1	78

Note: Queue reported is the number of cars per lane.

City of Murrieta General Plan
Future Proposed General Plan
PM Peak Hour

Level Of Service Computation Report
2000 HCM Operations Method (Future Volume Alternative)

Intersection #6 Briggs Road & Keller Road

Cycle (sec): 100 Critical Vol./Cap.(X): 0.528
Loss Time (sec): 0 (Y+R=4.0 sec) Average Delay (sec/veh): 13.7
Optimal Cycle: 48 Level Of Service: B

Street Name:	Briggs Road						Keller Road					
Approach:	North Bound			South Bound			East Bound			West Bound		
Movement:	L -	T -	R	L -	T -	R	L -	T -	R	L -	T -	R
Control:	Protected			Protected			Protected			Protected		
Rights:	Include			Include			Ovl			Include		
Min. Green:	0	0	0	0	0	0	0	0	0	0	0	0
Lanes:	1 0	1 1	0	1 0	1 1	0	1 0	2 0	1	1 0	1 1	0
Volume Module:												
Base Vol:	300	122	105	1	50	81	20	347	765	9	295	6
Growth Adj:	1.00	1.00	1.00	1.00	1.00	1.00	1.00	1.00	1.00	1.00	1.00	1.00
Initial Bse:	300	122	105	1	50	81	20	347	765	9	295	6
Added Vol:	0	0	0	0	0	0	0	0	0	0	0	0
PasserByVol:	0	0	0	0	0	0	0	0	0	0	0	0
Initial Fut:	300	122	105	1	50	81	20	347	765	9	295	6
User Adj:	1.00	1.00	1.00	1.00	1.00	1.00	1.00	1.00	1.00	1.00	1.00	1.00
PHF Adj:	1.00	1.00	1.00	1.00	1.00	1.00	1.00	1.00	1.00	1.00	1.00	1.00
PHF Volume:	300	122	105	1	50	81	20	347	765	9	295	6
Reduct Vol:	0	0	0	0	0	0	0	0	0	0	0	0
Reduced Vol:	300	122	105	1	50	81	20	347	765	9	295	6
PCE Adj:	1.00	1.00	1.00	1.00	1.00	1.00	1.00	1.00	1.00	1.00	1.00	1.00
MLF Adj:	1.00	1.00	1.00	1.00	1.00	1.00	1.00	1.00	1.00	1.00	1.00	1.00
FinalVolume:	300	122	105	1	50	81	20	347	765	9	295	6
Saturation Flow Module:												
Sat/Lane:	1900	1900	1900	1900	1900	1900	1900	1900	1900	1900	1900	1900
Adjustment:	0.95	0.88	0.88	0.95	0.86	0.86	0.95	0.95	0.85	0.95	0.95	0.95
Lanes:	1.00	1.07	0.93	1.00	1.00	1.00	1.00	2.00	1.00	1.00	1.96	0.04
Final Sat.:	1805	1806	1555	1805	1637	1637	1805	3610	1615	1805	3527	72
Capacity Analysis Module:												
Vol/Sat:	0.17	0.07	0.07	0.00	0.03	0.05	0.01	0.10	0.47	0.00	0.08	0.08
Crit Moves:	****					****			****	****		
Green/Cycle:	0.31	0.41	0.41	0.00	0.09	0.09	0.07	0.58	0.90	0.01	0.52	0.52
Volume/Cap:	0.53	0.17	0.17	0.17	0.33	0.53	0.16	0.17	0.53	0.53	0.16	0.16
Delay/Veh:	29.1	19.0	19.0	62.5	42.8	45.3	44.4	9.7	1.4	77.0	12.5	12.5
User DelAdj:	1.00	1.00	1.00	1.00	1.00	1.00	1.00	1.00	1.00	1.00	1.00	1.00
AdjDel/Veh:	29.1	19.0	19.0	62.5	42.8	45.3	44.4	9.7	1.4	77.0	12.5	12.5
LOS by Move:	C	B	B	E	D	D	D	A	A	E	B	B
HCM2kAvgQ:	8	2	2	0	2	3	1	3	5	1	2	2

Note: Queue reported is the number of cars per lane.

City of Murrieta General Plan
Future Proposed General Plan
PM Peak Hour

Level Of Service Computation Report
2000 HCM Operations Method (Future Volume Alternative)

Intersection #9 Antelope Road & Golden City Drive - Baxter Road

Cycle (sec): 100 Critical Vol./Cap.(X): 1.150
Loss Time (sec): 0 (Y+R=4.0 sec) Average Delay (sec/veh): 55.2
Optimal Cycle: 180 Level Of Service: E

Street Name:	Antelope Road						Golden City Drive - Baxter Road					
Approach:	North Bound			South Bound			East Bound			West Bound		
Movement:	L -	T -	R	L -	T -	R	L -	T -	R	L -	T -	R
Control:	Permitted			Permitted			Permitted			Permitted		
Rights:	Include			Include			Include			Include		
Min. Green:	0	0	0	0	0	0	0	0	0	0	0	0
Lanes:	1 0	2 0	1	1 0	1 1	0	1 0	1 1	0	1 0	1 1	0
Volume Module:												
Base Vol:	4	428	941	216	974	25	5	202	46	354	178	896
Growth Adj:	1.00	1.00	1.00	1.00	1.00	1.00	1.00	1.00	1.00	1.00	1.00	1.00
Initial Bse:	4	428	941	216	974	25	5	202	46	354	178	896
Added Vol:	0	0	0	0	0	0	0	0	0	0	0	0
PasserByVol:	0	0	0	0	0	0	0	0	0	0	0	0
Initial Fut:	4	428	941	216	974	25	5	202	46	354	178	896
User Adj:	1.00	1.00	1.00	1.00	1.00	1.00	1.00	1.00	1.00	1.00	1.00	1.00
PHF Adj:	1.00	1.00	1.00	1.00	1.00	1.00	1.00	1.00	1.00	1.00	1.00	1.00
PHF Volume:	4	428	941	216	974	25	5	202	46	354	178	896
Reduct Vol:	0	0	0	0	0	0	0	0	0	0	0	0
Reduced Vol:	4	428	941	216	974	25	5	202	46	354	178	896
PCE Adj:	1.00	1.00	1.00	1.00	1.00	1.00	1.00	1.00	1.00	1.00	1.00	1.00
MLF Adj:	1.00	1.00	1.00	1.00	1.00	1.00	1.00	1.00	1.00	1.00	1.00	1.00
FinalVolume:	4	428	941	216	974	25	5	202	46	354	178	896
Saturation Flow Module:												
Sat/Lane:	1900	1900	1900	1900	1900	1900	1900	1900	1900	1900	1900	1900
Adjustment:	0.17	0.95	0.85	0.43	0.95	0.95	0.14	0.92	0.92	0.54	0.83	0.83
Lanes:	1.00	2.00	1.00	1.00	1.95	0.05	1.00	1.63	0.37	1.00	1.00	1.00
Final Sat.:	327	3610	1615	817	3506	90	268	2858	651	1034	1579	1579
Capacity Analysis Module:												
Vol/Sat:	0.01	0.12	0.58	0.26	0.28	0.28	0.02	0.07	0.07	0.34	0.11	0.57
Crit Moves:			****									****
Green/Cycle:	0.51	0.51	0.51	0.51	0.51	0.51	0.49	0.49	0.49	0.49	0.49	0.49
Volume/Cap:	0.02	0.23	1.15	0.52	0.55	0.55	0.04	0.14	0.14	0.69	0.23	1.15
Delay/Veh:	12.4	13.9	106.1	17.7	17.2	17.2	13.2	13.9	13.9	23.7	14.5	105.3
User DelAdj:	1.00	1.00	1.00	1.00	1.00	1.00	1.00	1.00	1.00	1.00	1.00	1.00
AdjDel/Veh:	12.4	13.9	106.1	17.7	17.2	17.2	13.2	13.9	13.9	23.7	14.5	105.3
LOS by Move:	B	B	F	B	B	B	B	B	B	C	B	F
HCM2kAvgQ:	0	4	47	5	11	11	0	2	2	10	3	47

Note: Queue reported is the number of cars per lane.

City of Murrieta General Plan
Future Proposed General Plan
PM Peak Hour

Level Of Service Computation Report
2000 HCM Operations Method (Future Volume Alternative)

Intersection #10 Whitewood Roa - /Meadowlark Road & Golden City Drive - Baxter R

Cycle (sec): 100 Critical Vol./Cap.(X): 1.359
Loss Time (sec): 0 (Y+R=4.0 sec) Average Delay (sec/veh): 108.0
Optimal Cycle: 180 Level Of Service: F

Street Name:	Whitewood Road - Meadowlark Road						Golden City Drive - Baxter Road					
Approach:	North Bound			South Bound			East Bound			West Bound		
Movement:	L -	T -	R	L -	T -	R	L -	T -	R	L -	T -	R
Control:	Protected			Protected			Protected			Protected		
Rights:	Include			Include			Include			Include		
Min. Green:	0	0	0	0	0	0	0	0	0	0	0	0
Lanes:	1 0	1 1	0	1 0	2 0	1	1 0	1 0	1	1 0	1 1	0
Volume Module:												
Base Vol:	280	1410	3	0	596	978	319	12	967	0	7	2
Growth Adj:	1.00	1.00	1.00	1.00	1.00	1.00	1.00	1.00	1.00	1.00	1.00	1.00
Initial Bse:	280	1410	3	0	596	978	319	12	967	0	7	2
Added Vol:	0	0	0	0	0	0	0	0	0	0	0	0
PasserByVol:	0	0	0	0	0	0	0	0	0	0	0	0
Initial Fut:	280	1410	3	0	596	978	319	12	967	0	7	2
User Adj:	1.00	1.00	1.00	1.00	1.00	1.00	1.00	1.00	1.00	1.00	1.00	1.00
PHF Adj:	1.00	1.00	1.00	1.00	1.00	1.00	1.00	1.00	1.00	1.00	1.00	1.00
PHF Volume:	280	1410	3	0	596	978	319	12	967	0	7	2
Reduct Vol:	0	0	0	0	0	0	0	0	0	0	0	0
Reduced Vol:	280	1410	3	0	596	978	319	12	967	0	7	2
PCE Adj:	1.00	1.00	1.00	1.00	1.00	1.00	1.00	1.00	1.00	1.00	1.00	1.00
MLF Adj:	1.00	1.00	1.00	1.00	1.00	1.00	1.00	1.00	1.00	1.00	1.00	1.00
FinalVolume:	280	1410	3	0	596	978	319	12	967	0	7	2
Saturation Flow Module:												
Sat/Lane:	1900	1900	1900	1900	1900	1900	1900	1900	1900	1900	1900	1900
Adjustment:	0.95	0.95	0.95	1.00	0.95	0.85	0.95	1.00	0.85	1.00	0.92	0.92
Lanes:	1.00	1.99	0.01	1.00	2.00	1.00	1.00	1.00	1.00	1.00	1.56	0.44
Final Sat.:	1805	3602	8	1900	3610	1615	1805	1900	1615	1900	2715	776
Capacity Analysis Module:												
Vol/Sat:	0.16	0.39	0.39	0.00	0.17	0.61	0.18	0.01	0.60	0.00	0.00	0.00
Crit Moves:	****					****			****	****		
Green/Cycle:	0.11	0.56	0.56	0.00	0.45	0.45	0.43	0.44	0.44	0.00	0.01	0.01
Volume/Cap:	1.36	0.70	0.70	0.00	0.37	1.36	0.41	0.01	1.36	0.00	0.41	0.41
Delay/Veh:	234.2	17.0	17.0	0.0	18.6	198.4	19.8	15.8	198.8	0.0	61.3	61.3
User DelAdj:	1.00	1.00	1.00	1.00	1.00	1.00	1.00	1.00	1.00	1.00	1.00	1.00
AdjDel/Veh:	234.2	17.0	17.0	0.0	18.6	198.4	19.8	15.8	198.8	0.0	61.3	61.3
LOS by Move:	F	B	B	A	B	F	B	B	F	A	E	E
HCM2kAvgQ:	20	17	17	0	6	63	7	0	62	0	1	1

Note: Queue reported is the number of cars per lane.

City of Murrieta General Plan
Future Proposed General Plan
PM Peak Hour

Level Of Service Computation Report
2000 HCM Operations Method (Future Volume Alternative)

Intersection #14 Antelope Road & Linnel Lane Extension

Cycle (sec): 100 Critical Vol./Cap.(X): 0.677
Loss Time (sec): 0 (Y+R=4.0 sec) Average Delay (sec/veh): 23.4
Optimal Cycle: 71 Level Of Service: C

Street Name:	Antelope Road						Linnel Lane Extension					
Approach:	North Bound			South Bound			East Bound			West Bound		
Movement:	L	T	R	L	T	R	L	T	R	L	T	R
Control:	Protected			Protected			Protected			Protected		
Rights:	Include			Include			Include			Include		
Min. Green:	0	0	0	0	0	0	0	0	0	0	0	0
Lanes:	1 0	2 0	1	1 0	2 0	1	1 0	2 0	1	1 0	2 0	1
Volume Module:												
Base Vol:	42	637	99	49	1075	525	117	363	394	58	562	426
Growth Adj:	1.00	1.00	1.00	1.00	1.00	1.00	1.00	1.00	1.00	1.00	1.00	1.00
Initial Bse:	42	637	99	49	1075	525	117	363	394	58	562	426
Added Vol:	0	0	0	0	0	0	0	0	0	0	0	0
PasserByVol:	0	0	0	0	0	0	0	0	0	0	0	0
Initial Fut:	42	637	99	49	1075	525	117	363	394	58	562	426
User Adj:	1.00	1.00	1.00	1.00	1.00	1.00	1.00	1.00	1.00	1.00	1.00	1.00
PHF Adj:	1.00	1.00	1.00	1.00	1.00	1.00	1.00	1.00	1.00	1.00	1.00	1.00
PHF Volume:	42	637	99	49	1075	525	117	363	394	58	562	426
Reduct Vol:	0	0	0	0	0	0	0	0	0	0	0	0
Reduced Vol:	42	637	99	49	1075	525	117	363	394	58	562	426
PCE Adj:	1.00	1.00	1.00	1.00	1.00	1.00	1.00	1.00	1.00	1.00	1.00	1.00
MLF Adj:	1.00	1.00	1.00	1.00	1.00	1.00	1.00	1.00	1.00	1.00	1.00	1.00
FinalVolume:	42	637	99	49	1075	525	117	363	394	58	562	426
Saturation Flow Module:												
Sat/Lane:	1900	1900	1900	1900	1900	1900	1900	1900	1900	1900	1900	1900
Adjustment:	0.95	0.95	0.85	0.95	0.95	0.85	0.95	0.95	0.85	0.95	0.95	0.85
Lanes:	1.00	2.00	1.00	1.00	2.00	1.00	1.00	2.00	1.00	1.00	2.00	1.00
Final Sat.:	1805	3610	1615	1805	3610	1615	1805	3610	1615	1805	3610	1615
Capacity Analysis Module:												
Vol/Sat:	0.02	0.18	0.06	0.03	0.30	0.33	0.06	0.10	0.24	0.03	0.16	0.26
Crit Moves:	****					****	****					****
Green/Cycle:	0.03	0.45	0.45	0.07	0.48	0.48	0.10	0.43	0.43	0.06	0.39	0.39
Volume/Cap:	0.68	0.40	0.14	0.40	0.62	0.68	0.68	0.23	0.57	0.57	0.40	0.68
Delay/Veh:	73.7	18.8	16.4	46.7	19.9	22.4	54.0	18.2	22.7	53.4	22.2	28.3
User DelAdj:	1.00	1.00	1.00	1.00	1.00	1.00	1.00	1.00	1.00	1.00	1.00	1.00
AdjDel/Veh:	73.7	18.8	16.4	46.7	19.9	22.4	54.0	18.2	22.7	53.4	22.2	28.3
LOS by Move:	E	B	B	D	B	C	D	B	C	D	C	C
HCM2kAvgQ:	3	7	2	2	13	13	5	4	10	3	7	12

Note: Queue reported is the number of cars per lane.

City of Murrieta General Plan
Future Proposed General Plan
PM Peak Hour

Level Of Service Computation Report
2000 HCM Operations Method (Future Volume Alternative)

Intersection #15 Whitewood Road - Meadowlark Road & Linnel Lane Extension

Cycle (sec): 100 Critical Vol./Cap.(X): 0.968
Loss Time (sec): 0 (Y+R=4.0 sec) Average Delay (sec/veh): 38.7
Optimal Cycle: 180 Level Of Service: D

Street Name:	Whitewood Road - Meadowlark Road						Linnel Lane Extension (Future)					
Approach:	North Bound			South Bound			East Bound			West Bound		
Movement:	L	T	R	L	T	R	L	T	R	L	T	R
Control:	Protected			Protected			Protected			Protected		
Rights:	Include			Include			Include			Include		
Min. Green:	0	0	0	0	0	0	0	0	0	0	0	0
Lanes:	1 0	2 0	1	1 0	1 1	0	1 0	1 1	0	1 0	2 0	1
Volume Module:												
Base Vol:	41	819	636	143	1315	229	22	335	154	223	775	779
Growth Adj:	1.00	1.00	1.00	1.00	1.00	1.00	1.00	1.00	1.00	1.00	1.00	1.00
Initial Bse:	41	819	636	143	1315	229	22	335	154	223	775	779
Added Vol:	0	0	0	0	0	0	0	0	0	0	0	0
PasserByVol:	0	0	0	0	0	0	0	0	0	0	0	0
Initial Fut:	41	819	636	143	1315	229	22	335	154	223	775	779
User Adj:	1.00	1.00	1.00	1.00	1.00	1.00	1.00	1.00	1.00	1.00	1.00	1.00
PHF Adj:	1.00	1.00	1.00	1.00	1.00	1.00	1.00	1.00	1.00	1.00	1.00	1.00
PHF Volume:	41	819	636	143	1315	229	22	335	154	223	775	779
Reduct Vol:	0	0	0	0	0	0	0	0	0	0	0	0
Reduced Vol:	41	819	636	143	1315	229	22	335	154	223	775	779
PCE Adj:	1.00	1.00	1.00	1.00	1.00	1.00	1.00	1.00	1.00	1.00	1.00	1.00
MLF Adj:	1.00	1.00	1.00	1.00	1.00	1.00	1.00	1.00	1.00	1.00	1.00	1.00
FinalVolume:	41	819	636	143	1315	229	22	335	154	223	775	779
Saturation Flow Module:												
Sat/Lane:	1900	1900	1900	1900	1900	1900	1900	1900	1900	1900	1900	1900
Adjustment:	0.95	0.95	0.85	0.95	0.93	0.93	0.95	0.91	0.91	0.95	0.95	0.85
Lanes:	1.00	2.00	1.00	1.00	1.70	0.30	1.00	1.37	0.63	1.00	2.00	1.00
Final Sat.:	1805	3610	1615	1805	3007	524	1805	2357	1083	1805	3610	1615
Capacity Analysis Module:												
Vol/Sat:	0.02	0.23	0.39	0.08	0.44	0.44	0.01	0.14	0.14	0.12	0.21	0.48
Crit Moves:			****	****			****					****
Green/Cycle:	0.02	0.41	0.41	0.08	0.46	0.46	0.01	0.27	0.27	0.24	0.50	0.50
Volume/Cap:	0.94	0.56	0.97	0.97	0.94	0.94	0.97	0.52	0.52	0.52	0.43	0.97
Delay/Veh:	162.0	23.2	56.1	109.8	36.6	36.6	223.0	31.3	31.3	34.3	16.2	48.2
User DelAdj:	1.00	1.00	1.00	1.00	1.00	1.00	1.00	1.00	1.00	1.00	1.00	1.00
AdjDel/Veh:	162.0	23.2	56.1	109.8	36.6	36.6	223.0	31.3	31.3	34.3	16.2	48.2
LOS by Move:	F	C	E	F	D	D	F	C	C	C	B	D
HCM2kAvgQ:	3	10	25	8	29	29	2	7	7	6	8	29

Note: Queue reported is the number of cars per lane.

City of Murrieta General Plan
Future Proposed General Plan
PM Peak Hour

Level Of Service Computation Report
2000 HCM Operations Method (Future Volume Alternative)

Intersection #28 Jefferson Avenue & Murrieta Hot Springs Road

Cycle (sec): 100 Critical Vol./Cap.(X): 1.250
Loss Time (sec): 0 (Y+R=4.0 sec) Average Delay (sec/veh): 115.8
Optimal Cycle: 180 Level Of Service: F

Street Name:	Jefferson Avenue						Murrieta Hot Springs Road					
Approach:	North Bound			South Bound			East Bound			West Bound		
Movement:	L -	T -	R	L -	T -	R	L -	T -	R	L -	T -	R
Control:	Protected			Protected			Protected			Protected		
Rights:	Include			Include			Include			Include		
Min. Green:	0	0	0	0	0	0	0	0	0	0	0	0
Lanes:	1 0	3 0	2	2 0	2 1	0	1 0	2 1	0	1 0	3 0	1
Volume Module:												
Base Vol:	6	2300	1226	814	1025	70	40	210	111	581	90	891
Growth Adj:	1.00	1.00	1.00	1.00	1.00	1.00	1.00	1.00	1.00	1.00	1.00	1.00
Initial Bse:	6	2300	1226	814	1025	70	40	210	111	581	90	891
Added Vol:	0	0	0	0	0	0	0	0	0	0	0	0
PasserByVol:	0	0	0	0	0	0	0	0	0	0	0	0
Initial Fut:	6	2300	1226	814	1025	70	40	210	111	581	90	891
User Adj:	1.00	1.00	1.00	1.00	1.00	1.00	1.00	1.00	1.00	1.00	1.00	1.00
PHF Adj:	1.00	1.00	1.00	1.00	1.00	1.00	1.00	1.00	1.00	1.00	1.00	1.00
PHF Volume:	6	2300	1226	814	1025	70	40	210	111	581	90	891
Reduct Vol:	0	0	0	0	0	0	0	0	0	0	0	0
Reduced Vol:	6	2300	1226	814	1025	70	40	210	111	581	90	891
PCE Adj:	1.00	1.00	1.00	1.00	1.00	1.00	1.00	1.00	1.00	1.00	1.00	1.00
MLF Adj:	1.00	1.00	1.00	1.00	1.00	1.00	1.00	1.00	1.00	1.00	1.00	1.00
FinalVolume:	6	2300	1226	814	1025	70	40	210	111	581	90	891
Saturation Flow Module:												
Sat/Lane:	1900	1900	1900	1900	1900	1900	1900	1900	1900	1900	1900	1900
Adjustment:	0.95	0.91	0.75	0.92	0.90	0.90	0.95	0.86	0.86	0.95	0.91	0.85
Lanes:	1.00	3.00	2.00	2.00	2.81	0.19	1.00	2.00	1.00	1.00	3.00	1.00
Final Sat.:	1805	5187	2842	3502	4807	328	1805	3278	1639	1805	5187	1615
Capacity Analysis Module:												
Vol/Sat:	0.00	0.44	0.43	0.23	0.21	0.21	0.02	0.06	0.07	0.32	0.02	0.55
Crit Moves:		****		****			****					****
Green/Cycle:	0.01	0.35	0.35	0.19	0.53	0.53	0.02	0.08	0.08	0.38	0.44	0.44
Volume/Cap:	0.40	1.25	1.22	1.25	0.40	0.40	1.25	0.80	0.85	0.85	0.04	1.25
Delay/Veh:	66.0	149	138.5	165.5	14.0	14.0	291.8	56.4	61.7	38.2	15.9	151.8
User DelAdj:	1.00	1.00	1.00	1.00	1.00	1.00	1.00	1.00	1.00	1.00	1.00	1.00
AdjDel/Veh:	66.0	149	138.5	165.5	14.0	14.0	291.8	56.4	61.7	38.2	15.9	151.8
LOS by Move:	E	F	F	F	B	B	F	E	E	D	B	F
HCM2kAvgQ:	1	49	39	26	7	7	4	6	6	19	1	51

Note: Queue reported is the number of cars per lane.

City of Murrieta General Plan
Future Proposed General Plan
PM Peak Hour

Level Of Service Computation Report
2000 HCM Operations Method (Future Volume Alternative)

Intersection #29 Madison Avenue & Murrieta Hot Springs Road

Cycle (sec): 100 Critical Vol./Cap.(X): 1.016
Loss Time (sec): 0 (Y+R=4.0 sec) Average Delay (sec/veh): 51.1
Optimal Cycle: 180 Level Of Service: D

Street Name:	Madison Avenue						Murrieta Hot Springs Road					
Approach:	North Bound			South Bound			East Bound			West Bound		
Movement:	L -	T -	R	L -	T -	R	L -	T -	R	L -	T -	R
Control:	Protected			Protected			Protected			Protected		
Rights:	Include			Include			Include			Include		
Min. Green:	0	0	0	0	0	0	0	0	0	0	0	0
Lanes:	2 0	2 0	2	2 0	1 1	0	2 0	3 1	0	2 0	3 0	1
Volume Module:												
Base Vol:	316	600	1218	342	247	116	346	1505	279	791	1185	189
Growth Adj:	1.00	1.00	1.00	1.00	1.00	1.00	1.00	1.00	1.00	1.00	1.00	1.00
Initial Bse:	316	600	1218	342	247	116	346	1505	279	791	1185	189
Added Vol:	0	0	0	0	0	0	0	0	0	0	0	0
PasserByVol:	0	0	0	0	0	0	0	0	0	0	0	0
Initial Fut:	316	600	1218	342	247	116	346	1505	279	791	1185	189
User Adj:	1.00	1.00	1.00	1.00	1.00	1.00	1.00	1.00	1.00	1.00	1.00	1.00
PHF Adj:	1.00	1.00	1.00	1.00	1.00	1.00	1.00	1.00	1.00	1.00	1.00	1.00
PHF Volume:	316	600	1218	342	247	116	346	1505	279	791	1185	189
Reduct Vol:	0	0	0	0	0	0	0	0	0	0	0	0
Reduced Vol:	316	600	1218	342	247	116	346	1505	279	791	1185	189
PCE Adj:	1.00	1.00	1.00	1.00	1.00	1.00	1.00	1.00	1.00	1.00	1.00	1.00
MLF Adj:	1.00	1.00	1.00	1.00	1.00	1.00	1.00	1.00	1.00	1.00	1.00	1.00
FinalVolume:	316	600	1218	342	247	116	346	1505	279	791	1185	189
Saturation Flow Module:												
Sat/Lane:	1900	1900	1900	1900	1900	1900	1900	1900	1900	1900	1900	1900
Adjustment:	0.92	0.95	0.75	0.92	0.90	0.90	0.92	0.89	0.89	0.92	0.91	0.85
Lanes:	2.00	2.00	2.00	2.00	1.36	0.64	2.00	3.37	0.63	2.00	3.00	1.00
Final Sat.:	3502	3610	2842	3502	2338	1098	3502	5700	1057	3502	5187	1615
Capacity Analysis Module:												
Vol/Sat:	0.09	0.17	0.43	0.10	0.11	0.11	0.10	0.26	0.26	0.23	0.23	0.12
Crit Moves:			****	****				****		****		
Green/Cycle:	0.24	0.42	0.42	0.10	0.28	0.28	0.15	0.26	0.26	0.22	0.34	0.34
Volume/Cap:	0.38	0.39	1.02	1.02	0.38	0.38	0.68	1.02	1.02	1.02	0.68	0.35
Delay/Veh:	32.2	20.2	59.0	98.4	29.3	29.3	44.2	62.6	62.6	75.2	29.6	25.3
User DelAdj:	1.00	1.00	1.00	1.00	1.00	1.00	1.00	1.00	1.00	1.00	1.00	1.00
AdjDel/Veh:	32.2	20.2	59.0	98.4	29.3	29.3	44.2	62.6	62.6	75.2	29.6	25.3
LOS by Move:	C	C	E	F	C	C	D	E	E	E	C	C
HCM2kAvgQ:	4	7	29	10	5	5	7	22	22	19	12	4

Note: Queue reported is the number of cars per lane.

City of Murrieta General Plan
Future Proposed General Plan
PM Peak Hour

Level Of Service Computation Report
2000 HCM Operations Method (Future Volume Alternative)

Intersection #44 Jefferson Ave & Kalmia St

Cycle (sec): 100 | Critical Vol./Cap.(X): 1.688
Loss Time (sec): 0 (Y+R=4.0 sec) | Average Delay (sec/veh): 158.5
Optimal Cycle: 180 | Level Of Service: F

Street Name:	Jefferson Ave						Kalmia St					
Approach:	North Bound			South Bound			East Bound			West Bound		
Movement:	L	T	R	L	T	R	L	T	R	L	T	R
Control:	Protected			Protected			Protected			Protected		
Rights:	Include			Include			Include			Include		
Min. Green:	0	0	0	0	0	0	0	0	0	0	0	0
Lanes:	2 0	3 0	1	1 0	2 1	0	1 0	2 1	0	1 0	2 0	1
Volume Module:												
Base Vol:	412	1763	951	978	1203	34	34	658	281	313	533	869
Growth Adj:	1.00	1.00	1.00	1.00	1.00	1.00	1.00	1.00	1.00	1.00	1.00	1.00
Initial Bse:	412	1763	951	978	1203	34	34	658	281	313	533	869
Added Vol:	0	0	0	0	0	0	0	0	0	0	0	0
PasserByVol:	0	0	0	0	0	0	0	0	0	0	0	0
Initial Fut:	412	1763	951	978	1203	34	34	658	281	313	533	869
User Adj:	1.00	1.00	1.00	1.00	1.00	1.00	1.00	1.00	1.00	1.00	1.00	1.00
PHF Adj:	1.00	1.00	1.00	1.00	1.00	1.00	1.00	1.00	1.00	1.00	1.00	1.00
PHF Volume:	412	1763	951	978	1203	34	34	658	281	313	533	869
Reduct Vol:	0	0	0	0	0	0	0	0	0	0	0	0
Reduced Vol:	412	1763	951	978	1203	34	34	658	281	313	533	869
PCE Adj:	1.00	1.00	1.00	1.00	1.00	1.00	1.00	1.00	1.00	1.00	1.00	1.00
MLF Adj:	1.00	1.00	1.00	1.00	1.00	1.00	1.00	1.00	1.00	1.00	1.00	1.00
FinalVolume:	412	1763	951	978	1203	34	34	658	281	313	533	869
Saturation Flow Module:												
Sat/Lane:	1900	1900	1900	1900	1900	1900	1900	1900	1900	1900	1900	1900
Adjustment:	0.92	0.91	0.85	0.95	0.91	0.91	0.95	0.87	0.87	0.95	0.95	0.85
Lanes:	2.00	3.00	1.00	1.00	2.92	0.08	1.00	2.10	0.90	1.00	2.00	1.00
Final Sat.:	3502	5187	1615	1805	5024	142	1805	3471	1482	1805	3610	1615
Capacity Analysis Module:												
Vol/Sat:	0.12	0.34	0.59	0.54	0.24	0.24	0.02	0.19	0.19	0.17	0.15	0.54
Crit Moves:			****	****			****					****
Green/Cycle:	0.22	0.35	0.35	0.32	0.45	0.45	0.01	0.17	0.17	0.16	0.32	0.32
Volume/Cap:	0.53	0.97	1.69	1.69	0.53	0.53	1.69	1.10	1.10	1.10	0.46	1.69
Delay/Veh:	35.1	47.5	349.6	350.8	20.2	20.2	507.1	103	103.2	124.9	27.5	351.8
User DelAdj:	1.00	1.00	1.00	1.00	1.00	1.00	1.00	1.00	1.00	1.00	1.00	1.00
AdjDel/Veh:	35.1	47.5	349.6	350.8	20.2	20.2	507.1	103	103.2	124.9	27.5	351.8
LOS by Move:	D	D	F	F	C	C	F	F	F	F	C	F
HCM2kAvgQ:	6	26	77	79	10	10	4	18	18	17	7	71

Note: Queue reported is the number of cars per lane.

City of Murrieta General Plan
Future Proposed General Plan
PM Peak Hour

Level Of Service Computation Report
2000 HCM Operations Method (Future Volume Alternative)

Intersection #46 Jefferson Ave & Ivy St/Los Alamos Rd

Cycle (sec): 100 | Critical Vol./Cap.(X): 0.947
Loss Time (sec): 0 (Y+R=4.0 sec) | Average Delay (sec/veh): 36.5
Optimal Cycle: 180 | Level Of Service: D

Street Name:	Jefferson Ave						Ivy St/Los Alamos Rd					
Approach:	North Bound			South Bound			East Bound			West Bound		
Movement:	L	T	R	L	T	R	L	T	R	L	T	R
Control:	Protected			Protected			Protected			Protected		
Rights:	Include			Include			Include			Include		
Min. Green:	0	0	0	0	0	0	0	0	0	0	0	0
Lanes:	2 0	3 0	1	2 0	3 0	1	1 0	1 1	0	1 0	2 0	1
Volume Module:												
Base Vol:	312	2389	685	457	1448	113	90	224	187	259	274	494
Growth Adj:	1.00	1.00	1.00	1.00	1.00	1.00	1.00	1.00	1.00	1.00	1.00	1.00
Initial Bse:	312	2389	685	457	1448	113	90	224	187	259	274	494
Added Vol:	0	0	0	0	0	0	0	0	0	0	0	0
PasserByVol:	0	0	0	0	0	0	0	0	0	0	0	0
Initial Fut:	312	2389	685	457	1448	113	90	224	187	259	274	494
User Adj:	1.00	1.00	1.00	1.00	1.00	1.00	1.00	1.00	1.00	1.00	1.00	1.00
PHF Adj:	1.00	1.00	1.00	1.00	1.00	1.00	1.00	1.00	1.00	1.00	1.00	1.00
PHF Volume:	312	2389	685	457	1448	113	90	224	187	259	274	494
Reduct Vol:	0	0	0	0	0	0	0	0	0	0	0	0
Reduced Vol:	312	2389	685	457	1448	113	90	224	187	259	274	494
PCE Adj:	1.00	1.00	1.00	1.00	1.00	1.00	1.00	1.00	1.00	1.00	1.00	1.00
MLF Adj:	1.00	1.00	1.00	1.00	1.00	1.00	1.00	1.00	1.00	1.00	1.00	1.00
FinalVolume:	312	2389	685	457	1448	113	90	224	187	259	274	494
Saturation Flow Module:												
Sat/Lane:	1900	1900	1900	1900	1900	1900	1900	1900	1900	1900	1900	1900
Adjustment:	0.92	0.91	0.85	0.92	0.91	0.85	0.95	0.89	0.89	0.95	0.95	0.85
Lanes:	2.00	3.00	1.00	2.00	3.00	1.00	1.00	1.09	0.91	1.00	2.00	1.00
Final Sat.:	3502	5187	1615	3502	5187	1615	1805	1834	1531	1805	3610	1615
Capacity Analysis Module:												
Vol/Sat:	0.09	0.46	0.42	0.13	0.28	0.07	0.05	0.12	0.12	0.14	0.08	0.31
Crit Moves:		****		****			****					****
Green/Cycle:	0.15	0.49	0.49	0.14	0.47	0.47	0.05	0.17	0.17	0.20	0.32	0.32
Volume/Cap:	0.59	0.95	0.87	0.95	0.59	0.15	0.95	0.71	0.71	0.71	0.23	0.95
Delay/Veh:	41.3	33.0	33.4	70.7	19.6	15.0	122.0	43.0	43.0	43.3	24.9	59.6
User DelAdj:	1.00	1.00	1.00	1.00	1.00	1.00	1.00	1.00	1.00	1.00	1.00	1.00
AdjDel/Veh:	41.3	33.0	33.4	70.7	19.6	15.0	122.0	43.0	43.0	43.3	24.9	59.6
LOS by Move:	D	C	C	E	B	B	F	D	D	D	C	E
HCM2kAvgQ:	5	31	22	11	12	2	6	8	8	9	3	20

Note: Queue reported is the number of cars per lane.

City of Murrieta General Plan
Future Proposed General Plan
PM Peak Hour

Level Of Service Computation Report
2000 HCM Operations Method (Future Volume Alternative)

Intersection #57 Whitewood Rd & Murrieta Hot Springs Rd

Cycle (sec): 100 Critical Vol./Cap.(X): 1.014
Loss Time (sec): 0 (Y+R=4.0 sec) Average Delay (sec/veh): 51.6
Optimal Cycle: 180 Level Of Service: D

Street Name:	Whitewood Rd						Murrieta Hot Springs Rd					
Approach:	North Bound			South Bound			East Bound			West Bound		
Movement:	L -	T -	R	L -	T -	R	L -	T -	R	L -	T -	R
Control:	Protected			Protected			Protected			Protected		
Rights:	Ovl			Include			Include			Include		
Min. Green:	0	0	0	0	0	0	0	0	0	0	0	0
Lanes:	1 0	2 0	1	1 0	1 1	0	1 0	2 1	0	1 0	2 1	0
Volume Module:												
Base Vol:	434	314	529	362	266	233	166	1645	172	401	2240	457
Growth Adj:	1.00	1.00	1.00	1.00	1.00	1.00	1.00	1.00	1.00	1.00	1.00	1.00
Initial Bse:	434	314	529	362	266	233	166	1645	172	401	2240	457
Added Vol:	0	0	0	0	0	0	0	0	0	0	0	0
PasserByVol:	0	0	0	0	0	0	0	0	0	0	0	0
Initial Fut:	434	314	529	362	266	233	166	1645	172	401	2240	457
User Adj:	1.00	1.00	1.00	1.00	1.00	1.00	1.00	1.00	1.00	1.00	1.00	1.00
PHF Adj:	1.00	1.00	1.00	1.00	1.00	1.00	1.00	1.00	1.00	1.00	1.00	1.00
PHF Volume:	434	314	529	362	266	233	166	1645	172	401	2240	457
Reduct Vol:	0	0	0	0	0	0	0	0	0	0	0	0
Reduced Vol:	434	314	529	362	266	233	166	1645	172	401	2240	457
PCE Adj:	1.00	1.00	1.00	1.00	1.00	1.00	1.00	1.00	1.00	1.00	1.00	1.00
MLF Adj:	1.00	1.00	1.00	1.00	1.00	1.00	1.00	1.00	1.00	1.00	1.00	1.00
FinalVolume:	434	314	529	362	266	233	166	1645	172	401	2240	457
Saturation Flow Module:												
Sat/Lane:	1900	1900	1900	1900	1900	1900	1900	1900	1900	1900	1900	1900
Adjustment:	0.95	0.95	0.85	0.95	0.88	0.88	0.95	0.90	0.90	0.95	0.89	0.89
Lanes:	1.00	2.00	1.00	1.00	1.07	0.93	1.00	2.72	0.28	1.00	2.49	0.51
Final Sat.:	1805	3610	1615	1805	1790	1568	1805	4630	484	1805	4200	857
Capacity Analysis Module:												
Vol/Sat:	0.24	0.09	0.33	0.20	0.15	0.15	0.09	0.36	0.36	0.22	0.53	0.53
Crit Moves:	****				****		****				****	
Green/Cycle:	0.24	0.13	0.37	0.25	0.15	0.15	0.09	0.38	0.38	0.24	0.53	0.53
Volume/Cap:	1.01	0.66	0.89	0.80	1.01	1.01	1.01	0.94	0.94	0.94	1.01	1.01
Delay/Veh:	85.3	44.6	44.6	44.6	86.9	86.9	119.6	39.2	39.2	65.6	44.8	44.8
User DelAdj:	1.00	1.00	1.00	1.00	1.00	1.00	1.00	1.00	1.00	1.00	1.00	1.00
AdjDel/Veh:	85.3	44.6	44.6	44.6	86.9	86.9	119.6	39.2	39.2	65.6	44.8	44.8
LOS by Move:	F	D	D	D	F	F	F	D	D	E	D	D
HCM2kAvgQ:	20	6	19	13	13	13	9	25	25	17	39	39

Note: Queue reported is the number of cars per lane.

City of Murrieta General Plan
Future Proposed General Plan
PM Peak Hour

Level Of Service Computation Report
2000 HCM Operations Method (Future Volume Alternative)

Intersection #102 Leon Road & Scott Road

Cycle (sec): 100 Critical Vol./Cap.(X): 0.817
Loss Time (sec): 0 (Y+R=4.0 sec) Average Delay (sec/veh): 32.5
Optimal Cycle: 125 Level Of Service: C

Street Name:	Leon Road						Scott Road					
Approach:	North Bound			South Bound			East Bound			West Bound		
Movement:	L -	T -	R	L -	T -	R	L -	T -	R	L -	T -	R
Control:	Protected			Protected			Protected			Protected		
Rights:	Include			Include			Include			Include		
Min. Green:	0	0	0	0	0	0	0	0	0	0	0	0
Lanes:	2 0	1 1	0	1 0	1 1	0	1 0	3 0	1	1 0	2 1	0
Volume Module:												
Base Vol:	563	411	18	63	209	373	580	525	505	4	374	155
Growth Adj:	1.00	1.00	1.00	1.00	1.00	1.00	1.00	1.00	1.00	1.00	1.00	1.00
Initial Bse:	563	411	18	63	209	373	580	525	505	4	374	155
Added Vol:	0	0	0	0	0	0	0	0	0	0	0	0
PasserByVol:	0	0	0	0	0	0	0	0	0	0	0	0
Initial Fut:	563	411	18	63	209	373	580	525	505	4	374	155
User Adj:	1.00	1.00	1.00	1.00	1.00	1.00	1.00	1.00	1.00	1.00	1.00	1.00
PHF Adj:	1.00	1.00	1.00	1.00	1.00	1.00	1.00	1.00	1.00	1.00	1.00	1.00
PHF Volume:	563	411	18	63	209	373	580	525	505	4	374	155
Reduct Vol:	0	0	0	0	0	0	0	0	0	0	0	0
Reduced Vol:	563	411	18	63	209	373	580	525	505	4	374	155
PCE Adj:	1.00	1.00	1.00	1.00	1.00	1.00	1.00	1.00	1.00	1.00	1.00	1.00
MLF Adj:	1.00	1.00	1.00	1.00	1.00	1.00	1.00	1.00	1.00	1.00	1.00	1.00
FinalVolume:	563	411	18	63	209	373	580	525	505	4	374	155
Saturation Flow Module:												
Sat/Lane:	1900	1900	1900	1900	1900	1900	1900	1900	1900	1900	1900	1900
Adjustment:	0.92	0.94	0.94	0.95	0.86	0.86	0.95	0.91	0.85	0.95	0.87	0.87
Lanes:	2.00	1.92	0.08	1.00	1.00	1.00	1.00	3.00	1.00	1.00	2.12	0.88
Final Sat.:	3502	3438	151	1805	1632	1632	1805	5187	1615	1805	3506	1453
Capacity Analysis Module:												
Vol/Sat:	0.16	0.12	0.12	0.03	0.13	0.23	0.32	0.10	0.31	0.00	0.11	0.11
Crit Moves:	****					****	****				****	
Green/Cycle:	0.20	0.37	0.37	0.11	0.28	0.28	0.39	0.52	0.52	0.00	0.13	0.13
Volume/Cap:	0.82	0.32	0.32	0.32	0.46	0.82	0.82	0.19	0.60	0.60	0.82	0.82
Delay/Veh:	46.0	22.8	22.8	42.2	30.0	41.0	34.5	12.9	18.0	149.9	50.3	50.3
User DelAdj:	1.00	1.00	1.00	1.00	1.00	1.00	1.00	1.00	1.00	1.00	1.00	1.00
AdjDel/Veh:	46.0	22.8	22.8	42.2	30.0	41.0	34.5	12.9	18.0	149.9	50.3	50.3
LOS by Move:	D	C	C	D	C	D	C	B	B	F	D	D
HCM2kAvgQ:	11	5	5	2	6	14	18	3	11	1	8	8

Note: Queue reported is the number of cars per lane.

APPENDIX C:
SED DATA

TAZ_ID	Existing General Plan	Preferred LU for GPU 2035	Existing on the Ground Sq Ft (PTAX)	Existing on the Ground DU (PTAX)	GPU 2035 Growth	Acres	Focus Area	Existing Zoning	Modeled 2009 Sq Ft	Modeled 2009 DU	Existing GP Modeled 2035 Sq Ft	Existing GP Modeled 2035 DU	GPU 2035 Growth Sq FT	GPU 2035 Growth DU	GPU 2035 Sq Ft to be Modeled	GPU 2035 DU to be Modeled For EIR	**GPU 2035 DU to be Modeled For Traffic & Fiscal**	2009 Students	Existing GP 2035 Modeled Students	GPU 2035 Students	**2009 Total Jobs**	2009 Retail Jobs	2009 Non-Retail Jobs	**Existing GP Modeled 2035 Total Jobs**	Existing GP Modeled 2035 Retail Jobs	Existing GP Modeled 2035 Non-Retail Jobs	**GPU 2035 Total Jobs**	GPU 2035 Retail Jobs	GPU 2035 Non-Retail Jobs	2009 Population	Existing GP Modeled 2035 Population	GPU 2035 Population	Notes
401	Open Space	Parks and Open Space				181.07		OS																									
401	Private Recreation	Parks and Open Space		3		188.74		PR																									
401	Single-Family 1, Residential	Single Family Residential		317		194.69		SF-1		320		368				388	368													960	1,104	1,104	
401	Single-Family 2, Residential	Single Family Residential		320		56.31		SF-2		271		279				320	320													813	837	960	
402	Civic/Institutional	Civic and Institutional				9.93		SP-C/I													5	0	5	5	0	5	5	0	5				
402	Open Space	Parks and Open Space				6.20		OS																									
402	Single-Family 1, Residential	Single Family Residential		99		21.41		SF-1		100		100				100	100													300	300	300	
402	Specific Plan	Parks and Open Space	15,404			218.93									15,404																		
402	Specific Plan	Single Family Residential		465		128.96		SF1*		379		394				465	465													1,137	1,182	1,395	
402								SF2*		83		298				298	298													249	894	894	
403	Open Space	Parks and Open Space		1		26.80		OS																									
403	Parks & Recreation	Parks and Open Space				29.22		P&R																									
403	Single-Family 1, Residential	Single Family Residential		569		110.70		SF-1		559		559				559	559													1,677	1,677	1,677	
403	Specific Plan	Civic/Institutional				10.47		SP-C/I		1143 students								1,143	1,143	1,143													Elementary School (10.4 acres)
403	Specific Plan	Parks and Open Space				12.53																											
403	Specific Plan	Single Family Residential		151		31.36		SF1*		152		152				152	152													456	456	456	
404	Single-Family 1, Residential	Single Family Residential		40		9.43		SF-1		40		40				40	40													120	120	120	
404	Specific Plan	Parks and Open Space				2.20																											
404	Specific Plan	Single Family Residential		368		60.53		SF1*		368		368				368	368													1,104	1,104	1,104	
405	Specific Plan	Parks and Open Space				64.32																											
405	Specific Plan	Single Family Residential				77.26		SF1*		0		270				270	270													0	810	810	
406	Specific Plan	Parks and Open Space				55.32																											
406	Specific Plan	Single Family Residential				0.33		SP-C/I		0		0				0	0				5	0	5	5	0	5	5	0	5	0	0	0	Rancho Water & Sewer (jobs)
407	Open Space	Parks and Open Space				40.72																											
407	Single-Family 1, Residential	Single Family Residential		260		52.88		SF-1		260		260				260	260													780	780	780	
408	Specific Plan	Single Family Residential				89.74		SF1*		0		322				322	322													0	966	966	
409	Specific Plan	Parks and Open Space				36.53																											
409	Specific Plan	Single Family Residential				107.64		SF1*		0		378				378	378													0	1,134	1,134	
410	Specific Plan	Civic/Institutional				9.36		SP-S		1000 students								1,000	1,000	1,000													
410	Specific Plan	Commercial				3.53		SP-C	0		36,500				36,500						0	0	0	73	73	0	73	73	0				
410	Specific Plan	Parks and Open Space				8.64																											
410	Specific Plan	Single Family Residential				16.33		SF1*		0		59				59	59													0	177	177	
411	Community Commercial	Commercial	121,725			12.05		CC	121,725		147,500				147,500						219	219	0	266	266	0	295	295	0				
411	Estate Residential 3	Single Family Residential		161		62.45		ER-3		162		162				162	162													486	486	486	
411	Open Space	Parks and Open Space				75.58																											
411	Single-Family 1, Residential	Single Family Residential		182		39.53		SF-1		182		182				182	182													546	546	546	
412	Estate Residential 3	Single Family Residential		44		12.25		ER-3		44		44				44	44													132	132	132	
412	Multi-Family 1, Residential	Multiple Family Residential				14.27		MF-1		0		178				178	178													0	534	534	
412	Open Space	Parks and Open Space				0.96																											
412	Single-Family 1, Residential	Single Family Residential		212		43.80		SF-1		214		214				214	214													642	642	642	
413	Civic/Institutional	Civic and Institutional				2.51		CI																									
413	Specific Plan	Parks and Open Space				33.46																											
413	Specific Plan	Single Family Residential		108		21.26		SF1*		114		114				114	114													342	342	342	
414	Estate Residential 3	Single Family Residential		7		41.68		ER-3		9		13				13	13													27	39	39	
414	Open Space	Parks and Open Space				8.81		OS																									
414	Parks & Recreation	Parks and Open Space				0.45		P&R																									
414	Single-Family 1, Residential	Single Family Residential		85		21.88		SF-1		84		84				85	85													252	252	255	
415	Estate Residential 3	Single Family Residential		84		62.56		ER-3		85		97				97	97													255	291	291	
415	Open Space	Parks and Open Space				0.22		OS																									
416	Civic/Institutional	Civic and Institutional	827,572			76.34		C/I		5336 students								5,336	5,336	5,336													Middle & High Schools (76.3 acres)
416	Estate Residential 2	Single Family Residential		43		72.41		ER-2		42		72				72	72													126	216	216	
417	Estate Residential 3	Single Family Residential		1		19.69		ER-3		1		12				12	12													3	36	36	
417	Open Space	Parks and Open Space		1		17.67		OS																									
417	Parks & Recreation	Parks and Open Space				2.27		P&R																									
417	Single-Family 1, Residential	Single Family Residential		117		23.07		SF-1		108		108				117	117													324	324	351	
418	Rural Residential	Rural Residential		29		285.60		RR		31		61				61	61													93	183	183	
419	Open Space	Parks and Open Space		1		14.13		OS																									
419	Parks & Recreation	Parks and Open Space				2.66		P&R																									
419	Single-Family 1, Residential	Single Family Residential		221		48.01		SF-1		222		222				222	222													666	666	666	
420	Estate Residential 3	Single Family Residential		132		66.44		ER-3		132		132				132	132													396	396	396	
420	Open Space	Parks and Open Space				4.54		OS																									
421	Estate Residential 2	Single Family Residential		21		22.00		ER-2		20		20				21	21													60	60	63	
421	Multiple Use, Area 3	Commercial		6	Yes	10.63	E	MU-3	0		0		140,623		140,623	-6	0				0	0	0	0	0	0	281	281	0	0	0	0	
421	Multiple Use, Area 3	Multiple Family Residential		67	Yes	23.23	E	MU-3		75		75		697		764	764													225	225	2,291	
421	Neighborhood Commercial	Commercial				2.21		NC	0		19,100				19,100						0	0	0	35	35	0	35	35	0				
421	Single-Family 1, Residential	Single Family Residential		13		11.78		SF-1		13		42				42	42													39	126	126	
422	Open Space	Parks and Open Space				3.03		OS																									
422	Single-Family 2, Residential	Single Family Residential		490		74.14		SF-2		490		490				490	490													1,470	1,470	1,470	
423	Civic/Institutional	Civic and Institutional				3.88		CI																									
423	Open Space	Parks and Open Space				9.36		OS																									
423	Single-Family 1, Residential	Single Family Residential		523		123.76		SF-1		468		573				573	573													1,404	1,719	1,719	
424	Open Space	Parks and Open Space				1.64																											
424	Single-Family 1, Residential	Single Family Residential		254		51.57		SF-1		254		254				254	254													762	762	762	
424								ER-2		1		6				6	6													3	18	18	
425	Civic/Institutional	Civic and Institutional	107,346	1		15.53		C/I	0		158,500				158,500						10	0	10	10	0	10	10	0	10				Church
425	Estate Residential 2	Single Family Residential		1		3.64		ER-2								1	1																
425	Parks & Recreation	Parks and Open Space		1		0.76		P&R																									
425	Single-Family 1, Residential	Single Family Residential		216		42.72		SF-1		208		687				687	687													624	2,061	2,061	
426	Open Space	Parks and Open Space				7.59		OS																									
426	Rural Residential	Rural Residential		82		223.43		RR		80		106				106	106													240	318	318	
427	Community Commercial	Commercial		1		22.14		CC		0		0			0						0	0	0	0	0	0	0	0	0				
428	Open Space	Parks and Open Space				19.49		OS																									
428	Parks & Recreation	Parks and Open Space				9.65		P&R																									
428	Single-Family 2, Residential	Single Family Residential		365		57.81		SF-2		365		365				365	365													1,095	1,095	1,095	
429	Civic/Institutional	Civic and Institutional				3.04		C/I	0		0				0																		
429	Community Commercial	Commercial	1,087	1		14.54		CC	0		176,800				176,800						0	0	0	329	329	0	329	329	0				
429	Estate Residential 2	Single Family Residential		24		40.25		ER-2		24		32				32	32													72	96	96	
429	Multiple Use, Area 3	Commercial	30,651		Yes	2.31	E	MU-3	0		182,900		30,603		61,254						0	0	0	318	318	0	123	123	0				
429	Multiple Use, Area 3	Multiple Family Residential			Yes	4.50	E	MU-3		6		6		135		135	135													18	18	405	
429	Multiple Use, Area 3	Professional and Office		4	Yes	8.23	E	MU-3					95,871		95,871	-4	0				0	0	0	0	0	0	383	0	383	0	0	0	
430	Open Space	Parks and Open Space				48.11		OS																									
430	Parks & Recreation	Parks and Open Space				1.12		P&R																									
430	Single-Family 1, Residential	Single Family Residential		361		75.33		SF-1		361		362				362	362													1,083	1,086	1,086	
431	Specific Plan	Mixed Use	52,134	17		7.50		SP-VMU	0		63,500				63,500						0	0	0	115	0	115	115	0	115				
431	Specific Plan	Rural Residential	10,855	14		19.75		VRR*		15		17				17	17													45	51	51	
431	Specific Plan	Single Family Residential	128,021	217		99.69		VSF1*		117		253				253	253													351	759	759	
								VSF2*		112		123				123	123													336	369	369	
432	Specific Plan	Commercial		1		8.64		SP-PA4	0		63,500				63,500						0	0	0	115	115	0	115	115	0				
432	Specific Plan	Multiple Family Residential		2		6.05																											
432	Specific Plan	Parks and Open Space		1		3.53																											
432	Specific Plan	Single Family Residential		4		33.57				0		0				4	4													0	0	12	
433	Open Space	Parks and Open Space				0.78		OS																									
433	Parks & Recreation	Parks and Open Space				18.92		P&R																									
433	Single-Family 2, Residential	Single Family Residential		114		20.72		SF-2		114		114				114	114													342	342	342	

TAZ_ID	Existing General Plan	Preferred LU for GPU 2035	Existing on the Ground Sq Ft (PTAX)	Existing on the Ground DU (PTAX)	GPU 2035 Growth	Acres	Focus Area	Existing Zoning	Modeled 2009 Sq Ft	Modeled 2009 DU	Existing GP Modeled 2035 Sq Ft	Existing GP Modeled 2035 DU	GPU 2035 Growth Sq FT	GPU 2035 Growth DU	GPU 2035 Sq Ft to be Modeled	GPU 2035 DU to be Modeled For EIR	**GPU 2035 DU to be Modeled For Traffic & Fiscal**	2009 Students	Existing GP 2035 Modeled Students	GPU 2035 Students	**2009 Total Jobs**	2009 Retail Jobs	2009 Non-Retail Jobs	**Existing GP Modeled 2035 Total Jobs**	Existing GP Modeled 2035 Retail Jobs	Existing GP Modeled 2035 Non-Retail Jobs	**GPU 2035 Total Jobs**	GPU 2035 Retail Jobs	GPU 2035 Non-Retail Jobs	2009 Population	Existing GP Modeled 2035 Population	GPU 2035 Population	Notes
434	Civic/Institutional	Civic and Institutional				6.58		C/I	0		0				0																		
434	Civic/Institutional	Civic and Institutional			Yes	0.21	E	C/I	0		0		2,028		2,028						0	0	0	0	0	0	4	0	4				
434	Community Commercial	Commercial	12,510	28		26.89		CC	0		319,500				319,500						0	0	0	575	575	0	575	575	0				
434	Estate Residential 2	Single Family Residential		13		21.75		ER-2		11		23				23	23													33	69	69	
434	Multiple Use, Area 3	Commercial	32,968	1	Yes	4.82	E	MU-3	0		150,000		63,733		96,701	-1	0				0	0	0	270	270	0	193	193	0	0	0	0	
434	Multiple Use, Area 3	Professional and Office		4	Yes	11.07	E	MU-3		6		6	128,932		128,932	-4	0				0	0	0	0	0	0	516	516	0	18	18	0	
435	Civic/Institutional	Civic and Institutional				15.05		C/I		651	students							651	651	651													Elementary School
435	Open Space	Parks and Open Space		1		2.45		OS																									
435	Single-Family 1, Residential	Single Family Residential		383		65.59		SF-1		384		384				384	384													1,152	1,152	1,152	
436	Open Space	Parks and Open Space				29.33		OS																									
436	Single-Family 1, Residential	Single Family Residential		293		54.80		SF-1		284		284				284	284													852	852	852	
437	Specific Plan	Civic/Institutional	60,106	1		20.59		SP-VP/C/I		956	students							956	956	956													Elementary School
437	Specific Plan	Commercial	18,979	10	Yes	7.91	HDTSP	SP-VNC	0		59,200		135,156		194,356						0	0	0	106	106	0	389	389	0	0	0	0	
437	Specific Plan	Mixed Use	151,452	29	Yes	21.91	HDTSP	SP-VMU	0		173,300		251,101	256	424,401	256	256				0	0	0	312	0	312	849	849	0	0	0	768	
437	Specific Plan	Single Family Residential	13,653	56		17.67	HDTSP	VSF1*		31		31				31	31													93	93	93	
437	Specific Plan	Professional and Office					HDTSP	VRO*	0	20	85,300	20			85,300	20	20				0	0	0	153	0	153	341	0	341	60	60	60	
437	Specific Plan	Mixed Use						VMU*		9		9				9	9													27	27	27	
437	Specific Plan	Commercial						VNC*		4		0				4	4													12	0	12	
438	Rural Residential	Rural Residential		18		166.88		RR		22		31				31	31													66	93	93	
439	Civic/Institutional	Civic and Institutional				6.56		C/I	0		80,500				80,500						0	0	0	145	0	145	145	0	145				City Hall
439	Estate Residential 1	Rural Residential		49		114.05		ER-1		45		58				58	58													135	174	174	
439	Rural Residential	Rural Residential		1		30.07		RR		3		3				3	3													9	9	9	
440	Civic/Institutional	Civic and Institutional			No	1.07	E																										
440	Civic/Institutional	Commercial	1,648		No	0.42	E																										
440	Multiple Use, Area 3	Commercial	46,590	5	No	11.77	E									-5	0																
440	Specific Plan	Commercial	383,815	7	No	48.28	E		465,400		764,700				764,700	-7	0				837	837	0	1,376	1,376	0	1,376	1,376	0	0	0	0	
440	Specific Plan	Multiple Family Residential		390	No	16.37	E			472		472				472	472													1,416	1,416	1,416	
441	Multi-Family 2, Residential	Multiple Family Residential	61,528			15.98		MF-2	49,400	71	100,000	71			100,000	71	71				149	0	149	270	0	270	270	0	270	213	213	213	Nursing Home (212 existing bed, 400 beds in future)
441	Open Space	Parks and Open Space				36.73		OS																									
442	Civic/Institutional	Civic and Institutional	159,252			14.62		C/I													10	0	10	10	0	10	10	0	10				Church
442	Community Commercial	Commercial	161,790			15.29		CC	198,300		186,611				186,611						356	356	0	336	336	0	336	336	0				
442	Open Space	Parks and Open Space				4.39		OS																									
443	Single-Family 1, Residential	Single Family Residential		125		26.53		SF-1		116		116				125	125													348	348	375	
444	Specific Plan	Civic/Institutional	164,095			31.60	HDTSP	VP/C/I	0		271,800				271,800						0	0	0	489	0	489	489	0	489				City of Murrieta
444	Specific Plan	Commercial	21,822		Yes	6.93	HDTSP	SP-VNC	0		59,200		135,156		194,356						0	0	0	106	106	0	389	389	0				
444	Specific Plan	Mixed Use	55,712	2	Yes	13.29	HDTSP	SP-VMU	0		115,000		251,012	256	366,012	258	258				0	0	0	207	207	0	732	732	0	0	0	774	
444	Specific Plan	Multiple Family Residential		118		14.97	HDTSP	MF1*		111		111				111	111													333	333	333	
445	Multi-Family 2, Residential	Multiple Family Residential		271		20.72		MF-2		270		387				387	387													810	1,161	1,161	
446	Civic/Institutional	Civic and Institutional				1.67		CI																									
446	Open Space	Parks and Open Space				31.62		OS																									
446	Single-Family 2, Residential	Single Family Residential		156		22.06		SF-2		156		156				156	156													468	468	468	
447	Open Space	Parks and Open Space		4		70.21		OS																									
447	Private Recreation	Parks and Open Space		1		97.35		PR																									
447	Single-Family 2, Residential	Single Family Residential		1599		187.61		SF-2		1,594		1,594				1,599	1,599													4,782	4,782	4,797	
448	Estate Residential 1	Rural Residential		25		35.61		RR		25		25				25	25													75	75	75	
448	Multi-Family 1, Residential	Multiple Family Residential		1		7.92		MF-1		55		55				55	55													165	165	165	
448	Multiple Use, Area 3	Professional and Office	39,736	3	Yes	8.97	E	MU-3	0	1	108,500	1	104,476		104,476	-3	0				0	0	0	196	196	0	418	0	418	3	3	0	
448	Neighborhood Commercial	Commercial		1		1.10		NC	0		9,500				9,500						0	0	0	17	17	0	17	17	0				
448	Single-Family 2, Residential	Single Family Residential		1		19.14		SF-2		1		144				144	144													3	432	432	
449	Multi-Family 2, Residential	Multiple Family Residential		448		25.84		MF-2		448		448				448	448													1,344	1,344	1,344	
450	Multi-Family 2, Residential	Multiple Family Residential		142		15.22		MF-1		284		284				284	284													852	852	852	
450	Multiple Use, Area 3	Commercial	270,908	3	No	26.34	E	MU-3	328,900		658,600				270,908	-3	0				591	591	0	1,185	1,185	0	542	542	0	0	0	0	
450	Multiple Use, Area 3	Commercial	11,726		Yes	5.61	E	MU-3	0		0		74,284		86,009						0	0	0	0	0	0	172	172	0				
450	Multiple Use, Area 3	Multiple Family Residential	0	188	No	22.45	E	MU-3		315		315				315	315													945	945	945	
451	Rural Residential	Rural Residential		16		138.25		RR		19		23				23	23													57	69	69	
452	Estate Residential 1	Rural Residential		2		67.99		ER-1		2		43				43	43													6	129	129	
452	Rural Residential	Rural Residential		9		86.23		RR		8		12				12	12													24	36	36	
453	Civic/Institutional	Civic and Institutional				3.60		CI																									
453	Parks & Recreation	Parks and Open Space				6.82		P&R																									
453	Single-Family 1, Residential	Single Family Residential		111		61.33		SF-1		111		351				351	351													333	1,053	1,053	
454	Regional Commercial	Commercial	372,111			39.93		RC	372,111		695,200				695,200						670	670	0	1,251	1,251	0	1,253	1,251	0				
455	Community Commercial	Commercial	156,448			18.62		CC	91,535		226,800				226,800						165	165	0	408	408	0	408	408	0				
455	Recreational/Resort Commercial	Commercial	13,865			7.73		RRC	17,545		134,100				134,100						32	32	0	241	241	0	241	0	241				
456	Open Space	Parks and Open Space				24.85		OS																									
456	Parks & Recreation	Parks and Open Space				6.50		P&R																									
456	Single-Family 2, Residential	Single Family Residential		617		75.34		SF-2		616		616				617	617													1,848	1,848	1,851	
457	Community Commercial	Commercial	243,173			21.34		CC	303,311		261,000				261,000						545	545	0	470	470	0	470	470	0				
458	Multi-Family 1, Residential	Multiple Family Residential		149		9.18		MF-1		140		140				149	149													420	420	447	
458	Multiple Use, Area 3	Commercial	16,003		No	0.96	E	MU-3	0		0				16,033						0	0	0	0	0	0	32	32	0	0	0	0	
458	Multiple Use, Area 3	Commercial	73,201	7	Yes	27.69	E	MU-3	75,500		752,500		366,326		441,826	-7	0				136	136	0	1,355	1,355	0	884	884	0	0	0	0	
458	Multiple Use, Area 3	Multiple Family Residential		98	No	7.40	E	MU-3		139		139				139	139													417	417	417	
458	Multiple Use, Area 3	Multiple Family Residential		7	Yes	9.11	E	MU-3		0		0		273		273	273													0	0	820	
458	Multiple Use, Area 3	Professional and Office	80,474	37	Yes	18.20	E	MU-3	0		0	0	211,930		292,404	-37	0				0	0	0	0	0	0	1,170	0	1,170	0	0	0	
459	Open Space	Parks and Open Space				3.09		OS																									
459	Single-Family 1, Residential	Single Family Residential		60		17.19		SF-1		60		60				60	60													180	180	180	
460	Civic/Institutional	Civic and Institutional				15.48		C/I		778	students							778	778	778													Elementary School
460	Open Space	Parks and Open Space				18.36		OS																									
460	Parks & Recreation	Parks and Open Space				4.90		P&R																									
460	Single-Family 1, Residential	Single Family Residential		112		24.04		SF-1		112		112				112	112													336	336	336	
461	Civic/Institutional	Civic and Institutional				14.90		C/I		1628	students							1,628	1,628	1,628													Middle School
461	Community Commercial	Commercial	91,211	18		14.30		CC	90,700		174,400				174,400						163	163	0	313	313	0	313	313	0				
461	Multi-Family 2, Residential	Multiple Family Residential		186		7.56		MF-2		154		154				186	186													462	462	558	
461	Neighborhood Commercial	Commercial	6,622			0.70		NC	6,600		6,600				6,622						11	11	0	11	11	0	11	11	0				
461	Parks & Recreation	Parks and Open Space				18.70		P&R																									Sports Park
461	Single-Family 1, Residential	Single Family Residential		189		37.82		SF-2		189		189				189	189													567	567	567	
462	Business Park	Business Park		1	No	29.31	D	BP	0		408,400				408,400	-1	0				0	0	0	734	0	734	734	0	734	0	0	0	
462	Estate Residential 1	Rural Residential		5		11.48		ER-1		5		5				5	5													15	15	15	
462	Estate Residential 2	Single Family Residential		26		20.95		ER-2		25		25				25	25													75	75	75	
462	General Industrial-A	Industrial	1,488			9.26		GI-1	0		129,600				129,600	0	0				0	0	0	117	0	117	117	0	117				
462	Rural Residential	Rural Residential				0.38		RR		0		0				0	0																
463	Community Commercial	Commercial	59,327			8.00		CC	85,800		97,500				97,500						154	154	0	175	175	0	195	195	0				
463	Multi-Family 2, Residential	Multiple Family Residential				9.04		MF-2		0		148				148	148													0	444	444	
463	Multiple Use, Area 3	Commercial	293,802	3	No	26.36	E	MU-3	398,100		634,300				293,802	-3	0				716	716	0	1,141	1,141	0	588	588	0	0	0	0	
463	Multiple Use, Area 3	Commercial			Yes	26.83	E	MU-3	0		0		354,993		354,993						0	0	0	0	0	0	710	710	0				
464	Rural Residential	Rural Residential		33		143.43		RR		33		50				50	50													99	150	150	
465	Rural Residential	Rural Residential		46		147.91		RR		47		62				62	62													141	186	186	
466	Regional Commercial	Commercial		1		39.94		RC		1200-2400	students							0	2,400	2,400													New High School
466	Single-Family 1, Residential	Single Family Residential				22.37		SF-1								0	0													0	0	0	

TAZ_ID	Existing General Plan	Preferred LU for GPU 2035	Existing on the Ground Sq Ft (PTAX)	Existing on the Ground DU (PTAX)	GPU 2035 Growth	Acres	Focus Area	Existing Zoning	Modeled 2009 Sq Ft	Modeled 2009 DU	Existing GP Modeled 2035 Sq Ft	Existing GP Modeled 2035 DU	GPU 2035 Growth Sq FT	GPU 2035 Growth DU	GPU 2035 Sq Ft to be Modeled	GPU 2035 DU to be Modeled For EIR	**GPU 2035 DU to be Modeled for Traffic & Fiscal**	2009 Students	Existing GP 2035 Modeled Students	GPU 2035 Students	**2009 Total Jobs**	2009 Retail Jobs	2009 Non-Retail Jobs	**Existing GP Modeled 2035 Total Jobs**	Existing GP Modeled 2035 Retail Jobs	Existing GP Modeled 2035 Non-Retail Jobs	**GPU 2035 Total Jobs**	GPU 2035 Retail Jobs	GPU 2035 Non-Retail Jobs	2009 Population	Existing GP Modeled 2035 Population	GPU 2035 Population	Notes
467	Specific Plan	Parks and Open Space		2		147.25																											
467	Specific Plan	Rural Residential		1		46.79		ER-2		0		29				29	29				5	0	5	5	0	5	5	0	5	0	87	87	Elsinore Valley Water
468	Business Park	Business Park			Yes	36.45	D	BP		0	508,700		357,294		357,294						0	0	0	915	0	915	715	0	715				
468	Multiple Use, Area 3	Business Park	62,410		No	9.29	E	MU-3		0		0			62,410						0	0	0	0	0	0	125	0	125				
468	Multiple Use, Area 3	Business Park		2	Yes	28.23	E	MU-3		0	457,300		276,694		276,694	-2	0				0	0	0	823	823	0	553	0	553	0	0	0	
469	Open Space	Parks and Open Space				9.97		OS																									
469	Single-Family 2, Residential	Single Family Residential		198		28.15		SF-2		188		188				198	198													564	564	594	
470	Civic/Institutional	Civic and Institutional	1			1.27																											
470	Community Commercial	Commercial	114,408	1		12.24		CC	114,407		148,800				148,800						205	205	0	267	267	0	267	267	0				
470	Regional Commercial	Commercial	353,967			24.43		RC	354,068		425,100				425,100						637	637	0	765	765	0	765	765	0				
471	Community Commercial	Commercial	138,984	1		13.34		CC	140,082		154,900				154,900						252	252	0	278	278	0	278	278	0				
471	Multi-Family 2, Residential	Multiple Family Residential	241,777	285		19.14		MF-2		396		396				396	396													1,188	1,188	1,188	
471	Single-Family 1, Residential	Single Family Residential		323		58.56		SF-1		323		323				323	323													969	969	969	
472	Single-Family 1, Residential	Single Family Residential		56		10.93		SF-2		56		56				56	56													168	168	168	
473	Open Space	Parks and Open Space				8.16																											
473	Single-Family 1, Residential	Single Family Residential		216		47.93		SF-2		198		198				216	216													594	594	648	
474	Specific Plan	Professional and Office	8,622	8	Yes	27.36	C	MU-1	127,600		540,100		318,528		318,528	-8	0				230	230	0	972	972	0	1,274	0	1,274	0	0	0	
475	Estate Residential 1	Rural Residential		4		106.17		ER-1		3		9				9	9													9	27	27	
475	Open Space	Parks and Open Space				14.50		OS																									
475	Single-Family 1, Residential	Single Family Residential		323		95.56		SF-2		324		390				390	390													972	1,170	1,170	
476	Business Park	Business Park			No	17.94	D	BP	0		256,400				256,400						0	0	0	460	0	460	460	0	460				
476	General Industrial-A	Industrial	15,808	7		47.64		GI-A	14,968		946,400				946,400						13	0	13	852	0	852	852	0	852				
476	General Industrial-A	Industrial				21.48		GI-A	0		0				0						0	0	0	0	0	0	0	0	0				
477	Community Commercial	Commercial	84,191			70.58		CC	88,577		861,000				861,000						159	159	0	1,550	1,550	0	1,550	0	1,550				
478	Rural Residential	Rural Residential	21,000	20		134.30		RR		20		26				26	26													60	78	78	
479	Civic/Institutional	Civic and Institutional	16,085			3.02		C/I							16,085						15	0	15	15	0	15	15	0	15				Fire Station, EMVWD
479	Open Space	Parks and Open Space				0.20		OA																									
479	Single-Family 1, Residential	Single Family Residential		347		56.62		SF-1		347		347				347	347													1,041	1,041	1,041	
480	Civic/Institutional	Civic and Institutional	0			18.83		C/I			614 students							614	614	614													Elementary School
480	Open Space	Parks and Open Space				41.17		OS																									
480	Single-Family 1, Residential	Single Family Residential		333		62.14		SF-1		333		333				333	333													999	999	999	
481	Regional Commercial	Commercial			Yes	18.51	C	RC	0		322,300		244,872		244,872						0	0	0	579	579	0	490	490	0				
481	Specific Plan	Professional and Office	4,032	7	Yes	32.05	C		0	5	562,700	5	373,223		373,223	-7	0				0	0	0	1,013	1,013	0	1,493	0	1,493	15	15	0	
482	Open Space	Parks and Open Space				45.25		OS																									
482	Single-Family 1, Residential	Single Family Residential		308		54.10		SF-1		300		300				308	308													900	900	924	
483	Community Commercial	Commercial	155,008			29.23		CC	155,008		356,100				356,100						279	279	0	641	641	0	641	641	0				
484	Single-Family 1, Residential	Single Family Residential		20		76.81		SF-1		27		132				132	132				10	0	10	10	0	10	10	0	10	81	396	396	Salvation Army/Church (jobs)
485	Business Park	Business Park	383,176		No	29.64	D	BP	0		924,100				383,176						0	0	0	1,663	0	1,663	766	0	766				
485	Business Park	Business Park	11,222		Yes	36.72	D	BP					359,897		371,120						0	0	0	0	0	0	742	0	742				
486	Specific Plan	Civic/Institutional				3.64		SP-CC													5	0	5	5	0	5	5	0	5				Community Center
486	Specific Plan	Parks and Open Space		2		31.93																											
486	Specific Plan	Rural Residential				3.87		ER*		0		63				63	63																
486	Specific Plan	Single Family Residential		683		212.38		SFR*		691		930				930	930													2,073	2,790	2,790	
487	Specific Plan	Professional and Office	6,827	18	Yes	77.28	C	MU-1	0	23	1,219,600	23	899,838		899,838	-23	0				0	0	0	2,195	2,195	0	3,599	0	3,599	69	69	0	
488	Open Space	Parks and Open Space				4.38		OS																									
488	Single-Family 1, Residential	Single Family Residential		379		51.30		SF-1		379		379				379	379													1,137	1,137	1,137	
489	Business Park	Business Park	126,290		No	25.79	D	BP	126,290		510,100				510,100						227	0	227	918	0	918	918	0	918				
489	Business Park	Business Park			Yes	10.58	D	BP					103,713		103,713						0	0	0	0	0	0	207	0	207				
490	Civic/Institutional	Civic and Institutional				263.49		C/I													10	0	10	10	0	10	10	0	10				Rancho Water
490	Open Space	Parks and Open Space				80.84		OS																									
491	Community Commercial	Commercial	5,868	5		37.27		CC	0		454,940				454,940						0	0	0	818	818	0	818	0	818				
492	Civic/Institutional	Civic and Institutional	68,829			61.97		C/I							68,829						50	0	50	50	0	50	50	0	50				Rancho Water
492	General Industrial	Industrial	1,342	1		15.51		BP	0		216,000				216,000						0	0	0	389	0	389	389	0	389				
493	Open Space	Parks and Open Space				20.31		OS																									
493	Parks & Recreation	Parks and Open Space				4.51		P&R																									
493	Single-Family 1, Residential	Single Family Residential		625		103.90		SF-1		624		624				625	625													1,872	1,872	1,875	
494	Open Space	Parks and Open Space		2		8.36		OS																									
494	Single-Family 1, Residential	Single Family Residential		112		25.37		SF-1		112		112				112	112													336	336	336	
495	Business Park	Business Park			Yes	32.37	D	BP	0		451,600		317,276		317,276						0	0	0	813	0	813	635	0	635				
496	Community Commercial	Professional and Office	896	1	Yes	6.51	C	CC	0		28,052		75,753		75,753	-1	0				0	0	0	50	50	0	303	0	303	0	0	0	
496	Open Space	Parks and Open Space				0.34		OS	0		0				0																		
496	Professional Commercial	Professional and Office				2.65		PC	0		47,000				47,000						0	0	0	159	0	159	159	0	159				
496	Specific Plan	Professional and Office	9,070	14	Yes	39.37	C	MU-1	0		419,918		458,415		458,415						0	0	0	756	756	0	1,834	0	1,834				
497	Multiple Use, Area 2	Professional and Office	71,492	4	Yes	38.22	D	MU-2	0	6	533,800	6	445,066		445,066	-6	0				0	0	0	960	0	960	1,780	0	1,780	18	18	0	
498	Civic/Institutional	Civic and Institutional				0.20		C/I													0	0	0	0	0	0							Eastern Water District
498	Multi-Family 2, Residential	Multiple Family Residential		145		7.97		MF-2		144		144				145	145													432	432	435	
498	Professional Commercial	Professional and Office	251,125			19.74		PC	175,900		339,700				339,700						597	0	597	1,154	0	1,154	1,154	0	1,154				
499	Rural Residential	Rural Residential		10	Yes	81.14	B	RR		11		64		41		52	52													33	192	156	
499	Single-Family 1, Residential	Single Family Residential				7.00		SF-1		0		24				24	24													0	72	72	
500	Multi-Family 2, Residential	Multiple Family Residential		177		9.96		MF-2		200		200				200	200													600	600	600	
500	Parks & Recreation	Parks and Open Space				4.29		OS	0		0				0																		
500	Single-Family 1, Residential	Single Family Residential		218		30.88		SF-1		218		218				218	218													654	654	654	
500	Specific Plan	Multiple Family Residential		497	No	22.42	C	MU-1	0	496	390,300	496			0	497	497				0	0	0	702	702	0	0	0	0	1,488	1,488	1,491	
501	General Industrial	Business Park	250,553	1	No	32.00	D	GI	393,059		971,500				393,059	-1	0				354	0	354	874	0	874	786	0	786	0	0	0	
501	General Industrial	Business Park	11,346		Yes	37.64	D	GI					368,892		368,802						0	0	0	0	0	0	738	0	738				
501	Multiple Use, Area 2	Business Park	344,455		No	24.47	D	MU-2	391,648		409,800				409,800						705	0	705	737	0	737	737	0	737				
501	Multiple Use, Area 2	Business Park			Yes	4.85	D	MU-2					47,505		47,505						0	0	0	0	0	0	95	0	95				
502	Multi-Family 2, Residential	Multiple Family Residential		421		22.65		MF-2		420		420				421	421													1,260	1,260	1,263	
502	Open Space	Parks and Open Space				9.48		OS																									
502	Single-Family 1, Residential	Single Family Residential		166		25.22		SF-1		166		166				166	166													498	498	498	
503	Civic/Institutional	Civic and Institutional		1		24.83		CI													10	0	10	10	0	10	10	0	10				Rancho Water
503	General Industrial	Industrial	94,807			14.81		GI	138,935		206,300				206,300						125	0	125	186	0	186	186	0	186				
504	Scenic Highway Comm	Commercial				0.19																											
504	Specific Plan	Commercial				51.08		SP 276	0		1,780,700				1,780,700						0	0	0	4,406	2,003	2,403	4,406	2,003	2,403				
505	Rural Residential	Multiple Family Residential		1	Yes	9.35	B	RR						280		280	280													0	0	841	
505	Rural Residential	Rural Residential		11	Yes	35.69	B	RR		14		18		18		18	18													42	54	54	
505	Specific Plan	Parks and Open Space				2.22			0		0				0																		
505	Specific Plan	Single Family Residential		27		5.74		SF1*		27		27				27	27													81	81	81	

TAZ_ID	Existing General Plan	Preferred LU for GPU 2035	Existing on the Ground Sq Ft (PTAX)	Existing on the Ground DU (PTAX)	GPU 2035 Growth	Acres	Focus Area	Existing Zoning	Modeled 2009 Sq Ft	Modeled 2009 DU	Existing GP Modeled 2035 Sq Ft	Existing GP Modeled 2035 DU	GPU 2035 Growth Sq FT	GPU 2035 Growth DU	GPU 2035 Sq Ft to be Modeled	GPU 2035 DU to be Modeled For EIR	**GPU 2035 DU to be Modeled For Traffic & Fiscal**	2009 Students	Existing GP 2035 Modeled Students	GPU 2035 Students	**2009 Total Jobs**	2009 Retail Jobs	2009 Non-Retail Jobs	**Existing GP Modeled 2035 Total Jobs**	Existing GP Modeled 2035 Retail Jobs	Existing GP Modeled 2035 Non-Retail Jobs	**GPU 2035 Total Jobs**	GPU 2035 Retail Jobs	GPU 2035 Non-Retail Jobs	2009 Population	Existing GP Modeled 2035 Population	GPU 2035 Population	Notes
506	Multiple Use, Area 2	Professional and Office	7,534	7	Yes	39.69	D	MU-2	0	7	553,300	7	462,079		462,079	-7	0				0	0	0	996	0	996	1,848	0	1,848	21	21	0	
507	Community Commercial	Commercial				5.17		CC	0		63,400				63,400						0	0	0	114	114	0	114	114	0				
507	Multiple Use, Area 2	Professional and Office			Yes	29.27	D	MU-2	0		408,400		340,795		340,795						0	0	0	735	0	735	1,363	0	1,363				
508	Civic/Institutional	Civic and Institutional				4.07		SP-C/I			873 students							873	873	873													Elementary School
508	Community Commercial	Commercial				4.13																											
508	Regional Commercial	Commercial				0.82																											
508	Specific Plan	Civic/Institutional				9.62																											
508	Specific Plan	Parks and Open Space				106.13																											
508	Specific Plan	Single Family Residential		511		97.13		SF1*		512		512				512	512													1,536	1,536	1,536	
509	Professional Commercial	Professional and Office	49,499			3.33		PC	261,012		374,600				374,600						888	0	888	1,273	0	1,273	1,273	0	1,273				
509	Regional Commercial	Professional and Office	99,115		No	9.36	C	RC							99,115						0	0	0	0	0	0	396	0	396				
509	Regional Commercial	Professional and Office	18,231		Yes	3.23	C	RC	46,600		426,800		37,638		55,869						84	84	0	768	768	0	223	0	223				
509	Specific Plan	Professional and Office	212,862			18.37		SP							212,862						0	0	0	0	0	0	851	0	851				
509	Specific Plan	Professional and Office			No	11.93	C	SP							0						0	0	0	0	0	0	0	0	0				
510	Business Park	Business Park	5,719	5	Yes	48.40	D	BP	0	4	674,600	0	474,331		474,331	-5	0				0	0	0	1,214	0	1,214	949	0	949	12	0	0	
511	Open Space	Parks and Open Space				2.23		OS																									
511	Single-Family 1, Residential	Single Family Residential		137		22.11		SF-1		137		137				137	137													411	411	411	
512	Civic/Institutional	Civic and Institutional	30,755	1		4.78		BP	30,755		66,900				66,900						10	0	10	120	0	120	120	0	120				Church
512	Community Commercial	Commercial	58,333			7.07		CC	62,052		86,600				86,600						112	112	0	156	156	0	156	156	0				
512	Neighborhood Commercial	Commercial	167,623			11.21		NC	139,617		139,617				139,617						176	176	0	176	176	0	176	176	0				
513	Community Commercial	Commercial	197,279			13.38		CC	191,704		331,700				331,700						345	345	0	597	597	0	597	597	0				
513	Community Commercial	Professional and Office	57,396		Yes	13.85	C	CC	0		0		161,302		218,698						0	0	0	0	0	0	875	0	875				
514	Civic/Institutional	Civic and Institutional				108.64		C/I													10	0	10	10	0	10	10	0	10				Rancho Water District
515	Business Park	Business Park	355,015		No	20.68	D	BP	347,241		334,500				347,241						625	0	625	602	0	602	625	0	625				
515	Business Park	Business Park	2,715		Yes	3.28	D	BP					32,175		34,890						0	0	0	0	0	0	70	0	70				
515	General Industrial	Business Park			No	7.87	D	GI	0		110,100				110,100						0	0	0	99	0	99	99	0	99				
515	Multiple Use, Area 2	Business Park	17,969		No	13.25	D	MU-2	154,248		185,400				185,400						277	0	277	333	0	333	333	0	333				
516	Rural Residential	Multiple Family Residential		2	Yes	14.74	B	RR		2		4		442		442	442													6	12	1,326	
516	Rural Residential	Rural Residential		1	Yes	4.84	B	RR		1		1		2		2	2													3	3	6	
516	Rural Residential	Single Family Residential			Yes	4.74	B	RR		0		0		47		47	47													0	0	141	
517	Multiple Use, Area 2	Professional and Office	22,774	17	Yes	46.89	D	MU-2	0	16	621,600	16	545,930		545,930	-17	0				0	0	0	1,119	0	1,119	2,184	0	2,184	48	48	0	
518	Open Space	Parks and Open Space				0.28		OS																									
518	Single-Family 2, Residential	Single Family Residential		87		14.49		SF-2		88		88				88	88													264	264	264	
519		Commercial				0.39																											
519	Community Commercial	Commercial	300,765			24.04		CC	288,074		292,700				300,765						519	519	0	527	527	0	527	527	0				
520	Community Commercial	Commercial	499,020			29.26		CC	285,223		357,300				357,300						465	465	0	643	643	0	643	643	0				
520	Open Space	Parks and Open Space				6.89		OS																									
521	Business Park	Business Park	366,854	2	No	25.14	D	BP	446,583		503,200				366,854	-2	0				804	0	804	906	0	906	804	0	804	0	0	0	
521	Business Park	Business Park	73,631		Yes	10.92	D	BP					107,032		180,663						0	0	0	0	0	0	361	0	361				
521	Open Space	Business Park			Yes	4.32	D	OS					42,386		42,386						0	0	0	0	0	0	85	0	85				
522	Community Commercial	Commercial	371,926			38.94		CC	386,858		474,400				474,400						696	696	0	853	853	0	853	853	0				
522	Neighborhood Commercial	Commercial	43,549			12.64		NC	43,547		109,700				109,700						78	78	0	197	197	0	197	197	0				
522	Parks & Recreation	Parks and Open Space				9.76		P&R																									
523	Business Park	Single Family Residential		2	Yes	14.48	B	BP	0		202,100			145		147	147				0	0	0	364	0	364	0	0	0	0	0	441	
523	Multi-Family 2, Residential	Multiple Family Residential		123	No	13.21		MF-2		214		214				214	214													642	642	642	
523	Open Space	Parks and Open Space			No	1.85		OS	0		0				0																		
523	Regional Commercial	Commercial	1,400	1	No	6.61		RC	0		113,200				113,200						0	0	0	204	204	0	204	204	0				
523	Rural Residential	Commercial			Yes	5.03	B	RR		0		2	66,546		66,546						0	0	0	0	0	0	133	133	0				
523	Single-Family 2, Residential	Single Family Residential		118	No	11.07		SF-2		118		118				118	118													354	354	354	
524	Regional Commercial	Commercial	461,245			50.01		RC	461,144		871,200				871,200						830	830	0	1,568	1,568	0	1,568	1,568	0				
525	Single-Family 2, Residential	Single Family Residential		140		19.34		SF-2		140		140				140	140													420	420	420	
526	Multiple Use, Area 2	Business Park	113,924	2	Yes	22.53	D	MU-2	114,198	2	313,600	0	220,834		334,758	-2	0				205	0	205	564	0	564	670	0	670	6	0	0	
527	Multiple Use, Area 2	Professional and Office	9,768	11	Yes	44.64	D	MU-2	0	8	592,400	0	519,795		519,795	-11	0				0	0	0	1,066	0	1,066	2,079	0	2,079	24	0	0	
528	Business Park	Professional and Office	1,920	3	Yes	94.54	B	BP	0		1,317,200		1,100,732		1,100,732	-3	0				0	0	0	2,371	0	2,371	4,403	0	4,403	0	0	0	
528	Specific Plan	Parks and Open Space				77.79			0		0				0						0	0	0	0	0	0	0	0	0				
529	Open Space	Parks and Open Space				33.90		OS																									
529	Single-Family 1, Residential	Single Family Residential		479		136.57		SF-1		480		617				617	617													1,440	1,851	1,851	
530	Business Park	Business Park	800,117	13	No	35.23	D	BP	659,271		473,900				800,117	-13	0				1,186	0	1,186	853	0	853	1,600	0	1,600				
530	Multiple Use, Area 2	Business Park	65,942		No	2.21	D	MU-2	30,715		95,832				95,832						18	0	18	55	0	55	55	0	55				
531	Open Space	Parks and Open Space				6.36		OS																									
531	Parks & Recreation	Parks and Open Space				1.58		P&R																									
531	Single-Family 1, Residential	Single Family Residential		430		67.73		SF-1		430		430				430	430													1,290	1,290	1,290	
532	Civic/Institutional	Civic and Institutional	46,366	3		25.98		C/I			748 students							748	748	748													Church, Elementary School
532	Open Space	Parks and Open Space				10.08		OS																									
532	Single-Family 1, Residential	Single Family Residential		280		54.00		SF-1		280		280				280	280													840	840	840	
533	Multiple Use, Area 2	Business Park	121,957		No	15.00	D	MU-2	113,079		309,400				200,236						204	0	204	557	0	557	400	0	400				
533	Multiple Use, Area 2	Business Park			Yes	7.22	D	MU-2					70,800		70,800						0	0	0	0	0	0	142	0	142				
533	Open Space	Business Park			Yes	3.91	D	OS					38,364		38,364						0	0		0	0	0	77	0	77				
534	Multiple Use, Area 2	Business Park	156,859		No	15.11	D	MU-2	291,459		322,000				156,859						525	0	525	580	0	580	314	0	314				
534	Multiple Use, Area 2	Business Park	199,016		Yes	8.00	D	MU-2					78,406		277,422						0	0	0	0	0	0	555	0	555				
534	Open Space	Business Park			Yes	1.58	D	OS					15,491		15,491						0	0	0	0	0	0	31	0	31				
535	Professional Commercial	Professional and Office	2,358	4	Yes	60.61	D	PC	0	73	1,055,900	0	705,713		705,713	-4	0				0	0	0	3,589	0	3,589	2,823	0	2,823	219	0	0	
536	Community Commercial	Commercial	23,289			3.40		CC	0		69,500				69,500						0	0	0	125	125	0	139	139	0				
536	Community Commercial	Commercial				2.32		CC	0		0				0																		
536	Professional Commercial	Professional and Office	1			2.17		PC	0		0				0																		
536	Professional Commercial	Professional and Office	5,128			10.84		PC	0		0				0																		
536	Professional Commercial	Professional and Office			Yes	28.64	D	PC	0		726,500		333,485		333,485						0	0	0	2,469	0	2,469	1,334	0	1,334				
536	Single-Family 2, Residential	Single Family Residential				13.75		SF-2		0		0					0																
537	Business Park	Business Park	20,363			0.62		BP							0																		
537	Business Park	Commercial			Yes	15.01	B	BP	179,600		199,300		198,609		198,609						323	0	323	358	0	358	397	397	0				
537	Regional Commercial	Commercial	43,295			31.41		RC	61,049		569,700				569,700						110	110	0	1,025	1,025	0	1,139	1,139	0				
537	Regional Commercial	Commercial	20,363			0.00		RC	0		0																						
538	Open Space	Parks and Open Space				4.79		OS																									
538	Single-Family 1, Residential	Single Family Residential		241		42.29		SF-1		240		240				241	241													720	720	723	
539	Open Space	Parks and Open Space				13.69		OS																									
539	Parks & Recreation	Parks and Open Space				8.53		P&R																									
539	Single-Family 1, Residential	Single Family Residential		266		55.78		SF-1		256		256				266	266													768	768	798	
540	Regional Commercial	Commercial				2.18		RC	0		34,800				34,800						0	0	0	62	62	0	62	62	0				
540	Specific Plan	Single Family Residential		289		50.74		SF2*		289		289				289	289													867	867	867	
541	Multiple Use, Area 2	Business Park	367,912	1	No	23.75	D	MU-2	344,356		381,900				381,900	-1	0				619	0	619	687	0	687	687	0	687	0	0	0	
541	Multiple Use, Area 2	Business Park			Yes	3.61	D	MU-2					35,425		35,425						0	0	0	0	0	0	71	0	71				
542	Civic/Institutional	Civic and Institutional				13.55		C/I			693 students							693	693	693													Elementary School
542	Single-Family 1, Residential	Single Family Residential		260		51.26		SF-1		261		261				261	261													783	783	783	

TAZ_ID	Existing General Plan	Preferred LU for GPU 2035	Existing on the Ground Sq Ft (PTAX)	Existing on the Ground DU (PTAX)	GPU 2035 Growth	Acres	Focus Area	Existing Zoning	Modeled 2009 Sq Ft	Modeled 2009 DU	Existing GP Modeled 2035 Sq Ft	Existing GP Modeled 2035 DU	GPU 2035 Growth Sq FT	GPU 2035 Growth DU	GPU 2035 Sq Ft to be Modeled	GPU 2035 DU to be Modeled For EIR	**GPU 2035 DU to be Modeled For Traffic & Fiscal**	2009 Students	Existing GP 2035 Modeled Students	GPU 2035 Students	**2009 Total Jobs**	2009 Retail Jobs	2009 Non-Retail Jobs	**Existing GP Modeled 2035 Total Jobs**	Existing GP Modeled 2035 Retail Jobs	Existing GP Modeled 2035 Non-Retail Jobs	**GPU 2035 Total Jobs**	GPU 2035 Retail Jobs	GPU 2035 Non-Retail Jobs	2009 Population	Existing GP Modeled 2035 Population	GPU 2035 Population	Notes
543	Open Space	Parks and Open Space				5.25		OS																						0	0	0	
543	Single-Family 1, Residential	Single Family Residential		169		30.40		SF-1		169		169				169	169													507	507	507	
544	Business Park	Commercial			Yes	36.53	A	BP	0		508,700		483,335		483,335						0	0	0	916	0	916	967	967	0	0	0	0	
544	Community Commercial	Commercial				30.95		CC	0		635,400				635,400						0	0	0	1,143	1,143	0	1,143	1,143	0	0	0	0	
544	Community Commercial	Commercial			Yes	19.09	A	CC	0		0		252,617		252,617						0	0	0	0	0	0	505	505	0	0	0	0	
544	Multi-Family 2, Residential	Multiple Family Residential				12.00		MF-2		0		166				166	166													0	498	498	
545	Multiple Use, Area 2	Business Park	226,219		No	20.66	D	MU-2	299,503		497,600				299,503						539	0	539	896	0	896	539	0	539	0	0	0	
545	Multiple Use, Area 2	Business Park	73,305		Yes	20.13	D	MU-2					197,252		270,557						0	0	0	0	0	0	541	0	541	0	0	0	
546	Open Space	Parks and Open Space				5.15		OS																						0	0	0	
546	Single-Family 1, Residential	Single Family Residential		306		54.30		SF-1		297		297				306	306													891	891	918	
547	Civic/Institutional	Civic and Institutional				0.49		C/I													15	0	15	15	0	15	15	0	15	0	0	0	Fire Station
547	Neighborhood Commercial	Commercial	87,343	1		9.61		NC	56,267		76,600				87,343						101	101	0	138	138	0	175	175	0	0	0	0	
547	Parks & Recreation	Parks and Open Space				3.32		P&R																						0	0	0	
548	Specific Plan	Civic/Institutional				10.15		C/I		650 students								650	650	650													School Site
548	Specific Plan	Multiple Family Residential				19.06		MF2*		0		313				313	313													0	939	939	
548	Specific Plan	Parks and Open Space				43.21																											
549	Business Park	Commercial	2,417	3	Yes	20.42	A	BP					270,160		270,160	-3	0				0	0	0	0	0	0	540	540	0	0	0	0	
549	Business Park	Professional and Office	11,012	1	Yes	43.46	A	BP	0	0	676,000	0	505,983		505,983	-1	0				0	0	0	1,217	0	1,217	2,024	0	2,024	0	0	0	
550	Specific Plan	Business Park				37.12		MU-2	0	0	517,100	0			517,100						0	0	0	931	0	931	931	0	931				
551	Multiple Use, Area 2	Professional and Office	2,320	4	Yes	37.14	A	MU-2	0		503,200		432,410		432,410						0	0	0	906	0	906	1,730	0	1,730				
552	Multi-Family 2, Residential	Multiple Family Residential		394		35.03		MF-2		512		602				602	602													1,536	1,806	1,806	
553	Specific Plan	Business Park				5.95		MU-2	0		82,241				82,241						0	0	0	148	0	148	148	0	148				
553	Specific Plan	Multiple Family Residential		351		14.06		MF2*		353		353				353	353													1,059	1,059	1,059	
554	Business Park	Professional and Office	1,281	3	Yes	23.78	A	BP	0		685,800		276,845		276,845	-3	0				0	0	0	1,234	0	1,234	1,107	0	1,107				
554	Specific Plan	Civic/Institutional				4.16		SP-C/I	0		0										15	0	15	15	0	15	15	0	15				
554	Specific Plan	Professional and Office			Yes	1.14	A	SP	0		43,500		13,320		13,320						0	0	0	118	0	118	53	0	53				
555	Multiple Use, Area 2	Parks and Open Space			No	25.25	A	MU-2																									
555	Multiple Use, Area 2	Professional and Office	6,360	8	Yes	56.99	A	MU-2	0	10	1,109,500	30	663,559		663,559	-8	0				0	0	0	1,997	0	1,997	2,654	0	2,654	30	90	0	
556	Multiple Use, Area 2	Business Park		1		2.28		MU-2	0		0				0																		
556	Multiple Use, Area 2	Commercial		1	Yes	48.39	A	MU-2	0		705,300		640,217		640,217	-1	0				0	0	0	1,269	0	1,269	1,280	1,280	0	0	0	0	
556	Regional Commercial	Commercial	231,467			21.66		RC	253,702		393,700				393,700						456	456	0	708	708	0	708	0	708				
557	Specific Plan	Business Park				28.46		ORP?	0	0	930,400	0			930,400						0	0	0	3,163	0	3,163	3,163	0	3,163				
557	Multiple Use, Area 2	Business Park						MU-2	0	0	6,969	0			6,959						0	0	0	12	0	12	12	0	12				
558	Civic/Institutional	Civic and Institutional				0.71																											
558	Open Space	Parks and Open Space				9.15																											
558	Rural Residential	Rural Residential		2		36.69		RR		2		20				20	20													6	60	60	
558	Single-Family 1, Residential	Single Family Residential		1		18.69		SF-1		0		65				65	65													0	195	195	
558	Specific Plan	Parks and Open Space				104.56		P & R /C/I													35	0	35	35	0	35	35	0	35				Sports Park
559	Civic/Institutional	Civic and Institutional				67.65		C/I		3592 students								3,592	3,592	3,592													Murrieta Mesa High School
560	Rural Residential	Rural Residential		37		114.33		RR		35		35				37	37													105	105	111	
561	Single-Family 1, Residential	Single Family Residential		215		44.80		SF-1		215		215				215	215													645	645	645	
562	Specific Plan	Parks and Open Space				88.44		P & R													26	0	26	26	0	26	26	0	26				Sports Park
563	Single-Family 1, Residential	Single Family Residential		500		127.13		SF-1		502		615				615	615													1,506	1,845	1,845	
564	Open Space	Parks and Open Space			Yes	6.00		OS																									
564	Parks & Recreation	Parks and Open Space			Yes	25.60		P&R																									
564	Single-Family 1, Residential	Single Family Residential		305	Yes	59.43		SF-1		268		268				305	305													804	804	915	
565	Business Park	Commercial			Yes	2.19	A	BP	0		50,100		28,931		28,931						0	0	0	90	0	90	58	58	0				
565	Multiple Use, Area 3	Multiple Family Residential		484	No	64.67	E	MU-2	0	451	811,000	451				484	484				0	0	0	1,460	1,460	0	0	0	0	1,353	1,353	1,452	
566	Multi-Family 2, Residential	Multiple Family Residential		161		11.23		MF-2		180		180				180	180													540	540	540	
566	Parks & Recreation	Parks and Open Space				14.60		P&R																									
566	Professional Commercial	Professional and Office	140,097			4.85		PC	53,431		83,600				83,600						181	0	181	284	0	284	284	0	284				
567	Business Park	Professional and Office	600	1	Yes	17.00	A	BP	0		419,500		197,948		197,948	-1	0				0	0	0	755	0	755	792	0	792	0	0	0	
568	Single-Family 1, Residential	Professional and Office		5	Yes	63.70	A	SF-1		5		120	741,687		741,687	-5	0				0	0	0	0	0	0	2,967	0	2,967	15	360	0	
568	Multiple Use 2	Professional and Office			Yes		A	MU-2	0		30,900										0	0	0	45	0	45	0	0	0				
569	Specific Plan	Parks and Open Space				17.70																											
569	Specific Plan	Single Family Residential		238		49.32		SF2*		238		238				238	238													714	714	714	
570	Business Park	Professional and Office			Yes	55.89	A	BP	0		433,500		650,708		650,708						0	0	0	780	0	780	2,603	0	2,603				
571	Specific Plan	Business Park				4.74		BP	0		9,757				9,757						0	0	0	17	0	17	17	0	17				
571	Multiple Use 2	Business Park						MU-2	0		58,500				58,500						0	0	0	105	0	105	105	0	105				
571	Specific Plan	Parks and Open Space				1.17																											
571	Specific Plan	Single Family Residential				22.01		RS6*		0		76				76	76													0	228	228	
572	Multiple Use, Area 2	Professional and Office	1,568	1	Yes	5.50	A	MU-2	0		86,400		64,001		64,001	-1	0				0	0	0	155	0	155	256	0	256	0	0	0	
572	Single-Family 1, Residential	Professional and Office		1	Yes	9.63	A	SF-1	0	0	0	0	112,112		112,112	-1	0				0	0	0	0	0	0	448	0	448	0	0	0	
572	Single-Family 1, Residential	Single Family Residential		114		22.18		SF-1		112		132				132	132													336	396	396	
573	Open Space	Parks and Open Space				8.62		OS																									
573	Single-Family 1, Residential	Single Family Residential		202		32.44		SF-1		202		202				202	202													606	606	606	
574	Rural Residential	Rural Residential		21		203.34		RR		23		45				45	45													69	135	135	
575	Community Commercial	Commercial	92,790			12.37		CC	89,806		151,240				151,240						161	161	0	272	272	0	272	272	0				
575	Single-Family 2, Residential	Single Family Residential		332		39.98		SF-2		332		332				332	332													996	996	996	
576	Single-Family 1, Residential	Single Family Residential		301		59.45		SF-1		317		317				317	317													951	951	951	
578	Civic/Institutional	Civic and Institutional				10.69		C/I		1075 students								1,075	1,075	1,075													Elementary School
578	Open Space	Parks and Open Space				0.07		OS																									
578	Parks & Recreation	Parks and Open Space				3.79		P&R																									
578	Single-Family 1, Residential	Single Family Residential		287		49.32		SF-1		292		292				292	292													876	876	876	
579	Specific Plan	Civic/Institutional	145,737			13.38		C/I		600 students								600	600	600													Elementary School
579	Specific Plan	Parks and Open Space				14.22																											
579	Specific Plan	Single Family Residential		288		58.54		*SF1		288		288				288	288													864	864	864	
580	Estate Residential 1	Professional and Office			Yes	18.83	A	ER-1					219,299		219,299						0	0	0	0	0	0	877	0	877				
580	Rural Residential	Professional and Office	28,325	24	Yes	123.24	A	RR		24		31	1,434,930		1,434,930	-24	0				0	0	0	0	0	0	5,740	0	5,740	72	93	0	
581	Rural Residential	Rural Residential		7		149.40		RR		7		14				14	14													21	42	42	
582	Estate Residential 1	Professional and Office			Yes	19.38	A			0		13	225,686		225,686						0	0	0	0	0	0	903	0	903				
582	Rural Residential	Professional and Office	24,798	19	Yes	130.18	A			18		29	1,515,710		1,515,710	-19	0				0	0	0	0	0	0	6,063	0	6,063	54	87	0	
583	Specific Plan	Parks and Open Space	552			5.96									552																		
583	Specific Plan	Civic/Institutional				3.03		C/I*	0		0										5	0	5	5	0	5	5	0	5				
583	Specific Plan	Parks and Open Space	552			2.48									552																		

TAZ_ID	Existing General Plan	Preferred LU for GPU 2035	Existing on the Ground Sq Ft (PTAX)	Existing on the Ground DU (PTAX)	GPU 2035 Growth	Acres	Focus Area	Existing Zoning	Modeled 2009 Sq Ft	Modeled 2009 DU	Existing GP Modeled 2035 Sq Ft	Existing GP Modeled 2035 DU	GPU 2035 Growth Sq FT	GPU 2035 Growth DU	GPU 2035 Sq Ft to be Modeled	GPU 2035 DU to be Modeled For EIR	**GPU 2035 DU to be Modeled For Traffic & Fiscal**	2009 Students	Existing GP 2035 Modeled Students	GPU 2035 Students	**2009 Total Jobs**	2009 Retail Jobs	2009 Non-Retail Jobs	**Existing GP Modeled 2035 Total Jobs**	Existing GP Modeled 2035 Retail Jobs	Existing GP Modeled 2035 Non-Retail Jobs	**GPU 2035 Total Jobs**	GPU 2035 Retail Jobs	GPU 2035 Non-Retail Jobs	2009 Population	Existing GP Modeled 2035 Population	GPU 2035 Population	Notes
583	Specific Plan	Single Family Residential	552			62.87		RS8*		0		115				115	115													0	345	345	
583	Specific Plan	Single Family Residential						RS7*		0		105				105	105													0	315	315	
584	Single-Family 1, Residential	Professional and Office		2	Yes	58.50	A	SF-1	0	0	0	59	681,195		681,195	-2	0				0	0	0	0	0	0	2,725	0	2,725	0	177	0	
584	Specific Plan	Parks and Open Space				48.89		SP	0		0				0																		
584	Specific Plan	Single Family Residential				52.06		SP-RS6*		0		15				15	15													0	45	45	
584	Specific Plan							SP-RS7.5*	0	0		7				7	7													0	21	21	
584	Specific Plan							SP-RS8*		0		30				30	30													0	90	90	
585	Rural Residential	Rural Residential		28		194.34		RR		24		41				41	41													72	123	123	
586	Civic/Institutional	Civic and Institutional				41.35		C/I			550 students							550	550	550													Calvary Chapel Bible College
586	Civic/Institutional	Civic and Institutional						C/I	503,727		503,727				503,727						100	0	100	906	0	906	906	0	906				and Conference Center
586	Multi-Family 1, Residential	Multiple Family Residential		73		17.90		MF-1		140		140				140	140													420	420	420	
587	Single-Family 1, Residential	Single Family Residential				0.01																											
587	Single-Family 1, Residential	Single Family Residential		96		26.44		SF-1		96		126				126	126													288	378	378	
587	Specific Plan	Single Family Residential		98		24.82		SF2*		0		186				186	186													0	558	558	
588	Estate Residential 1	Rural Residential		1		12.08		ER-1		0		8				8	8													0	24	24	
588	Estate Residential 3	Single Family Residential		3		29.72		ER-3		0		73				73	73													0	219	219	
588	Open Space	Parks and Open Space				108.95		OS																									
588	Open Space	Parks and Open Space				31.66		OS																									
589	Private Recreation	Parks and Open Space				9.66		PR																									
589	Single-Family 1, Residential	Single Family Residential		1101		135.80		SF-1		1,112		1,112				1,112	1,112													3,336	3,336	3,336	
590	Community Commercial	Commercial	94,367			12.68		CC	94,457		153,600				153,600						170	170	0	276	276	0	276	0	276				
590	Single-Family 2, Residential	Single Family Residential		134		13.40		SF-2		140		140				140	140													420	420	420	
591	Neighborhood Commercial	Commercial	85,167			11.23		NC	89,837		94,900				94,900						161	161	0	171	171	0	171	0	171				
591	Open Space	Parks and Open Space				0.19		OS																									
591	Single-Family 1, Residential	Single Family Residential		272		46.41		SF-1		272		272				272	272													816	816	816	
591	Single-Family 2, Residential	Single Family Residential		44		9.26		SF-2		62		65				65	65													186	195	195	
592	Specific Plan	Single Family Residential		417		84.31		SF2*		418		418				418	418													1,254	1,254	1,254	
593	Multi-Family 1, Residential	Multiple Family Residential		455		24.84		MF-1		0		439				455	455													0	1,317	1,365	
593	Multi-Family 2, Residential	Multiple Family Residential				10.13		MF-2		0		166				166	166													0	498	498	
593	Professional Commercial	Professional and Office	2,040			0.71		PC	0		12,200				12,200						0	0	0	42	0	42	42	0	42				
594	Civic/Institutional	Civic and Institutional				2.33		C/I													5	0	5	5	0	5	5	0	5				Eastern Water District
594	Open Space	Parks and Open Space				13.52		OS																									
594	Single-Family 1, Residential	Single Family Residential		350		67.49		SF-1		350		350				350	350													1,050	1,050	1,050	
598	Civic/Institutional	Civic and Institutional				23.21		C/I			1387 students							1,387	1,387	1,387													Warm Springs Middle School
598	Community Commercial	Commercial				19.72		CC	0		240,200				240,200						0	0	0	432	432	0	432	432	0				
598	Neighborhood Commercial	Commercial				2.65		NC	0		23,500				23,500						0	0	0	42	42	0	42	42	0				
598	Parks & Recreation	Parks and Open Space				8.73		P&R																									
599	Open Space	Parks and Open Space				0.15																											
599	Single-Family 1, Residential	Single Family Residential		356		61.83		SF-1		356		364				364	364													1,068	1,092	1,092	
600	Rural Residential	Rural Residential		14		227.61		RR		10		52				52	52													30	156	156	
600	Civic/Institutional	Civic and Institutional				2.79																											
601	Multi-Family 1, Residential	Multiple Family Residential		85		19.95		MF-1		160		160				160	160													480	480	480	
601	Multi-Family 2, Residential	Multiple Family Residential		346		21.39		MF-2		328		328				346	346													984	984	1,038	
601	Open Space	Parks and Open Space				3.56		OS																									
601	Private Recreation	Parks and Open Space				104.70		P&R																									
601	Single-Family 2, Residential	Single Family Residential		340		64.90		SF-2		340		340				340	340													1,020	1,020	1,020	
602	Specific Plan	Parks and Open Space				8.67																											
602	Specific Plan	Civic/Institutional				12.30		C/I			835 students							835	835	835													
602	Specific Plan	Commercial				9.71		CC	0		118,300				118,300						0	0	0	213	213	0	213	213	0				
602	Specific Plan	Parks and Open Space				236.82																											
602	Specific Plan	Single Family Residential		766		375.36		SF1		768		1,630				1,630	1,630													2,304	4,890	4,890	
603	Open Space	Parks and Open Space				0.04		OS																									
603	Private Recreation	Parks and Open Space		1		14.76		PR																									
603	Single-Family 1, Residential	Single Family Residential		275		165.61		SF-1		276		276				275	275													828	828	825	
603	Single-Family 2, Residential	Single Family Residential		243		34.68		SF-2		243		243				243	243													729	729	729	
604	Community Commercial	Commercial	9,474			6.88		CC	14,600		84,100				84,100						26	26	0	151	151	0	151	151	0				
604	Multiple Use, Area 3	Multiple Family Residential		178	Yes	11.70	E	MU-3	0	176	137,800	176		351		351	351				0	0	0	248	248	0	0	0	0	528	528	1,053	
604	Neighborhood Commercial	Commercial	7,625			10.30		NC	9,583		88,800				88,800						17	17	0	159	159	0	159	159	0				
605	Specific Plan	Single Family Residential				0.07																								0	0	0	
606	Open Space	Parks and Open Space				2.48		OS																									
606	Parks & Recreation	Parks and Open Space				12.97		P&R																									
606	Single-Family 1, Residential	Single Family Residential		499		93.99		SF-1		501		501				501	501													1,503	1,503	1,503	
608	Neighborhood Commercial	Commercial	58,738			4.86		NC	57,384		42,700				58,738						104	104	0	77	77	0	117	117	0				
608	Open Space	Parks and Open Space				1.54																											
608	Parks & Recreation	Parks and Open Space				0.70																											
608	Single-Family 2, Residential	Single Family Residential		408		55.43		SF-2		408		408				408	408													1,224	1,224	1,224	
610	Business Park	Business Park			Yes - HE	8.59		BP	0		400,000				120,000						0	0	0	720	0	720	240	0	240				
610	Business Park	Multiple Family Residential			Yes - HE	15.02		BP	0	0	0	0		451		451	451													0	0	1,353	
610	Regional Commercial	Commercial				4.03		RC	0		71,400				71,400						0	0	0	128	128	0	128	0	128				
610	Rural Residential	Commercial				11.90		RR	0	0	0	0	157,453		157,453						0	0	0	0	0	0	315	315	0				
610	Rural Residential	Rural Residential		26		215.53		RR		27		51				51	51													81	153	153	
611	Business Park	Business Park			Yes-HE	52.51		BP	0	1	913,000	0			693,880						0	0	0	1,738	0	1,738	1,388	0	1,388				
611	Business Park	Multiple Family Residential			Yes-HE	16.74		BP						502		502	502													0	0	1,506	
611	Rural Residential	Rural Residential				47.75		RR		0		11				11	11													0	33	33	
611	Single-Family 1, Residential	Single Family Residential				12.91		SF-1		0		45				45	45													0	135	135	
618	Regional Commercial	Commercial				68.09		RC	0		965,900				965,900						0	0	0	2,052	2,052	0	2,052	2,052	0				
618	Rural Residential	Rural Residential				14.03		RR		0		3				3	3													0	9	9	
			13,978,895	**33,750**				**TOTALS**	**11,286,151**	**33,752**	**49,073,504**	**40,845**	**22,346,411**	**3,897**	**50,189,652**	**44,241**	**44,484**	**23,109**	**25,509**	**25,509**	**19,888**	**10,968**	**8,920**	**93,390**	**38,972**	**54,418**	**130,153**	**31,633**	**98,521**	**101,253**	**122,301**	**133,261**	
																					19,888			93,390			130,154						

is Area Codes
A - NORTH MURRIETA BUSINESS CORRIDOR
B - CLINTON KEITH/MITCHELL
C - GOLDEN TRIANGLE NORTH
D - SOUTH MURRIETA BUSINESS CORRIDOR
E - MULITPLE USE AREA 3 (MU-3)